FILED
APR 20 1943
CHARLES ELMORE CROPLEY
CLERK

IN THE

Supreme Court of the United States

OCTOBER TERM, 1942

No. 945-946 & 989

FORD MOTOR COMPANY,
Petitioner,

vs.

THE GORDON FORM LATHE COMPANY,
Respondent.

Transcript of Record

On Petition for Writ of Certiorari to the United States Circuit Court of Appeals for the Sixth Circuit

VOLUME I.

Trial Papers, Plaintiff's Record and Part of Defendant's Record.

I. Joseph Farley,
1664 National Bank Bldg.,
Detroit, Michigan,
Cooper, Kerr & Dunham,
Woolworth Bldg., 233 Broadway,
New York, New York,
Attorneys for Petitioner.

Lecher, Michael, Whyte & Spohn,
110 East Wisconsin Ave., Milwaukee, Wisconsin,
Richey & Watts,
Union Commerce Bldg., Cleveland, Ohio,
Swan, Frye & Hardesty,
Ford Bldg., Detroit, Michigan,
Attorneys for Respondent.

No. .....

United States Circuit Court of Appeals

FOR THE SIXTH CIRCUIT.

THE GORDON FORM LATHE COMPANY,
Plaintiff-Appellant and Cross-Appellee,

vs.

FORD MOTOR COMPANY,
Defendant-Appellee and Cross-Appellant.

EQUITY No. 4564.

APPEAL FROM
THE DISTRICT COURT OF THE UNITED STATES,
EASTERN DISTRICT OF MICHIGAN,
SOUTHERN DIVISION.

TRANSCRIPT OF RECORD.

VOLUME I.

Trial Papers, Plaintiff's Record and Part of Defendant's Record.

LECHER, MICHAEL, WHYTE & SPOHN,
110 East Wisconsin Ave., Milwaukee, Wisconsin,

RICHEY & WATTS,
Union Commerce Bldg., Cleveland, Ohio,

SWAN, FRYE & HARDESTY,
Ford Bldg., Detroit, Michigan,
Attorneys for Plaintiff-Appellant and Cross-Appellee.

BODMAN, LONGLEY, BOGLE, MIDDLETON & FARLEY,
1400 Buhl Bldg., Detroit, Michigan,

COOPER, KERR & DUNHAM,
Woolworth Bldg., 233 Broadway,
New York, New York,
Attorneys for Defendant-Appellee and Cross-Appellant.

INDEX.

VOLUME I.

Trial Papers, Plaintiff's Record and Part of Defendant's Record.

Caption 1

Decree on Mandate 2

Report of Special Master 4

I. Nature of Invention and History of Litigation and of Defendant's Use of Machinery 5

II. Claims of Parties 9

III. Accounting Period, and Production of Shafts on Infringing Machines: Question of Notice 11

A. Beginning of Period 11

B. Production of Camshafts and End of Accounting Period 15

IV. Profits 17

A. Profits from Infringement 18

1. Standard of Comparison 18

a. Standard for Model A Shaft 21

(1) Pioch and Modified Walcott Machines 21

(2) Westinghouse Lathe 24

(3) Ford Cam Shaper 28

b. Standard for Tractor Shaft 34

c. Effect of Choice of Incorrect Standard ... 35

2. Savings from Use of Infringing Machines ... 36

a. Savings or Loss in Other Operations: Straightening 40

b. Savings in Cam-Roughing Operation 42

(1) Direct Labor Savings 42

(a) Speeds of Production on Model T Shaft 43

(b) Speeds of Production on Model A Shaft 44

(c) Speeds of Production on Tractor Shaft 46

(2) Other Savings: Overhead or Burden 47

(3) Offset of Loss from Scrapping Shapers 59

3. Apportionment of Profits..... 60

V. Damages: Reasonable Royalty..... 71

A. Conditions to Assessment of Reasonable Royalty 73

B. Amount of Royalty..... 74

VI. Questions of Clean Hands and of Increase of Recovery 81

A. Clean Hands 81

B. Increase of Recovery..... 84

VIII. Interest 93

Schedule A. Production of Camshafts on Infringing Machines 94

Schedule B. Proration of Production on Camshafts between Pioch and Walcott Machines, May 14, 1930 to March 15, 1931, inclusive..... 97

Schedule C. Comparative Costs on Cam-Roughing Operation with Walcott Lathes and Standards of Comparison 99

Clerk's Notice of the Filing of the Master's Report..... 101

Plaintiff's Objections to Master's Report..... 101

Exceptions of Defendant to the Report of the Special Master 103

Motion for Action Upon Master's Report and Objections Thereto 111

Affidavit of Todd L. Moise..... 111

Schedule I 115
Schedule II 115
Schedule III 115
Schedule IV 115
Notice of Motion for Action Upon Master's Report..... 117
Opinion of the Hon. Arthur J. Tuttle, District Judge, on the Objections to the Master's Report..... 118
Master's Order for Statement of Account, dated July 6, 1937 132
Exhibit A—Defendant's Statement of Account, filed September 27, 1937 138
Exhibit 7. Operation Sheet No. 1..... 151
Operation Sheet No. 2..... 152
Operation Sheet No. 3..... 153
Operation Sheet No. 4..... 154
Operation Sheet No. 5..... 155
Exhibit 10. Material Price Card No. 1..... 156
Material Price Card No. 2..... 157
Exhibit 11. Computation of Certain Items of Cost of Gordon Lathe Operation on Tractor Camshafts 158
Exhibit 12. Computation of Certain Costs Involved in Rough Grinding Operation on Tractor Camshafts by Landis 10 x 36 Grinders during Period July 1, 1925 to January 1, 1928..... 160
Exhibit B—Amendment to Defendant's Statement of Account, verified December 31, 1937..... 161
Ptf. Rec. Vol. III beginning line 18, page 29 of Typewritten Transcript (Mr. Spohn)..... 166
Master's Order for Statement of Account, dated October 29, 1937 169
Exhibit C—Defendant's Further Statement of Account, dated December 31, 1937..... 171
Ptf. Rec. Vol. III from page 34, line 26 to page 37, line 3 inclusive of Typewritten Transcript (Mr. Spohn).. 193

TRANSCRIPT OF TESTIMONY

(Designated by both Plaintiff and Defendant).

Appearances 195

PLAINTIFF'S RECORD.

FRED M. HOVIS (Defendant's Witness):

Cross Examination by Mr. Spohn..... 195
Cross Examination by Mr. Farley..... 208
Re-Cross Examination by Mr. Spohn..... 212
Re-Cross Examination by Mr. Farley..... 214
Re-Cross Examination by Mr. Spohn..... 216

HAROLD M. WOEHRLE (Defendant's Witness):

Cross Examination by Mr. Spohn..... 216
Re-Cross Examination by Mr. Spohn..... 220
Cross Examination by Mr. Spohn..... 227
Re-Direct Examination by Mr. Farley..... 239
Re-Cross Examination by Mr. Spohn..... 242
Re-Direct Examination by Mr. Farley..... 244

FRED M. HOVIS (Recalled):

Cross Examination by Mr. Spohn..... 244

HAROLD M. WOEHRLE (Recalled):

Cross Examination by Mr. Spohn..... 246
Cross Examination by Mr. Farley..... 249

NORMAN R. SCOVILL (Defendant's Witness):

Direct Examination by Mr. Farley..... 253
Cross Examination by Mr. Spohn..... 254

TODD L. MOISE (Plaintiff's Witness):

Direct Examination by Mr. Spohn..... 255
Cross Examination by Mr. Farley..... 258
Re-Direct Examination by Mr. Spohn..... 273
Re-Cross Examination by Mr. Farley..... 274

CHARLES GORDON (Plaintiff's Witness):
Direct Examination by Mr. Spohn..... 275
Cross Examination by Mr. Farley..... 280
Re-Direct Examination by Mr. Spohn..... 282
Cross Examination by Mr. Farley..... 283

LYLE E. BROUGHTON (Plaintiff's Witness):
Direct* Examination by Mr. Spohn..... 291

HOWARD JONES (Plaintiff's Witness):
Direct Examination by Mr. Spohn..... 296
Cross Examination by Mr. Farley..... 300
Re-Direct Examination by Mr. Spohn..... 302
Re-Cross Examination by Mr. Farley..... 303

MILES G. SLONIKER (Plaintiff's Witness):
Direct Examination by Mr. Spohn..... 304
Cross Examination by Mr. Farley..... 308

DEFENDANT'S RECORD.

CHARLES GORDON (Plaintiff's Witness):
Cross Examination by Mr. Farley..... 312

TODD L. MOISE (Recalled) (Plaintiff's Witness):
Cross Examination by Mr. Farley..... 423

---

* The Examination of Lyle E. Broughton by Mr. Spohn, appearing on page 291, was incorrectly stated in the Typewritten Transcript. It should be "Direct" instead of "Cross."

VOLUME II.

Defendant's Record (Continued).

MORRIS E. SHAWKEY (Defendant's Witness):
Direct Examination by Mr. Farley..... 427

SPENCER W. LIBBY (Defendant's Witness):
Direct Examination by Mr. Farley..... 436
Cross Examination by Mr. Spohn..... 444
Re-Direct Examination by Mr. Farley..... 454
Re-Cross Examination by Mr. Spohn..... 457

MORRIS E. SHAWKEY (Recalled) (Defendant's Witness):
Direct Examination by Mr. Farley..... 461

MIKE KLOPSIC (Defendant's Witness):
Direct Examination by Mr. Farley..... 464

RALPH T. MYERS (Defendant's Witness):
Direct Examination by Mr. Farley..... 481

VICTOR F. MARENTETTE (Defendant's Witness):
Direct Examination by Mr. Farley..... 486
Cross Examination by Mr. Spohn..... 493

A. M. WIBEL (Defendant's Witness):
Re-Direct Examination by Mr. Farley..... 495

CHARLES GORDON (Plaintiff's Witness):
Cross Examination by Mr. Farley..... 511

THEODORE R. DAHL (Defendant's Witness):
Direct Examination by Mr. Farley..... 512

GEORGE W. SMITH, JR. (Defendant's Witness):
Direct Examination by Mr. Farley..... 526

ALBERT APTEKAR (Defendant's Witness):
Direct Examination by Mr. Farley..... 529
Cross Examination by Mr. Michael..... 545
Re-Direct Examination by Mr. Farley..... 559

WILLIAM D. HUNT (Defendant's Witness):
Direct Examination by Mr. Farley..... 559
Cross Examination by Mr. Spohn..... 564
Re-Direct Examination by Mr. Farley..... 567
Re-Cross Examination by Mr. Spohn..... 567
Re-Direct Examination by Mr. Farley..... 567

HENRY G. PILLINGER (Defendant's Witness):
Direct Examination by Mr. Farley..... 568
Cross Examination by Mr. Spohn..... 579
Re-Direct Examination by Mr. Farley..... 585
Re-Cross Examination by Mr. Spohn..... 586

JOHN L. SCHMIDT (Defendant's Witness):
Direct Examination by Mr. Farley..... 588
Cross Examination by Mr. Spohn..... 605

RUDY EHRHARD HERKLOTZ (Defendant's Witness):
Direct Examination by Mr. Farley..... 606

WILLIAM F. PIOCH (Defendant's Witness):
Direct Examination by Mr. Farley..... 632
Cross Examination by Mr. Michael..... 663
Re-Direct Examination by Mr. Farley..... 697
Re-Cross Examination by Mr. Michael..... 722
Re-Direct Examination by Mr. Farley..... 727

NIELS BOESEN (Defendant's Witness):
Direct Examination by Mr. Farley..... 728

ALANSON P. BRUSH (Defendant's Witness):
Direct Examination by Mr. Farley..... 752
Cross Examination by Mr. Michael..... 801
Re-Direct Examination by Mr. Farley..... 813
Re-Cross Examination by Mr. Michael..... 820

ERVIN FRANKLIN (Defendant's Witness):
Direct Examination by Mr. Farley..... 825
Cross Examination by Mr. Spohn..... 843
Re-Direct Examination by Mr. Farley..... 846
Re-Cross Examination by Mr. Spohn..... 846
Re-Direct Examination by Mr. Farley..... 846
Re-Cross Examination by Mr. Spohn..... 847

JOSEPH HENRY ACHTEN (Defendant's Witness):
Direct Examination by Mr. Farley..... 847
Cross Examination by Mr. Michael..... 856
Re-Direct Examination by Mr. Farley..... 859

FRED HOVIS (Recalled) (Defendant's Witness):
Re-Direct Examination by Mr. Farley..... 863
Re-Cross Examination by Mr. Spohn..... 869
Re-Direct Examination by Mr. Farley..... 874
Re-Cross Examination by Mr. Spohn..... 877
Re-Direct Examination by Mr. Farley..... 881
Re-Cross Examination by Mr. Spohn..... 882

VOLUME III.

Defendant's Record (Continued),
Appendix to Record and Appeal Papers.

HAROLD W. HOGELAN (Defendant's Witness):
Direct Examination by Mr. Farley..... 883
Re-Direct Examination by Mr. Farley..... 889

PIERCE ALBERT WEYL (Defendant's Witness):
Direct Examination by Mr. Farley..... 891
Cross Examination by Mr. Michael..... 911
Re-Direct Examination by Mr. Farley..... 913
Re-Cross Examination by Mr. Michael..... 918
Re-Direct Examination by Mr. Farley..... 920
Re-Cross Examination by Mr. Michael..... 924

JAMES McEVOY (Defendant's Witness):
Direct Examination by Mr. Farley..... 925
Cross Examination by Mr. Michael..... 932
Re-Direct Examination by Mr. Farley..... 935

ALBERT APTEKAR (Recalled) (Defendant's Witness):
Re-Direct Examination by Mr. Farley..... 936
Re-Cross Examination by Mr. Spohn..... 939
Re-Cross Examination by Mr. Michael..... 940
Re-Direct Examination by Mr. Farley..... 942
Re-Cross Examination by Mr. Michael..... 943
Re-Direct Examination by Mr. Farley..... 945

I. JOSEPH FARLEY (Defendant's Witness):
Direct Testimony 951
Cross Examination by Mr. Michael..... 956

JOHN W. MICHAEL (Plaintiff's Witness):
Direct Testimony 962
Cross Examination by Mr. Farley..... 965

NORMAN R. SCOVILL (Defendant's Witness):
Re-Direct Examination by Mr. Farley..... 971

HAROLD M. WOEHRLE (Defendant's Witness):
Re-Direct Examination by Mr. Farley..... 980

WILLIAM F. PIOCH (Defendant's Witness):
Re-Direct Examination by Mr. Farley..... 1051
Re-Cross Examination by Mr. Michael..... 1055
Re-Direct Examination by Mr. Farley..... 1059
Re-Direct Examination by Mr. Farley..... 1060
Re-Cross Examination by Mr. Michael..... 1061
Re-Direct Examination by Mr. Farley..... 1063
Re-Cross Examination by Mr. Michael..... 1063
Re-Direct Examination by Mr. Farley..... 1063
Re-Cross Examination by Mr. Michael..... 1064
Re-Direct Examination by Mr. Farley..... 1064
Re-Cross Examination by Mr. Michael..... 1065

HAROLD M. WOEHRLE (Defendant's Witness):
Re-Direct Examination by Mr. Farley..... 1065
Re-Cross Examination by Mr. Spohn..... 1071
Re-Direct Examination by Mr. Farley..... 1080

DONALD M. RUSSELL (Defendant's Witness):
Direct Examination by Mr. Farley..... 1082

HAROLD M. WOEHRLE (Defendant's Witness):
Examination by the Master..... 1094
Re-Direct Examination by Mr. Farley..... 1095
Re-Cross Examination by Mr. Spohn..... 1096

ALEXANDER OBERHOFFKEN (Defendant's Witness):
Direct Examination by Mr. Farley..... 1097
Cross Examination by Mr. Michael..... 1114
Re-Direct Examination by Mr. Farley..... 1122
Re-Cross Examination by Mr. Michael..... 1124
Re-Direct Examination by Mr. Farley..... 1126
Re-Cross Examination by Mr. Michael..... 1127
Re-Direct Examination by Mr. Farley..... 1129

HENNING OHRN (Defendant's Witness):
Direct Examination by Mr. Farley..... 1130
Cross Examination by Mr. Michael..... 1137
Re-Direct Examination by Mr. Farley..... 1150

CHARLES HAJOVICH (Defendant's Witness):
Direct Examination by Mr. Farley..... 1151
Cross Examination by Mr. Michael..... 1159

ALBERT KIPTA (Defendant's Witness):
Direct Examination by Mr. Farley..... 1165
Cross Examination by Mr. Michael..... 1167

WILLIAM D. HUNT (Recalled) (Defendant's Witness):
Re-Direct Examination by Mr. Farley..... 1171
Re-Cross Examination by Mr. Michael..... 1174
Re-Direct Examination by Mr. Farley..... 1182

CHARLES GORDON (Recalled) (Plaintiff's Witness):
Re-Direct Examination by Mr. Michael..... 1183
Re-Cross Examination by Mr. Farley..... 1198

TODD L. MOISE (Recalled) (Plaintiff's Witness):
Re-Direct Examination by Mr. Spohn..... 1210
Re-Cross Examination by Mr. Farley..... 1240
Re-Direct Examination by Mr. Spohn..... 1258

APPENDIX

TO TRANSCRIPT OF RECORD

Designated Portion of the Testimony of the Witnesses Otto H. Schultz, Frank Steinke, Bert Weisel, William Cunningham, and Charles Gordon from Plaintiff's Exhibit 14—Patent Office Record, Interference No. 47,200—Herman W. Melling vs. Charles Gordon and Alfred Redlin.

OTTO H. SCHULTZ:

Q. 1, page 132, to and including Q. 22 and Answer, page 136:

Direct Examination by Mr. Earl..... 1261

Q. 45, page 140, to and including Q. 72 and Answer 145:

Direct Examination by Mr. Earl..... 1264

BERT WEISEL:

Q. 1, page 190, to and including Q. 55 and Answer, page 198:

Direct Examination by Mr. Earl..... 1268

XQ. 84 and Answer, page 203:

Cross Examination by Mr. Dennett..... 1274

XQ. 100, page 205, to and including XQ. 102 and Answer, page 206:

Cross Examination by Mr. Dennett..... 1274

XQs. 115 and 116 and Answers, page 210:

Cross Examination by Mr. Dennett..... 1275

XQ. 121, page 211, to and including RDQ. 150 and Answer, page 219:

Cross Examination by Mr. Dennett..... 1276

Re-Direct Examination by Mr. Earl..... 1281

RDQs. 153 and 154 and Answers, page 220:

Re-Direct Examination by Mr. Earl..... 1282

RDQ. 166, page 222, to and including RDQ. 177 and Answer, page 224:

Re-Direct Examination by Mr. Earl..... 1282

RDQ. 183, page 224 to and including RXQ. 193 and Answer, page 226:

Re-Direct Examination by Mr. Earl..... 1284

Re-Cross Examination by Mr. Dennett..... 1284

RRDQ. 207 and Answer, page 229:

Re-Re-Direct Examination by Mr. Earl..... 1285

FRANK STEINKE:

Q. 1, page 230, to and including RDQ. 66 and Answer, page 238:

Direct Examination by Mr. Earl..... 1286

Cross Examination by Mr. Dennett..... 1289

Re-Direct Examination by Mr. Earl..... 1291

WILLIAM CUNNINGHAM:

Q. 1, page 288, to and including Q. 16 and Answer, page 293:

Direct Examination by Mr. Earl..... 1292

XQ. 19, page 293, to and including XQ. 43 and Answer, page 298:

Cross Examination by Mr. Dennett..... 1295

RDQ. 44 and Answer, page 299:

Re-Direct Examination by Mr. Earl..... 1299

CHARLES GORDON:

Q. 56, page 402, to and including Q. 57 and Answer, page 403:

Direct Examination by Mr. Dennett..... 1300

Q. 66, page 405, to and including Q. 74 and Answer, page 409:

Direct Examination by Mr. Dennett..... 1300

XQ. 188, page 441, to and including XQ. 190 and Answer, page 442:

Cross Examination by Mr. Earl..... 1303

Master's Report in *National Tube Company v. Mark et al.*, Equity No. 4360 1305

Proceedings in Court 1305

Proceedings Before the Master 1306

Conceded Facts 1307

The 1909 Order 1308

Answers to Questions Referred 1309

Gains and Profits 1310

Savings 1312

Advantages Derived by Defendant From and Through Said Infringement 1315

License 1319

Special Damages 1321

Damages 1322

Interest on the Award 1325

Judge Sater's Opinion on Exceptions to Master's Report in *National Tube Company v. Mark et al.*, Equity No. 4360 1326

Special Master's Report, on Accounting of Profits, Opinion and Order, and Opinion and Order on Standard of Comparison in *O'Neal v. San Jose Canning Co.*, Equity No. 1307 1333

Special Master's Report on Accounting of Profits 1333

Master's Opinion and Order 1336

Special Master's Opinion and Order on Standard of Comparison 1340

Opinion of the Circuit Court of Appeals for the Sixth Circuit in *Gordon Form Lathe Co. v. Walcott Machine Co.*, No. 5511, Decided April 12, 1929, 32 Fed. (2d) 55 1344

Opinion of the Circuit Court of Appeals for the Sixth Circuit in *Gordon Form Lathe Co. v. Ford Motor Co.*, Nos. 7363, 7364, Decided January 12, 1937, 87 Fed. (2d) 390 1358

Final Judgment 1365
Notice of Appeal of Plaintiff..... 1369
Bond on Appeal of Plaintiff..... 1370
Plaintiff's Statement of Points To Be Urged on Appeal.... 1371

Notice of Appeal of Defendant..... 1373
Bond on Appeal of Defendant..... 1375
Defendant's Statement of Points To Be Relied On Upon Appeal under Rule 75(d) of Rules of Civil Procedure... 1376

Stipulation Re Waiver of Supersedeas Bond..... 1379
Stipulation Concerning Number of Copies of Record to be Filed on Appeal..... 1379
Stipulation Re Exhibits and Transcript of Record on Appeal in *Gordon v. Ford,* Nos. 7363-4..... 1380
Order Re Exhibits and Transcript of Record on Appeal in *Gordon v. Ford,* Nos. 7363-4..... 1381
Stipulated Designation of Contents of Plaintiff-Defendant Composite Record on Appeal..... 1382
Stipulation Extending Time to July 29, 1941..... 1399
Order Extending Time to July 29, 1941..... 1399
Stipulation (filed July 21, 1941) Extending Time to September 27, 1941, and Approval of U. S. Circuit Court of Appeals 1400
Stipulation (filed September 24, 1941) Extending Time to October 27, 1941..... 1401
Stipulation Extending Time to November 26, 1941, and Approval of U. S. Circuit Court of Appeals..... 1402
Certificate of Clerk..... 1403

VOLUME IV.

Plaintiff's Exhibits, Defendant's Exhibits and Main Record Exhibits.

PLAINTIFF'S EXHIBITS.

EXHIBIT		PAGE
D.	Cost Summary Card for A-6250 Camshaft covering January and March 1930 and September and October 1929	1404-5
E.	Cost Summary Card for A-6250 Camshaft covering May, August and October 1930 and March 1931	1406-7
E-1.	Cost Summary Card for A-6250 Camshaft covering March, May and July 1929. (Same as Exhibit 6 in Exhibit A)	1408-9
F.	Cost Summary Card for T-410 Camshaft covering January to June 1923	1410
F-1.	Cost Summary Card for T-410 Camshaft covering July to November 1923	1411
F-2.	Cost Summary Card for T-410 Camshaft covering January to June 1924	1412
F-3.	Cost Summary Card for T-410 Camshaft covering July to November 1924	1413
F-4.	Cost Summary Card for T-410 Camshaft covering April to September 1925	1414
F-5.	Cost Summary Card for T-410 Camshaft covering October to November 1925	1415
F-6.	Cost Summary Card for T-410 Camshaft covering January 1926 to October 1929	1416-17
F-7.	Cost Summary Card for T-410 Camshaft covering November 1928	1418
F-8.	Cost Summary Card for T-410 Camshaft covering October 1930	1419
F-9.	Cost Summary Card for A-6250 Camshaft covering August 1928 to January 1929	1420-21

EXHIBIT PAGE

F-10. Cost Summary Card for A-6250 Camshaft covering December 1927 to June 1928.....1422-23

F-11. Cost Summary Card for F-446 Camshaft covering April to September 1925..... 1424

F-12. Cost Summary Card for F-446 Camshaft covering October to November 1925..... 1425

F-13. Cost Summary Card for F-446 Camshaft covering January 1926 to March 1928.....1426-27

H-1. Production Cost Record for T-410 Camshaft covering November 1927..... 1428

L-1 to L-3. Pages from note book kept by witness Spencer W. Libby 1429-31

M. Operation Sheet compiled from notations appearing in Exhibit L. (Same as Exhibit 13 attached to Exhibit C) 1432-33

N. Operation Sheet for T-410 Camshaft dated 10-8-24. (Same as Exhibit 14 attached to Exhibit C).....1434-35

O. Correspondence between Ford Motor Company and Jackson Shaper Company.....1436-63

P-1 to P-14. Ford Work Orders for Repairs to Melling Lathes 1464-70

Q. Inventory card covering Ford Camshaft Shaper #10706 1471

R. Inventory card covering Ford Camshaft Shaper #11628 1472

S. Inventory card covering Ford Camshaft Shaper #12205 1473

W-1 to W-14. Study of operation of Melling Lathes....1474-87

X-1. Productive Labor and Overhead for Department 410 6-1-25 1488

X-2. Same—continued to 2-28-31 1489

X-3. Productive Labor and Overhead for F-446 Camshaft Machining 6-1-25 to 3-31-28 1490

Exhibit		Page
Y-1.	Inventory Card covering Melling Cam Turning Lathe Ford #36592	1491-92
Z-3.	Plaintiff's statement of account	1493-1513
Z-4.	Plaintiff's schedule showing computation of depreciation on Model T type cam shapers and Melling Cam Lathes	1514-16
Z-5.	Plaintiff's compilation of depreciation cost on Model T Cam Shapers and Melling Cam Lathes	1517-18
Z-6.	Plaintiff's computation of Maintenance and Overhaul Expense	1519-22
Z-7.	Plaintiff's computation of Cost of Tools	1523-24
CC.	Telegram dated 11-18-30 addressed to Ford Motor Company	1525
DD.	Telegram dated 11-18-30	1526
GG.	Release to White Motor Company from infringement of Gordon patent. (Included in Exhibit RR).	1540
HH.	Letter of White Motor Company to Mr. John W. Michael dated 12-24-29. (Included in Exhibit RR).	1532
RR.	Gordon Form Lathe Company agreement file	1527-57

DEFENDANT'S EXHIBITS.

209.	Copy of U. S. Patent No. 1,655,655 of January 10, 1928 to Herman W. Melling	1558-66
217 to 222.	Ford Purchase Orders for Melling Cam Turning Lathes	1567-73
232.	White Motor Company Departmental Correspondence dated 12-17-31	1574
233.	Same—dated 1-29-30	1575
254.	Ford Motor Company print dated 11-17-13 showing front view of construction of original Ford Cam Shaper with attachment superimposed in yellow	1576
255.	Same—end view	1577

Exhibit		Page
257.	Ford assembly print showing attachment for use in shaping Model A Camshafts	1578
258.	Same—sub-assembly	1579
259.	Same—showing removal of tools numbers 1 and 5	1580
263.	Sketch drawn by witness Pioch	1581
264.	Letter of Mr. Pioch to Mr. Farley dated 11-2-38	1582
266.	Computation by witness Pioch	1583
268.	Print Camshaft Shaping Machine Oberhoffken design—layout showing "tools to cut in both directions—speeds being equal"	1584
269.	Same—Layout to show individual relief of tools on return stroke	1585
272.	Sketch by witness Brush showing cutting action of Shaper Tool	1586
273.	Same—showing cutting action of Melling Tool	1587
276.	Brush sketch of two way cuts	1588
281.	Operation Sheet for T-410 Camshaft dated 12-21-27. (Same as Exhibit 15 in Exhibit C)	1589-90
289 (1 to 10).	Engineering Record of T-410 Camshaft, Forging Size	1591-95
290 (1 to 13).	Same—Finished Size	1596-1602
291 (1 to 3).	Engineering Record for A-6250 Camshaft, Forging Size	1602-03
292 (1 to 4).	Same—Finished Size	1604-05
293.	Ford print 9-Z-32, Shaper Tool	1606
294.	Ford print 9-Z-215, Melling Tool	1607
295.	Letter of witness Pioch dated 2-1-39 re: Surface Speeds of Shaper Tools	1608-09
296.	Sample Ford Purchase Order	1610
297.	Print of Ford Camshaft A-6250-A1	1611

EXHIBIT PAGE

298 (1 to 6). Engineering Record Fordson Tractor Camshaft, Forging and Finished Size.....1612-14

299. Summary of Ford Tractor Production..... 1615

301. Defendant's substitute pages for plaintiff's statement of account Exhibit Z-3 making 3 changes....1616-22

302. Same—6 changes 1623-29

304. Pages from Ford Parts Price List, effective 2-1-31 1630-33

305. Defendant's computation of Comparative Direct Labor Costs on F-446 Tractor Camshafts.....1634-35

306. International Harvester Company Requisition for Gordon Lathe dated 11-20-19..... 1636

307. International Harvester Company order for Gordon Lathe dated 11-24-19 1637

308. International Harvester Company installation of machinery card covering "Gordon Std. Cam Turning Machine" 1638

309. International Harvester Company disposition of machinery card covering same 1639

312. Copy U. S. Patent No. 1,512,995 of 10-28-24 to Herman W. Melling 1640-47

313. Copy U. S. Patent No. 1,634,550 of 7-5-27 to Herman W. Melling 1648-52

314. Print #C-2129 of Walcott Machine Company—"Assembly of New Style Parallel Type Tool Head" 1653

315. Print #KT-530-A of Walcott Machine Company—"Assembly of Tool Head" 1654

MAIN RECORD EXHIBITS.

Exhibit		Page
2.	Copy of U. S. Patent No. 1,542,803 of 6-16-25 to Chas. Gordon *et al.*	1655-69
5.	Amended Final Decree in Walcott case	1670-72
40.	Notice of Infringement dated 7-1-25	1673
41.	Cuts only of Walcott Machine Company advertising pamphlet	1674-75
42.	Mailing List	1676-83
48.	1929 Notice of Infringement	1684-86
52.	Photograph of Ford Shaper ¾ front view	1687
53.	Same—front view	1688
53-b.	Illustrated chart of Ford Shaper tool movements and actions	1689
55.	Record re: delivery of Gordon machine to Ford	1690
56.	Copy of Ford order for Gordon machine	1691-92
61.	Affidavit of I. W. Kindall re: Ford Camshaft Shaper	1693
62.	Ford Motor Company Print dated 5-18-15 showing Ford Camshaft Shaper, front view	1694
63.	Same—end view	1695
64.	Walcott letter to Ford 7-30-29	1696
71.	Copy of General Motors-Gordon Company Agreement. (Included in Exhibit RR)	1552-57
154-a, b, c, d.	Records produced by Ford in response to Court order	1697-1700

CAPTION.

EASTERN DISTRICT OF MICHIGAN,
SOUTHERN DIVISION, SS.

Record of proceedings of the District Court of the United States within and for the Southern Division of the Eastern District of Michigan in the cause and matter hereinafter stated. Said action was commenced on the 6th day of July, 1937, and proceeded to final disposition on the 29th day of April, 1941, and during the progress thereof pleadings and papers were filed and orders of the Court made and entered in the order and on the dates hereinafter stated, to-wit:

Present: THE HONORABLE ARTHUR J. TUTTLE,
United States District Judge.

THE GORDON FORM LATHE COMPANY
vs.
FORD MOTOR COMPANY.
} IN EQUITY No. 4564.

DECREE ON MANDATE.

(Entered June 28, 1937 by Arthur J. Tuttle, Judge.)

This cause having been heard by this Court, and upon consideration thereof and upon arguments and briefs of counsel, and interlocutory decree of this Court entered thereon on the 20th day of November, 1934, and appeal of defendant and cross-appeal of plaintiff having been allowed to the Circuit Court of Appeals for the Sixth Circuit from said decree, and such appeals having been heard and disposed of, and said Circuit Court of Appeals having ordered and decreed that the said decree of this Court in this cause be modified and the cause remanded for further proceedings in conformity with the opinion of the Circuit Court of Appeals given January 12, 1937 and the further opinion and ruling of said Court given and entered June 4, 1937, and the mandate of said Court, issued February 19, 1937, having been recalled and amended, and this cause having been remanded to this Court on said amended mandate, now in pursuance thereof, it is

ORDERED, ADJUDGED and DECREED

(1) That the interlocutory decree of this Court entered on the 20th day of November, 1934, be and the same is hereby vacated in favor of this decree which is substituted and entered in place thereof.

(2) That Letters Patent of the United States to Charles Gordon and Alfred W. Redlin No. 1,542,803, issued June 16, 1925 for Lathe is good and valid in law as to Claims 1, 2, 28, 29, 30, 33, 34, 39, 40, 41 and 42; that the inventors, Charles Gordon and Alfred W. Redlin, named in the patent, were the first, true, original and joint inventors of the inventions, improvements and combinations described therein; and that the plaintiff, The Gordon Form Lathe Company, is the lawful owner of the entire right, title and interest in and to said inventions, improvements and combinations and in and to said Letters Patent therefor, as aforesaid, and has full standing in equity with respect to the issues involved in this suit.

(3) That defendant, Ford Motor Company, has infringed the United States Letters Patent No. 1,542,803 to Gordon and Redlin and Claims 1, 2, 28, 29, 30, 33, 34, 39, 40, 41 and 42 thereof and has violated the exclusive rights

of the plaintiff thereunder by the use of machines known in this record as the Melling or Walcott machine and illustrated in Exhibit 21 (drawings of the Melling machine marked B-1, B-2, B-3 and B-4).

(4) That defendant, Ford Motor Company, has not infringed the United States Letters Patent No. 1,542,803 to Gordon and Redlin and claims 29 and 30 of said Gordon and Redlin patent by the manufacture and use of machines known as the Pioch machine illustrated in Plaintiff's Exhibits 23, 24, 25, 44 and 114.

(5) That a Writ of Injunction issue out of and under the seal of this Court directed to the said defendant, Ford Motor Company, its officers, agents, attorneys, employees, associates and privies enjoining and restraining it and them and each of them, from directly or indirectly infringing any of the claims 1, 2, 28, 29, 30, 33, 34, 39, 40, 41 and 42 of said Letters Patent and particularly from making or selling or using any machines like those illustrated in Exhibit 21 (drawings of the Melling machine marked B-1, B-2, B-3 and B-4), or any apparatus or devices covered by or containing or embodying any of the inventions defined in any of said claims, and from offering or advertising so to do, and from aiding or abetting others or in any way contributing to the infringement of any of said Claims 1, 2, 28, 29, 30, 33, 34, 39, 40, 41 and 42 of said Letters Patent.

(6) That the plaintiff recover from the defendant, Ford Motor Company, the damages which plaintiff has sustained and the profits, gains and advantages which the defendant has derived, received, earned or saved by reason of defendant's infringements of said Letters Patent No. 1,542,803, and this cause is hereby referred to Donald L. Quaife, Esq., as Special Master, to take and report an account of such profits, gains and advantages of the defendant, and the damages sustained by the plaintiff by reason of said infringements, and to compute and report a reasonable royalty for the use of said machines and to take evidence and report, on the questions of increase of damages, and that the defendant, its officers, agents, clerks and employees are required to attend before said Master from time to time as he shall direct and produce before him all of its books, papers, vouchers, documents and de-

vices as the Master shall order produced, and to submit to such oral examination as he may direct.

(7) That the bill of complaint is dismissed without prejudice as to claims 12, 23, 24 and 38.

(8) That costs not having been awarded upon appeal from the interlocutory decree, no costs on said appeal shall be taxed herein.

(9) Neither party is awarded any costs in this Court prior to the date hereof.

TUTTLE, *J.* (sgd)
United States District Judge.

Detroit, Michigan,
June 28, 1937.

Approved as to form:

SWAN, FRYE & HARDESTY,
Solicitors for Plaintiff.

BODMAN, LONGLEY, BOGLE, MIDDLETON & FARLEY,
Solicitors for Defendant.

REPORT OF SPECIAL MASTER.

(Filed March 3, 1941.)

To the Honorable Arthur J. Tuttle, District Judge:

This case was referred to me as Special Master to take and report an account of the profits, gains, and advantages of the defendant and the damages sustained by plaintiff by reason of the infringement by defendant of plaintiff's patent, Number 1,542,803, issued June 16, 1925, upon a machine for turning non-geometrical forms, and to determine also a reasonable royalty for the use of plaintiff's patent and the question of whether the damages sustained by plaintiff should be increased. Pursuant to the order of reference, I obtained from defendant elaborate state-

ments of account, covering facts underlying the determination of profits and damages and a statement of profit and loss in debtor-creditor form, which were largely prepared by independent accountants retained by defendant. The plaintiff also employed an independent firm of accountants to prepare statements of profits of the defendant from infringement, which were duly filed. A great deal of evidence, including testimony covering approximately 3,500 pages of transcript and hundreds of exhibits, was introduced; and exhaustive briefs covering the legal and factual issues in the accounting were filed by both parties. I have carefully studied all of these documents, as well as the record of the trial before the Court preceding the interlocutory decree on the question of the validity and infringement of the Gordon patent, the opinions of the various tribunals which have passed upon the said patent, and the many reported decisions of the federal courts relevant to the legal issues in the accounting; and I report to the Court herewith my findings of fact and conclusions of law resulting from this investigation. Because of the difficulties encountered in this case, and in order to comply with the standards for a master's report in a patent accounting case set forth in *Horvath v. McCord,* 100 F. (2d) 326 (C. C. A. 6, 1938), I am putting this report in opinion form, with the intention that it shall serve as findings of fact and conclusions of law.

I. NATURE OF INVENTION AND HISTORY OF LITIGATION AND OF DEFENDANT'S USE OF MACHINERY.

The infringement of the defendant consisted in the use of certain cam-cutting machines (referred to hereinafter as the "Walcott" or "Melling" machines) designed by one Melling and constructed and sold by the Walcott Machine Company, of Jackson, Michigan. The controversy over the Gordon and Melling machines has had an extended history of litigation, including interference proceedings in the patent office appealed to the highest tribunal (*Melling v. Gordon,* 4 F. (2d) 945, C. A. D. C., 1925); a proceeding under Sec. 4915 R. S. by Melling to compel the issuance of a patent (*Melling v. Gordon Form Lathe Co.,* 14 F. (2d) 437, D. C., Ohio, 1926); a suit for patent in-

fringement by the present plaintiff against the Walcott Company (*Gordon Form Lathe Co. v. Walcott Machine Co.*, 20 F. (2d) 673, D. C., Mich., 1927, same case on appeal, 32 F. (2d) 55, 1929); and, finally, the present suit, the opinion of the Circuit Court of Appeals being found at 87 F. (2d) 390 (1937). In all of this litigation Gordon was successful on the question of validity and infringement, with the exception of the decision by Judge Simons of this district reported at 20 F. (2d) 673 (1927), in which the Gordon patent was held valid but the Melling machine non-infringing. The Circuit Court of Appeals in both of the decisions held the Gordon patent to be a pioneer patent. Reference is made to the cited opinions for a fuller understanding of the history of litigation over these machines, and for a complete description of the Gordon invention and the mode of operation of the Gordon and Walcott machines, all of which it is unnecessary to repeat in detail here. However, a brief statement of the nature of the patent in litigation and the history of the defendant's use is advisable at the outset.

Plaintiff's patent is one upon a lathe to turn non-geometrical forms, as applied to this case specifically, the pear-shaped cams on an automobile camshaft. The germ of the Gordon invention, as found by the Circuit Court of Appeals, is the oscillation or tilting of the tool under the control of a master cam to maintain at all times a proper cutting angle between the upper surface of the cutting tool and the surface of the work cam. The function of a camshaft in an automobile is to regulate the opening and closing of the valves which admit the combustible mixture into the cylinder and permit it to be expelled after combustion. There are, therefore, two cams, inlet and outlet, for each cylinder. In order to secure proper timing in the engine, it is necessary to machine the camshaft with great accuracy, both cams and bearings generally being machined to a finish tolerance of 2/1000 of an inch. The method of manufacture of a camshaft during and prior to the period of infringement was to forge a steel shaft of the same general shape as the finished shaft but with as much as one fourth inch of excess metal upon it, and to reduce it to finished form and composition in approximately fifty different operations upon

it. In the sequence of operations, the shaft is centered; the concentric bearings and the parts between the cams are turned; and the surplus metal is removed from the cams in two steps: (1) a rough machining operation, which removed most of the metal, and which was the operation performed by the machines in litigation; and (2) a finish grinding of the shaft. In between these two operations, the shaft is casehardened to make its surface wear-resistant. After these and other operations to finish the flanges and bearings, and to put on the necessary screw threads and dowel holes, the shaft is polished and is ready for inspection.

The removal of the excess metal from the cams of a camshaft has always involved difficulty because of their irregular shape. Until the development of the machines in litigation, it was generally thought not to be feasible to use a lathe, such as was used on the cylindrical parts of the shaft, because of the poor cutting angle of the tool traveling around the nose of the cam and the sharp clearance angle required; and only one instance of the use of this type of machine (the so-called Westinghouse lathe) prior to the plaintiff's patent is known. The method in most general use before 1920 was that of grinding—a slow and expensive operation in which the metal was ground off each cam individually with an emery wheel. There were isolated uses of other machines, notably by the defendant, which had not used the grinder (except for its tractor shaft) since early in the century. Prior to 1913, the defendant was using a form miller, which rough machined the cams in three operations, but in that year it adopted for its automobile production a special production machine, designed by its engineers and built to order, known as the Ford cam shaper. In this machine (which is classified as a planer), the camshaft was mounted upon a ram and reciprocated longitudinally beneath eight cutting tools, one for each cam, which were relieved individually under the control of master cams to secure the desired shape of the work. The tools cut in only one direction, and on the return stroke (which was twice as rapid as the forward stroke) the tools were retracted in a body and the shaft rotated a small distance in preparation for the next cutting stroke, approximately ninety strokes being required to cut entirely around the cams. A second revolution of the shaft was made for a

finishing cut, the tools not being advanced but the natural spring back of the shaft permitting the removal of a slight additional amount of metal.

The commercial use of the Gordon machines was limited, less than thirty being sold and their manufacture discontinued some time before the issuance of its patent, due to the successful competition of the Walcott machines, which were better adapted to machine the type of cams in use in the automotive industry. In 1923, defendant purchased on approval a Gordon lathe for use on its tractor shaft, but found that the rapid angular swing in the tool cutting around the point of the sharp-nosed cam used in the Ford shaft during a small angular rotation of the workpiece caused the tool frequently to depart from its proper path, resulting in a nick on the leading side of the nose of the cam, which made it necessary to scrap the shaft. The machine was consequently rejected by defendant. The Walcott lathe (which was designed by Melling after witnessing the operation of a Gordon machine on a Ford tractor camshaft) avoided this difficulty by pivoting the tool upon a center remote from the cutting point, which caused the tool to cut slowly around the point of the cam with a relatively small change in its angular position. (This departure from the Gordon machine, which pivoted the tool around its cutting point, was held by the Court of Appeals to be insufficiently substantial to negative infringement.) Accordingly, in 1924, defendant purchased a battery of eighteen Walcott machines for its entire production of camshafts (two for the tractor and sixteen for the automobile shaft). It continued to use them (with the addition of six more in 1929) until 1931, when they were finally replaced by milling machines which were designed by defendant's engineer Pioch to avoid the effect of the decision of the Court of Appeals in 1929 that the Walcott machines were infringing, and which in this case were ultimately held noninfringing. To bring this recital down to date, it should be stated that in 1935 the defendant eliminated the operation for which the machines in litigation were used by substituting cast alloy shafts, cast with such accuracy that a roughing operation preceding the finish grinding of the cams became unnecessary. It appears, however, that except for Ford, the Walcott machines are still in general use in the industry for rough-machining camshafts.

II. CLAIMS OF PARTIES.

Despite the thoroughness with which every avenue of this case has been explored in the hearings, the parties are very far apart on the ultimate question of defendant's liability and on practically every issue in the accounting. The plaintiff claims that the profits, savings, gains, and advantages of the defendant from infringement, computed on a conservative basis, amounted to a minimum of $957,340.36; and that the damages suffered by plaintiff, on the basis of a reasonable royalty of six cents per camshaft turned on the infringing machines, amounted to $475,095.74. Plaintiff also claims that the reasonable royalty should be tripled for willful infringement, at least for the period subsequent to the decision of the Circuit Court of Appeals in *Gordon v. Walcott* in 1929. On the other hand, the defendant claims that it realized no savings, but rather lost money, from the use of the infringing machines; that the plaintiff suffered no damage from the infringement; that its infringement was not willful and plaintiff is not entitled to increased damages, if any be found to exist; that, if defendant realized any profits or savings, they are attributable not to the Gordon invention but rather to patented improvements incorporated in the Walcott machine; and, finally, that in any event the plaintiff is entitled to neither damages nor profits for the period prior to notice of infringement on June 13, 1929. Defendant further charges that the plaintiff is guilty of unclean hands, which should bar it from any relief.

Before considering specifically the issue in this accounting, it may be advisable to make some general comments upon the claims made by the parties. With regard to defendant's claim of loss, while it is conceivable that it made a mistake in adopting the Walcott machines and that it did not notice the slight loss per cam claimed it, especially since it was attributable to the addition of another operation, still such a condition would be the exceptional thing, and the contention should be scrutinized closely before being accepted. A claim of loss by the infringer appears to be quite common in patent accounting cases. While it is true that in many cases the claim has been sustained, the courts have always regarded it with some suspicion. (See remarks in *Carson v. American Smelting Co.*, 25 F. (2d)

116, 121, D. C. Wash., 1928; *Haiss Mfg. Co. v. Link Belt Co.*, 50 F. (2d) 450, D. C. Pa., 1931, affirmed 63 F. (2d) 479; *Emigh v. B. & O. R. Co.*, 6 Fed. 283, C. C. Md., 1881.) While the claim is here certified to by independent accountants, such also was the case in *Larson v. Wrigley*, 20 F. (2d) 830, and 277 U. S. 97, 72 L. Ed. 800 (1928), where profits of approximately $1,000,000 were found to exist.

Defendant's claim should be considered further in the light of its experience with the Walcott machines. Defendant first ordered two Walcotts in January, 1924, after an investigation by its purchasing department. After trying them out, it ordered sixteen more in April, receiving the last one in June; and it cancelled orders for five new shapers under construction, at a cost of $20,000. The Model T machines were first installed at its Highland Park plant, and a study of their operation was made by the purchasing department from August 11 to November 1, the conclusion being reached that they were only sixty per cent efficient. Nevertheless, no attempt was made to recover from the Walcott Company on its guarantee of production, which defendant had insisted upon; but instead the defendant moved the machines to the Rouge plant, to which its main productive activities were being transferred, making some changes in the machines, particularly the slides. Before moving them, it set up the shapers at the Rouge plant, but again replaced them with the Walcotts. Within the next two years, it had scrapped all of the shapers. In 1929, defendant purchased six more Walcotts, and neither then nor later in the year when it was searching for a non-infringing substitute did it consider returning to them.

It may also be noted that there was some change between the infringement and accounting stages of this case in the attitude of defendant's employees toward the Walcott lathes. While during the main trial they were regarded as excellent machines, there was some tendency to disparage them on the accounting as being overly complicated and troublesome. Of course, as in practically all patent accountings, most of the evidence here has had to come from defendant; and this should be considered in weighing the evidence, since the testimony of some (though by no means all) of its witnesses was understandably affected by the self-interest of their employer.

I have the feeling, on the other side, that plaintiff, as well as defendant, has taken a somewhat extreme position in this case. There is a tendency on its part to measure the benefits of the Walcott machines to Ford largely by reference to the grinding process, overlooking the fact that Ford had had a machine much superior to that in use by the rest of the industry. There was some difference of position on the part of plaintiff upon similar issues: for example, it has minimized the differences between the Gordon and Walcott machines, while at the same time claiming that a relatively slight change in the Westinghouse machine by defendant entirely changed its principle of operation.

Of course, an accounting of this sort is necessarily of a speculative nature and offers room for considerable difference of opinion. Difficulties are inherent in an attempt to compute profits from the use of a machine producing one out of several thousand parts in an automobile, and even under ideal conditions a large element of guesswork is inevitable in the conclusions adopted.

III. ACCOUNTING PERIOD, AND PRODUCTION OF SHAFTS ON INFRINGING MACHINES: QUESTION OF NOTICE.

The first problem is to define the scope of defendant's infringement, both in duration and in the number of separate accounts of infringement. The infringement period cannot begin before June 16, 1925, when the plaintiff obtained its patent and on which date the infringing machines had been used by defendant for more than a year. The period ends on March 16, 1931, when the Walcott lathes were finally replaced with the non-infringing Pioch machines.

A. BEGINNING OF PERIOD.

Defendant claims, however, that its infringement can not have commenced until June 13, 1929, when actual notice of the claim of infringement was received. In the main trial of this case, there was sharp dispute on this question, the plaintiff claiming that it mailed a notice of infringement to defendant in 1925; while defendant denied receiving the purported notice and also claimed that it was couched in such vague language as not to constitute a notice

of infringement, even if received. Your honor held that the sending of the 1925 notice to plaintiff had not been sufficiently proved, and provided in the interlocutory decree that the accounting period would commence on June 13, 1929. The Court of Appeals, however, ordered this provision stricken and the whole question reserved for the accounting, the court saying:

> "Concerning the cross appeal which challenges paragraphs 5 and 6 of the decree, it is our view, upon the authority of *Wine Railway Appliance Co. v. Enterprise Railway Equipment Co.*, 297 U. S. 387, 56 S. Ct. 528, 80 L. Ed. 736, and because of the apparent incompleteness of the record upon the issues involved, that all questions relating to the accounting should be postponed until after the return of the master's report." 87 F. (2d) 393.

In the accounting proceeding, the plaintiff submitted no additional evidence on the question of notice, relying upon the legal contention that actual notice is not a condition to its right to recover. After examination of the record, I see no reason to take a different view of the evidence than that of the District Court; and, insofar as the question is before me, I find that plaintiff first actually notified defendant of the infringement on June 13, 1929. Since the matter of giving notice is within the control of the plaintiff and a notice can easily be given in such manner that it can be proved, it is fair to require of plaintiff a fairly high standard of proof on this question.

The record further shows that the plaintiff had discontinued the manufacture of its patented machines some time before the issuance of its patent, and it neither manufactured nor sold machines after that date. All of the machines manufactured and sold theretofore, including the one sold to defendant, were marked with a notice of the pending patent application.

The question is now encountered of whether the plaintiff can recover prior to June 13, 1929, in the face of the provision of the Patent Statutes, 35 U. S. C. A. Sec. 49, requiring a patented article to give public notice that it is patented by marking it as such, and permitting him in default thereof to recover for infringement only upon proof of actual notice to defendant of infringement and con-

tinuance of the infringement after such notice. The decision of the Supreme Court in *Wine v. Enterprise, supra* (decided subsequent to the decree of the District Court in this case), is controlling on this issue. In that case, the court held that a non-manufacturing patentee, who was unable to mark his products, is not required to give actual notice to an infringer as a condition to recovery. The purpose of the statute, according to the court, is to require marking of patented articles and to prescribe a penalty for non-compliance; but it does not apply to non-producing patentees, because penalty for failure implies an opportunity to perform. The opposite rule would make it impossible for a patentee to recover against a secret infringer, a result Congress could not have intended.

Defendant claims *Wine v. Enterprise* does not apply to the case at bar because plaintiff here manufactured its machines prior to the issuance of his patent and hence is not a non-producing patentee. However, plaintiff did not manufacture subsequent to his patent, and obviously could no more mark its machines as patented than the plaintiff in the *Wine* case. The case of *Hazeltine v. Radio Corp.*, 20 Fed. Supp. 668 (D. C., N. Y., 1937) cited by plaintiff, differs from the present one, because there the plaintiff's licensees failed to mark the patent articles manufactured by them, and it was held that under the statute the plaintiff was in the same position as if it had manufactured itself.

Defendant further contends that the principle of *Wine v. Enterprise* does not apply to this case, because plaintiff here was not in the position of a patent owner "guilty of no neglect" but rather had full knowledge of defendant's use from the beginning, and a secret infringement is not therefore involved. However, neither the statute nor the court's interpretation of it makes the knowledge of either party of the infringement of any importance—in fact, it does not appear whether the patentee in the *Wine* case had such knowledge. The court states (p. 395) that obviously, except for the statute, a patentee might recover all damages without giving prior actual notice to the infringer; and then holds that the statute does not apply to a non-producing patentee. Perhaps, it would be most just to require a patentee having knowledge of an infringement to notify the infringer as a condition to recovery, although the argument in favor of such requirement would equally

apply whether the patentee had marked his articles with public notice or not. At any rate, the statute does not now require such notice; and defendant's appeal must be to Congress to amend the act.

It is finally contended that even if the act itself did not require plaintiff to notify defendant as a condition to recovery, still, under the authority of *Horvath v. McCord,* 100 F. (2d) 326 (C. C. A. 6, 1938), the plaintiff is precluded by the form of its pleadings from taking advantage of that fact. In that case, the court held that the intervening plaintiff-licensee, having alleged in its complaint actual notice, which was not proved, and not having claimed in its pleadings *in rem* notice to the public, could not rely upon *in rem* notice on the trial. (It appears that the intervening plaintiff had built three machines without the statutory markings, and that the court held, as an additional ground for its decision, that it had not shown compliance with the provisions of the statute.) I do not think, however, that the *Horvath* case bars the plaintiff here from recovering for infringement prior to June 13, 1929. The plaintiff in its complaint alleges the issue of its patent on June 16, 1925, and (in paragraph 8, which alleges actual notice) states that it "* * * has neither made nor sold the patented machine since the issue of the patent in suit." This would seem sufficiently to set forth the facts underlying plaintiff's claim of *in rem* notice: the only thing more it could have done would have been to have alleged specifically that defendant had constructive notice of the patent, which is in the nature of a legal conclusion. In order to have claimed *in rem* notice, it would have been necessary for the intervening plaintiff in the *Horvath* case, being a manufacturing licensee, to have made additional allegations that it had marked its machines with the statutory notice. Here, no additional allegations are necessary to raise the issue.

I therefore conclude that, under the statute, plaintiff can recover full profits and damages from defendant from the date of issue of its patent, without giving defendant actual notice. Of course, a patentee who sits idly by while an infringer builds up a business without protest may be barred from all recovery on the ground of laches. *Dwight & Lloyd Sintering Co. v. Greenwalt,* 27 F. (2d) 823, 827 (C. C. A. 2, 1928). However, no defense of laches as such

is made here; and there is no such neglect by plaintiff of its patent rights here as in those cases (see discussion of "Unclean Hands," *infra*).

B. PRODUCTION OF CAMSHAFTS AND END OF ACCOUNTING PERIOD.

The defendant used the Walcott lathes to machine three different types of camshafts: that for the Model T car from 1924 to 1929; the Model A car from 1927 to 1931; and the Model F tractor from 1924 to 1928. Actual production records are available for most of the months of infringement and for all of the months of Model A production. For nineteen months of Model T production and seventeen months of tractor production, actual production records were not kept; and the production during those months has been estimated by the defendant by adding motor production and camshaft service sales. This method is not one hundred per cent accurate because it does not take inventories into consideration, defendant's inventory records for the period having been destroyed. In fact, records of tractor camshaft production for certain months found during the trial showed a higher production than had been estimated. However, it has been the practice of defendant to have only a few days elapse between the delivery of raw materials to its plant and the production of the completed car, and to keep only a small and fairly constant inventory of parts on hand. Such errors as may result from variance between camshaft motor production plus service sales, and actual production, in a given month should not be great, and should tend to cancel out over a period of months. In the case of tractor shafts, the estimated method may result in an understatement of shafts during the later months of production, because of the probability that an inventory of camshafts was built up for the purpose of servicing tractors after the discontinuance of production; but no basis for estimating such production exists on this record.

A more serious difficulty is encountered in determining the production of Model A shafts on the Walcott lathes from May 13, 1930, when the first Pioch machine was installed, until the end of the accounting period, during which time the two types of machines were used simul-

taneously. The testimony indicates that as each Pioch machine was installed it was placed in immediate production and continuously so used. Finally, after all six Piochs had been installed, the overhead oscillating cams were removed from the Walcotts and their use for machining cams discontinued. While defendant has assigned February 4, 1931, as the terminal date for Walcott production, it is reasonably clear from the evidence that the date of discontinuance was March 16, 1931, which is in accordance with Pioch's own affidavit. The records show that all the Walcotts remained available until February 5, 1931, when eight were removed from the department, but that seven were not removed until March 16. The last Pioch machine was installed on February 3. It seems natural that defendant would run the Piochs a few weeks to see if they would turn out the production satisfactorily before discarding the Walcotts; and this conclusion fits in with Meyers' recollection (D. A. R. 444) to the effect that some Walcotts were moved out before the removal of the overhead mechanism.

Defendant kept no records showing actual production of camshafts upon each type of machine during the period of concurrent use. Defendant prorates the production for that period as follows: Pioch production is estimated by multiplying the number of hours of production in the department by the production per hour on the Pioch machines (at the rate of 42 shafts per machine, the figure shown on a time study in July, 1931); and the remaining production is assigned to the Walcotts. While defendant's method of proration attributes much the largest part of the production during the period to the Walcotts, plaintiff claims it overstates production on the Piochs, because the rate of production at the outset when the machines were new was probably considerably less than in July, 1931, and since the lunch period (of approximately twenty minutes per shift on three-shift days) was disregarded in computing production hours. Defendant's proration also assumes that all Pioch machines were working full time, without allowance for repairs beyond that provided in the time study. (On the other hand, there was considerable testimony that the Piochs averaged 55 shafts per hour in operation instead of 42; and during the months when only one was available,

the rate of production would tend to be higher than when one man operated two machines.)

Plaintiff claims that because of defendant's failure to keep separate records of Pioch production, all production during the period must be assumed to have been made on the Walcott machines. Support for this position is found in *Producers' & Refiners' Corp. v. Lehmann,* 18 F. (2d) 492, 498 (C. C. A. 8, 1927), where the records of defendant failed to separate the oil made and sold by it which was treated with the infringing process from that which was not so treated, and the court held that plaintiff was entitled to recover profits on all the oil. However, it seems clear that there was a considerable production upon the Pioch during the period. Making due allowance for the factors pointed out by plaintiff and resolving every reasonable doubt against defendant, it still seems probable that an average of at least 30 shafts per hour (including the lunch period) were produced on the Pioch machines, and I have therefore prorated the production on that basis. Schedule A, attached to this report, shows the yearly production of shafts of the three types; Schedule B is a computation apportioning Pioch and Walcott production according to the method adopted here. The resultant total production of camshafts during the accounting period is as follows: Model T, 3,420,166; Model A, 4,306,504; Tractor, 275,664.

IV. PROFITS.

Under the law, defendant is obliged to account to plaintiff for all profits, gains, and advantages realized from infringement, the defendant being treated in this respect as a trustee *ex maleficio* of the profits derived from its wrongful act of appropriating another's property. (See *Computing Scale Co. v. Toledo Co.,* 279 Fed. 648, C. C. A. 7, 1921.) In determining these profits, the inquiry is directed to two main questions: First, what profits, if any, were realized from the use of the infringing machines? Second, what part of the profits so realized is legally attributable to the plaintiff's patented invention, and what part, if any, is attributable to other elements incorporated in the infringing machines. In general, the burden of proof on both of these issues rests upon the plaintiff, although under certain circumstances it may shift to the defendant.

A. PROFITS FROM INFRINGEMENT.

1. Standard of Comparison.

In cases of this kind, where the infringement consisted in the use of a patented machine or process, rather than the manufacture and sale of a patented thing, defendant's profits are measured by the savings accruing to it from the use of the infringing machine or process as compared with what it would have cost with the best alternative machine or process available to accomplish the same result. The issue in such cases was stated in *Mowry v. Whitney,* 81 U. S. 620, 650, 20 L. Ed. 860 (1872), as follows:

> "What advantage did the defendant derive from using the complainant's invention over what he had in using other processes then open to the public, and adequate to enable him to obtain an equally beneficial result? The fruits of that advantage are his profits."

The principle was recently stated in similar language by our Circuit Court of Appeals in *Horvath v. McCord, supra* (p. 330). It seems obvious that, other things being equal, the real benefit to a party from using a patented contrivance is the saving in cost of such use as compared with the cost of what he would otherwise have been obliged to resort to. Further decisions of the Supreme Court affirming this principle are as follows: *Littlefield v. Perry,* 88 U. S. 205, 22 L. Ed. 577 (1875); *Mevs v. Conover,* 23 L. Ed. 1008 (1877); *Black v. Thorne,* 111 U. S. 122, 28 L. Ed. 372 (1884); *Cawood Patent Case,* 94 U. S. 695, 24 L. Ed. 238 (1877); *Tilghman v. Proctor,* 125 U. S. 136, 31 L. Ed. 664 (1888); *Sessions v. Romadka,* 145 U. S. 29, 36 L. Ed. 609 (1892).

The savings or advantages from infringement found by this method bear no necessary relation to the profit derived from the defendant's general business. The cases hold that even though he realized large profits from his business as a whole, if he could have accomplished the same result by another method no more expensive than the infringing one, he is chargeable with no profits; while, conversely, defendant must account for the savings from the use of the patented invention even though its business as a whole was conducted at a loss, or even though the infringing operation itself was a useless or non-profitable one. (See *Cawood Patent Case, supra.*)

In applying the rule for determining profits from use, the first problem is the determination of the proper standard of comparison, or the alternative machine or process by reference to which savings are to be judged. The differences in the conclusions of the parties as to the profits of defendant here is largely attributable to a difference in choice of the standard of comparison. Consequently, the issue is probably the most important one in the case.

Certain rules as to what is required for a good standard of comparison have been laid down by the courts. The standard selected must have been available to the defendant at the time of infringement and capable of producing an equally beneficial result. *Black v. Thorne,* 111 U. S. 122, 28 L. Ed. 372 (1884); *Producers' & Refiners' Corp. v. Lehmann, supra*; *Cambria Iron Co. v. Carnegie Steel Co.,* 224 Fed. 947 (C. C. A. 3, 1915); *LaCross Plow Co. v. Van Brunt,* 220 Fed. 626 (C. C. A. 7, 1915). If the result cannot be obtained in any other way than the patented method, the patentee is entitled to all the profits derived by defendant from the sale of the thing made by the infringement. *Western Glass Co. v. Schmertz Wire Glass Co.,* 226 Fed. 730 (C. C. A. 7, 1915); *Novelty Glass Co. v. Brookfield,* 170 Fed. 946 (C. C. A. 3, 1909). (However, see *Pressed Prism Glass Co. v. Continuous Glass Prism Co.,* 181 Fed. 151, C. C., Pa., 1910, where in such a situation the court computed the difference in the value of the product obtained by the infringing and the alternative processes.)

A machine developed after infringement cannot be used as a standard of comparison. *Novelty Glass Co. v. Brookfield, supra*; *Union Electric Welding Co. v. Curry,* 279 Fed. 465 (C. C. A. 6, 1922); *Knox v. Great Western Silver Mining Co.,* Fed. Cas. No. 7907. Whether the machine proposed as a standard must have been in existence prior to the time of infringement is a disputed question, which will be considered hereafter.

The standard of comparison must be the least costly of the alternative machines available, and where plaintiff has failed to select the best standard and there was no evidence in the record from which costs can be computed upon it, the award of profits has been denied. *Empire v. DeLaski,* 281 Fed. 1 (C. C. A. 2, 1922); *Dunkley Co. v. Central California Canneries,* 7 F. (2d) 972 (C. C. A. 9, 1925). The

presentation by defendant, however, of several alternative standards of comparison, where the costs have been computed upon each to show a loss has been approved by the courts. *Carson v. American Smelting Co., supra.*

Although it appears most usual for the standard of comparison to be the machine or process actually used by defendant for the purpose prior to infringement, this is not required, as the cases hold that the defendant can take advantage of another machine which could have been used at less cost. *Tilghman v. Proctor, supra*; *Locomotive Safety Truck Co. v. P. R. Co.*, 2 Fed. 677 (1880).

Obviously, it is often difficult to decide what machine should be adopted as the standard of comparison; and the question has resulted in a sharp dispute here. There is no dispute about the proper standard for Model T production: the Ford shaper was used to machine the Model T shaft over a ten-year period preceding the infringement; it produced a result substantially equivalent to that produced by the Walcott lathes; and from cost standpoint, it was evidently at least as good as any of the other non-infringing machines available at the time and much superior to the grinder. It is agreed that the Ford shaper is the correct standard for the Model T. The difficulty arises with the Model A and tractor camshafts, because of the fact that, in order to obtain improved engine performance, the diameter of the bearings was made considerably greater than that of the cams. As a result the shaper in its original form could not have been used to machine these shafts, because of interference between the center and one of the end bearings and the apposite cutting tools of the shaper. Defendant's witness Herklotz testified on the main trial that the Ford cam shaper could not have been used on the Model A or tractor shafts. Plaintiff accordingly claims that the shaper was not available for the production of these shafts, and adopts the grinder as the standard upon which its accounts are based.

While it is clear that the grinder was an available method of machining the Model A and tractor camshafts, defendant attacks it on the ground that much less expensive machines, including the shaper, were available to it for that purpose. It is claimed that the shaper could have been used by making alterations in its design or in the design of the

camshaft, obvious to any skilled mechanic and resulting in an equally good product; and several methods of accomplishing this have been presented. In addition, defendant proposes three other machines as standards of comparison, the use of any one of which, it is claimed, would have been less expensive than the grinder, as follows:

1. The Westinghouse lathe (a machine which was the subject of considerable discussion in the main trial of the case).

2. The modified Walcott machine with a non-tilting tool, for Model A production.

3. The Pioch machine, for Model A production subsequent to May 13, 1930.

In view of the fact that the problem for tractor production is different from that of Model A and some of the proposed standards do not apply to the former, I will consider first the question of the proper standard for the Model A shaft.

a. Standard for Model A Shaft.

(1) Pioch and Modified Walcott Machines.

The last two machines suggested can be considered first, since I am of the opinion that neither is an acceptable standard of comparison. The modified Walcott machine is embodied in a patent issued July 5, 1927 (prior to the commencement of Model A production), and differs from the original in that the tool is fixed in a vertical bar which is attached at the end to two parallel arms (one of which contacts the master overhead cam), with the result that the entire tool moves up and down in a parallel position instead of pivoting upon an axis. Although a constant angle between tool and work is not obtained with the parallel type head, the variation is not great enough to result in inefficient cutting. The Walcott Company began to manufacture machines of this type in 1929 to avoid the effect of the decree of infringement against it, and according to testimony of its engineer, no decrease in speed or increase in selling or maintenance costs resulted. The development of the Pioch machine has been previously outlined. The first one was placed on the production line on May 13, 1930, and five more added between December, 1930,

and February 4, 1931; and they proved to be much faster than the Walcotts. Defendant claims that by comparison with the modified Walcott lathe after July 5, 1927, or the Pioch after May 13, 1930, it realized no profits from its infringement.

Plaintiff claims that neither of these machines can be used as a standard of comparison because they were not in existence at the commencement of the infringement, but were designed during infringement to avoid its effects. Defendant contends that the law does not make such a requirement, and that, in any event, the modified Walcott lathe was available during the entire Model A production, which was a separate infringement from the Model T and tractor production.

The authorities are not entirely clear on the question of when a machine must be developed to be a good standard of comparison. The general rule, as stated above, prohibits the use of a machine developed after infringement. At least one case, following early dicta of the Supreme Court, has held that the standard must have been in existence before the date of issuance of the plaintiff's patent. *Turill v. Illinois Railroad Co.*, 20 Fed. 912 (C. C., Ill., 1880; affirmed 110 U. S. 301, on grounds eliminating this as an issue). Later cases more logically have held the date of invention controlling, on the ground that the infringer could have resorted to any machine developed before infringement, if the necessity had appeared. *American Pneumatic Co. v. Snyder*, 241 Fed. 274 (D. C., N. J., 1917); *Columbia Wire Co. v. Kokomo Co.*, 194 Fed. 108 (C. C. A. 7, 1911). (See also *Philadelphia Rubber Co. v. Reclaiming Works*, 277 Fed. 171, C. C. A. 2, 1921, where the court said, "The field of selection of process which might be used should be, in principle, that which is open to the art at the time the invention is appropriated.")

The courts holding the latter view, however, have split in turn on the question of whether a machine developed during infringement may be used as a standard. In *Expanded Metal Co. v. General Fireproofing Co.*, 247 Fed. 899 (D. C., Ohio, 1917), the court held it could not. (This rule was approved in dicta by the lower court in the *Pennsylvania Rubber* case, *supra*, 276 Fed. 600, and apparently followed in *National Carbon Co. v. Richards*, 85 F. (2d) 490

(C. C. A. 2, 1936), where a machine placed on the market a year before the termination of infringement was rejected as a standard.) On the other hand, in *Minerals Separation v. Butte Mining Co.*, 274 Fed. 878 (D. C., Mont. 1921), the court held that the field of selection of processes was on a day-to-day basis, and that the standard of comparison need not have been in existence at the commencement of infringement. (*Cf. Novelty Glass Co. v. Brookfield, supra,* where plaintiff claimed no profits for the period subsequent to the acquisition of rights to a superior machine.) It would seem that this is the fairer rule (provided allowance is made for the cost of the change-over), since the defendant could shift to an improved machine developed during infringement.

I think, however, that further discussion of this issue would not be profitable, since I feel that both of these proposed standards should be rejected on other grounds. As to the Piochs, the evidence indicates that they were constructed by defendant to replace the Walcotts as rapidly as could practically be done, in order to avoid piling up liability for infringement. A single machine was first constructed for testing purposes, and, as soon as it was found successful, the remaining five were ordered on a rush basis and installed as soon as completed. Consequently, the Pioch machines, from every practical standpoint, were not available until the time they actually replaced the Walcott lathes, and cannot be used as a standard of comparison.

With the modified Walcott lathe, the serious question is whether it avoids infringement of the plaintiff's patent. The essence of the plaintiff's invention has been found by the courts to relate to the tilting or oscillation of the tool to maintain a proper cutting angle. The claims which have been upheld variously describe means for "varying the angular relation of the tool to the work," for "swinging" the tool, and "tilting" it. The tool of the parallel head type Walcott does not tilt or pivot upon an axis. However, it does retain a vertical back and forth movement under control of a cam, in addition to the reciprocating movement, for the same purpose of maintaining a proper cutting angle as with the original. This movement can fairly be described as an oscillatory one; and it can also be considered a swinging one; for while the term "swinging"

ordinarily connotes movement about an axis, it is also defined as "oscillation" or movement "to and fro." (See *Webster's New International Dictionary,* Second Edition.)

While this issue, raised incidentally in the accounting, might well be the subject of a separate lawsuit, it would, in my opinion, be giving undue significance to a seemingly trivial difference between two machines to hold the original Walcott lathe infringing and the modified one not; and I think the adaptation sufficiently comes within the language of the claims of the Gordon patent, reasonably interpreted, to hold that if the original one infringes the modification does also. My conclusion is reinforced by the fact that the same conclusion was reached by defendant's chief tool designer, Pioch, after inspecting the parallel head Walcott in 1929 as a possible method of avoiding infringement and that it was thereafter adopted by defendant. Consequently, this machine is not a good standard of comparison.

(2) Westinghouse Lathe.

The Westinghouse lathe was developed by the Westinghouse Electric & Manufacturing Company about 1909; and was used to machine the cams on some 3,000 camshafts for the Chalmers and Bergdoll automobile engines in 1910 and 1911, and some 40,000 shafts for its own farm lighting outfits (of one and two cylinders) from 1917 to the time of this accounting. Its method of operation is relatively simple, the machine being a lathe, with a master camshaft in the rear, in which each tool is moved straight in and out (to produce the desired shape in the work) under pressure of the master cam contacting a follower bar mounted rigidly on the same shaft as the tool, the shaft being held tightly against the master cam by pressure of a spring. As there is no tilting of the tool, the angle of presentation of the tool to the work varies considerably as it cuts around the nose of the cam, and relatively sharp clearance angles are necessary to give the tool proper clearance. The work cam is substantially a replica of the master, with a slight deviation in contour, due to the use of a slightly blunt-nosed follower and a knife-edged tool, this variation making necessary the use of a developed master cam slightly fatter around the nose than the cam produced by turn-

ing. So far as is known, a machine of this type has never been used outside the Westinghouse plant, although several instances of such use to turn eccentric cylinders are known.

There has been a great deal of debate between expert witnesses throughout this case on the question of the practicability of the Westinghouse lathe for cutting cams. Experts called by plaintiff claim that the machine disregards the fundamental principles of cutting metal by permitting wide variation in the cutting angle of the tool, causing it to scrape the metal off on one side and requiring unduly sharp clearance angles for proper tool support, which difficulties are accentuated with a sharp-pointed cam of the Ford type. It is further claimed that unequal pressure of the followers on the nose of the master cams tends to throw the master and work shafts out of synchronism. Support for these claims is found in the testimony of defendant's witness Oberhoffken, the designer of the Ford cam shaper, who rejected that type of machine in 1913 because of the clearance angles required. On the other hand, other witnesses testified that the Westinghouse is an entirely practicable production machine for cutting cams; and it has been used successfully in the Westinghouse plant for that purpose for many years. While the Court of Appeals in this case stated that "* * * the product of the [Westinghouse] machine was far from perfect and * * * its use was abandoned after cutting a comparatively small number of shafts," the court must have been referring to the 1909 machine, as the 1917 one has never been abandoned.

No evidence was submitted here as to the speed of production attained on the machine in the Westinghouse plant; but for the purpose of showing the production which could have been obtained on the Ford shafts, defendant constructed an attachment based on the Westinghouse blueprints but adapted to machine the Model A camshaft, and mounted it on a standard Reed-Practice lathe dating back to the infringing period. The tools were fabricated from cutting metal of a composition in use at that time. Defendant made two one-hour test runs of Model A shafts on this machine, turning them at a faster rate than that obtained with the Walcotts. On the basis of this evidence, together with expert testimony that the machine could

have been constructed as cheaply as the Walcott and would have been simpler and less expensive to maintain, defendant contends that by reference to the Westinghouse machine it made no profits from its infringement.

In constructing the Ford-Westinghouse attachment, certain departures from the original Westinghouse design were made to adapt it to the Ford shaft and to increase its speed of production. Among the refinements incorporated in the machine for the latter purpose were a quick-acting steady rest, quick-acting tailstock, a rack and pinion mechanism to retract the tools for rapid loading, and a stop mechanism for making a double cut on the cams. All of these devices, it appears, were known to machinists at the time of infringement, although they were rarely, if ever, brought together in one machine. A further change resulted from the use of a production camshaft for the master shaft to save expense, which made it necessary to secure in the work an exact replica of the contour of the master cam. As a knife-edged follower (which would have accomplished this result) would have been impracticable, the design of the tool was modified so that the profile of the cutting edge formed an arc of a radius identical with that of the follower, making the point of contact of tool and work shift in synchronism with the movement of the point of contact of the follower and master cam.

Consideration of this machine as a possible standard of comparison leads to the question of whether it can be used as such in view of the fact which appears from the record that defendant knew nothing of its existence during infringement, even when it was searching for a substitute for the Walcott lathes. In *Reed Roller Bit Co. v. Hughes Tool Co.*, 12 F. (2d) 207 (C. C. A. 5, 1926) (a case of willful infringement), it was held that a device patented prior to infringement but not known to the defendant while infringing could not be a standard of comparison, the court distinguishing the problem before it from that of anticipation of a patent, where lack of knowledge is immaterial. However, the plaintiff has conceded that the Westinghouse machine was available to the defendant.

Plaintiff's chief attack on the Westinghouse lathe as a standard of comparison centers around the changes made in the Ford adaptation. It is contended that it is improper

to present a standard with many changes from the original which increase its speed. More emphasis, however, is placed upon the change which results in a replica of the master cam being formed in the work, which, it is claimed, alters the principle of operation of the machine. Whether this is so, the tool as thus modified has an edge with little support which chips easily, resulting in alteration of the shape of the cam. The only test of a shaft turned on the machine was made by Gordon, who showed that the cams were not properly aligned and the shaft would have to be scrapped. While this may have been due in part to the soft metal of the production camshaft used as the master, it seems clear that the modification which makes the contour of the master and work cams identical results in a machine which is not a practicable production proposition and which would not have been used by defendant in production.

Does the rejection of this change made by defendant as impracticable eliminate the Westinghouse as a standard of comparison? The original machine worked satisfactorily at the Westinghouse plant; and defendant could readily have developed a master shaft which would permit the use of a tool of the original form, except for the steeper clearance angle required. Plaintiff does not claim this would not work, but claims the speed obtained would have been less than with the grinder. Plaintiff claims the Westinghouse blueprints show that in using the machine the company left a large surplus stock on the nose of its cams, which it had to remove by grinding or some other process. While I do not agree with plaintiff's interpretation of the Westinghouse blueprints, I think for another reason the Westinghouse machine must be rejected as a standard: there is not sufficiently reliable evidence of the speeds obtainable with it in actual production. There is virtually no evidence of the speeds on the machine in the Westinghouse plant. It seems clear they must have been very slow, because of the absence of the speed-boosting features added by Ford to the machines. The production problem of manufacturing approximately 2,000 camshafts per year at Westinghouse is quite different from that of turning out the Ford production averaging upwards of a million. As to the demonstration runs on the Ford-Westinghouse ma-

chine, even if the speeds obtained were identical with what would have been secured if the original tool form had been used, still these were in the nature of laboratory tests of the machines, which are not a reliable guide to production obtainable under production conditions. Nearly any machine can be pushed for short periods far beyond the speed at which it is normally run. Therefore, although it is possible that an adapted Westinghouse would have turned out the Ford production in a satisfactory manner faster than the Walcott lathes, I do not think the evidence as to that is clear enough to permit its use as a standard of comparison.

(3) Ford Cam Shaper.

Defendant presents several ways in which the Ford shaper or the camshaft could have been adapted to permit the use of the shaper on the Model A shaft, despite the enlarged bearings, which, it is claimed, is perfectly permissible under the law relating to standards of comparison. The principal methods can be summarized as follows:

1. A machine (designed under the direction of defendant's engineer Pioch) constructed like the original shaper, except that the two interfering tools are mounted in an attachment at the front which is connected with the driving mechanism in such a way that the tools machine the cams by pursuing them at twice their speed and overtaking them on the same stroke on which the other tools cut.

2. A machine which differs from the original shaper chiefly in that every other tool is mounted to cut in the opposite direction of the one next to it. Additional changes make the two strokes of the ram of equal duration; and the tools are individually relieved on the non-cutting stroke, instead of being relieved in a body. (This adaptation was originally designed by Oberhoffken, the designer of the shaper, around 1919 to machine the tractor cams, but was never built because tractor production was too small to warrant the construction of special machinery.)

3. A modification of the shaft, in which the length of the center and end bearings is reduced to provide additional space eliminating tool interference, and in which the diameter of the bearing is either increased or additional ones added to provide as much bearing surface as on the original shafts.

4. A modification of the shaft in which the end bearing is attached after the remainder of the shaft has been machined.

Defendant further contends that even if none of the above methods are considered available during the infringement, the shaper at least could have been used on the Model A shaft in a less efficient way, but still less expensive than the grinder, with no appreciable change in the design, by simply removing four of its tools and using two shapers to machine the shaft, turning the shaft end for end on the second one.

Evidence was submitted by defendant showing that it is routine practice in its plant upon change of car models or of parts to redesign existing production machinery to adapt it to the new parts. A large staff of tool designers is employed by defendant for this purpose and to design new special production machines. Thus, when the change was made from the Model T to the Model A automobile, approximately five hundred production machines were modified. At that time, changes were made in the Walcott lathes, particularly in the form of the overhead cams, to fit them to the Model A camshaft. Similarly, when defendant changed from a four to eight cylinder motor, the Pioch cam millers had to be altered. It also appears to be common for defendant's engineers to alter the design of automobile parts to facilitate production. On the basis of the evidence, defendant contends that it is not reasonable to suppose that in machining the Model A cams it would ever have gone back from a speedy machine like the shaper to the slow and expensive grinding method.

Plaintiff submitted no evidence on the practicability of the modifications in the shaper proposed by defendant, but rather relied on the aforementioned testimony of Herklotz that the Ford shapers could not have been used on the Model A or tractor camshafts. Plaintiff contends that defendant should not be allowed to shift its position on the accounting; that, further, the modified shaper cannot be considered an acceptable standard of comparison because it was not represented by a completed machine at the time of infringement; and, finally, even if it were a good standard, costs of production upon it cannot be computed from the present record.

The question of whether, and to what extent, modification of an available machine is permissible in a standard of comparison is a difficult one. The practical factors on either side can readily be seen. On the one hand, it is difficult to know whether the modified machine would work satisfactorily in actual practice, whether the change would have occurred to mechanics at the time of infringement, and precisely how costs would be affected by the modification. If too much liberality were to be allowed, a wide field would be opened in patented accountings for speculation as to how existing devices could be adapted for new uses and to get better results. Human ingenuity can always conceive of ways of improving methods followed in the past; and infringers caught with a decree against them may be expected to be much more adept than at the time of infringement in thinking up other methods which might have served their purposes as well. On the other hand, there is equal danger in not permitting modification in that an infringer may be mulcted in a large recovery of profits, when a simple adaptation of a machine available from the start of infringement would have rendered it as advantageous to him as the infringing device. Very often, changes in dimensions of a machine are necessary to adapt it to a particular work, yet no one would think of objecting to a machine on that ground alone. Plaintiff, in fact, does not claim that the necessity of a change such as that made in the overhead cams of the Walcott machines to adapt to it the Model A would be cause for rejecting it as a standard. It would be unrealistic not to recognize the frequency with which modifications in existing machines for special purposes are made in actual practice.

It is surprising that there are so few cases on the question thus encountered. The leading case is the decision of our Circuit Court of Appeals in *National Tube Co. v. Mark*, 10 F. (2d) 430 (C. C. A. 6, 1929). There the defendant relied for a standard of comparison upon a machine not regarded as usable during the infringing period and which would not have been usable except for changes not completed until after the termination of infringement, the modified machine being demonstrated on the accounting. The court, finding that the modified machine was practicable, held it a good standard of comparison on the

ground that the same mechanical ability which was later developed would have appeared had the defendant been forced to turn to some other than the infringing machine. A similar decision was reached in *Oneal v. San Jose Canning Co.*, 33 F. (2d) 892 (C. C. A. 9, 1929), where a modification of a device made by one of defendant's employees prior to the infringement and used experimentally at that time, and which was used in production after an injunction was issued, was held to be a good standard of comparison. In *Brown v. Lanyon Zinc Co.*, 179 Fed. 309 (C. C. A. 8, 1910), a modification in use, rather than design, of an existing machine was approved, the court adopting as a standard of comparison for roasting zinc a furnace which had previously been used only for heating copper, but which was found adaptable to the former use. Reference should also be made to *Columbia Machine Corp. v. Adriance*, 79 F. (2d) 16 (C. C. A. 2, 1935), where it was suggested that a machine developed after infringement, if sufficiently obvious, might be a standard.

Two cases are cited by plaintiff in opposition to the rule contended for by defendant. In *Expanded Metal Co. v. General Fireproofing Co., supra,* the District Court stated that the standard must have been in existence in its completed form prior to the time the infringer appropriates the patented process. However, the court there was not dealing with the modification of a process in use prior to infringement, but rather with a process which was in its experimental stages until after infringement. In *Philadelphia Rubber Co. v. Reclaiming Works, supra,* the District Court, citing the *Expanded Metal* case, rejected a process known before infringement, but which was a mere paper process then and not used advantageously until after infringement, on the ground that a modified process was not a proper standard of comparison. The decision on this point was affirmed by the Circuit Court of Appeals on grounds not entirely clear. The statement of the court in its broad form seems inconsistent with the rule in this circuit in the *National Tube* case, although it is possible the two cases could have been distinguished on their facts.

The rule which in principle seems correct and which is in harmony with the weight of authority and with the *National Tube* case would seem to be that a modification of

a machine available in its original form at the time of infringement is acceptable as a standard of comparison under certain limitations, as follows: (1) the modified machine must be workable; (2) the modification must not represent a radical departure from the principle of operation of the original or involve inventive genius itself; and (3) the cost of doing the work on the modified machine must be capable of calculation with reasonable certainty. It seems clear in this circuit that the mere fact that some modification must be made to adapt it to the work done by the infringing machines is not a fatal objection to the machine as a standard of comparison.

Considering the evidence here, I am convinced that, with the only problem being one of bearing interference, defendant could have adapted the shapers for use on the Model A shaft; and the probability is very strong that it would have done so if it had continued to use the shapers until the time of the changeover to Model A production and if the Walcotts had not been available at that time. The modification adopted would probably not have taken the precise form of those suggested here, but some practicable modification along the lines here suggested could almost certainly have been accomplished.

The method proposed by defendant of using two shapers to machine each shaft, four cams being shaped on each, would certainly have worked, and would have involved very little change in the design of the original machine. Costs by this method can be computed on this record with reasonable accuracy, since they would be approximately double (or slightly less) the costs of the shaper of the original design. At the same time, they would still be substantially less than with the grinder; consequently, if all other standards proposed by defendant for the Model A should be rejected, the double shaper method should be used in preference to the grinder.

However, I am sufficiently convinced of the practicability of the modifications of the shaper which permit the Model A shaft to be machined in a single operation to adopt that type of machine as the standard of comparison for that shaft. The problem to be overcome in adapting the shaper to the Model A shaft does not seem to be one of unusual difficulty. Careful inspection and scrutiny

of the proposed modifications disclose no reason why if the original shaper would work they should not also; nor do they seem to be especially ingenious or change the principle of operation of the machine. These conclusions are reinforced by the testimony of Oberhoffken, Brush, and Pioch, which was not controverted. The strongest evidence against them is the fact that in 1929 when defendant was casting about for a substitute for the Walcott lathes it gave no consideration to the shaper but instead experimented with the development of a new type of machine. However, the problem was not presented to it then in the same form as it would have been if it had used the shapers through the Model T production and was trying to find a method for machining the new Model A shafts. The testimony of Herklotz on the infringement trial also tends to mitigate against the use of the shaper as the standard of comparison for Model A production, but, while this has caused me some difficulty, I do not think defendant should be precluded by the testimony of one of its employees from showing the true facts with respect to the use of the shapers.

I do not think it necessary to pick out a particular form of modification to be used as the standard; but, if it should be thought necessary to do so, I would select the one suggested by Oberhoffken. It should be noted that the choice of the modified shaper as a standard of comparison does not involve the adoption of a machine not in existence at the time of infringement, but rather one which was commercially used for ten years before the infringement adapted to perform a particular type of work on which it could have been used, had the necessity appeared. This is in full accordance with the principle of *National Tube Co. v. Mark, supra.*

Some difficulty is involved in determining costs on the modified machine, since, other things being equal, it is probable that with either form proposed here or any other form which could have been adopted for the Model A shaft costs of operation would be somewhat increased over the original form. However, I think due allowance can be made for that factor. In my opinion, the court should resolve here to avoid the one result which seems certainly unjust of using the grinder as a standard of comparison on the

Model A when there is little likelihood that the defendant would ever have been forced to use it. Doubts as to speed and costs of the standard can be resolved against the defendant. This is in line with the approach taken by the Supreme Court in the recent case of *Sheldon v. Metro-Goldwyn Pictures Corp.*, 309 U. S. 390 (1940) upon a related problem in an accounting case.

The record is less satisfactory with respect to the modification of the Model A shaft to permit a shaper of the original design to be used in machining it. The practicability of changing the design of the shaft has not been as thoroughly explored in the trial as the practicability of adapting the shaper itself, and the effect of the changes upon the design and cost of the automobile engine is not clear. At least one of the methods originally proposed—the one involving the use of a detached end bearing—was later rejected as impracticable by defendant's own engineer, Weyl, and in fact would require the production of an extra part and numerous extra operations. Similar objections can be made to the other modifications presented, which, however, I believe it unnecessary to state here. I accordingly think the modified shaper is to be preferred to the modified shaft in the selection of the standard of comparison.

b. Standard for Tractor Shaft.

The choice of standards for the tractor camshaft is between the Westinghouse lathe, the shaper and the grinder. The Westinghouse machine should be rejected for the same reason already stated with respect to the Model A shaft. As to the shaper, the mechanical problem in using it is the same as with the Model A (the situation with respect to bearing interference being identical); however, the production problem is very different.

The grinder was used continuously to machine the tractor shaft until the purchase of the Walcott lathes, except for a brief interlude in 1923 when the Gordon machine was experimented with but rejected. During this time, the defendant was receptive to a less expensive method of doing this work. Oberhoffken designed his modification of the shaper for this purpose, but it was not built because it was felt that the production of the tractors was too small

and its future too uncertain to warrant the construction of special production machines. While such machines were perfectly feasible for the tremendous Model A production, the testimony of witnesses called by the defendant itself indicates that at no time did tractor production become great enough or its future sufficiently certain to justify the construction of a special shaper for them. A good deal of work beyond Oberhoffken's rough sketches would have been necessary before blueprints could be completed and the machines ordered; they would no doubt have been considerably more expensive than the Model T shapers; and it would have been difficult to find a use for them if tractor production were discontinued, since the shaper inherently is not an adaptable type of machine. The purchase of the ready-built Walcotts was obviously quite a different problem. I think therefore the shaper was not available to defendant within the meaning of the cases setting forth the requirements for a good standard of comparison. Despite the demand for improved machinery for the cams, defendant did not construct a modified shaper, nor did it alter the tractor camshaft. Consequently, the Landis grinder, which Ford was using and would very likely have continued to use except for the purchase of the Walcotts, should be adopted as the standard of comparison. While it is possible that the resultant savings from the use of the Walcotts are higher than the cost of constructing two shapers for the tractor the same point could be made by defendant with reference to its production in 1919 to 1924, when it continued to use the grinder, although the construction of a shaper might, in retrospect, have saved it money.

c. Effect of Choice of Incorrect Standard.

Defendant claims that if the court finds that plaintiff has selected the wrong machine as a standard of comparison it must be restricted to nominal damages for the production to which it is applicable, citing *Empire Rubber & Tire Co. v. DeLaski Co.*, 281 Fed. 1 (C. C. A. 3, 1922), and *Dunkley Co. v. Central California Canneries*, 7 F. (2d) 972 (C. C. A. 9, 1925). However, it does not appear that in those cases there was other evidence, as here, from which savings with reference to the proper standard of comparison could be ascertained. That the evidence submitted

by defendant can be used in computing the profits to which plaintiff is entitled is seen from *Producers' & Refiners' Corp. v. Lehmann, supra,* where the court rejected evidence of experts called by plaintiff estimating the cost of production and sale of oil treated with the infringing process, but, instead of dismissing the case, computed such costs from evidence submitted by the defendant. Furthermore, it would seem that the correct standard was more obvious in the cited cases than here—in view of the testimony of Herklotz in the main trial, and the fact that defendant's accounts do not state the nature of the shaper relied on as a standard, plaintiff can hardly be criticized for selecting the grinder as the standard, nor could it be expected on the accounting to think up and present methods of adapting the design of the shaper to the Model A shaft. Under the circumstances, it would seem to be up to defendant to prove the availability of the shaper for the Model A and the cost of using it.

2. Savings from Use of Infringing Machines.

The next problem is to compute the amount of the savings realized by the defendant from the use of the Walcott lathes, as compared with what it would have cost if it had used the standards of comparison instead. Under the law, the plaintiff is entitled to recover all kinds of savings from the use of the infringing machines which can be computed with reasonable certainty. If the use of the infringing machine results in savings in some items of cost coupled with losses in others, the losses are offset against the savings. The savings accountable take many different forms, depending on the nature of the particular case. There may be a reduction in labor or machine costs in the operation performed by the infringing machine itself. There may be reduced labor costs, with increased machine costs for the same operation offsetting them, or vice versa. The introduction of infringing machinery may affect other operations in the defendant's plant, either decreasing or increasing their cost or adding new operations or eliminating old ones. To mention a few examples of the kinds of savings the courts have held the patentee could recover, in *Tilghman v. Proctor, supra,* the saving was in chemical materials, and in *Williams v. Railroad Co.,* 18 Blatchf. 181,

it was found in the lower cost of using kerosene oil as compared with lard oil for locomotive headlights. In *Morgan Construction Co. v. Forter-Miller Engineering Co.*, 234 Fed. 324 (C. C. A. 3, 1916), the saving was in labor costs; and there were some operations prior to the infringing one which were added and some eliminated upon infringement, the cost of which was taken into consideration. In *Doten v. Boston*, 138 Fed. 406 (C. C. A. 1, 1905), the savings were found in the lessened repairs from carelessness resulting from the use of the patented device. In *Lawther v. Hamilton*, 64 Fed. 221 (C. C., Wis., 1892), they were represented by a greater yield of oil resulting from use of the patented process; and, somewhat similarly, in *Fullerton Walnut Growers' Ass'n v. Mfg. Co.*, 166 Fed. 443 (C. C. A. 9, 1908) in a smaller percentage of culls. Other illustrations are found in *Webster Looms Co. v. Higgins*, 43 Fed. 673 (C. C., N. Y., 1890), where the saving lay in machine costs, and in *Brickell v. New York*, 112 Fed. 65 (C. C. A. 2, 1901), where it consisted of lower fuel costs.

Mathematical exactness in computing savings in patent cases is obviously impossible, and is not insisted upon by the courts: the only requirement is that they be proved with a reasonable degree of certainty. *Fullerton v. Anderson Mfg. Co., supra*; *Doten v. Boston, supra.*

In each case, it is necessary to analyze the entire situation to ascertain which elements of the costs and revenues of defendant remain constant and which ones are altered by a change from the infringing machinery to the standard of comparison. Since in computing costs we must work with the records available, an understanding of the system of cost accounting used by the defendant here is necessary. A primary division is made in defendant's accounting practice between administrative and selling expenses, on the one hand, and manufacturing expense on the other. The former can be disregarded so far as this case is concerned; it is obvious that the use of the Walcott in preference to the shaper or the grinder would not affect selling and administrative expense, since the identical product is obtained with all three types of machines. Similarly, since the product is the same, the price and the volume of sales must be assumed to remain constant with all three machines. It may be that the substitution of more effi-

cient machinery (such as the Walcott in place of the grinder) has the effect of reducing prices as well as increasing labor costs, in view of the well-known tendency for profits from labor-saving machinery to be shared by the manufacturer with consumers and employees. However, any result of that sort is too remote and speculative for computation; no claim for a deduction on that account is made by defendant, and I know of no case which takes it into consideration. Consequently, the savings in the use of the Walcott lathes in place of the standards of comparison to machine the defendant's cams boil down to savings in the cost of production or manufacturing cost.

Under defendant's method of accounting, the process of determining its manufacturing expense is centered around the effort to determine the cost of each part going into the automobile or other machines sold by it. Its purpose in computing the cost of the part is (1) to price the finished product, and (2) to evaluate its inventory for income tax purposes. It does not use its cost accounting system to control costs of production. Defendant's plant is divided into a large number of departments, the successive operations on the camshaft taking place in several departments. At intervals (averaging about once every two or three months during the accounting period) manufacturing costs are computed for each part for a single month, the summary costs for the part being set down on a cost summary card. On these cards, the manufacturing cost is divided into three categories: (1) material; (2) direct labor; and (3) burden. Material cost is the cost of the raw stock for fabricating the part. Direct labor consists of the wages paid to the operators of the machines directly used in producing the finished part. This is determined by dividing the total time of all direct labor in the department for the month in question by the number of shafts produced, to get a minute labor cost, and multiplying the result by the average departmental labor rate to get the labor cost per unit expressed in dollars and cents. Burden includes all other manufacturing expense consisting of some thirty elements. In computing the burden cost of the part, some of its elements (such as machine depreciation) are costed directly in each department; other items, not capable of direct computation in the department,

are computed for the whole factory and then apportioned among the different departments on some recognized basis (such as relative area, direct labor, etc.), depending on the nature of the item. The total burden expense in the department is then divided by the total direct labor expense, resulting in a departmental percentage ratio of burden to direct labor, which is used in turn in computing burden cost per unit for the cost summary cards.

In its routine calculation of costs, defendant does not make any attempt to go behind the cost of the part to compute the cost of the individual operations in producing it. The only occasions (apart from lawsuits like the present one) when it becomes necessary for the defendant to ascertain the cost of such operations are (1) in evaluating the inventory of unfinished parts for tax purposes, and (2) in determining prices on the infrequent sales of unfinished parts. In computing the cost of operations for these purposes (during the accounting period, at least), unit burden costs for each part were apportioned among the various operations by using the departmental burden percentages (based on direct labor cost). (The actual procedure used to determine the cost of a part in process was to multiply the total labor and burden cost per unit in the department by the percentage of the time taken for operations already performed upon the part to the total time taken for all operations in the department, and then add to the resultant figure the cost of the material entering the department.)

In comparing manufacturing costs of using the Walcott lathes and the standards of comparison for the camroughing operation, it is obvious that the cost of the material entering the department remains constant, so this factor may be immediately eliminated from consideration. With respect to the question of scrap loss, the defendant has kept no records of scrap loss on individual machines, and no difference in this item as between the three types of machines here in question has been shown. The problem of determining comparative costs of the remaining elements —labor and burden—can be broken down into two parts: (1) determination of savings (or losses) in the cost of the operation performed by these machines; (2) determination of savings or losses in other operations which may be affected by the use of one type of machine rather than

another to machine the cams. As to the latter, it appears conclusively that no other operations were eliminated by the adoption of the Walcott lathes. Nor does it appear that the time for performing any other operations was reduced by their use. (It is possible that tolerances on the roughing operation were stepped up during the accounting period, resulting in a reduction in finish-grinding time, but there is no clear evidence to this effect which would permit a cost computation.) However, it is claimed by the defendant that the introduction of the Walcott lathes made necessary a straightening operation on the camshafts not used or required with the shaper. If so, it is clear, upon principle and authority, that the cost of performing it should be offset against any savings which may be found in the cost of the cam-machining operation itself. (See *Morgan Construction Co. v. Forter-Miller Engineering Co., supra.*) Since this question can be disposed of more quickly than the question of the comparative cost of the infringing operation itself, I will consider it first.

a. Saving or Loss in Other Operations: Straightening.

The issue as to straightening is an important one, since it is largely responsible for the difference between the loss found by defendant from the use of the Walcott lathes on the Model T shaft and the profits in excess of $40,000 claimed by plaintiff. It appears that at several points in the manufacture of a camshaft the shaft becomes slightly crooked, and it is necessary to straighten it before performing certain operations upon it. Consequently, there have always been several straightening operations in producing a camshaft, but the claim here is that an extra one immediately preceding the cam-machining operation was required with the Walcott lathes, which was not necessary with the shaper. The evidence relied upon in support of this claim can be summarized as follows: (1) the fact that such operation appears upon the only time study for the shapers in evidence taken in 1924 is omitted from a time study taken later in the year after installation of the Walcotts; (2) the testimony of Ford employees, supplemented by that of a representative of the Walcott Company, that it was found necessary to add this operation when the Walcotts were installed; (3) expert testimony that the shapers had an

automatic straightening action, due to the downward pressure of the shaper tools forcing the camshaft against the subjacent steady rests, while the pressure of the Walcott tools upon a shaft floating more freely in space had no such correctional tendency.

On the other hand, independent expert witnesses testified that straightening the shaft before machining the cams was always considered the proper practice with all types of machines. Brush and Pioch, defendant's principal experts, both testified that the necessity of straightening could have been eliminated by modification of the steady rest or the addition of other steady rests. Furthermore, it appears that the standards of workmanship in manufacturing the Model T car were raised from time to time; although there is no record of a change in tolerance for rough-machining the cams, such a change would not necessarily appear in the records.

The conclusion I draw from this and other evidence not detailed here is that while the use of the Walcott lathes may have been the occasion for adding the straightening operation, it was not the underlying cause for doing so, the operation being rather attributable to improvement in defendant's standards of workmanship. Under the testimony of its own witnesses, defendant could have made the Walcotts exactly like the shapers with regard to the necessity of straightening by simple changes with respect to steady rests, but it preferred instead to adopt the straightening operation, which was undoubtedly the better practice. If the extra straightening operation was in fact attributable to the difference in machines, it is indeed difficult to see why the defendant upon discovery of that fact did not reject the Walcott machines instead of buying more and then discarding the shapers. I therefore reject this operation as an element of the cost of using the infringing machines, not on the ground that it was not added upon their installation (because I think it was), but rather on the ground that its addition was not attributable to differences between the two machines. I recognize the rule that an infringer need account only for actual and not reasonable profits (*Tilghman v. Proctor, supra,* and many other cases); but in making a comparison between two types of machinery similar factors on both sides should be kept con-

stant, and the actual operation of the infringing machines should not be weighed against a theoretically ideal operation of the standard of comparison.

This conclusion becomes much clearer with the Model A shaft, because of its greater weight and rigidity and the fact that the modification of the shapers presented by defendant for that shaft differ from the original with respect to the pressure tending to correct a bowed shaft. It is to be noted that no claim of such a deduction has been made with regard to the grinder.

b. Savings in Cam-Roughing Operation.

(1) Direct Labor Savings.

The problem of savings is therefore resolved into the question of what savings, if any, were obtained in the cam-roughing operation itself from the use of the Walcott lathes. The first type of cost to be considered is direct labor. To determine the direct labor cost of turning out the infringing production on the various machines, it is first necessary to know the average speed at which the operator could machine camshafts on each type of machine. With this information plus a knowledge of the wage rates paid to the operators and the total production of camshafts during infringement, total direct labor costs with each machine can be readily computed. Average departmental wage rates are either shown directly on records available or have been closely estimated for all the months of infringement; and, since a uniform wage rate for productive labor prevailed in the department in which the infringing operation was performed, their use results in substantial accuracy. It affirmatively appears from the record that the wage rate would be identical with the Walcott machines and the standards of comparison. The direct labor costs of the various machines are therefore inversely proportioned to their speeds of production, with adjustment made for the fact that one man operated two shapers or Walcott lathes but only one grinder.

The determination of the average rate of production of each machine is a matter of some difficulty. Defendant has not kept permanent records of the actual rate of production obtained on the individual operations in producing the part. (It appears that daily rates of production for the

Walcotts were recorded on blackboards for at least part of the period of infringement, but were erased the next working day.) Throughout a large part of the accounting period stop watch time studies of the operation of its machines were made by defendant from time to time as a guide to its foremen, which studies show the expected rate of production; but these have not been systematically retained and only a few are available for the machines in litigation. As might be expected, the rates of production shown by the time studies do not always coincide with actual speeds of production, as is shown by production records for the complete camshaft. A complete analysis of all the evidence on rates of production would be impracticable here. The difficulty of fixing them is well illustrated with the Pioch machine, where a time study in 1931 gave their speed as 42 shafts per hour and a production specification the same year as 75, while the consensus of recollection of witnesses fixed it at 55 to 60.

(a) Speeds of Production on Model T Shaft.

The figure of 25 camshafts per machine per hour or 50 per operator per hour is agreed upon as the most nearly accurate figure for the average speed of production of the shaper on the Model T shaft. This figure is shown by a stop watch time study in 1924 and other production records of the defendant, and was also testified to by witnesses, although some witness gave the production rate as 20 per machine hour.

There is sharp dispute about the rate of production of the Walcott machines on the Model T shaft, 37.5 and 35 shafts per machine hour being adopted by plaintiff and defendant, respectively. The former figure is shown upon an operation sheet of defendant showing productive capacity, dated March 16, 1925, and apparently taken from an earlier production and machine specification, which records, according to the testimony, were based upon a careful study of the situation. There is a good deal of evidence tending to support a speed of 35 or slightly less. This figure is given by a stop watch time study taken in October, 1924, just before removal of the machines to the Rouge plant; and it is also shown by a study by the purchasing department of the actual operation of the machines at Highland

Park over a period of a number of weeks. A Walcott engineer calculated the probable speed, on the basis of the machine cycle, at only 32.5 shafts per hour. The guaranteed production of 45 was based upon 100% efficiency from the machine running in a high gear, which was never used by defendant in production. The testimony of Ford employees based upon recollection also tends to support the 35 figure.

On the other hand, there is some evidence tending to support a much higher speed, up to 58 per hour in the later years of Model T production, resulting from the use of faster motors. It seems probable under the evidence that the speeds were increased after removal to the Rouge plant, although, of course, it would hardly be fair to consider increases resulting from external factors, such as improved conveyors, which would operate to increase shaper speed as well. If the evidence is equally balanced between 35 and 37.5, I think the latter figure should be used, in view of the fact that many of the records of defendant which would help to clear up the question are missing. Moreover, the higher of two possible shaper speeds was adopted, and the absolute speed of the two machines is not as important in comparing costs as the differential between them. Under all the circumstances, I think the figure of 37.5 shafts per machine hour or 75 per man hour is conservative and should be adopted by the court.

(b) Speeds of Production on Model A Shaft.

The Model A shaft was the same length as the Model T, but was thicker and approximately twice as heavy. The cams were of the same width, but had a more pronounced lift on the nose and a slightly larger base circle. The steel in the shaft was of slightly harder composition. On the question of the rate of production attained with the Walcott machines on the Model A shaft, there is comparatively little record evidence, no reliable time study being available. The only record of value is a report prepared in 1930 from existing time studies for use in the Soviet Autostroy plant, which shows production speeds on Ford machines in even multiples of five and which states the Walcott speed as 30 shafts per machine hour. Theoretically, if the same motor were used, the Walcott lathes would turn the Model A cams

as fast as the Model T, although undoubtedly in practice the harder shaft and larger perimeter and lift would cut the speed down considerably. Handling time would be increased because of the heavier shaft. Ford employees testified that greater difficulty was encountered in machining the Model A cams with the Walcotts, and their recollection of speeds obtained ranged from 25 to 30. Plaintiff uses a speed of 32.711, computed by reducing the speed of 37.5 on the Model T shaft in inverse proportion to the increased periphery of the Model A shaft. I think, however, that there is little evidence to support that speed, and I prefer to adopt the figure of 30 per machine hour or 60 per man hour, as shown on the Autostroy report and as adopted by defendant. Again, it should be pointed out that the absolute speeds of the shaper and Walcott are not as important as relative speeds.

The question of shaper speeds on the Model A shaft is more hypothetical, since they were never used for that purpose. If there were no problem of bearing interference and a shaper of the original type could have been used, the larger cams would have probably decreased the speed of production somewhat. While there is some evidence that a wider cut on the cams could have been taken with a more rigid shaft, tending to compensate for the greater perimeter, still the same general factors which operated to reduce the Walcott speeds would no doubt affect the shaper, and probably in about the same proportion. For a shaper of the original type, therefore, the Model T speeds should be reduced for the Model A shaft by 20% (the percentage of reduction used for the Walcott lathes), resulting in a figure of 20 shafts per machine hour.

However, I think an additional reduction should be made because of the lower speeds which would probably result from the modification of the shaper to adapt it to the Model A shaft. With the Oberhoffken modification, for example, if the speed of each of the two cutting strokes was equivalent to the speed of the cutting stroke on the original, the machine time would be increased one third. While the cutting speed of the tools is not the limiting factor in the speed of the shaper, but rather the inertia of the parts upon the rapid change in velocity of the ram, it is very doubtful if the Oberhoffken or any other form of modification could have been made as fast as the original, other

things being equal. Because of that doubt, I think the speed of the Model A shaper should be reduced an additional 10%, resulting in a final figure of 18 shafts per machine hour or 36 per man hour (which is approximately 18% under the speed adopted by defendant's account, which was based upon the relative perimeters of the Model A and Model T shafts). Defendant makes no allowance in its accounts for slower speeds on the modified shaper, claiming that the original shaper was designed very conservatively and that by substitution of a light alloy ram and a stronger driving mechanism it could have stepped up the speed of the original by at least 50%. While it may be that this could have been done, I do not think that factor can be taken into consideration in determining speeds in this lawsuit. The improvements suggested were never made by defendant, even with the nine shapers ordered in 1923, although the same necessity was present for making them then as now. It is to be noted that the speed of the Walcotts could similarly have been, and later was, increased by rearrangement of the overhead cams, but no claim is made that the faster speed should be used for the accounting period.

(c) Speed of Production on Tractor Shaft.

It is agreed that the grinder produced tractor camshafts at an average rate of 8 per machine and man hour. There is a dispute, however, as to whether the rate of production on the Walcott lathes was 15 or 20 per machine hour, although the use of one or the other of these figures does not make a very substantial difference in the result. A time study in defendant's English plant showed a production speed of slightly less than 15 tractor shafts per hour, but information is not available as to motor speeds or handling methods in that plant and it seems probable that a higher rate of production was obtained in the United States. The recollection of speeds by Ford employees ranged from 15 to 25. The guaranteed production was 30. In my opinion, the figure of 20 shafts per machine hour or 40 per man hour should be adopted, which figure is very close to that which is obtained by reducing the speeds found for the Model T and Model A shafts in inverse proportion to the greater periphery of the tractor cams.

(2) Other Savings: Overhead or Burden.

The next problem is to determine the savings of defendant, if any, from infringement, in manufacturing expense other than direct labor and materials. In defendant's accounting system, all such expenses are grouped under the heading of burden. It is obvious that some burden costs—e.g., machine depreciation and repairs—will vary with the type of machinery used to perform a particular operation; and, in addition, a variety of indirect expenses may be affected. Defendant's burden costs as of the time of the trial were broken down into thirty-one different items, thirty of which are applicable to the accounting period and which I set forth here for the court's information, as follows:

> "Administrative salaries; depreciation of land improvements; depreciation of buildings; depreciation of machinery; depreciation of durable tools; depreciation of factory and miscellaneous equipment; depreciation of freight car equipment; depreciation of locomotive equipment; depreciation of power equipment; insurance; experimental engineering and designing; moving and re-arranging department; factory supervision; final inspection; miscellaneous manufacturing expense; power operations; repairs to land improvements; repairs to buildings, fixtures and structures; repairs to machinery; repairs to durable tools; repairs to factory and miscellaneous equipment; repairs to freight car equipment; repairs to locomotive equipment; repairs to power equipment; expense of tools; insurance (employees' liability and compensation); sweeping and cleaning; taxes (state, city and county); miscellaneous services for employees; timekeeping, pay rolls and factory clerical salaries."

As previously stated, some of these elements of burden are costed direct in the department and others are first costed for the whole factory and then apportioned among the departments on arbitrary bases. For the infrequent occasions when it was necessary to determine the cost of operations in producing a part, the departmental ratios of burden to direct labor costs were used to apportion burden among the operations. Records showing the breakdown of departmental overhead into its component elements for the

accounting period have been destroyed, although total departmental overhead figures are available. Permanent records have been kept by the defendant of the cost and depreciation rate of each machine purchased by it; and there are scattered records of overhaul and tool costs available. However, no systematic attempt has been made to compute individually the cost of repairs, tools, and power consumption attributable to each operation.

Plaintiff and defendant adopt two different methods of determining overhead savings in this case. Defendant uses what may be described as the breakdown method of determining them. It assumes that nearly all of the burden expenses are fixed costs, not affected to any appreciable extent by a change in machinery for the operation on the cams. Defendant's accountants consider the principal variable factors in a comparison of costs on the Walcott lathes and shapers to be those for depreciation and maintenance of machinery and tool costs; and their method has been to reconstruct from the records available the costs of each of these items on the two types of machines. Their final computation shows a slight advantage to the Walcott lathes on depreciation, which is more than offset by considerably greater expense of maintenance and repairs upon them, as follows:

	Cost on Shapers	*Cost on Melling lathes*
Model T shaft		
Depreciation	$19,248.69	$16,921.58
Maintenance repairs	8,252.10	14,853.80
Extraordinary repairs		23,579.66
	$27,500.79	$55,355.04
Loss on Melling lathes	$27,854.25	
Model A shaft		
Depreciation	$31,728.94	$27,645.49
Maintenance repairs	25,234.66	45,829.12
	$56,963.60	$73,474.61
Loss on Melling lathes	$16,511.01	
Tractor shaft	(Not calculated, but assumed to follow results with other shafts.)	

Defendant's accountants believe that costs of tools, power, factory supervision, and costs incident to housing the machines, which were not computed because of insufficient records, would have been greater on the Walcott lathes than with the shapers.

Plaintiff's accountant, on the other hand, uses the departmental burden percentages based upon direct labor to compute burden savings. Since these percentages generally run in excess of 100% for the accounting period, the burden savings found by his calculation are somewhat greater than the savings in direct labor. Plaintiff concedes that theoretically the breakdown method used by defendant is the better one, but contends that an accurate computation cannot be made on that basis because of insufficient records or other evidence of costs of the individual elements of overhead here. According to plaintiff's accountant, Mr. Moise, the kind of overhead costs which remain unaffected by a change in cam-shaping machinery constitute only an insignificant portion of total overhead. A large group of items (particularly factory supervision), not considered in defendant's accounts, are said to vary generally in direct proportion to direct labor costs. A third substantial group of which the most important is machine depreciation and repairs, are ordinarily affected by a change of machinery but not necessarily in proportion to, or in the direction of, direct labor costs. As to the latter group of costs, however, Mr. Moise believes that in this case they will average out to vary approximately in direct proportion to direct labor costs. A computation made by him of comparative costs with the Walcott lathes and shapers for Model T and Model A production (assuming the shapers could have been used on the Model A shaft) shows savings with the Walcotts of approximately $120,000. However, he considers, in view of the way defendant has kept its cost records, that overhead savings should be computed by use of the departmental burden percentages, even though they result in a smaller figure than that.

In considering the authorities on the proper method of determining savings of this type, I have found no reported patent cases where the defendant's profits were determined, as here, by the standard of comparison method which discuss the treatment of overhead savings as such, but consideration is given to overhead, if at all, only in terms of

its elements. (See, e.g., *Morgan Construction Co. v. Forter-Miller, supra,* where plaintiff restricted its claim to savings arising from a lower cost of labor, and *Carson v. American Smelting Co., supra,* where the defendant's account included a comparison of costs of a number of items which in the Ford system of accounting would be classified as burden, but which were not discussed in terms of burden.)

However, there are a large number of cases dealing with overhead where the infringement consisted of the manufacture and sale of a patented thing, rather than its use. The problem arises when (as is usually the case) the infringing business accounts for only a small part of the total business of the defendant, and where part of the overhead expenditures of the entire business are claimed as a deduction from gross profits of the infringement. The situation in those cases is in effect only the converse of that in the case at bar where the infringement was one of use: in those cases, the defendant claims a deduction for overhead expenses *increased* by infringement, while here the plaintiff claims as profits *decreased* by infringement. Consideration of them is therefore pertinent. It is significant that the claims made by the parties in those cases closely resemble those in the case at bar, one side contending that the increase in overhead from infringement was negligible and should be disregarded, while the other contends that overhead should be charged to the infringing business on the same proportion it bears to the whole business.

The general principle established by the decisions on overhead referred to is that the one claiming the benefit of overhead expenses must show, and the burden is on him to do so, what portion of total overhead expenditures were actually attributable to the infringement. *Levin Brothers v. Davis Manufacturing Co.,* 72 F. (2d) 163 (C. C. A. 8, 1934); *Haiss Manufacturing Co. v. Link-Belt Co.,* 63 F. (2d) 479 (C. C. A. 3, 1932); *Sheldon v. Metro-Goldwyn Pictures Corp., supra*; *Krentler-Arnold Hinge Last Co. v. Leman,* 24 F. (2d) 423 (D. C., Mass. 1928); Cf. *Horvath v. McCord, supra.* Usually, this involves segregation of overhead into its constituent elements, accompanied by proof showing which ones have been increased by infringement. *Levin v. Davis, supra*; *Standard Mailing Machines Co. v. Postage Meter Co.,* 31 F. (2d) 459 (D. C., Mass., 1929); *Horvath v. McCord, supra*; *Flat Slab v. Turner,*

285 Fed. 257 (C. C. A. 8, 1922). No case requires the infringer to go to the extent of proving every expenditure for overhead affected by the infringement, as this would be impossible from a practical standpoint. (See above cases and remarks of court in *Stearns-Roger Manufacturing Co. v. Ruth*, 87 F. (2d) 35 at 41 and 42, C. C. A. 10, 1936.) Overhead expenditures are rather dealt with under broad classes, analogous to the elements of Ford overhead set forth above, and each class is apportioned between the infringing and non-infringing branches of the business on some recognized accounting basis, such as proportionate direct labor costs. In cases, however, where it is found impracticable to separate overhead into its elements and treat them individually, the apportionment has been made by dividing all overhead expenses between the infringing and non-infringing branches on a recognized accounting basis, usually direct labor for manufacturing overhead. (See *Standard Co. v. Cropp Co., supra*, where general overhead was allocated between departments on the direct labor wage basis and total departmental overhead was then divided between the articles worked on in the department on the same basis; *Computing Scale Co. v. Toledo Computing Scale Co.*, 279 Fed. 648, 657-8, C. C. A. 7, 1921, where all manufacturing overhead was apportioned on a direct labor plus materials basis. With administrative and selling, as distinguished from manufacturing, expense, the basis of apportionment is usually relative gross sales of the two branches.) In some cases where the use of an overhead ratio for the whole business has seemed not to reflect accurately the actual increase in overhead from infringement, the courts have arbitrarily reduced the ratio to the point thought to represent the actual increase. (See, e.g., *Winchester Arms Co. v. American Buckle and Cartridge Co.*, 62 Fed. 278, C. C. Conn., 1894, where the court added 10% to the cost of labor and materials for the infringement in place of 26-1/5% overhead of the business in general; *Flat Slab v. Turner, supra*, pages 278 and 279.)

The courts recognize that there is no perfect method of apportioning overhead to the infringing business (*Standard v. Cropp, supra*; *Stearns-Roger v. Ruth, supra*), and accordingly take a practical approach to the problem, using the best method that the nature of the particular case and the records available will permit. This is well illustrated

by *Haiss Manufacturing Co. v. Link-Belt Co., supra,* where the defendant infringed by manufacturing and selling wagon loaders, which constituted a small fraction of its business. It kept no separate account of the overhead chargeable to the infringing business, and there was no evidence under which the elements of its general overhead could be apportioned. Defendant claimed that a proportionate part of its total overhead should be charged to the infringing line on the basis of direct labor costs, which showed a small profit to defendant. The court, being convinced that defendant had made a substantial profit from infringement, held that defendant had not sustained its burden of showing overhead expenses were increased by infringement in proportion to direct labor costs. It did not, however, leave overhead out of consideration entirely by awarding plaintiff the defendant's gross receipts from infringement minus only material and direct labor costs; but instead computed defendant's profits by taking the percentage of average clear profit from its entire business and applying this to the infringing business, thus taking overhead into account indirectly.

Since the problem of treatment of overhead in the case of the infringing manufacturer is only the other side of the problem with the infringing user, the principles above considered are applicable to the case at bar. In this case, it seems clear that from a theoretical standpoint defendant's method of computing overhead savings is the most accurate and the correct one. Overhead expenses do not always vary with direct labor costs incident to the use of machinery: it is common knowledge that in modern factories expensive labor-saving machinery is frequently adopted with which the great increase in some of the burden costs is more than compensated by the saving in labor costs. As between different machines available for the same operation, one may be the least expensive in depreciation cost, another in tool costs, a third in maintenance, and a fourth in labor. (See, as an example of this, defendant's account in *Carson v. American Smelting Co., supra.*) Defendant's system of apportioning burden among its departments recognizes that all kinds of burden do not vary in proportion to direct labor, different bases being used for apportioning the different elements. It is true that it apportioned departmental burden among operations entirely on a direct labor

basis, but for its purposes in doing this a refined method was not necessary. It would seem that defendant, by the adoption of an accounting method of distributing burden among operations for a different purpose, should not necessarily be barred from proving similar costs here by a better method, if available. On the other hand, it must be recognized that the adoption of a particular system of computing burden costs by defendant may result in its records being kept in such a way as to make it impossible to calculate them by a theoretically more precise method. Furthermore, it appears that the method of applying manufacturing overhead on the direct labor basis is generally accepted by accountants as the best one where it is impossible or impracticable to use a theoretically more accurate system.

Consideration of the problem leads me to the conclusion that, with the records available here, a computation of comparative overhead costs of the shaper and Walcott machines on a breakdown basis is going to be deficient in important respects. In the first place, it will be unsatisfactory with respect to important elements of overhead which defendant thinks it unnecessary to consider in the comparative cost study, but which would seem reasonably certain to be greater with the shapers than with the Walcotts. For example, a very important item of overhead, factory supervision, varies in general with the amount of direct labor, and consequently would be greater with the shapers. While, as pointed out by Mr. Moise, the addition of a single laborer in a department might not require an additional foreman, the point will eventually be reached when it will become necessary to add one. It would be unfair to charge the expense of the added foreman to the last productive worker taken on: it should be apportioned upon an average basis. If records of the cost of this element of overhead in the camshaft department were still available, the additional cost for the shapers could be calculated with reasonable accuracy: without such records or any reliable basis for estimation, the cost of this element by itself cannot be computed. The same situation prevails with the similar cost elements of employees' liability and compensation insurance, and timekeeping, pay roll, and clerical salaries. Another element of overhead costs which would probably be larger with the shapers, but which was disregarded by

defendant for lack of records, is that of power. There are some records indicating the use of a 7½ horsepower motor on the shaper, as compared with a 5 horsepower one with the Walcotts. Even if the motors were the same, however, power consumption (which in general varies with the rated motor power) would be proportional to the time consumed in the cam-roughing operation, and, in turn, with direct labor costs. While this element should not be disregarded if it can be determined, there is no evidence in the record from which its cost with the shapers and Walcotts can be computed as an individual element.

In the second place, as to the three items of overhead —machine depreciation, machine maintenance and repair, and cutting tool costs—which defendant admits are appreciably affected by a change from the Walcotts to the shapers on the cam-roughing operation, it is difficult, if not impossible, to state a satisfactory account of them as individual elements here, in view of the fact that defendant's accounting system has not been built around the effort to ascertain costs by operations, and the records available, particularly as to maintenance and repairs, are somewhat scattered. An analysis of these three items indicates, in my opinion, that they would probably vary in the same direction (and roughly in the same proportion) as direct labor costs on the shapers and Walcotts.

In my opinion, there is considerable merit to the criticisms made by Mr. Moise of defendant's treatment of these items. I do not feel that its accounts accurately reflect the actual saving or loss from the use of the Walcotts as compared with the shapers. With respect to depreciation, for example, defendant finds that, despite a 50% greater cost of each shaper (an average of $4,100 for the Walcotts as against $6,000 for the shapers purchased in 1923 and 1924) and despite the slower speed of the shapers which, other factors being equal, would mean approximately 50% more shapers to turn out the same production, depreciation costs are substantially the same for both. This conclusion is based primarily on the assumption that 13 shapers would do the work of 16 Walcotts, because 13 shapers actually turned out the largest production of automobiles in Ford history in 1923, while at least 16 Walcotts were always used for its automotive production. This method of cal-

culation, however, directly conflicts with that used by defendant in its plant to determine the same thing: its records of its productive capacity make the number of machines needed for its camshaft production inversely proportioned to the speeds of the machines. (See Defendant's Exhibit 247 and Plaintiff's Exhibit 154D on the main trial, both of which state that 14.5 Walcott lathes or 21.6 shapers are required for its production schedule.) Defendant overlooks a variety of factors which might account for the greater number of Walcotts being used, beside its assumption that the Walcotts were getting out of order more often: the extent to which the shapers may have been pressed to get out the 1923 production, the decrease in number of shifts after introduction of the Walcotts, the increasing development of an automatic conveyor system which would make it necessary to be certain of a smoother flow of camshafts through the line of production. It is very significant that in 1923, nine new shapers were ordered because of the demands of production; and it seems probable that their use had been continued, a number in excess of twenty would have been kept available.

With respect to maintenance, defendant's finding of substantially higher costs with the Walcott machines is based on two conclusions: (1) higher ordinary repair costs, because four maintenance men were employed in the department on the last two shifts to service the Walcotts as against only two men for the shapers; and (2) higher extraordinary repair costs for the Walcotts in the form of fourteen special overhauls in 1928, 1929, and 1930 at a cost of over $23,000, while the records show only three overhaul jobs for the shapers. These conclusions, however, overlook evidence showing that a different system of maintenance was followed with the two machines. With both machines, cleaning and minor repairs were done in the department. With respect to overhauls, however, each shaper was removed on an average of once a year to the main tool room for overhaul; while the Walcotts were taken apart and reassembled by the maintenance men in the department, the worn parts only being taken to the foundry toolroom for replacement or repair. The overhaul cost of the shapers, being chargeable to another department, was not computed in defendant's accounts, and if taken into consideration would lead to a very different result.

The reason for the special overhauls on the Walcotts from 1928 to 1930 is somewhat obscure, but it is possible they were attributable to the changeover to Model A production. In this connection, a serious objection to both the depreciation and maintenance accounts of defendant lies in their failure to consider the effect of the necessity of remodeling the shaper for Model A production. With the extensive modifications necessary to convert the Model T shaper into any one of the suggested Model A designs, the cost of the changeover to Model A production would unquestionably have been much greater than with the Walcotts: with at least some of the modifications it would have been necessary to build entirely new machines. Defendant's accountants, however, do not make allowance for the development cost of the Model A shaper; nor for the modification of the existing machines or the building of new ones; nor for the increased costs of purchase and maintenance of the more complicated mechanism. (In fact, defendant's depreciation account does not make allowance for increased costs of machinery around 1929 in valuing shapers added during Model A production, but instead their cost is figured at the 1923 rate.) Defendant's reason for this is not clear, unless it is proceeding on the theory that the speed of the shaper could have been stepped up by other changes to more than offset these costs.

Defendant has not computed cutting tool costs, because of insufficient records. However, the records which are available indicate the average original cost of the shaper tools was approximately four times that of the Walcotts, and this, together with a much shorter life (see Defendant's Exhibit A, Exhibits 8, 9 and 10), more than counterbalances the greater grinding cost of the Walcott tools, resulting in a substantial saving with the Walcotts.

Some criticisms could also be made of Moise's accountants of comparative costs of these three items, but, since it is not claimed by plaintiff that this method of computing overhead savings should be adopted by the court, I think it unnecessary to go into them here. Considering the entire picture, I am inclined to agree with the plaintiff that there are too many gaps to fill in to state a satisfactory account of overhead savings by the breakdown method adopted by defendant. It might be possible to fill in the

gaps by estimates, but on this record satisfactory estimates cannot be made of such costs, for example, as those for factory supervision with the two machines or those incurred in the modification of the shaper to adapt it to the Model A shaft. It would seem unfair, however, to ignore overhead savings, since it seems reasonably clear that substantial savings in those costs were realized by defendant in using the Walcott lathe in place of the shaper on Model T and A production. While it is recognized that application of general ratios of overhead to direct labor costs would lead to unfair results in many cases, I believe an analysis of the evidence here indicates that with the shaper and Walcott machines overhead costs by and large would vary in proportion to direct labor. While some of the elements of overhead would vary little, if at all, these static costs are offset by some elements (e.g., depreciation and cutting tool costs) which would probably increase with the substitution of the shapers for the Walcotts in a greater proportion than direct labor. I therefore adopt the method of computing overhead costs for these two machines by using the departmental percentages. I think this treatment is in line with the cases on the treatment of overhead in patent accountings, and also with the practice of cost accountants to apportion manufacturing burden on a direct labor basis where a more precise method is not feasible. It is to be observed that this method takes into consideration the increased depreciation and maintenance costs of the Model A shaper, since the reduction in speed for that form of shaper increases the overhead costs thus calculated, and since, moreover, the departmental overhead percentages ran considerably higher for Model A and Model T production.

In this connection, the language of Justice Cardozo in *Duplate v. Triplex,* 298 U. S. 448, 468, 80 L. Ed. 1274 (1936), may be quoted:

> "But the master has found, and the parties are agreed, that in a business of this order there is no method of accounting, not impracticably burdensome, whereby the costs of operation can be apportioned and distributed except upon an average basis. At all events, if such a method was available, the defendants did not use it. They kept their books upon the

basis of the method they decry, and measured loss or gain accordingly. Average cost, even if not identical with actual cost, is the best approximation known to accountants."

Thus far, consideration of the overhead problem has been limited to the comparison between the shaper and Walcott machines for Model T and A production. With the tractor shaft and the grinder as the standard of comparison, the situation is somewhat different. Depreciation costs do not rise with the grinder as compared with the Walcott in anything like the proportion of direct labor. Since one man operated two Walcotts but only one grinder, if six times as much labor were required with the grinder only three times as many machines would be needed. In addition, it appears that the machines themselves were only about half as expensive as the Walcotts. Finally, with the tractor, defendant was getting into such low production as to diminish the benefit from labor-saving machinery. Two Walcott machines, the minimum which could be economically used, probably provided a greater productive capacity than was needed for tractor production. Defendant's accounts indicate that three grinders turned out the large 1923 production, and all three cost only ¾ as much as the two Walcotts which replaced them.

Since other important overhead items, such as repair costs, would likewise not rise with the grinder as compared with the Walcott in proportion to direct labor costs, the use of the burden percentages based on direct labor, in the absence of countervailing factors, would greatly exaggerate actual burden savings. However, it is claimed by plaintiff that the cost of grinding wheels was so great that the burden percentages would most likely underestimate actual burden savings. There is conflict in the record as to this cost. In defendant's statements of account, the cost of a grinding wheel is stated as $7.50 each and its life is variously estimated at 65 to 90 hours. Mr. Moise's computation of grinding wheel costs for the Model A showing them to be only about 15% of direct labor costs (R. 2500) is apparently based upon an estimate of defendant in its Exhibit C (paragraph 10). However, the foreman of the camshaft department of the Nash Motor Company from 1919 to 1931 testified that their wheels for rough grinding

cams had a life of only fifty six-cylinder camshafts (or ten hours at five shafts per hour), which alone amounted to 83⅓% of direct labor costs. If grinding wheels at Ford had a comparable life (making adjustment for the smaller number of cams on its shaft), they would each machine 75 tractor shafts, at a cost of 10 cents per shaft or close to 100% of the direct labor cost.

Since the operation appears to have been identical at both plants, it is difficult to account for this wide discrepancy between Ford and Nash figures, unless some mistake has been made in defendant's account, such as the use of figures of life of wheels for finish rather than rough grinding. The Nash figures seem more consistent with the statement of defendant's Mr. Wibel on the main trial that grinding wheels were worn away quickly and were very expensive. Assuming, therefore, the correctness of the Nash figures and the existence of some mistake in defendant's accounts on this point, I think that, in view of the resultant heavy cost of grinding wheels, the departmental burden percentages may be fairly applied to measure burden savings without reducing them, except for the abnormally high figure of 674.22% for November, 1926, which I have reduced to 200%.

Total direct labor and burden savings from the use of the Walcott lathes, computed in accordance with the conclusions here adopted, are shown on Schedule C attached to this report and are as follows: Model T, $42,700.76; Model A, $98,675.15; Tractor, $65,448.31; total for all shafts, $206,824.22.

(3) Offset of Loss From Scrapping Shapers.

The question may be raised as to whether the unrecovered cost of the shapers scrapped by defendant after adoption of the Walcotts and the payment of approximately $20,000 on new shaper orders cancelled in 1924 should be offset against the savings found to result from the infringing machines. While defendant raised this point at one time during the trial, neither party has given any effect to it in its accounts. No doubt when a company purchases a new machine, it expects to save enough with it to make up for any loss in scrapping the one it replaced. If it did not make such saving, it would feel that it had made a bad

investment. However, I know of no case which has considered this factor in determining profits from the use of a machine; and it hardly seems proper to say that a scrap loss on a former machine constitutes a cost of the machine which replaces it. In this case, moreover, infringement did not commence until more than a year after the installation of the Walcotts, by which time eleven of the seventeen shapers had been scrapped and the $20,000 payment long since made. It might equally well be argued that since if defendant had turned to the shapers in 1925 instead of infringing it would have had to dispose of its comparatively new Walcott machines as well as buy new shapers, the loss which would have resulted from disposing of the Walcotts should be added to the cost of using the shapers as a standard of comparison. Under all the circumstances, I think it best to follow the method adopted by the parties and disregard any losses in scrapping machinery used prior to infringement.

3. Apportionment of Profits.

Thus far, the inquiry has been restricted to the question of the savings resulting to the defendant from the use of the infringing machines. The question now arises as to whether the plaintiff is entitled to all of those profits or whether some of them are not attributable to other elements in the machine beside the plaintiff's invention, which plaintiff cannot recover. The defendant claims that the profits must be apportioned between those attributable to plaintiff's invention and those resulting from patented improvements incorporated in the infringing machines; and that, if this is done, it will be found that all of the profits resulted from the improvements, and that plaintiff can as a consequence recover none of them. Plaintiff, on the other hand, claims that the rule of apportionment does not apply to a case where (as is claimed to be the situation here) the plaintiff's patent is on a unitary device and the claims of the patent cover the improvements added by the defendant; that it is therefore entitled to all the profits.

The question of apportionment arises in practically every patent accounting case and is probably the most difficult one with which the courts must deal. It was recognized early by the Supreme Court in *Seymour v. McCor-*

mick, 16 How. 480, 14 L. Ed. 1024 (1853), where the plaintiff's patent was for an improved driver's seat upon a reaper, that it would be unfair to permit the plaintiff to recover damages equivalent to those which would have been assessed if its patent had been upon the entire machine; and consequently the court restricted the plaintiff to those damages it could prove were attributable to the seat improvement. The same doctrine was later applied to the recovery of profits, in connection with which the problem of apportionment has more frequently arisen. In explaining the basis of the doctrine in *Sheldon v. Metro-Goldwyn Pictures Corp.*, the Supreme Court said that profits are awarded to the patentee "in accordance with the principles governing equity jurisdiction, not to inflict punishment but to prevent an unjust enrichment by allowing injured complainants to claim 'that which, *ex acquo et bone*, is theirs, and nothing beyond this'." The patentee is entitled to reap the full value of his invention, but not that which results from things outside the scope of his patent. The question of apportionment can arise under a variety of different fact situations: the patent involved may be on a machine, process or article; the infringement may be by sale or use of the patented thing; and the question may be one of recovery of profits or of damages. However, it appears that the same fundamental principles are applied to each type of case.

In each case involving the question of apportionment of profits, it is necessary to consider two issues: first, whether the defendant under the circumstances of the case has a right to have the profits apportioned; and, second, if so, how much of the profits are attributable to plaintiff's invention and how much to the other factors upon which the right to apportionment is based. This case presents a very close question on the first issue of the right to apportionment. The underlying facts on this issue are reasonably clear, and may be summarized as follows:

1. The Gordon machine itself was impracticable for machining the Ford camshafts. This is shown by the experience of Ford and of the International Harvester Company with the machine, and has been found as a fact by the Court of Appeals. In plants where the Gordon machine was successfully employed, it appears that the cams were of a more blunt-nosed type than those of defendant.

2. The Walcott machine had two improvements over the Gordon machine devised by its designer, Melling, upon which he obtained patents subsequent to the issue of the Gordon patent. The change in the method of tilting the tool, while held by the Court of Appeals to involve merely the substitution of mechanical equivalents for the means used by Gordon, was also recognized by the court as a valuable improvement which might be patentable; and a patent was later issued to Melling in his machine.

The second patented improvement consisted of a mechanism for advancing the tools to take a second finishing cut on the cams without removing the shaft from the machine; whereas, in contrast, some companies using the Gordon machine put the shaft through a second machine for a finishing cut. While it appears that devices for automatically taking two cuts upon a lathe are old, no evidence has been introduced to show that there was not patentable novelty in Melling's device. Defendant claims that this improvement, unlike the other one, was wholly outside the scope of the Gordon patent. However, it would seem that the element in Claim 2 of the Gordon patent, as an example, "means for simultaneously causing relative movement between the work holder and tool holder axially with relation to the work holder," covers the means for doing this equally whether one or two cuts are taken.

It seems clear that without these two improvements no savings would have been realized by the defendant, at least by comparison with the shaper. In the absence of evidence or argument to the contrary, it must also be assumed that the patents upon them were valid.

3. On the other hand, the Gordon invention was also necessary to the functioning of the Walcott lathe in cutting the cams (assuming, as I have found, that the non-tilting Walcott lathe is infringing). Without the basic Gordon idea of oscillating the tools to maintain proper cutting angles, the Walcott machine would be only an ordinary lathe.

All through the authorities on apportionment, a distinction is made between cases where the plaintiff's patent is for an improvement narrow in scope or covering only a part of the article on which it was used, and those where the plaintiff's patent is a basic one on a complete structure.

Egry v. Standard Register Co., 23 F. (2d) 438 (C. C. A. 6, 1928); *Yeserba v. Hardesty Manufacturing Co.*, 166 Fed. 120 (C. C. A. 6, 1908); *Stromberg Motor Devices Co. v. Zenith-Detroit Corp.*, 73 F. (2d) 62 (C. C. A. 2, 1934); *Herman v. Youngstown Car Manufacturing Co.*, 216 Fed. 604 (C. C. A. 6, 1914); *Cincinnati Car Co. v. New York Rapid Transit Corp.*, 66 F. (2d) 592 (C. C. A. 2, 1933); *Westinghouse Co. v. Wagner Electric Co.*, 225 U. S. 604, 56 L. Ed. 1222 (1912); *Dowagiac v. Minnesota Plow Co.*, 235 U. S. 641, 59 L. Ed. 398 (1915). In the former type of case, the courts hold the profits must be apportioned between the contribution of the invention and the unpatented or prior art features. Examples are the patented driver's seat on the harvester (*Seymour v. McCormick, supra*), and the patented clamp on a mop (*Garretson v. Clark*, 111 U. S. 120, 28 L. Ed. 371, 1884). In the cases of the latter type, it is generally held that the patentee is entitled to all the profits, unless the infringer has made additions or improvements, in which case under certain conditions in controversy here an apportionment will be made. See *Westinghouse v. Wagner, supra*; *Elizabeth v. Pavement Co.*, 97 U. S. 142, 24 L. Ed. 1000 (1878); *Hurlburt v. Schillinger*, 130 U. S. 456, 32 L. Ed. 1011 (1889); *Yeserba v. Hardesty, supra*; *Stearns-Roger v. Ruth, infra*; *Stromberg Motor Devices v. Zenith-Detroit Corp., supra*; *Dunn Manufacturing Co. v. Standard Computing Scale Co.*, 204 Fed. 617 (C. C. A. 6, 1913). As will be seen, the distinction between the two types of cases is especially important on the question of burden of proof. The determination of the class into which a particular case falls is not always an easy matter, there being no simple decisive test. See *Stearns-Roger Manufacturing Co. v. Ruth*, 87 F. (2d) 35 (C. C. A. 10, 1936). The classification does not depend upon the language used by the patentee in his claims, for, as was said by *Egry v. Standard Register Co., supra* (p. 440):

> "He cannot, by the language which his claim happens to take, transform his invention of an improvement in an existing structure into one of a complete structure, as if it were wholly new, so as to entitle him to profits upon those parts of it which are not in any fair sense his invention."

The test most commonly applied is that of whether if the patented features are abstracted a complete or workable article or machine is left, but this test is not universally applicable. *Cincinnati Car Co. v. New York Rapid Transit Corp., supra*; *Herman v. Youngstown, supra.* However, in the present case there would seem to be no doubt but that in view of the holding of the Court of Appeals that the patent in suit was a pioneer patent upon a machine for turning cams, the invention is one like that in the *Westinghouse* case which permeates the whole device so that the patent covers the article as a whole. The case consequently falls in the second class.

With either type of case, where it appears that the entire market value of the infringing article is attributable to the patented invention, the patentee is entitled to all the profits. *Crosby Steam Gage & Valve Co. v. Consolidated Safety Valve Co.*, 141 U. S. 441, 35 L. Ed. 809 (1891); *Elizabeth v. Pavement Co., supra.*

A third type of apportionment case which should be mentioned here is that in which the claim of apportionment is based not upon changes by the defendant in the thing patented, but rather upon improvements in machines or methods of manufacturing a product patented to the plaintiff. In such cases, it has been held that even though the improvements were patented and resulted in substantial savings in cost of production, there is no basis for apportionment. *Duplate v. Triplex, supra*; *Conroy v. Pennsylvania Manufacturing Co.*, 199 Fed. 427 (C. C. A. 3, 1912); Cf. *Carborundum Co. v. Electric Smelting & Aluminum Co.*, 203 Fed. 976 (C. C. A. 1913). The reason for this rule is not entirely clear, but the courts treat the case as being similar to that in which an apportionment based upon savings in cost of production resulting from the superior skill of the infringer is denied (*Lawther v. Hamilton*, 64 Fed. 221, C. C., Wis., 1892).

The question here resolves itself into one of when improvements added by defendant to the plaintiff's patented article will afford a basis for apportionment. *Westinghouse v. Wagner, supra*, which undertook to summarize the law on apportionment and which is the leading case on the subject, was that type of case. There, the plaintiff had a combination patent on a transformer containing open

spaces in the core to cool the mechanism. The defendant infringed by manufacturing and selling a transformer with open spaces in the core but with a reorganization of the elements to include open spaces in the coil and between the coil and core. The Supreme Court in its opinion stated four basic rules of apportionment, two of which should be quoted here.

> "(c) Where profits are made by the use of an article patented as an entirety, the infringer is liable for all the profits unless he can show—and the burden is on him to show—that a portion of them is the result of some other thing used by him. *Elizabeth v. Pavement Co.*, 97 U. S. 126.
>
> "(d) But there are many cases in which the plaintiff's patent is only a part of the machine and creates only a part of the profits. His invention may have been used in combination with valuable improvements made, or other patents appropriated by the infringer, and each may have jointly, but unequally, contributed to the profits. In such case, if plaintiff's patent only created a part of the profits, he is only entitled to recover that part of the net gains."

The Supreme Court, accepting the findings of the lower court that the spaces added by defendant were valuable and noninfringing improvements (although not shown to have been patented), held that the case was one for apportionment, apparently considering the case as coming under Rule (d), *supra*.

Plaintiff claims that the *Westinghouse* case is distinguishable from the case at bar, because the improvements here are within the inhibited field of its patent, the principal one having been adjudicated infringing. It is claimed that this falls under Rule (c) rather than Rule (d) of the *Westinghouse* case, and that the "some other thing" referred to in Rule (c) means something outside the scope of the patent claims. It is somewhat difficult to see the distinction between Rules (c) and (d) under plaintiff's interpretation, and also to distinguish this case from the *Westinghouse* case on their facts. However, the cases can be distinguished on the basis of the findings of the court in the *Westinghouse* case that the improvements were non-

infringing, while here the improvements were infringing. The *Westinghouse* case can be considered to stand for the rule that when the improvements of defendant contributing to the profits are non-infringing an apportionment will be made. The same holding was made in *Tuttle v. Claflin*, 76 Fed. 227 (C. C. A. 2, 1896), as to a non-patented heating mechanism added by defendant to the infringing machine.

The issue therefore can be further limited to the question of when, if at all, infringing improvements can be a basis for apportionment. This, in turn, can be subdivided into the case of infringing improvements which are themselves patented and of those which are non-patented. As to the latter, the authorities seem clear that there is no right to apportion: in *Clark v. Johnson*, 199 Fed. 116 (C. C. A. 7, 1912), where porcelain was substituted for metal in a dental spittoon infringing plaintiff's patent and in *Tuttle v. Claflin, supra* (where a different feeding mechanism was substituted by defendant in an infringing machine), it was held that the substitution by defendant of these mechanical equivalents (which it does not appear were patented) for the means described in plaintiff's patent affords no basis of apportionment, even though the substitution was largely responsible for the profits.

In the case of the patented improvement which is dominated by the plaintiff's patent, the law is not so clear. Apart from its argument based on Rule (c) of the *Westinghouse* case, plaintiff relies principally on this issue upon *Christensen v. National Brake & Electric Co.*, 10 F. (2d) 856 (D. C., Wis., 1924); *Flat Slab Co. v. Turner*, 285 Fed. 257 (C. C. A. 8, 1922); *Tuttle v. Claflin, supra*; and *Duplate v. Triplex, supra.* The only one of these which seems directly in point is the *Christensen* case, where the court held that improvements within the inhibited field of the patent, either as a whole or respecting any part of the structure, do not constitute a ground for apportionment, even if patented and no matter how much they promote the commercial favor of the structure, since the infringer is still exercising the patentee's rights. In the *Flat Slab* and *Tuttle* cases, certain alleged improvements were rejected as a basis of apportionment on the ground that they were merely mechanical equivalents of the patented construction. But it does not appear in either case that the equivalents in question

were patented (although the defendant in the *Tuttle* case contended that its improvement required invention to produce); so the cases are not precisely in point. The *Duplate* case is applied here by analogy, plaintiff claiming that there is no substantial difference between the case where the defendant appropriates the plaintiff's patent bodily but makes improvements in production processes, and that where it makes improvements within the scope of the patent in the patented thing itself.

Defendant, on the other hand, relies principally upon *Mason v. Graham*, 90 U. S. 261, 23 L. Ed. 86 (1875), in support of its position on this issue. In that case, defendant sold infringing pickerstaff motions for looms, but made them according to a pattern of his own devising, which was patented and which reduced their cost of manufacture. The court held that the saving in manufacturing cost should be deducted from the profits. Although this case is rather old and is rarely cited on the question of apportionment, it seems to be in point here; and, if followed, requires a decision in favor of defendant on the issue. Plaintiff contends that *Mason v. Graham* was impliedly overruled by the *Duplate* case, *supra*; but it seems clear that the *Mason* case involved an improvement in the patented thing itself rather than in methods of production of the thing (see lower court opinion, Fed. Cas. No. 5672), so there is at least a technical distinction between the two cases. Nor do I follow plaintiff's attempted distinction of this case on the ground that the infringement there was one of making and selling instead of use: the *Westinghouse* case was also one where the infringement was by making and selling. Another case relied on by defendant, *Keystone v. Adams*, 151 U. S. 139, 38 L. Ed. 103 (1894), does not seem to be in point with respect to anything that was actually decided. *Dunn v. Standard, supra*, in this Circuit, however, seems in line with *Mason v. Graham*: there, the defendant added a patented improvement to plaintiff's machine, which was apparently covered by the claims of the patent on the latter; but the court granted apportionment saying that the question of apportionment could not depend on the largely fortuitous language of the claims.

Approaching the issue here from the standpoint of principle, there is to be considered the factor pointed out

by defendant that plaintiff could not lawfully have sold the defendant machines like the infringing ones without obtaining the Melling patent rights; and, further, that if defendant had infringed both Gordon and Melling patents, it would, under plaintiff's conception of the law, have been subjected to a double liability. (Of course, the same point could be made in a case like the *Duplate* one, where the Supreme Court denied an apportionment.) On the other hand, there is a practical danger in recognizing apportionment in a case of this type, in that it may cause the accounting proceeding to go off too far on collateral issues as to the validity of a variety of improvement patents, since an infringing improvement which is the subject of an invalid patent could hardly be a basis for apportionment.

Thus, the authoritative cases seem to point to conflicting conclusions on the issue of the right to apportionment in this case, although there is perhaps a slight edge on defendant's side in those most closely in point. While, however, I have considered the law applicable to that issue at some length, I do not think that it is necessary here to finally decide it, since I am of the opinion that whichever way it is decided will not affect the result. Even if the right of apportionment is recognized, it is still necessary to separate the profits attributable to plaintiff's patented invention from those attributable to defendant's improvements, and the question arises whether on this record and under the law governing burden of proof that can be done.

The question of burden of proof is important on the issue of separation, because of the frequent impossibility of showing a reasonable basis of allocating the profits to the two factors. In recognition of that fact, the law as to burden of proof represents to a large extent a compromise between the desire of the courts not to turn the patentee down without any recovery, where it was obvious that the defendant had benefited greatly from appropriation of his invention, nor to penalize the infringer by charging him with all the profits when the plaintiff's invention was responsible for only a small part of them. In the *Westinghouse* case, which considered at great length the rules as to burden of proof, it was held that once the plaintiff has satisfied the initial burden of proving infringement and profits from the sale or use of infringing machines, the burden devolves

upon the defendant to show that something other than plaintiff's invention has contributed the profits. Upon that showing, the burden returns to plaintiff to make the separation between the profits attributable to the invention and the other thing, unless an apportionment is shown to be impossible, in which case the burden shifts back to defendant, since his act of commingling the original invention with the improvements was responsible for the impossibility. The rule is rather unusual, since the ordinary result of inability of one bearing the burden of proof to carry it is loss of the issue, while here the shifting of the burden means that the one on whom the burden rests to make the apportionment prevails unless the other side produces countervailing evidence. There is an indication of doubt in some of the cases as to whether the burden of apportionment in the *Westinghouse* case was actually imposed on the patentee at all. See *Egry v. Standard Register Co., supra*; *Cincinnati Car Co. v. New York Rapid Transit Corp., supra.*

The interpretation which has been placed on the *Westinghouse* case and the later Supreme Court decision in *Dowagiac v. Minnesota, supra,* by the Court of Appeals of this and the Second Circuit, seems to be that in cases where the plaintiff's patent is for an improvement the burden of allocating the profits between the invention and the other features is on the plaintiff; in cases where the patent is upon an entire article, it is on defendant. *Egry v. Standard Register Co., supra*; *Cincinnati Car Co. v. New York Rapid Transit Corp., supra*; *Stromberg Motor Devices Co. v. Zenith-Detroit Corp., supra*; *Columbia Machine Corp. v. Adriance Machine Works,* 79 F. (2d) 16 (C. C. A. 2, 1935); *Christensen v. National Brake & Electric Co., supra* (D. C., Wis.). (Cf. *Flat Slab Co. v. Turner, supra,* where the burden of separation was placed on the infringer as to one of his alleged improvements; and *Standard Co. v. Cropp Co.,* 6 F. (2d) 447, C. C. A. 7, 1925, and *Levin v. Davis, supra,* where the burden was put on the infringer after impossibility of apportionment had been shown.) Under these authorities, the burden of separation in this case is upon the infringer; and under any of the authorities it is upon the infringer where impossibility of apportionment appears.

The plaintiff submitted no evidence to separate the respective contribution of the two patents, relying upon its

legal contention that the doctrine of apportionment is not applicable here. Defendant's evidence on the issue consisted almost wholly of expert testimony that, since the Gordon machine was not operable on the Ford camshaft, 100% of the value of the infringing machine to defendant was attributable to the Melling improvements. This does not seem to me to be a sound conclusion. The reasoning would lead to the result that if the defendant had infringed the Melling as well as the Gordon patents, it would not be liable to either patentee, since in each case it could say that the infringed invention without the other was worthless. Liability would thus be defeated where the union of two inventions was necessary to the making of profits; yet, apart from infringement, defendant could not accomplish that end, since it would have to pay both patent owners for the rights to the machine. The error in this reasoning is that it confuses the whole with one of its parts; it evades the problem, as expressed in the *Cincinnati Car* case, *supra* (p. 594), "quantitatively to allocate the joint product of two factors, each a condition to the result."

Is there, then, any method by which an apportionment can be made on this record? The cases recognize the difficulty of making an exact apportionment, and hold that mathematical exactitude is not required but a division based upon the structural relationship between the patented parts and the nonpatented parts or improvements, or upon some other logical basis giving a reasonable approximation, can be made. *Westinghouse* case, *supra*; *Dowagiac* case, *supra*; and other cases. However, we do not have here any "helpful opinion" as referred to in *Herman v. Youngstown, supra* (p. 608), to aid the court in making the apportionment. The only possible way that an apportionment can be made on this record is for the court to make an arbitrary apportionment based upon its own judgment: to say, for example, that since the Gordon patent was the basic one, and since Gordon could (and did) carry on a business without Walcott, while Walcott could not do so without Gordon, two-thirds of the profits should be attributed to the Gordon invention and one-third to the Melling improvements. A solution of this sort was reached in *Wetherill v. Parsaic Zinc Co.*, Fed. Cas. No. 17,464; but, while this might seem a practical result, I do not think it meets the requirements of

most of the cases for proof of apportionment. The situation here is similar to that in *Egry v. Standard Register Co., supra,* in this circuit, where the court held that the record showed no reasonable basis of apportionment. The *Egry* case was of the type involving an improvement patent, so that the plaintiff was not permitted to recover any profits. This case is of the other type, and the impossibility of separating the profits sufficiently appears to impose the burden on defendant. Resorting to the books of the defendant would be of no assistance on the issue; the confusion is not related to the books at all. Consequently I conclude that the plaintiff is entitled to all the profits; as between that alternative and allowing the plaintiff none, that is the fairer result.

V. DAMAGES: REASONABLE ROYALTY.

Under the Patent Act, the plaintiff is entitled to recover damages as well as profits in an equity case. Plaintiff cannot recover here on the basis of lost profits, which is the primary method of measuring damages. There was no proof of lost sales here. The question therefore becomes one of determining a reasonable royalty, which the order of reference directs me to compute. This basis of damages has been increasingly used in recent years, since it is usually not possible to prove lost profits with the degree of certainty required by the courts and, since there is often no established royalty, an alternative basis of damages.

The reasonable royalty rule was developed by the courts as a means of compensating the patentee, where damages or profits could not be satisfactorily proved by other methods; and was subsequently incorporated in the Patent Act (35 U. S. C. A. Sec. 70). The principles which govern the determination of a reasonable royalty should be reviewed at the outset.

The courts have substantially agreed upon the definition of a reasonable royalty as being that payment for a license for the patent which would have been agreed upon at the time of infringement by reasonably prudent men in the position of plaintiff and defendant, acting without compulsion and assuming the patent to be valid. *Reynolds v. L. A. Young,* 101 F. (2d) 257, 261 (C. C. A. 6, 1939);

Goodyear v. Overman, 95 F. (2d) 978, 984 (C. C. A. 6, 1937); *Egry v. Standard, supra*, and many other cases. The evidence which may be considered in fixing a reasonable royalty is quite diversified. Primarily, the evidence to be considered is that of "the nature of the invention, its utility and advantages, and the extent of the use involved." *Dowagiac v. Minnesota, supra*; cf. *General Motors v. Blackmore*, 53 F. (2d) 725, 729 (C. C. A. 6, 1931), and *Horvath v. McCord, supra*, page 335. The opinion testimony of experts is always admissible, as well as evidence of business practice and royalties in related fields. *U. S. Frumentum v. Lauhoff*, 216 Fed. 610 (C. C. A. 6, 1914). Isolated royalty contracts made by the patentee with others for the rights to the invention are admissible, although the court will weigh the circumstances under which they were made and the reasonable royalty assessed may be more or less than that provided in such contracts, the infringer not being entitled to the depressed rate to which the patentee may have been driven by open defiance of his patent. *General Motors v. Blackmore, supra; Horvath v. McCord, supra; Dunkley v. Central California Canneries, supra; Austin-Western Co. v. Disc Co.*, 291 Fed. 301 (C. C. A. 8, 1923). The amount of profits, or lack of them, realized by defendant from infringement is material; but the mere fact that no profits have been made does not prevent the award of a reasonable royalty. *National Tube v. Mark, supra; Reynolds v. Young, supra*; *Dunkley v. California Canneries, supra*; *Malleable Iron Range v. Lee*, 263 Fed. 896 (C. C. A. 7, 1920). It is the expectable profit at the time the suppositious royalty contract was made, rather than the actual profit, which is important.

The royalty should be fixed at such figure as to leave room for an expected manufacturing profit in the licensee. *Rockwood v. General Fire Extinguisher Co.*, 37 F. (2d) 62, 66 (C. C. A. 2, 1930); *Consolidated Rubber Co. v. Diamond Rubber Co.*, 226 Fed. 455, affirmed 232 Fed. 475 (D. C., N. Y., 1916). With this method of fixing damages, it is unnecessary to show that the sales or purchases made by defendant would have been made by plaintiff if there had been no infringement. *Consolidated Rubber Co. v. Diamond Rubber Co., supra*; *Dunkley v. California Canneries, supra*. The reasonable royalty method applied to cases

where the infringement has been one of use, as well as where it was one of sale of the patented thing, although the measure of royalty will usually differ in the two types of cases. *Horvath v. McCord, supra*; *Dunkley v. California Canneries, supra; Gear-Grinding Machine Co. v. Studebaker Corp.*, 4 F. (2d) 510 (C. C. A. 6, 1925); *Muther v. United Shoe Machinery Co.*, 21 F. (2d) 773 (D. C., Mass., 1927). It has been said that a reasonable royalty should be computed upon a conservative basis, and that it should not be so high as to induce patentees to countenance infringement nor so low as to encourage infringement. *Consolidated Rubber v. Diamond Rubber, supra.*

In the case at bar, the plaintiff claims that it has suffered damages of various kinds from the defendant's infringement, which, however, cannot be calculated with reasonable certainty; and that the evidence supports the award to it of a royalty of at least six cents per camshaft turned on the infringing machines. Defendant, on the other hand, claims that the statutory conditions to the award of a reasonable royalty are not satisfied here; that if any royalty can be allowed it cannot be based upon the production of the infringing machines; that a royalty of ten per cent of the selling price of the Gordon machine was established by the plaintiff, which precludes the assessment of a different reasonable royalty, but that even the established ten per cent royalty can be collected only from the manufacturer and not from a user of the infringing machines. I will consider the issues arising from these claims in order.

A. CONDITIONS TO ASSESSMENT OF REASONABLE ROYALTY.

Defendant contends that under the statute a reasonable royalty can be assessed only when neither profits nor damages can be calculated with reasonable certainty, and that since both sides agree that profits can here be calculated with reasonable certainty, there is no occasion for resorting to the royalty method of compensation. There was a holding to that effect in the case of *Krentler-Arnold Co. v. Leman*, 24 F. (2d) 423 (D. C., Mass., 1928). However, it is clearly not the law in this Circuit, as is seen from the case of *Goodyear v. Overman*, 95 F. (2) 978 (C. C. A.

6, 1937), where the court found the profits of the defendant to be $29,221.97, and yet held that if the defendant desired a reasonable royalty the case would be remanded for further proceedings to determine it. In several cases, cited above, the courts have found the profits of defendant from infringement to be clearly zero; and yet despite the reasonable certainty in their calculation have made an award of a reasonable royalty. The statute is worded in the alternative, so that if either damages or profits cannot be calculated with reasonable certainty, the court can order the payment of a reasonable sum as profits or general damages.

The second ground on which defendant claims the conditions to the award of a reasonable royalty have not been satisfied is that the existence of damages to the plaintiff or unjust enrichment of the defendant—a statutory condition as well as a requirement of the case law on reasonable property—has not been shown. Defendant claims that its infringement caused no damage to plaintiff because it was not in competition with the Gordon Company and it would not have bought the latter's machines, even if it had not infringed, since they were inoperable to cut its cams. However, it does not follow that because the Gordon machine in its patented form would not have been purchased by Ford that plaintiff has suffered no damage. There is no reason to suppose that if defendant and others had not infringed plaintiff's patent the plaintiff and the Walcott Company would not have reached an agreement under which the cam-turning lathes with the Walcott improvements would have been supplied to the trade, with each company sharing in the proceeds. Since the plaintiff's pioneer patent was primarily responsible for the value of the Walcott machine, the probability exists that defendant's infringement caused substantial damage to plaintiff, which, however, it is obviously impossible to gauge with accuracy. Thus, not only unjust enrichment by defendant, which has already been found, but the probability of substantial damages exists here.

B. AMOUNT OF ROYALTY.

I come then directly to the question of the amount at which the royalty should be fixed. The facts as to the nature, utility, and advantages of the plaintiff's invention

and the extent of use by the defendant, and as to the savings realized by defendant by its infringement need not be repeated here. The plaintiff sold its machines for an outright cash consideration and neither it nor the Walcott Company attempted to collect a royalty on products from the purchasers. On each machine sold by plaintiff, the plaintiff paid to Gordon's company, the Production Machine Tool Company, a royalty of 10% of the purchase price. The specific evidence submitted on the question of reasonable royalty centers largely around settlement agreements entered into in 1929 and 1930 between the plaintiff and certain infringers. After the decision of the Circuit Court of Appeals in 1929 in the *Walcott* case in its favor, the plaintiff made an offer to practically every automotive company (including defendant) to release all claims against infringers on the basis of ¾ of a cent per cam turned on the infringing machines for past production, and $4,000 per machine for future production. Pursuant to this proposal, contracts were made with plaintiff by the White and Case Motor Companies for an amount equal to ¾ of a cent per cam (a total of $2,465.92 being paid by White and $1,055.28 by Case). At about the same time, separate contracts were entered into with plaintiff by White and Case, and also by the Chrysler and Nash companies, for licenses for future production on their infringing machines, at the rate of $2,000 for each machine used on four cylinder shafts and $3,000 for each machine used on six cylinder shafts. The total amount paid by all four companies for a release of the Gordon patent rights for the future was $66,000. However, in 1930, a settlement was negotiated by the General Motors Company on behalf of all members of the National Automobile Chamber of Commerce for a complete release of the plaintiff's claims for past and future infringement against all members, which superseded the previous settlements. In this deal, General Motors paid the plaintiff the sum of $195,000 (as against an original request by plaintiff for $1,250,000), in addition to the sums already paid by other companies, which the plaintiff was allowed to retain, making a total of $264,521.20. It appears that the General Motors payment was a lump sum settlement and not based upon production of cams; but the settlement price was subsequently apportioned among the various members of the Chamber of Com-

merce on the basis of their production of cams on the infringing machines. In this apportionment, refunds were made to the White and Case Companies for the amount paid by them in excess of their share, the amount repaid to the White Company being $3,705.92. The records which the witness from the General Motors Corporation had with him indicated that approximately 160,000,000 cams had been turned upon machines of infringers involved in the settlement, which makes the payment average approximately 1/7 of a cent per cam for past infringement alone, and considerably less if future production on the machines is considered.

Additional evidence submitted by plaintiff on this question includes testimony of production engineers of the White and Nash automobile companies that each company saved approximately thirty cents per shaft by the use of the Walcott machines in place of the old grinding method (the Nash shaft, however, having twelve cams), and the testimony of the White witness that the company paid a royalty of ten cents per shaft for machinery for grinding spline shafts with savings approximately the same as with the Walcott machines, and that in his opinion ten cents a shaft would be a fair royalty for the use of the latter.

Specific evidence submitted by defendant on the question of reasonable royalty was confined largely to the testimony of two witnesses familiar with sales practices in the machine tool industry that to their knowledge no production machine was ever sold in that industry on the basis of payment of a certain amount per piece for work produced upon it. The testimony of Brush that the Gordon invention was of no value to Ford was also submitted as evidence that no substantial payment for the use of the invention could be reasonable.

The most critical question in determining a reasonable royalty here relates to the basis to be adopted in fixing it. While it has been said that in fixing such a royalty the basis is not important if the amount is fair (*Motor Player Corp. v. Piano Motors Corp.*, 19 F. (2d) 993, 996, D. C., N. J., 1927), it seems obvious here, in view of the tremendous production of the defendant, that a royalty based upon production will probably result in a much greater recovery than a royalty based upon an outright payment

for each machine or a percentage of the selling price. There is comparatively little general discussion in the cases concerning the base to be used in fixing reasonable royalties, each case being dealt with by the courts on its own facts. An examination of the many cases dealing with royalty payments for patent rights (collected in Zabel, *The Patent Royalty Contract*) discloses that practically every conceivable basis has been used at one time or another in royalty contracts. This is not surprising, since the problem will vary with the type of patent involved, its economic importance, the use to which the licensee intends to put it, and many other factors, and since, moreover, in like situations reasonable men will differ as to the base to be used.

The problem of fixing a royalty for the manufacture and sale of a patented thing must be distinguished from that where a machine or process is involved. With the former, it seems to be most common to set the royalty on the basis of a fixed amount for each articulation of the patent or a fixed percentage of the selling price or manufacturing cost. *Reynolds Spring Co. v. L. A. Young Industries,* 101 F. (2d) 257 (C. C. A. 6, 1929); *Clark v. Schieble,* 248 Fed. 276 (C. C. A. 6, 1917); *Godwin v. International Steel Tie Co.,* 29 F. (2d) 476; *Motor Player Corp. v. Piano Motor Corp., supra.* Where the infringement has involved the use of a patented machine, royalties have frequently been assessed on the basis of production on the machine. *Gear Grinding Machine Co. v. Studebaker Corp.,* 4 F. (2d) 510 (C. C. A. 6, 1925); *Dunkley v. California Canneries, supra.* (See also *Empire v. DeLaski, supra,* and *Paper-Bag Machine* cases, 105 U. S. 766, 26 L. Ed. 959, 1882, which were cases of established royalties; and *Muther v. United Shoe Machinery Co.,* 21 F. (2d) 773, D. C., Mass., 1927.) This is not surprising, since the benefit to the user of patented machinery lies in its saving in production costs, and if the saving is great enough and the machine cannot otherwise be obtained, the user will find it to his advantage to pay a royalty based upon output. However, royalties for the use of machines have been fixed on many other bases, including periods of time (see *Burr v. Duryee,* 68 U. S. 531, 17 L. Ed. 650, 1863, and *Diamond Stone Sawing Machine Co. v. Brown,* 155 Fed. 753, C. C., N. Y., 1907, established

royalty cases), and a lump sum payment (*National Tube v. Mark, supra*).

The chief evidence in support of the production base for the reasonable royalty in this case is that of the settlement contracts negotiated by plaintiff with various automotive companies, chiefly White and Case. This leads to the question of the competence of this evidence to show such royalty. This question was considered in *Rude v. Westcott,* 130 U. S. 152, 164, 32 L. Ed. 888 (1889), where the Supreme Court rejected, as proof of an established royalty, evidence of contracts in settlement of past infringement, the Court saying:

> "It is clear that a payment of any sum in settlement of a claim for an alleged infringement cannot be taken as a standard to measure the value of the improvements patented, in determining the damages sustained by the owners of the patent in other cases of infringement. Many considerations other than the value of the improvements patented may induce the payment in such cases. The avoidance of the risk and expense of litigation will always be a potential motive for a settlement."

While this decision antedates the development of the reasonable royalty doctrine, the same ruling was made by the Court of Appeals of this Circuit in *General Motors Corp. v. Blackmore,* 53 F. (2d) 725, 729 (1931). A good argument has been made in favor of the admissibility of such evidence, *Cincinnati Car Co. v. New York Rapid Transit Corp., supra*; and in *Gear Grinding v. Studebaker, supra,* in this Circuit, royalty contracts based in part upon settlement were considered in fixing a reasonable royalty. However, under the *Blackmore* case, *supra,* the law is established in this Circuit that contracts in settlement of a past infringement alone are not competent to prove a reasonable royalty. (To the same effect, see *Dunkley v. California Canneries, supra.*)

There is, however, one group of settlement contracts between plaintiff and alleged infringers in 1929 and 1930 which does not come within the prohibition of *Rude v. Westcott*: namely, the contracts for the Gordon patent rights for future use of the Walcott machines. Since the paying parties to those contracts had the same free choice

as any licensee to pay royalties or refrain from using the machines and incur no liability to the patentee, the factors which have caused the courts to exclude contracts in settlement of past infringement are not present in the case of the contracts for the future. While the facts that refunds were later made to some of the parties to those contracts and that the contracts contained provisions barring their use in future litigation between the parties may affect the weight to be accorded them, the fact remains that the payments stipulated were made in the first instance and they consequently have some bearing on the question of reasonable royalty.

In view of the fact that the plaintiff never attempted to sell its machines for a royalty based upon output and that even in 1929 after its manufacturing activity had been terminated it did not attempt to collect such royalties for future use of infringing machines, and in view of the evidence indicating that it is not the usual practice in the machine tool and automotive industries to sell production machinery on that basis, I reach the conclusion that a reasonable royalty should not be assessed here on the basis of production. It seems evident that, apart from litigation, a production royalty would never have been asked for by plaintiff or paid by defendant. The case is different from *Gear Grinding v. Studebaker, supra,* and *Horvath v. McCord, supra,* where, so far as appears from the opinions of the court, the patentee did not sell the machine outright but licensed it only for royalties based on production. On the other hand, I cannot accede to defendant's contention that ten per cent of the sales price of the infringing machines is the limit of plaintiff's royalties. Apart from the objection that two infringers should not be able to determine the royalty of a patentee by setting a selling price between themselves, the ten per cent royalty payments were made *by* plaintiff to another and not *to* the plaintiff by purchasers of its machines. Moreover, they were made in the early years when plaintiff was building up a business in the patented machine, and since Gordon had the chief financial interest in the paying company they amounted in a large measure to a transfer of money from one pocket to another. They are therefore not a conclusive guide to a reasonable royalty to be paid to plaintiff for a release of its patent rights by a user of infringing machines.

In *Horvath v. McCord, supra,* the Court said:

> "In every case, the court should sift the evidence and place its determination of reasonable royalties on something tangible if it can be found in the record in order to avoid an arbitrary conclusion."

Mathematical exactitude in fixing a royalty, however, is recognized as impossible to attain and is not required. *Malleable Iron Range Co. v. Lee,* 263 Fed. 896, 898 (C. C. A. 7, 1920). The record here shows that plaintiff requested $4,000 per machine, and Chrysler, Nash, White, and Case paid $2,000 to $3,000 per machine (depending on the number of cams in the shaft to be turned) for a release of the Gordon patent rights after 1929 and 1930, when the most valuable years of the patent had expired. It must be recognized that defendant had been using a much better machine than the other automotive companies before the adoption of the Walcotts; on the other hand, the difficulty in using that machine for Model A production can be considered in fixing a royalty in 1925 as something which potentially might happen (see *Egry v. Standard, supra,* p. 443). Furthermore, defendant's larger production, while it made it practical for it to build special production machinery, also made labor-saving machinery of relatively more value to it than to the others. Considering that most of defendant's Walcott lathes were in use for nearly five years between the issuance of the patent and the said royalty contracts for the future, I think that $5,000 per machine represents a reasonable royalty for a license of the plaintiff's patent for the use of said machines. I find, as a conclusion of fact, that the plaintiff and defendant (or reasonably prudent men in their position) would have come to an agreement to pay the said amounts at the time if defendant had recognized the Walcott machines as infringing the plaintiff's patent. The total reasonable royalty thus found for all twenty-four infringing machines amounts to $120,000.

VI. QUESTIONS OF CLEAN HANDS AND OF INCREASE OF RECOVERY.

A. CLEAN HANDS.

It is now necessary to consider two issues involving the conduct of both parties in connection with the use of the infringing machines and the effort by plaintiff to recover for the infringement. The first concerns the claim of defendant that plaintiff has not come into this court with clean hands and that it is consequently barred from any relief. While a large part of the briefs has been devoted to this issue, lengthy discussion of it in my opinion is unnecessary. The claim in essence is that plaintiff, finding itself unable to make money out of the manufacture of its machines, has attempted to make it out of litigation; and in doing so has pursued a course of conduct which would be condemned by all fair-minded men, and which culminated in an act of bribery of a potential witness to keep him from testifying. Apart from the latter, the specific charges of improper conduct made by defendant can be summarized as follows:

1. Plaintiff, with full knowledge of defendant's use of the Walcott lathes, failed to give it notice of infringement, but instead wanted the defendant to infringe.

2. After the decision of the Court of Appeals in the *Walcott* case, plaintiff, realizing that it could recover only a relatively small royalty from the Walcott Company and that such recovery would result in the machines purchased from that company being fully licensed, entered into a consent decree awarding it nominal damages, in order to be able to prosecute its claims against defendant and other infringing users. Plaintiff thereafter picked on small infringers to get settlement contracts at a high per cam rate which it could use to secure heavy royalties from the large infringers.

3. Plaintiff has submitted evidence in this and previous lawsuits which was intentionally misleading, in particular testimony of Gordon in the *Walcott* case that grinding was the universal method of roughing cams prior to his invention, the introduction of the White and Case contracts without disclosure of the refunds, and the testimony of Gordon in this case as to a purported interview with de-

fendant's Mr. Wibel in regard to notice of infringement, and his testimony with respect to Westinghouse blueprints.

Defendant relies upon no specific cases in connection with these charges, but on the general doctrine of clean hands. Much of the charges, if true, are directed at the plaintiff's strategy in enforcing its rights under the Patent Act, which, even if not in accord with the highest ethical principles, is of doubtful validity as a defense to infringement. (See *Columbia Motor Car Co. v. Duerr & Co.*, 184 Fed. 893 (C. C. A. 2, 1911).)

However, I think the charges of defendant reflecting on plaintiff's conduct are exaggerated. It is unnecessary to analyze the evidence on each of defendant's charges in detail. However, by and large, the plaintiff has taken the normal course in enforcing its patent rights. It first sued the manufacturer of the infringing machines, and after getting a decree against it sued the user of the machines. There is no evidence here to establish that the decree for nominal damages in the *Walcott* case was not based upon the financial condition of the Walcott Company, as recited in the decree. Since, according to defendant, the National Automobile Chamber of Commerce had taken over the defense of that suit, it is difficult to see why it did not object to the decree if its effect was to penalize unjustly its members who used the infringing machines; but there is no evidence here of such objection. After the Walcott decree, plaintiff extended the same settlement terms to all infringers, although it is true that the White and Case companies were the only ones to settle at the ¾ cent per cam rate. While the evidence here fails to establish actual notice of infringement to defendant prior to 1929, it shows that plaintiff made an attempt to give notice to infringers in 1925 but was unable to prove to which companies it actually sent the notices. With respect to Gordon's testimony, it may be that he was sometimes mistaken and sometimes affected by self-interest, but on the whole he was fair and candid; and he readily conceded advantages in the Walcott machine over his own. Therefore, even if a defense based on these claims of defendant can be raised at this time, I find and conclude that the defense is not substantiated by the evidence.

The more serious charge of purchase by plaintiff of the secrecy of a potential witness—one Laughlin—remains

to be considered. The evidence relied upon by defendant in support of this charge can be summarized as follows: Laughlin, who was employed by the General Motors Corporation as a patent investigator in connection with the Gordon suit against it, obtained information and physical evidence with respect to the Stoddard-Dayton machine (claimed by defendant here as an anticipation of the Gordon invention), which he communicated to counsel for General Motors. After settlement of the General Motors suit, during the negotiations for which the Stoddard-Dayton defense was brought to plaintiff's attention, plaintiff retained Laughlin, paying him a total of more than $2,700. The initial payment of $1,000 was made on November 18, 1930, the same day on which plaintiff telegraphed defendant inviting settlement. In the main trial in this case, the witness Rupple testified that a brown paper drawing of the Stoddard-Dayton machine had disappeared from the files of his company. Rupple further stated that he had talked with Laughlin in regard to the machine and had delivered to him a cam machined upon it, which he had not seen thereafter. On the accounting, Gordon was questioned by defendant's counsel as to why Laughlin was hired, but received generally indefinite answers, although Gordon did state that Laughlin told him about the Stoddard-Dayton defense. Defendant claims that the only fair inference from this evidence is that Laughlin was retained by plaintiff to suppress the evidence he had obtained concerning the Stoddard-Dayton machine, and that, under *Keystone Driller Co. v. General Excavator Co.*, 290 U. S. 240, 78 L. Ed. 293 (1933), plaintiff is barred from recovery.

In the *Keystone* case, it appeared that in a prior suit involving the patent the plaintiff had paid one Clutter to keep secret the details of a prior use by him. The Court held that this conduct barred recovery under the doctrine of clean hands, regardless of whether the prior use constituted a good defense. From the *Keystone* case it is clear that if plaintiff hired Laughlin with the understanding that he would suppress evidence concerning the Stoddard-Dayton machine, it should be barred from recovery here; and *Goodyear v. Overman*, 95 F. (2d) 978 (C. C. A. 6, 1938), does not change this conclusion. However, as with all charges of fraud, the evidence to sustain this charge

must be clear and convincing (see 27 *C. J.* 62). While direct evidence is not required, the inference of bribery must be clear.

Examining the evidence with that principle in mind, we find that it affirmatively appears that the brown paper drawing disappeared before Laughlin came on the scene: Rupple testified that he had not seen it since 1927, and that he could not find it when Laughlin came looking for information. As to the cam turned over to Laughlin, it appears that Rupple made a drawing of it which was introduced in evidence on the main trial. Defendant had several other cams allegedly turned on the Stoddard-Dayton machine which it placed in evidence. Contrary to the situation in the *Keystone* case, Laughlin was not called to testify here, and there is no reason to suppose that if called he would have testified falsely or would have refused to produce the cam. While Gordon was not entirely clear in his testimony about the reason for employing Laughlin, he did state that Laughlin had told him and his attorneys of publications relating to the prior art which they investigated. It seems quite clear under the circumstances that the alleged action of paying Laughlin to conceal evidence could not have taken place without the active participation of plaintiff's attorneys. Even if dishonesty were to be imputed to them, they can at least be credited with sufficient intelligence not to arrange to conceal evidence which had been disclosed to General Motors and which was thus likely to be exposed at any time. It might also be expected that Gordon would have a much more convincing story, which could have been readily invented, if he was guilty of the alleged action. It is a much more natural inference from the evidence that the purpose of plaintiff in employing Laughlin was to ascertain and investigate defenses which might be raised in this lawsuit. I therefore think that defendant's charge is not well-founded; and I find specifically that the evidence does not sustain a finding that plaintiff retained Laughlin on the implied condition or with the purpose of purchasing his silence in this case.

B. INCREASE OF RECOVERY.

The final controversial issue in this accounting arises out of plaintiff's claim that the reasonable royalty should be tripled, at least for such part as applied to the period

subsequent to the decision of the Circuit Court of Appeals in the *Walcott* case on April 12, 1929. In the original trial of this case, Your Honor, after an elaborate inquiry into the conduct of the defendant in this case and its policy with respect to patent rights, found it not guilty of willful infringement and provided in the decree that an increase of damages would be denied. This provision, however, was stricken from the decree by the Circuit Court of Appeals, which held that the question of increase of damages should be reserved for the accounting.

The provisions of the Patent Act authorizing the court to increase damages up to three times the original amount (35 U. S. C. A. Secs. 67 and 70) have been held in this circuit not to apply to profits; and the plaintiff here makes no claim for an increase of profits. The statute itself does not state the grounds upon which an increase of damages should be made. The rule has accordingly been developed that the decision as to increase is largely at the discretion of the trial court, although that discretion is not unlimited, being subject to appellate revision if abused. *Topliff v. Topliff*, 145 U. S. 156, 36 L. Ed. 658 (1892). The object of the statute has been stated to be primarily punishment of the infringer and deterrence of others (*Seymour v. McCormick*, 57 U. S. 480, 14 L. Ed. 1024 (1853); *National Folding Box Co. v. Robertson's Estate*, 125 Fed. 524 (1903)). However, there is also the purpose of recompensing the plaintiff for losses incurred but not recoverable under the strict rules of law, *Beacon Folding Machine Co. v. Rotary Machine Co.*, 17 F. (2d) 934 (D. C., Mass., 1927); and this is evidenced by the practice frequently adopted, where grounds for increase are found, to increase the damages by an amount sufficient to take care of the plaintiff's expenses of litigation other than recoverable court costs.

The major grounds on which damages have been increased seem to fall under three main heads: (1) willful or deliberate infringement by defendant; (2) vexatious litigation; and (3) failure to keep adequate records of the infringement. The first ground stated is the primary one recognized by the courts. *Clark v. Schieble*, 248 Fed. 276 (C. C. A. 6, 1917); *K. W. Ignition Co. v. Temco Electric Motor Co.*, 283 Fed. 873 (C. C. A. 6, 1922); and practically every other case of increased damages. The decisions generally do not attempt to define willful infringe-

ment, instead dealing with each case upon its own special facts and circumstances. Generally speaking, use or sale of the thing found infringing, with knowledge of the claim of infringement and without a good faith defense, constitutes deliberate infringement. A good faith belief in a valid defense to infringement is inconsistent with deliberate infringement. *Clark v. Schieble, supra; Creagmile v. Bean Manufacturing Co.*, 32 F. Supp. 646 (D. C., Cal., 1940); *Page Machinery Co. v. Dow, Jones & Co., supra.* Generally, a conflict in court decisions on the validity or infringement of a patent negatives willful infringement. *Goodrich Co. v. Consolidated Co.*, 251 Fed. 617 (C. C. A. 2, 1921); *Metallic Rubber Tire Co. v. Hartford Rubber Works Co.*, 275 Fed. 315 (C. C. A. 2, 1921); *Expanded Metal Co. v. General Fireproofing Co.*, 247 Fed. 899 (D. C., Ohio, 1917); but this is not necessarily so, *Godwin v. International Steel Tie Co.*, 29 F. (2d) 476 (C. C. A. 6, 1928). Advice by counsel of invalidity of plaintiff's patent or non-infringement thereof ordinarily precludes deliberate infringement, but not necessarily so. *K. W. Ignition Co. v. Temco, supra; Expanded Metal Co. v. General Fireproofing Co., supra; Malleable Iron Range Co. v. Lee*, 263 Fed. 896 (C. C. A. 7, 1920). The test of good faith is not entirely subjective; and the infringer does not have to know that he has absolutely no rights, since if he decides to litigate rather than pay, he takes the risk of the outcome to some extent. *Consolidated Co. v. Diamond Rubber Co.*, 226 Fed. 455 (D. C., N. Y., 1919).

The two other grounds for the application of the statute above stated are rarely found alone in the cases and may be considered evidence of willfulness of defendant's infringement rather than separate grounds for increase. However, under the head of vexatious litigation, the action of an infringer in prolonging litigation, in obstruction and concealment of facts on the accounting, in transferring assets to prevent satisfaction of the decree, and in failing to make a reasonable settlement with plaintiff have all been considered factors supporting an increase of damages. *National Box Co. v. Robertson, supra; Fox v. Knickerbocker Engraving Co.*, 165 Fed. 442 (C. C. A. 2, 1908); *Weston Electrical Instrument Co. v. Empire Electrical Instrument Co.*, 155 Fed. 301 (C. C., N. Y., 1907); *Parker Rustproof Co. v. Ford Motor Co.*, 23 F. (2d) 502 (D. C.,

Mich., 1928). With respect to the failure of defendant to keep or the destruction of records of the infringement, the usual penalty applied by the courts for such conduct seems to be that of resolving doubts against the defendant on questions of fact which the records would have clarified, *Westinghouse v. Wagner, supra; Computing Scale Co. v. Toledo Computing Scale Co., supra; Schoenhofen Brewing Co. v. Alvey-Ferguson Co.*, 14 F. (2d) 945 (C. C. A. 7, 1926); however, it has also been considered a basis for increasing damages, *Overman Cushion Tire Co. v. Goodyear Tire & Rubber Co.*, 66 F. (2d) 361 (C. C. A. 2, 1933); *Fox v. Knickerbocker, supra.*

Plaintiff claims that the record on the accounting presents a different picture of defendant's conduct than that before Your Honor, justifying an increase of damages now.

It is contended that Your Honor's finding that the infringement was not deliberate was based upon the conclusion that upon receipt of notice in 1929 the defendant's only practicable alternative to continuing infringement was to develop a new machine, since the testimony indicated it could not return to the shapers. On the accounting, however, the defendant claims that it would have been a simple matter to adjust the shapers to Model A production, the reason given by defendant's counsel for not doing so being that it wanted to develop a new machine superior to any theretofore used; and in the meantime it continued to use the infringing machines without making any offer to compensate the plaintiff. Plaintiff further claims that the destruction of records by defendant and obstructive tactics were responsible for the prolonged accounting. It is contended that defendant did not file a frank account, but prepared it with the intention of showing a loss, regardless of the facts, to support its contention that it does not owe plaintiff one penny. Specifically, plaintiff charges defendant with bad faith on the accounting in presenting the Ford-Westinghouse machine as a standard of comparison, despite deviations from the original and a failure to ascertain whether it would turn out a usable product; in changing its position from the main trial as to the usability of the shapers on the Model A shaft and the efficiency of the Walcott machines; in "pressure" applied to the witness Franklin; in the use of obsolete drawings of the shaper to support its claim of straightening; in charges of unethical conduct

on the part of plaintiff and its attorneys; and in other respects. Plaintiff shows that this litigation has been expensive to it, a total of $19,463.70 having been spent upon it until close to the end of its case on the accounting, which sum does not include counsel fees. It is contended by plaintiff that if defendant's conduct does not constitute willful infringement, no conduct ever does.

The most important question concerns the good faith of defendant in continuing infringement after 1929 and in compelling the plaintiff to relitigate the question of infringement, since, in my opinion, an increase of damages here, if granted at all, must be predicated upon such conduct. This is the very question which was previously passed upon by Your Honor. The facts relevant to that question, as developed in both the main trial and the accounting, should here be reviewed.

Defendant bought the first eighteen infringing machines before plaintiff's patent issued, and no knowledge of the claim of infringement has been shown until after the Court of Appeals decision in the *Walcott* case on April 12, 1929. When defendant received the notice of infringement on June 13, 1929, it had twenty-one Walcott lathes turning out its camshaft production. All of its camshaft shapers had been scrapped some time before. Defendant's first action was to contact the Walcott Company which had guaranteed it against patent infringement, and which stated it was trying to work out a deal under which it would take over the Gordon patent. These negotiations continued through November, 1929, when they collapsed. In the meantime, defendant took steps to find a non-infringing substitute to replace the Walcott machines. With this in mind, it investigated the new Walcott heads about July, 1929, but concluded they were infringing. About two months later, Pioch conceived his idea of a milling machine, and in October began experimenting with a single cutter. It was decided to build such a machine, and designs were drawn up and the machine ordered March 20, 1930, it being placed on the production line on May 13, 1930. This machine proving successful, five more were ordered on August 26, 1930, and installed between December 1930 and February 4, 1931. The last Walcotts were finally removed from cam production on March 16, 1931, nearly two years after the Court of Appeals decisions. No consideration was given by de-

fendant at any time to a return to the shapers, although, according to Pioch (D. A. R. 1152-1153), it would not have been necessary to build an initial experimental machine as with the Pioch but an entire battery could have been ordered at once. According to a statement of defendant's counsel, this was because defendant decided that since it had to shift to a new machine it would build one that would surpass all previous types; while Pioch states it never occurred to him to go back to the shaper.

During this period, defendant made no overtures to pay the plaintiff for the use of its patent. At first, it was advised by its attorney Halbert that the consensus of legal opinion was that the Gordon patent would be sustained in future litigation. Defendant was excluded at plaintiff's insistence from the General Motors settlement, because General Motors was representing the National Automobile Chamber of Commerce, of which Ford was not a member. On November 18, 1930, a telegram inviting settlement was sent to defendant; but on the advice of its present attorney, Mr. Farley, that it had a good defense to infringement, it did not reply. Shortly thereafter, plaintiff filed its bill in this case. (It appears defendant later offered plaintiff the rights to the Pioch machine in settlement of its claim.)

On this record, defendant's infringement was clearly innocent until 1929, it having no knowledge of a claim of infringement. This fact seems important also in appraising its later conduct. While a violent commencement of infringement does not seem to be essential to an increase of damages (see *Consolidated Co. v. Rubber Co., supra,* where the court held that defendant's infringement commenced innocently and later became willful), the presence or absence of this factor is important. Most of the cases of deliberate infringement are ones where the defendant began infringing after warning or with knowledge of the plaintiff's claim. When defendant learned it was using machines held infringing in 1929, it had a serious problem on its hands. If it had been notified of the infringement in 1925 and continued to use them, it would be fair to have required it to have a substitute ready upon decision of infringement.

The District Court has previously gone into the question of defendant's duty in 1929 when it found that the Walcott machines it was using had been held infringing.

It would seem that if it did not want to pay plaintiff for a release of its patent rights it was incumbent upon it to discontinue their use as soon as practicable, at the risk of having its infringement held deliberate if the court adhered to the decision of infringement. However, in view of the fact that the infringement was not of a product but of the use of one of hundreds of machines in its line of production, it would seem that it should be allowed a reasonable time to decide its course of action and secure a substitute, before its action should be held willful or wanton. I know of no case on this point, and neither side has cited any, but this conclusion seems in harmony with the general principles of the cases on deliberate infringement.

Whether defendant did act with reasonable promptness is a question of fact considered on the main trial by Your Honor. The record here is somewhat stronger against the defendant than on the main trial, because of the evidence that defendant could have returned to the shaper, and could have done so more rapidly than to develop a new machine. (It would, however, have been necessary to build new machines, which might have taken nearly as long as to develop the Pioch machines.) While nearly two years elapsed before the Walcotts were finally replaced, the fact that it spent considerable time negotiating with the Walcott Company which had given it a patent guarantee and the lack of damage to plaintiff, other than deprivation of royalties for defendant's use during this period, may be considered factors in its favor (although I cannot agree with counsel for defendant that competition between plaintiff and defendant and actual damage to plaintiff is an essential element of a case for increased damages).

In view of the lack of proof of notice or knowledge of infringement by defendant prior to 1929 and the other circumstances mentioned, I am inclined toward the view taken by the District Court that defendant's infringement should not be held willful. However, since Your Honor has previously thoroughly considered the question of the willfulness of defendant's infringement after 1929 as well as that of its good faith in compelling plaintiff to relitigate the question of infringement, I prefer not to make a positive recommendation on these questions, but rather to report the facts to the court together with the contentions on both

sides, pointing out to the court the difference in the factual picture before it and that developed from the accounting. This procedure was adopted by the master in *Muther v. United Shoe Machinery Co., supra,* and was approved by the court in that case.

Insofar, however, as the claim for increased damages is based upon defendant's practice in keeping records of the infringement and its conduct on the accounting, which matters were not before Your Honor on the main trial, I reach the conclusion, upon consideration of the question, that no basis for an increase is there to be found. With respect to the question of records, defendant has a well organized accounting system, which has been shown to be as elaborate as is customary or necessary in the automotive infringing field. It does not keep costs by operations in producing parts, but such costs would be of little practical use outside of a patent accounting case like this, and the expense of keeping them would not be justified. Because of their physical bulk defendant can retain only a small portion of the records made daily in its plant; and it has developed an elaborate policy, embodied in written instructions, as to the length of time each type of record will be kept. So far as the records pertinent to this case are concerned, defendant's conduct can be summed up by saying that it followed rigidly its routine practice in keeping records, neither making any that it would not ordinarily have made nor destroying any for the express purpose of avoiding liability here. Time studies and overhead breakdown and inventory records have been destroyed, some of the latter since the commencement of this suit; and no separate account was kept of the concurrent production on the Pioch and Walcott machines. While, however, these records would have facilitated to some extent the determination of profits, the cases cited above where damages have been increased on this ground involve more positive action in destroying records. Even if all the records plaintiff claims defendant should have kept after notice in 1929 were available, there would still be wide gaps in the evidence necessary to determine profits with certainty here. There is also some point to defendant's contention that it would have been difficult to tell in advance of the accounting the precise records needed upon it. Finally, as previously in-

dicated, the usual penalty for mere failure to keep records, without more, is to resolve doubts on the questions the records would have cleared up against the defendant, and there is no such aggravated conduct here as to require the application of a more stringent penalty.

Similarly, I do not feel that defendant's conduct on the accounting provides a basis for increasing damages. I do not agree with plaintiff that defendant's whole purpose has been to show a loss irrespective of the facts. Defendant hired reputable independent accountants to prepare its statements of account, and, while I have disagreed with many of their conclusions (as also I have disagreed with some of plaintiff's conclusions), I think they filed honest accounts. There is considerable support for their conclusions on the issues (such as straightening overhead treatment) on which I have sided with plaintiff. Nor did defendant pursue here a policy of obstruction and concealment of facts found in the *Parker Rustproof* and other similar cases. Defendant readily produced records and witnesses requested by the plaintiff, even in instances where the result was adverse to it. It answered the questions propounded in the master's orders of account in considerable detail, with the exception of one to which it made objection. With respect to the various allegedly improper actions of defendant on the accounting pointed to by plaintiff, I cannot see anything going beyond legitimate defense of a lawsuit, except possibly that involving the witness Franklin and the failure of defendant to state in its original accounts that the shaper set forth as a standard of comparison for the Model A shaft was a modification of the original machine. Some of the said actions, such as the use of obsolete shaper drawings, seem clearly to have been pure inadvertence on its part. The situation here seems to me to resemble that in *Wrigley v. Larson, supra* (an unfair competition case), where, although the accounts filed by defendant showed a loss as against substantial profits found by the court, the court refused to assess the fees of plaintiff's accountants against it on the ground that the defendant's accounts had correctly set forth the underlying facts from which an account could be stated, the differences in result being attributable to differences in the application of principles.

With respect to the charges made by defendant as to plaintiff's conduct, the only case cited where such charges were specifically considered as a basis of an increase of damages is that of *Goodyear v. Overman, supra,* in this Circuit, which, however, was reversed on the question of increase upon rehearing. The charges made by defendant are of a serious nature, and I have found them not well founded; however, there have been a great many charges of unfair conduct of the other party in the briefs on both sides in this case. Moreover, while I have not given credit to the charges, if, as must be assumed to be the fact here, defendant did not know of plaintiff's claim of infringement until 1929, its feeling that it has been the aggrieved party is understandable.

In view of these considerations, I do not think that an increase of damages should be awarded, unless the court should be of the opinion that the difference on the record here from the main trial with respect to the defendant's action in continuing infringement after notice in 1929 should justify a different finding from that previously made by the court.

VIII. INTEREST.

Under my recommendations, the plaintiff is entitled to its choice of $206,824.22 as defendant's profits or $120,000 as its damages. It is clear that plaintiff is not entitled to both. *Goodyear v. Overman, supra.* The question of interest on the award has not been discussed in the briefs; but, since *Duplate v. Triplex, supra,* the rule seems to be the same for both profits and reasonable royalty that interest runs from the time the damages are liquidated (generally, the date of the master's report), in the absence of special circumstances, such as deliberate infringement. *General Motors v. Dailey,* 93 F. (2d) 938 (C. C. A. 6, 1937); *Horvath v. McCord, supra*; *Reynolds Spring v. L. A. Young Industries, supra*; *Klooster, Patent Accountings,* 76.

Respectfully submitted,

(Sgd) Donald L. Quaife,
Special Master.

Detroit, Michigan,
March 3, 1941.

SCHEDULE A

PRODUCTION OF CAMSHAFTS ON INFRINGING MACHINES

(For the Period from June 16, 1925 to March 15, 1931)

Month		*Model T T-410*	*Model A A-6250*	*Tractor F-446*
June 16 to 30,	1925	100,575		5,242
July	"	172,650		9,681
August	"	92,700		9,245
September	"	119,500		8,745
October	"	222,950		9,363
November	"	212,950		8,825
December	"	171,880		8,872
Totals, June 16 to Dec. 31, 1925		1,093,205		59,973
January	1926	157,400		11,995
February	"	154,000		12,195
March	"	178,200		15,092
April	"	170,375		10,124
May	"	155,139		8,823
June	"	149,069		9,645
July	"	141,877		6,554
August	"	151,676		6,766
September	"	141,814		6,552
October	"	145,830		4,914
November	"	110,418		4,830
December	"	43,407		1,621
Totals, 1926		1,699,205		99,111
January	1927	83,909		4,636
February	"	68,810		7,032
March	"	93,781		13,510
April	"	80,555		9,704
May	"	83,520		6,944
June	"	13,109		7,398
July	"	12,711		6,531
August	"	14,837		9,977
September	"	18,703		9,737
October	"	16,625		9,606
November	"	12,285	2,553	10,380
December	"	7,241	6,734	5,250
Totals, 1927		506,086	9,287	100,705
January	1928	9,191	13,509	7,795
February	"	7,844	19,512	5,360
March	"	8,041	32,295	2,720
April	"	8,435	44,503	
May	"	12,508	55,306	
June	"	14,878	67,866	
July	"	13,712	69,537	
August	"	13,491	96,098	
September	"	11,760	89,353	
October	"	9,445	117,348	
November	"	5,444	118,145	
December	"	5,699	119,984	
Totals, 1928		120,448	843,456	15,875

Schedule A to Master's Report

Month		*Model T T-410*	*Model A A-6250*	*Tractor F-446*
January	1929	1,222	165,184	
February	"		160,960	
March	"		175,960	
April	"		180,249	
May	"		194,724	
June	"		186,297	
July	"		198,713	
August	"		198,044	
September	"		154,561	
October	"		174,545	
November	"		109,155	
December	"		63,601	
Totals, 1929		1,222	1,961,993	
January	1930		90,529	
February	"		114,714	
March	"		156,386	
April	"		192,275	
May	"		188,833	
June	"		175,441	
July	"		58,814	
August	"		107,808	
September	"		99,128	
October	"		83,699	
November	"		76,478	
December	"		55,160	
Totals, 1930			1,399,265	
January	1931		41,340	
February	"		36,578	
March	"		14,585	
Totals, 1931			92,503	
Grand Totals		3,420,166	4,306,504	275,664

Note: Of the June, 1929, production, 76,032 shafts were produced from June 1 to 12, inclusive, and 110,265 from June 13 to 30, inclusive. The total production subsequent to June 13, 1929 (the date notice of infringement was received by defendant from plaintiff) was 2,500,652 Model A shafts.

SCHEDULE B

PRORATION OF PRODUCTION ON CAMSHAFTS BETWEEN PIOCH AND WALCOTT MACHINES, MAY 14, 1930 TO MARCH 15, 1931, INCLUSIVE

Month	Machines Available		Shifts	Production Per Shift on Piochs	Total Production	Pioch Production	Walcott Production
	Melling	Pioch					
May, 1930 (May 14-30 for Pioch production)	21	1	37 (May 14-30)	240	197,713	8,880	188,833
June	21	1	62	240	190,321	14,880	175,441
July	21	1	22	240	64,094	5,280	58,814
August	21	1	48	240	119,328	11,520	107,808
September	21	1	47	240	110,408	11,280	99,128
October	21	1	39.5	240	93,179	9,480	83,699
November	21	1	36	240	85,118	8,640	76,478
December	21	1	26.5	240	61,520	6,360	55,160
January, 1931 (1st half)	21	2	9	480		4,320	
January (2nd half)	21	4	18	960	62,940 (Full mo.)	17,280	41,340 (Full mo.)
February 2 and 3	21	4	5	960	11,886	4,800	7,086*
February 4-28	13	6	32	1,440	75,572	46,080	29,492*
March 1-15	13	6	17	1,440	39,065	24,480	14,585
					1,111,144	173,280	937,864

*Total for full month, February, 1931—36,578 shafts.

NO MISSING PAGES

PUBLISHER'S NOTICE:

Pages are missing due to an error in original pagination; content is uninterrupted.

CLERK'S NOTICE OF THE FILING OF THE MASTER'S REPORT.

(Dated March 3, 1941.)

COPY

Swan, Frye & Hardesty
Attorneys-at-Law
1403 Ford Building
Detroit, Michigan

In re: The Gordon Form Lathe Company

vs.

Ford Motor Company

Equity Docket No. 4564.

Dear Sirs:

Please take notice that on March 3rd, 1941, Donald L. Quaife filed his report as Special Master in the above entitled cause.

Very truly yours,

/s/ GEORGE M. READ,
GEORGE M. READ, *Clerk*,
U. S. District Court.

H.

cc. To BOTTUM, HUDNALL, LECHER, MCNAMARA & MICHAEL, Milwaukee, Wisconsin.

BODMAN, LONGLEY, BOGLE, MIDDLETON & FARLEY, 1400 Buhl Bldg., Detroit, Mich.

PLAINTIFF'S OBJECTIONS TO MASTER'S REPORT.

(Filed March 13, 1941.)

Now COMES The Gordon Form Lathe Company, Plaintiff herein, and states and files this its objections to the report of the Honorable Donald L. Quaife, Special Master herein, filed in the office of the Clerk of this Court on the 3rd day of March, 1941, in the following particulars, to-wit:

1. To the Master's finding of the amount of defendant's profits, savings, gains and advantages attributable to its use of the infringing Walcott machines on its production of Model A cam shafts over its use of other avail-

able standards of comparison, in so far only as such finding understates the actual amount of such profits, savings, gains and advantages by reason of:

A. The failure to adopt the Landis grinder as the proper standard of comparison.

B. The adoption, as a standard of comparison, of a modification of the Ford cam shaper which the Master assumes would permit of each such shaft being machined in a single operation.

C. In the alternative and without prejudice to the foregoing objections: The failure to find that of all defendant's proposed standards of comparison involving the use of the Ford cam shaper as a standard of comparison, the double shaper method (two Ford cam shapers to machine each shaft) is the only proper standard of comparison, if under applicable law the Ford cam shaper may be regarded at all as a proper standard of comparison.

2. To the statement (Report p. 23 [R. p. 24])* that the "parallel head Walcott" was adopted by defendant after Pioch's inspection thereof in 1929, whereas the fact is, and the Master should have found and ruled, that the same was *not* adopted by defendant.

Respectfully submitted,

THE GORDON FORM LATHE COMPANY,
By: /sgd/ JOHN W. MICHAEL,
/sgd/ GEORGE D. SPOHN,
/sgd/ F. O. RICHEY,
/sgd/ B. D. WATTS,
Attorneys for Plaintiff.

GEORGE R. FRYE,
Solicitor for Plaintiff,
1403 Ford Building,
Detroit, Michigan.

Dated: March 13, 1941.

---

* PRINTER'S NOTE: In the Plaintiff's Objections to the Master's Report and in the Exceptions of the Defendant following, the Record pages have been inserted in square brackets after the references to the pages of the original Report, i.e. (Report p. 23 [R. p. 24].)

EXCEPTIONS OF DEFENDANT TO THE REPORT OF THE SPECIAL MASTER.

(Filed March 15, 1941.)

Now comes defendant, Ford Motor Company, by its attorneys, and presents the following exceptions to the report of the Special Master Donald L. Quaife filed in the above entitled action on March 3, 1941.

1. The Master erred in holding that "the testimony of some (though by no means all) of its (defendant's) witnesses was * * * affected by the self interest of their employer" (Report p. 8 [R. p. 10]) and in that he did not name those of defendant's witnesses with proper record references whose testimony he deemed was so affected and those of defendant's witnesses whose testimony was not so affected.

2. The Master erred in that he did not limit the accounting period to the date of actual notice of alleged infringement, viz: June 13, 1929, and in holding that the doctrine of *Wine v. Enterprise*, 297 U. S. 387 and not the doctrine of *Horvath v. McCord*, 100 F. (2d) 326 (C. C. A. 6) applies here to relieve plaintiff, who had licensed others to manufacture the patented machine prior to the issuance of his patent, and who had full and complete knowledge of the use by defendant of the alleged infringing machines, from the clear bounden duty in law and in equity of giving actual, clear and unequivocal, written notice to defendant promptly upon the issuance of plaintiff's patent and its claim of infringement thereof against defendant. (Report pp. 9 to 12 inc. [R. pp. 11 to 14 inc.].)

3. The Master erred in that he did not limit the accounting period for use of the infringing machines from the date of June 13, 1929 and in holding that "no defense of laches as such is made here" (Master's Report p. 12, lines 4 and 3 from bottom of page [R. pp. 14 and 15]) in the face of the proofs and defendant's contentions and arguments (Defendant's Main Brief before Master p. 34 and Conclusion 6, page 140) wherein the defenses of both laches and estoppel were fully and clearly urged against any recovery from defendant prior to June 13, 1929, the date of the only proved actual notice to defendant of plaintiff's patent and plaintiff's claim of infringement thereof.

4. The Master erred as a matter of law and of fact in holding that the non-tilting tool of the modified Walcott machine fully disclosed and published in the Melling patent No. 1,634,550 issued July 5, 1927, four months prior to the commencement of defendant's manufacture of Model A shafts, was not a construction fully available to defendant as a standard of comparison. (Report pp. 22, 23 [R. pp. 23, 24].)

5. The Master erred in that he held the modified Walcott machine with a non-tilting tool to be an infringement of the Gordon patent in suit when no proof was offered by plaintiff to warrant or substantiate any such holding, when such holding is not supported by any record evidence and when such holding and interpretation covers prior art constructions and is made in disregard of file wrapper limitation, estoppels and prior art constructions, none of which limitations, estoppels or prior art constructions were given proper consideration by the Master.

6. The Master erred when, in holding the Westinghouse machine not available to defendant as a standard of comparison, he referred to "experts called by the plaintiff" (Report p. 24 [R. p. 25]) when the sole and singular witness who testified for the plaintiff re this phase of the case was the patentee Gordon, chief owner of the plaintiff's capital stock and whose "testimony was understandingly affected by self-interest" (compare Report p. 8 [R. p. 10] —and Exception 1).

7. The Master erred in view of the concession by plaintiff (Report p. 26 [R. p. 27]) that the Westinghouse machine was available to defendant in that he held the said Westinghouse machine was not a proper standard of comparison on the ground that there is no sufficiently reliable evidence of the speeds obtainable with it in actual production. This holding of the Master is in direct conflict with the uncontradicted testimony of the disinterested witnesses Truxal, Ladley (Westinghouse Company employees not affected with any self interest of the defendant, Ford Motor Company), the testimony of defendant's experienced time study employees, Klopsic and Rauser, and the practical operation and demonstration of the machine for over a full hour's demonstration and time study thereof before the Master, this holding being directly *contra* the law in

this Circuit in *National Tube v. Mark,* 10 F. (2d) 430, the authority of which the Master recognized as binding (Report pp. 30, 31 [R. pp. 30, 31]) upon him for the Ford Shapers as a standard of comparison but which he refused to accept as binding with respect to the Westinghouse machine.

8. The Master erred in that he refused to accept the Ford Shapers as a proper standard of comparison for the Ford Tractor F446 Camshafts in the face of his Finding of Fact that the uncontroverted evidence of Oberhoffken, Brush and Pioch (Report p. 33 [R. p. 33]) compelled a holding that the Ford Shapers constituted a proper standard of comparison for the Model A Ford shafts which differed in no material respect except in dimensions from the Ford Tractor Shafts.

9. The Master erred in that he held *contra* the authority of *Tilghman v. Proctor,* 125 U. S. 136, that because defendant's actual practice was to use grinders for roughing its tractor cam shafts (such use as found by the Master being because tractor production was so small) (Report p. 35 [R. pp. 34, 35]) defendant may not employ as a standard of comparison its old cam shaft shapers which were as clearly available to defendant at any time after 1914 for machining its tractor cam shafts as for either its Model T or Model A shafts.

10. The Master erred in that he did not hold that plaintiff in selecting and insisting upon the use of the Landis grinders, the worst standard of comparison, precluded itself under the Equitable Maxim—"He who seeks Equity must do Equity" from recovering anything but nominal damages.

11. The Master erred in that he refused to allow the cost of direct labor incontrovertibly proved by a host of defendant's witnesses (not all of whom were affected by the "self interest of their employer") and found by the Master as a fact (Report p. 42 [R. p. 41]) to have actually been incurred because of an extra straightening operation found necessary by defendant in its use of the Walcott machines and which operation actually was not used or found necessary by defendant in its use of the Ford Shapers; the Master's ruling in this regard being not only

directly *contra* the rule of law enunciated by the Supreme Court in *Tilghman v. Proctor,* but in effect being a holding that, also *contra* the weight of authority, while a defendant may not have any allowance or deduction for savings resulting from the use of superior facilities (*Duplate* case) it should be penalized for not making a highly problematical better use of the infringing machine.

12. The Master erred in that in spite of the uncontroverted testimony of Oberhoffken, Brush and Pioch and the Master's Finding of Fact (Report p. 47 [R. p. 45]) that the inertia of the parts and not "the cutting speed of the tool is the limiting factor in the speed of the shaper," he made the entirely unwarranted and unsupported inference that machining time of the shaper for the Model A shafts should be reduced 18 percent from defendant's accountant's figures.

13. The Master erred in that when he computed the figure of $206,824.22 as profit to defendant, he tacked on to alleged savings of direct labor costs as a part of defendant's profits, the item of total burden, or overhead, averaging a 150 percent addition.

14. The Master erred in that, although he found plaintiff's claim of the grinder as a standard of comparison unjust, he accepted the testimony of plaintiff's accountant Moise, based solely on the use of such standard, as warranting an addition of 150 percent burden figure to direct labor costs, which addition comprises thirty-one items (Report p. 48 [R. p. 47]) the only two of which, namely, Depreciation and Maintenance, as conceded by counsel for plaintiff and by plaintiff's expert, would be materially affected by the change from defendant's non-infringing prior art shapers to the alleged infringing Walcott machines.

15. The Master erred in that he refused to allow any apportionment of alleged profits in the face of defendant having introduced in evidence the patents to Melling, No. 1,512,995, Ex. 312 and No. 1,655,655, Ex. 209, both relating to patentable features included in the infringing Walcott machine and patentable over the patent in suit and defendant having proved that any profits which could be ascribed to defendant resulted entirely because of the inclusion of these added patentable features.

16. The Master erred in that he did not allow an apportionment of alleged profits based on said added patentable features when after defendant offered evidence to show that any advantages or savings resulted entirely because of the inclusion in the Walcott machines of patented features, additional to and patentable over the invention of the patent in suit, the burden of proof then devolved upon plaintiff to apportion the profits, and plaintiff then failed to offer any evidence bearing either on the patentability of the improvements covered by the Melling patents, Exs. 209 and 312, or bearing on apportionment of profits.

17. The Master erred in that he awarded alleged profits to plaintiff which were in fact not earned but which, even if so earned, could only have resulted from the added patented features of patents, Exs. 209 and 312.

18. The Master erred in that he did not hold that plaintiff failed to carry its burden of proof with respect to apportionment of defendant's alleged profits, and in that he awarded other than nominal damages.

19. The Master erred in that he held that the alleged entire advantages obtained from the use of the Walcott machines accrued to the plaintiff in that said holding constitutes an inference unwarranted by the evidence, the uncontroverted showing by defendant that the tilting tool, the only feature to which the claims of the patent in suit are directed, was not essential in the Walcott machines, but that the machines would operate even more satisfactorily when non-tilting tool heads were substituted for the tilting heads.

20. The Master erred in that he refused to accept as a standard of comparison for defendant's manufacture of Model A shafts (which manufacture did not begin until November 1927) the Walcott machines provided with non-tilting tools and heads of the type shown in the Melling patent No. 1,643,550, granted July 5, 1927, Ex. 313.

21. The Master erred in that he refused to follow the rule of law with respect to apportionment of profits established in *Mason v. Graham*, 90 U. S. 261, the Master recognizing the applicability of such rule of law to the situation in the instant case (Report p. 70 [R. p. 67]) but erroneously holding that such rule of law was modified or overruled by the Supreme Court in its decision in the case

of *Duplate v. Triplex*, 298 U. S. 448 (Report p. 71 [R. p. 68]) the question of apportionment of profits neither having been considered nor ruled upon by the Supreme Court in the latter case.

22. The Master erred in granting to plaintiff all of the alleged profits of defendant and in failing to apportion such profits and by making a proper deduction therefrom for the portion attributable to the added patentable features of the Melling patents Exs. 209 and 312 which rendered the infringing Walcott machines commercially operable and usable by defendant when the record established and the Court of Appeals held by its opinion in this case, that the Gordon machine as covered by the Gordon patent in suit was not usable by defendant.

23. The Master erred in that he did not hold, in view of the admissions against interest of plaintiff's President, Mr. Gordon, that the royalty of 10 percent of the sales price accepted and paid on each and every one of the patented machines that were sold outright by plaintiff, fixed the maximum value recognized by plaintiff of Gordon's patent rights.

24. The Master erred in failing to hold that the plaintiff, having effected a settlement with the Walcott Machine Tool Company, the manufacturer of the Walcott machines used by defendant, and the plaintiff having made such settlement with notice of the Walcott guarantee to the defendant, the plaintiff waived all claim to the recovery of its established royalty and therefore should have had an award of nominal damages only in this accounting.

25. The Master erred in basing his award of reasonable royalty upon contracts entered into between the plaintiff and the Chrysler, Nash, White and Case Companies when such contracts were in the main based upon settlement for past infringement, when such contracts contained express provisions that they should not be used in any future litigation by either of the parties thereto, when such contracts provided they should be null and void in the event of a future settlement made on behalf of any party for the automotive industry, and when the uncontroverted evidence clearly established that such a settlement had been made and that at the time the contracts were offered in evidence they were in fact and in law null and void.

26. The Master erred in that he stated the payments of $2,000 for the use of a four cylinder Walcott camshaft lathe or $3,000 for the use of a six cylinder Walcott lathe paid by the Chrysler, Nash, White and Case Companies have some bearing on the question of reasonable royalty (Report p. 84 [R. p. 79]).

27. The Master erred in that he found "as a conclusion of fact" (Report p. 85 [R. p. 80]) the defendant would have agreed to pay the sum of $5,000 per machine as a reasonable royalty when there is nothing tangible in the record to warrant or support such finding, and moreover, he erred in that he failed to use for a determination of reasonable royalty, the tangible record evidence relative to the 10 percent of the sales price royalty paid by plaintiff.

28. The Master erred in taking the entirely arbitrary amount of $5,000 per machine as representing a reasonable royalty in the absence of any tangible basis to be found in the record to support such amount.

29. The Master erred when in holding the lump sum payments allegedly made by the Chrysler, Nash, White and Case Companies for future use of Walcott machines owned by and in use in the manufacturing establishments of said Companies, the Master failed to take into consideration the fact that such alleged payments, although clearly shown by the record to have been made under duress, as these Companies were bound by the decision in the *Walcott* case, were given for a license to use the said Walcott machines for the remaining unexpired term of the Gordon patent in suit, that the alleged lump sum payments were made in 1930 and the Gordon patent in suit, not expiring until 1942, such payments covered 12 full years of future use of the said Walcott machines.

30. The Master erred in that he used the 1930 lump sum payments per machine made under duress and in that he failed to compute such payment on an annual or yearly basis by taking into account the number of years of future life of the patent in suit, namely 12 years, and in that he failed to find that as six of the twenty-four Walcott machines purchased by defendant were in use in defendant's plant for a period of two years only, and as the remaining sixteen Walcott machines were in use in defendant's plant for a period of six years only such 1930 payments made

for 12 years' future use have no proper application to defendant's use of said Walcott machines.

31. The Master erred in that when he computed the cost to defendant of machining its Model F tractor camshafts, he found that the life of a grinding wheel would be but for the grinding of fifty camshafts, which finding is contrary to the uncontroverted testimony of the defendant's accountant, Woehrle, who testified after an examination of the records of the defendant that grinding wheels as actually used by defendant for the grinding of its Model F tractor camshafts had a life of fifty-five hours, which figure was formally accepted by counsel for the plaintiff, page 37, proceedings of July 18, 1938.

32. The Master erred in not ruling that as no evidence of damage to plaintiff was offered by plaintiff and that as plaintiff's patented machine was not usable by defendant, plaintiff suffered no damage and as defendant could not use plaintiff's machine, defendant could not, and did not, realize any profit from plaintiff's invention and therefore there should be an award of nominal damages only.

33. The Master erred in finding that defendant had realized profits from the use of plaintiff's invention or profits to which the plaintiff is justly entitled.

34. The Master erred in failing to find that on the entire record the plaintiff was entitled only to an award of nominal damages.

Respectfully submitted,

FORD MOTOR COMPANY,
BODMAN, LONGLEY, BOGLE, MIDDLETON & FARLEY,
Attorneys.

I. JOSEPH FARLEY,
DRURY W. COOPER,
Of Counsel.

Dated: March 15, 1941.

MOTION FOR ACTION UPON MASTER'S REPORT AND OBJECTIONS THERETO.

(Filed March 22, 1941.)

Now comes Plaintiff, THE GORDON FORM LATHE COMPANY, and upon the pleadings, proceedings, papers and exhibits herein, and upon the annexed Affidavit of Todd L. Moise dated March 19, 1941, moves this Honorable Court for action upon the report of the Honorable Donald L. Quaife, Special Master herein, filed in the office of the Clerk of this Court March 3, 1941, and upon the objections thereto heretofore filed herein.

Respectfully,

THE GORDON FORM LATHE COMPANY,
By: JOHN W. MICHAEL,
GEORGE D. SPOHN,
Attorneys for Plaintiff.

GEORGE R. FRYE,
1403 Ford Building,
Detroit, Michigan,
Solicitor for Plaintiff.

AFFIDAVIT OF TODD L. MOISE.

STATE OF OHIO,
COUNTY OF LORAIN, ss.

TODD L. MOISE, being first duly sworn, states upon his oath:

(1) That he is a certified public accountant, having obtained his certificate to practice as such certified public accountant under the laws of the State of Ohio; that he is a member of the firm of Moise and Burgess, a firm of certified public accountants, having their principal office and place of business in Elyria, Ohio, and a further office in Cleveland, Ohio.

(2) That he was employed by The Gordon Form Lathe Company, plaintiff in an action entitled; The Gordon Form Lathe Company, plaintiff, v. Ford Motor Company, defendant, now pending in the District Court of the United States for the Eastern District of Michigan, Southern Division, In Equity, Docket No. 4564, to consider and advise with

plaintiff on all accounting matters involved in the accounting proceedings recently had in said matter. That he is the same Moise named as a witness and who heretofore testified in said matter on behalf of plaintiff and who is referred to in the report of the Special Master filed in said matter on the 3rd day of March, 1941.

(3) That he has read and analyzed the report of the Special Master herein, so filed, and has prepared two schedules setting forth the actual profits, gains, savings, and advantages of defendant attributable to its use of the infringing Walcott machines on its production of Model A cam shafts over its use of alternative standards of comparison. That said schedules are attached hereto and designated respectively "Schedule I" and "Schedule II."

(4) That in Schedule I affiant has computed and set forth the amount of defendant's profits, savings, gains and advantages attributable to its use of the infringing Walcott machines on its production of Model A cam shafts over the use of the Landis Grinder as a standard of comparison; that in Schedule II affiant has computed and set forth defendant's profits, savings, gains and advantages attributable to its use of the infringing Walcott machines on its production of Model A cam shafts over the use of two Ford cam shapers to machine each shaft as a standard of comparison.

(5) That the amount of the profits, savings, gains and advantages so set forth in Schedules I and II, attached hereto, are readily computable with reasonable certainty having recourse only to the record on file in this matter, and have been so computed by affiant; that in the computation of defendant's profits, savings, gains and advantages attributable to defendant's use of the infringing machines, as set forth in Schedules I and II, affiant has given effect to and adopted all of the Master's findings with respect to the defendant's production of its Model A cam shafts, excepting only, with respect to each such schedule, the Master's finding on proper standard of comparison.

(6) That Schedules I and II, attached hereto, are alternative schedules. If the Court shall find that the proper standard of comparison on defendant's production of its Model A cam shafts is the Landis Grinder, Schedule I sets forth the amount of defendant's profits, savings,

gains and advantages attributable to defendant's use of the infringing Walcott machines over the use of such Landis Grinder as a standard of comparison; that if the Court shall find that the use of two Ford cam shapers to machine each shaft is a proper standard of comparison, Schedule II sets forth the amount of defendant's profits, savings, gains and advantages attributable to defendant's use of the infringing Walcott machines over the use of such two Ford cam shapers to machine each shaft.

(7) That Schedules III and IV, attached hereto, are alternative recapitulation schedules of costs of cam roughing operations. These schedules are in the form similar to that set forth on the last page of the report of the Master filed herein. There is set forth in Schedule III defendant's profits, savings, gains and advantages attributable to its use of the infringing Walcott machines on its production of Model A cam shafts over the use of the Landis Grinder as a standard of comparison. This schedule sets forth such savings, profits, gains and advantages in the sum of $793,773.60, and adopts the Master's finding of such profits, savings, gains and advantages on the defendant's production of its Model T and Model F cam shafts. If the Court shall find that the proper standard of comparison on defendant's production of its Model A cam shafts is the Landis Grinder, then the total of defendant's profits, savings, gains and advantages attributable to its use of the infringing Walcott machines on its production of all shafts throughout the accounting period is $901,922.67 as set forth in Schedule III.

There is set forth in Schedule IV defendant's profits, savings, gains and advantages attributable to its use of the infringing Walcott machines on its production of Model A cam shafts over the use of two Ford cam shapers to machine each shaft as a standard of comparison. This schedule sets forth such savings, profits, gains and advantages in the sum of $296,025.46, and adopts the Master's finding of such profits, savings, gains and advantages on the defendant's production of its Model T and Model F cam shafts. If the Court shall find that the proper standard of comparison on defendant's production of its Model A cam shafts is two Ford cam shapers to machine each shaft, then the total of defendant's profits, savings, gains and advantages attributable to its use of the infringing Walcott ma-

chines on its production of all shafts throughout the accounting period is $404,174.53 as set forth in Schedule IV.

TODD L. MOISE.

Subscribed and sworn to before me this 19th day of March, 1941.

HILDRETH HECOCK,

(Notarial Seal) *Notary Public, Lorain County, Ohio.*

My Commission Expires May 16, 1942.

NO MISSING PAGES

PUBLISHER'S NOTICE:

Pages are missing due to an error in original pagination; content is uninterrupted.

NOTICE OF MOTION FOR ACTION UPON MASTER'S REPORT.

(Filed March 22, 1941.)

To: I. Joseph Farley, Esq.,
c/o Bodman, Longley, Bogle, Middleton & Farley,
1400 Buhl Building,
Detroit, Michigan.

Sir:

The Honorable Arthur J. Tuttle, Judge of the above named Court, having expressed his willingness to hear the parties herein March 31, 1941, on the Master's report and objections thereto heretofore filed herein, and such date being acceptable to Plaintiff, and counsel for Defendant having stated his approval of such date, notice is hereby given that the annexed Motion will be brought on for hearing before the said Honorable Arthur J. Tuttle in his courtroom in the Federal Building, Detroit, Michigan, on said date at 10:00 A. M. or as soon thereafter as counsel may be heard.

GEORGE R. FRYE,
1403 Ford Building,
Detroit, Michigan,
Solicitor for Plaintiff.

JOHN W. MICHAEL,
Of Counsel.

Service of a copy of the foregoing Notice, attached Motion, and accompanying Affidavit, acknowledged this 22nd day of March, 1941.

I. JOSEPH FARLEY,
Attorney for Defendant.

OPINION OF THE HON. ARTHUR J. TUTTLE, DISTRICT JUDGE, ON THE OBJECTIONS TO THE MASTER'S REPORT.

(Rendered April 4, 1941.)

Detroit, Michigan,
Friday, April 4, 1941.
10:30 o'clock A. M.

PRESENT:

Honorable Arthur J. Tuttle,
District Judge.

APPEARANCES:

Messrs. Lecher, Michael, Whyte & Spohn,
(110 East Wisconsin Avenue, Milwaukee, Wisconsin), by

John W. Michael, Esq., and
George D. Spohn, Esq.,

Appearing in behalf of the Plaintiff.

Messrs. Bodman, Longley, Bogle, Middleton & Farley,
(Detroit, Michigan), by

I. J. Farley, Esq., and
Thomas Hughes, Esq.,

Appearing in behalf of the Defendant.

OPINION OF THE COURT.

The Court: Well, I think I have given counsel every opportunity to teach me about this proposition, and if I have not learned a lesson it is the fault of my head, and not counsel.

And right here at the end, in order to declare to you, and not having thought about something that was unnecessary, or to save time and get through, I think I did begin to show you my hand. I had to do that in order to save you time, so from where I have stopped you and told you I didn't want to hear you, you began to get a notion of what I was thinking about, and to go right into the meat of it at the outset now, having the worst of it over, I am going to affirm the Master as to every finding he has made here, except one, and that is as to that overhead.

Now, to go back and drag after that rough job of ploughing.

There were very few of those findings that just satisfied me, and I can just imagine they do not just satisfy him, or anyone else. I don't know about that, but here is a case that just bristles with propositions, that whatever you hold and decide, you are not just satisfied with it, and there is not one of those that I have not felt that, I guess there aren't, anyway, that I felt that way, but anyway many of them I have had that feeling about.

I started out with the idea that I could improve it and I racked my brain as to the proper standard, and every time I worked out some different conclusion than the Master, except as to that overhead, I wound up more dissatisfied than I was with what he did.

Now, that is the truth about it. I have tried to get something better, and I thought I could, but I did not feel just right about it, and I tested it out in every direction, and whatever I selected, and whatever I decided on as different, I wound up more dissatisfied, found it more difficult to square it with my conscience and my head as to what would be right to do, and as to those things I find the report very excellent.

An immense job has been done, an immense task, that this Court has been relieved of by that reference, and by that work.

I can see counsel have been helpful to him and he profited by it, and he produced an excellent report, and as to those things I do not change it. He says it better than I could say it. I not only adopt the conclusion he has reached, but I adopt his approach to it, and his language.

One of the things that I did have great difficulty about, that perhaps I will mention, is whether or not the possibility of computing, not the need for it, not the fact that there had been profit,—I felt there had been profit as a result of the infringement, but the ability either of counsel or parties or witnesses or of the Master or of this Court, the difficulties of doing it, I think we all would agree were great, and the thing I spent much time trying to follow was whether or not the difficulties in the obstacles were not so great that it was impossible to do it, but my final analysis of that is that whenever we are confronted with computing anything in the judicial tribunal, that we have many times

that we have to determine amounts, and we have to do it, with all varieties of cases, and whenever there is necessity of doing that with a certain degree of certainty, we tell ourselves in the law, and we tell the jury and everybody else we cannot guess, but we can draw reasonable conclusions.

That is all right to say, but it is the application of those things that are difficult. We do the best we can to not guess, but to draw reasonable conclusions from proven and established facts, and I am satisfied that there have been profits, substantial profits, and therefore it is the duty of the Court to go as high as we can go fairly from the conclusions, but not so high as to go into the field of guessing, and men with all kinds of judgment find themselves confronted with that.

Somebody is a good judge of horses and of the market. They look at a horse and they can within a few dollars tell you what the horse is worth, if they are a good enough judge. Another man, whose judgment is not so good, will tell you he knows absolutely it is worth $25, and he is just as certain about that as the other man. He would have no hesitancy in making that finding. His doubt is when he tries to go into the higher amounts, and that is when he gets in bad.

The Judge finds his head, and the jury too, in that condition. And not only do we have that situation with reference to all matters, but different kinds of proof. One branch of it may be proved, might be to the complete satisfaction of everybody,—but I doubt if we could say that in this case,—but to that degree of satisfaction that a Judge is willing to rely on it, and then another element of the damages, or the profits, or whatever we are dealing with, may be proved in a much lesser degree, the proof supporting it, and maybe the Court or the tribunal deciding it may find it so uncertain, so lacking in substance and directness and exactness and safeguards that the Court does not feel free to rely on it.

Now, the fact that you find some of that that you can not rely on does not relieve the Court at all, or excuse the Court at all from taking the other thing he can rely on, so I say in this case, for reasons I will discuss more, I felt that the overhead was something I could not rely on, but that does not mean that there was not profit, and that I should

not determine such profits as I think have been properly proven, and so I do go over the Master and get away from that uncertainty of apportionment and all that.

I follow the Master right up to that overhead burden all the way along.

And it is fortunate now that we have this overhead determined, because as it turns out that the Master is right about that, and I am wrong about it, it would be very easy for the Court of Appeals. They have got the figures right there and the amount on there and the reasons, the two lines of reasons to figure it out, and I say, while I change it, right there, I am very frank to say that there are very few things in this case that I approach with that feeling of uncertainty; that I am inclined to judge too much, I think.

There are very few lawsuits that I decide that I do not feel any question about that. I am too much that way.

In all lawsuits that I decide I very seldom am bothered with burden of proof. If there is any proof, either one way or the other, and strong, I am not bothered about that, but I am confessing to you right now that here is a case, with all these controversial questions, that is very debatable and close, but I like the Master's conclusions better than anyone, except now on this question of the overhead.

And I have conjured more with that than anything else here. It is a very interesting thing. I love mathematics. I have liked mathematics all the while I was in college. Anything that partakes of mathematics I just love to conjure on.

It is not that I am good with it, but I like it. It is like music. I cannot take a bit of music, but I love it. The mathematics of the thing appealed to me as a matter of interest, and here it gets to be a very solemn and serious matter.

Now, it seems to me these are the things that prevent me from holding with the Master, and make me upset that overhead.

In the first place, I do not think that a defendant's own books, or anyone else's own books are binding upon them as to results for which they are not kept. And I do not think that is in conflict with Judge Cardozo's decision. Books are kept for the purpose of showing certain things, and they are evidence against me, if they tend that way. It is like an admission, but in taking an admission we inter-

pret a person and what they mean, and not by taking and putting some warped construction on their language. It is what they meant to admit, and the same way when a person keeps their books. What was their object? What was their purpose? You can say if it was good enough for them, when they get into a lawsuit they ought to be bound by it.

But now let us see, what is the purpose of keeping these books in this way. The final purpose was for the Ford Motor Company to know what their automobile had cost them, in the biggest, broadest sense of the word, so that they would know what to charge for an automobile. Now, that is what they were getting at. That is the purpose of it, and there were many departments that contributed pieces to that automobile, and then within that department many operations, and of course this keeping of this record for that final purpose, they just would naturally want to do in a way that what would be practical and economical. Anyone that can keep books themselves can understand that.

When we get to keeping books and are bossed by the Banking Commissioner, or Internal Revenue Department, or somebody else that does not know very much about our business, we find out how troublesome it is, because we were keeping them for our purpose, a certain purpose.

Now, if anyone does come in and take out books that are kept for a certain purpose, and prove a certain thing, and they use those books to prove something else that are not in keeping with it, why of course you would reach the wrong result.

Now, when the Ford Motor Company came to divide up their overhead they put something like 31 different items of expense into what they call their overhead burden.

That in the first place is an arbitrary decision and something that they do to fit their purpose and their needs.

A different kind of a factory, operated in a different kind of a way might put some other items in, and they might not put all of these items in.

Now, in order to tell what the product costs, of course, you have finally have got to get every item of expense of an entire operation. You have got to get it in there somewhere, because if you leave anything out you are just selling on a wrong basis. You are valuing your product on the wrong basis. But if you get it all in, it does not matter on

how arbitrary you are as to the way you do it for this purpose that the Ford has established of finally charging. They can do it as any sort of a method. They would select a method of direct labor, apportioned according to direct labor, in money, as I understand it, on that labor cost, is that right?

Mr. Spohn: The labor cost in money.

The Court: They used the direct labor, the cost of it?

Mr. Spohn: In dollars.

The Court: In dollars, yes. Now, they might have used the hour basis or time basis. I don't know how it would come out. It might not be so satisfactory in some ways, but for their final purpose now it would have been all right, because if you put it all in it would be all right, and there are many, you can conceive of many other different ways of doing it.

Now, we are taking this not for the purpose of finding out how much the car should cost when it was done, but we are now attempting to use what they have used for building up that final figure they wanted to use to apply, and, by the way, this cost that they have built up, and this ratio which they have built up for dividing the overhead burden is applied to this.

Last night's paper said it was the largest factory in the world, probably, and as I understand it it applied to all the property they own, not only in Detroit, but all over the world. That is what somebody said here. They have something like 100,000 employees, millions of dollars worth of property.

Now, for their purpose they have built up this kind of an overhead burden, and this particular method of dividing it.

Now, because it fits them for that purpose does not mean that it works out a correct result at all when you try to fetch it down to one of the many departments, and to the making of one little part that goes into the automobile, and then tracing it down to one of something like fifty operations in making that one little part that goes into the automobile.

I think it is plain to see that as applied to this, that where it is applied absolutely does not fit at all, and does work a very unjust result.

Now, I am not trying to be personal, and I do not talk about my old farm, and that sort of thing, from any egotistical standpoint, but in this world if we just talk about the facts we know about, and we get along better than if we try to talk about things we don't know about.

One of the things I have down in my mind is that I do not think this system, this system as applied now to the great Ford Corporation, and to determining what an automobile is costing the corporation to make, before they begin to sell it, so they can know how much to charge for it, and put in a fair profit, and get ready to figure out how much they can afford to spend for selling it, and will have to spend for selling it, and then know what they will charge the final chap that uses it, fits that fine and works out after that all right, because they have to use up this surplus, or this overhead burden, and this takes care of it, and puts it in where it belongs, and is fine.

Now, as I get down to try to apply this one operation out of many operations in making this one part out of the many parts that go into that automobile, and try to use those figures, used for this other purpose, to determine whether or not the defendant Ford Automobile Company profited, and how much they profited, and apply their system by which I reach out and get part of that overhead, I don't think it fits them any better than it would fit my farm.

Now, in determining out there what my apples cost, and whether or not—I do not have a thing to say about what I will get for them,—I have to take what they give, but that is the difference between making automobiles and being a farmer. That is the reason automobile manufacturers get rich and farmers get poor. That is it right there. I put my finger right there on the difference.

The automobile manufacturer can figure up what his automobile costs, and add his selling expense, and a fair profit, and make that as his selling price, while the fellow that raises apples, he does all that figuring and adds in his overhead, and finds out how much they cost him, and then he does not have a word to say about what he gets. He takes what they give him and carries out the result in red. That is the difference.

But, anyway, I do with that farm just exactly what the Ford Automobile Company does in the way of putting that into the cost of my apples out there. My taxes go in there

and all of it, and I can show you right on my books that I figure it out, how much it cost me that year to produce my apples. All right.

Now, let me assume that I have got two fellows out there doing a job with the horses and I can buy a Ford tractor and one man do the same job. There may be some other elements about these things there, on the cost or something, which you should take into account; feeding the old horse. But I am leaving that out.

Suppose, instead of horses—so as to get rid of the problem of feeding the horses—suppose I had gone from two machines over to one machine, and that is all I have done in that particular direction, I have saved the cost of one man.

And suppose I had that other system—that I really don't have—of apportioning. I just divide the total cost, in which the taxes goes, by the number of bushels, to know what the cost is. But, anyway, I would save the one man out there by putting in a Ford tractor.

Now, suppose it turns out that I have infringed, and they are suing me, and I have got to pay the profit. What was my actual profit, in other words, when I reduced the expense there? Is it possible that I can go back there, because I have divided the number of bushels into finding out what it cost me to produce a bushel of apples—I have to put in the taxes, is it possible that I can now say, when all in the world that happened, and all the honest to goodness saving I have got, I have saved the services of one man.

Now, suppose I had this system of computing overhead, could I, by some method—not by integral or any other kind of calculus, or differential equations or conic sections, can I go into a court of justice and be made to pay when they sue me for infringement? It turns out that the thing I bought was an infringement, and I have got to pay for it. I did save something. I actually saved one hired man. And I won't tell you how cheap the wages are. That is all I saved, as a matter of fact. I can't figure out, on the farm, and as I apply it to my own business, how I saved another cent.

You can say, maybe it cost more for me to supervise—I do it Sundays, anyway—to supervise my men out there. They just do not connect. But I did save the price of one

man. I owe that. It is just as plain to me that I owe it as can be.

But even whether I had the other system—suppose I had that on my books, and when I got sued, they brought in my books, and if I had divided up the apples and put the taxes in—and I do do that. But what has it got to do with the other?

Now, you see, you are using it for a different purpose. And we are reaching, as I see it, a wrong result by it. I just do not think it will work.

Now, here is the only other theory I can get that in on, and that shows that we must think logically and think what we are figuring for.

If I was going to build a plant now, to manufacture, I could build these if I had machinery that would take less men and all that. In other words, I am keeping this in mind in reaching my conclusion, that it can be said in one theory, reasoning for one purpose, like when I am building my plant and getting ready to operate, or if you were getting crowded out of the Ford plant and had to build another; I can say that, that when you shorten the time to do a certain job, in a way you can take credit for your taxes, you can take credit for your depreciation of your building? Why? If I can do something in six months instead of a year, my taxes during six months are only half as much as they are in a year. The depreciation on my building is only half as much. And, so, if I can cut out 30 seconds somewhere when they are figuring, on that theory it is all right.

But that would be on the proposition of building a plant, which you could use as money. But you take the Ford factory out here, as a matter of fact, my illustration of a farm there applies to this one operation. As a matter of fact, it did not eliminate a single official. It did not raise or decrease the salary of a single executive officer. It did not change the size of any building out there.

If I had a farm that was so small, that by putting in something out there you would not have to buy another farm to get into it, that is one situation. But the trouble is we are putting two things together in a way that misleads us, I think.

I do not think that this bookkeeping and this division out at the Ford Company on the basis of manpower, when

we come to apply it down to this, I don't think it will apply.

It is like Kettering's illustration there. It will take one hen three weeks to hatch a set of eggs, then two hens can do it in a week and half. It just doesn't work out; you can't do it.

It didn't happen. It didn't change the Ford taxes. It didn't change. And the theory by which you say it might do it and that you can do it, as I say, would apply if you were building a new outfit and starting in new.

And it might happen in a particular division. There might be a bottle-neck, where the shortening down of a few men or some space, that you could, by means of the infringing article, use less space and save the building of a new building, and all that. Those are things that might happen. But it is something that did not happen in this case; that is the trouble with it.

You might get over to the matter of depreciation as to your particular machine, and then we go over to the other. That is something entirely different. Here you have taken a measuring stick of the direct labor, and based on that you say that because you reduce that one-third, why, therefore, you get rid of one-third of the portion of the overhead tax which otherwise would have been applied to it. But I just think there is a little hitch in there, but which nobody has intended as a trick; I don't mean that. But it is one of those things we run into in life, where we are likely to fall into a false conclusion. And I am fully convinced that this is one of those situations.

I think I have already pointed out instances in which this can be used, and the Ford use of it is one of them.

And then, I say, there might be a bottle-neck where you could apply it.

But, let me show an instance where it would lead to a result which seems to me as unfortunate and as absurd as this one is. I don't think it is any more absurd than the one at the Ford, because, as I look at it, I say it didn't actually affect the taxes at all, it didn't change hardly any of those items.

And here would be one illustration. Going back out to the little village of Leslie, the old telephone company I organized out there more than forty years ago, they are just changing that over and putting in the automatic system,

and there is going to be a little brick building out there with not a soul in it, just these automatic finders going around, I take it, down to the Bell Company here that I have been through. They have an acre of floor space over there with those automatic machines in there. When I was in the telephone business out in Leslie, I think we had 14 employees out there. They are firing them all and putting that little building out there.

Well, they are going to have some taxes to pay. The tax fellow will be around. And they are going to have some overhead. But they just don't bear any relation. Out there, they wouldn't. There is a situation where they wouldn't bear any relation, the labor, I don't think.

I presume the machinery is worth more than those girls sitting there on the chairs they sit in, and the hoods they have on their heads, and the old board they plug into. I dare say that the taxable valuation out there is going to be greatly increased, and yet you wipe out entirely the labor charge.

Now, there is a situation where they would be in an awful hump-up in the benefits that would be charged to them in the way of overhead, for taxes, and everything else that the Bell has. I don't know what the overhead is, but just think of the overhead they would get out there if they were being sued, and this was a benefit, when, as a matter of fact, their taxes would be increased and they should have them credited the other way on that, if it was going to enter into it at all.

I just can't justify the use of that; and, therefore, I wipe that out.

As I see the things in here, you can't be real sure about them. There can be an argument made on the other side of that, but I do feel pretty sure about that item. I just think it is taken from their books and used for an entirely different purpose, for reaching an absolutely wrong result.

And the things said in favor of justifying it, are brought in, not in justification of the system used, but that there are some other things that would counter-balance it.

And when I find a theory of law leading me into something that I can just see and know did not happen, I begin to look for holes in the theory of the law, and the first time I looked at that overhead, I said about it as I would out at the farm; I would say, "I have saved the use of a

man out on the farm; that is what I have saved, and that is all I have saved."

And if they were claiming I had saved part of my taxes, I would say, "Well, where do you get that?" And then they would find that I had been dividing up my taxes to show how much my apples cost a bushel, my head would just begin to whirl then.

Now, I believe I have analyzed that correctly, that we are keeping those books for a different purpose. For that purpose they are right. It is all right to take into account taxes in saying what my apples cost, but when I get to figuring what I have saved by a machine that will save the use of a man, I have got to look and see what I have actually saved, and I have saved the use of a man.

But under ordinary circumstances, you haven't saved anything in taxes. And I think that is what happened out at Ford's. If they had to pay that if they got the other right, then if we made them pay this additional amount, it would just be wrong.

It wouldn't change the taxes. As a matter of fact, it would be more than doubling it because of an item that did not actually exist.

I believe I have already indicated, I had difficulty enough in saying we could compute damages here. Not that there were damages. I think I see that and feel that. But when it comes to the computing of them—and I have gone along with that. I think you are able to do it. But then when you add on to that this other item, I couldn't see that. In the first place, it isn't accurate, but it is just as I see it, it isn't right. It is wrong, I believe.

Now, I don't think there is any necessity of writing any written opinion in this case at all. You have such an excellent report from the Master, and I adopt his results and I adopt his reasons for his results, except on this one thing, and I just disallow that item, and I have stated here as best I could, but very roughly, my line of reasoning as to why I don't allow that item, and why I sustain the exceptions to it.

Now, I do not think it is necessary for me to say if this should be—and for the present I won't, to make my interlocutory decree, so it is complete, and if it stood on my interlocutory decree, the plaintiff still has a right to select the

greater, whether it is profits or damages in the way of reasonable royalty.

And I recognize that this holding changes the high spots for the other way, but they still have the right to select the higher; and, of course, that right will remain after the case is reviewed. So I do not think I need to discuss that, what the decision is. If it stood on my decision and that was finally affirmed, they would elect, and they would have a right to elect the reasonable royalty.

Now, we have all gone without our lunch, and it is late. I could go on talking about reasonable royalty. But I take the Master's finding on that. The same way as those other things here, that I have overruled your objection, for instance, that Mr. Richey and you have so ably discussed to me about the standard. I have got that in mind. I could say a lot about it, but I would keep you until night if I take up each one.

But I like what the Master said so well, that I adopt what he said. And it is only this one that I did not see the same as the Master did, that I have discussed so fully.

Now, you have the benefit of these rough, oral remarks of mine in my decision, which I will sign, if you want, or you can just have them written and put them into the record, and I will appreciate it if you will cut out bad grammar and put good grammar in the place of it.

Mr. Farley: There is just one thing occurs to me. The plaintiffs have made exceptions, but I don't think the matter is of such a nature that they should, but you recall you have affirmed the Master on every point, but the Master did not make a direct holding upon any increase in damages. I believe, however, that is out of the case, but I would prefer to include that.

The Court: I will say I decide there is to be no increase in damages.

Mr. Farley: I would like to have that included.

The Court: I would be glad to include that, and I intended to mention it.

Mr. Spohn: If your Honor please, in the plaintiff's exceptions, the second one, we called the Court's attention to what we believe was a typographical omission in the Master's report. I don't think there is any doubt about that, is there, Mr. Farley?

Mr. Farley: No.

Mr. Spohn: The Master omitted the word "not" at one place in the sentence.

The Court: The Master is here and you are here and I am here, but I always tell them they must not change anything that is in the files, but with all of us here, if you will write that in there, put your initials on and I will put mine, too. Why don't you put it in there?

Mr. Spohn: The Master is here, and he will explain that.

The Master: I haven't spoken on this so far, because I do not think I have any right to do it, but on this particular typographical error, I would like to say something, because I think I can clear it up for both sides.

Mr. Farley: I think I know what the Master has in mind.

The Master: I think my language was a little ambiguous. Mr. Spohn points out on page 23 (Record p. 24) of my report where I say, in finding that the modified Walcott machine was an infringing machine, I add this:

> "My conclusion is reinforced by the fact that the same conclusion was reached by defendant's chief tool designer, Pioch, after inspecting the parallel head Walcott in 1929, as a possible method of avoiding infringement and was thereafter adopted by defendant."

Now, plaintiff filed exceptions on the ground that it was a typographical error, since the machine was not actually adopted by the defendant; that is, this modified machine. What I intended to say—and I realize my language is ambiguous—is that the conclusion that Pioch reached of infringement was thereafter adopted by defendant.

Mr. Spohn: Oh, I see.

The Court: Do you want to change it?

Mr. Spohn: With that understanding in the record, it is all right.

The Court: You have got it right here.

Mr. Spohn: We have got it right here in the record. I mis-read that language.

The Court: All right.

Mr. Farley: I was going to tell you about that, because I read it right, I knew what he was saying.

The Court: Well, I am very much obliged to you gentlemen.

MASTER'S ORDER FOR STATEMENT OF ACCOUNT.

(Dated July 6, 1937.)

Before Donald L. Quaife, Esq., Special Master:

Pursuant to decree on mandate filed and enrolled in the above entitled suit on June 28, 1937, and in furtherance of the reference therein made for the purposes of (1) taking, stating and reporting an account of the profits, gains and advantages which the defendant has derived, received, earned, made or saved since June 16, 1925, by reason of or through its infringement of the Letters Patent of the United States No. 1,542,803 to Gordon and Redlin; (2) assessing the damages which plaintiff has sustained since June 16, 1925, or shall sustain by reason of such infringement by the defendant; (3) taking evidence and reporting on the question of an increase of such damages; and (4) computing a reasonable royalty for the use of the infringing machines by defendant; it is upon plaintiff's motion hereby

ORDERED that the defendant, Ford Motor Company, file with me on or before the 6th day of September, 1937, at my office, Room .... in the Federal Building, Detroit, Michigan, an account or statement in writing, under oath, together with proof of service of two copies thereof on plaintiff's solicitor, which said account or statement shall set forth and include in detail the following items:

1. The total number of infringing machines at any time used by defendant within the period from June 16, 1925, to date.
2. The date of acquisition of each such machine.

* * * * *

15. The cost of repair and maintenance of each such machine, detailed from defendant's monthly, quarterly, annual or other periodic reports compiled with respect to each such machine.
16. The power consumption per work hour of each such machine, detailed from defendant's actual cost records compiled with respect to each such machine.
17. State, per defendant's records, the number, cost (per tool or per unit of tool purchase), type, purpose, and steel test of tools used with respect to each such ma-

chine. If such tools were made by defendant, state cost per defendant's records.

* * * * *

19. State separately the cost of tool maintenance and repair for each such machine, detailed from defendant's actual cost records compiled with respect to each such machine.

20. An itemized statement of defendant's costs per shaft, as detailed from defendant's cost records, of turning the cams thereon by the use of said infringing machines.

* * * * *

25. Point out and describe the method, step by step, and means employed by defendant immediately prior to the adoption and use of said infringing machines for reducing to finished size the rough forged cams of automobile cam shafts.

26. If the method and means referred to in question 25 included a machine other than a grinder for removing the excess metal, describe it, its mode of operation, the particular type or character of shaft or shafts it was used on, and the particular model designation of automobile for which such shafts were designed, and furnish prints or drawings of each such shaft.

27. State the number of machines, if any, described in answer to question 26, at any time used by defendant prior to the adoption and use of said infringing machines; the cost of each such machine (as reflected by defendant's actual cost records if made by defendant or substantiated by manufacturer's invoice if purchased); the date of acquisition of each such machine; the date of first use of each such machine; the date of last use of each such machine; the unit production per hour per machine, while in operation; and the cost per shaft of such operation, such cost to be compiled from defendant's actual cost records.

28. If defendant used a machine other than a grinder as described under question 26, state, per defendant's records, the number, cost (per tool or per unit of tool purchase), and type of cutting tools used in each such

machine. If such tools were made by defendant, state cost per defendant's records.

* * * * *

30. If defendant used a machine other than a grinder, as described under question 26, state cost of repair and maintenance of each such machine, detailed from defendant's monthly, quarterly, annual, or other periodic reports compiled with respect to each such machine.

31. If defendant used a machine other than a grinder under question 26, state separately the cost of cutting tool maintenance and repair for each such machine, detailed from defendant's monthly, quarterly, annual, or other periodic reports compiled with respect to such machine.

32. If defendant used a machine other than a grinder under question 26, state the power consumption per work hour of each such machine, detailed from defendant's actual cost records compiled with respect to such machine.

* * * * *

34. Point out and describe the operations, if any, performed on the cams of automobile cam shafts subsequent to work thereon by the machine referred to in question 26, and furnish a detailed statement of the costs of such operations, such costs to be compiled from defendant's actual cost records.

35. Point out and describe the method, step by step, and means employed by defendant immediately prior to the adoption and use of said infringing machines for reducing to finished size the rough forged cams of tractor cam shafts.

36. If the method and means referred to in question 35 included a machine other than a grinder for removing the excess metal, describe it, its mode of operation, the particular type or character of shaft or shafts it was used on, and the particular model designation of tractor for which such shafts were designed, and furnish prints or drawings of each such shaft.

37. State the number of machines, if any, described in answer to question 36, at any time used by defendant prior to the adoption and use of said infringing ma-

chines; the cost of each such machine (as reflected by defendant's actual cost records if made by defendant or substantiated by manufacturer's invoice if purchased); the date of acquisition of each such machine; the date of first use of each such machine; the date of last use of each such machine; the unit production per hour per machine, while in operation; and the cost per shaft of such operation, such cost to be compiled from defendant's actual cost records.

38. If defendant used a machine other than a grinder, as described under question 36, state, per defendant's records, the number, cost (per tool or per unit of tool purchase), and type of cutting tools used in each such machine. If such tools were made by defendant, state cost per defendant's records.

39. With respect to cutting tools purchased and/or made, as stated under question 38, state which of said tools so purchased and/or made were for purposes of replacement.

40. If defendant used a machine other than a grinder, as described under question 36, state the cost of repairs and maintenance of each such machine, detailed from defendant's monthly, quarterly, annual, or other periodic reports compiled with respect to each such machine.

* * * * *

42. If defendant used a machine other than a grinder under question 36, state the power consumption per work hour of each such machine, detailed from defendant's actual cost records compiled with respect to such machine.

43. Point out and describe the operations, if any, performed on the cams of tractor cam shafts prior to work thereon by the machine referred to in question 36 and subsequent to the forging of such cams, and furnish a detailed statement of the costs of such operations, such costs to be compiled from defendant's actual cost records.

44. Point out and describe the operations, if any, performed on the cams of tractor cam shafts subsequent

to work thereon by the machine referred to in question 36, and furnish a detailed statement of the costs of such operations, such costs to be compiled from defendant's actual cost records.

45. If the method and means employed by defendant immediately prior to the use of said infringing machines for removing the excess metal from the rough forged cams of any cam shafts produced by defendant involved only a grinding or grinding operations, furnish a detailed statement of the actual costs per shaft of such grinding operations, specifying cost of grinding machines and equipment, power consumption, cost of repair and maintenance, cost of grinding wheels, cost of diamonds and other dressing or truing tools, production per hour per grinding machine, while in operation, and all other items entering into the total cost of such operations, on (1) the cams of automobile cam shafts and (2) the cams of tractor cam shafts, such costs to be compiled from defendant's actual cost records.

* * * * *

47. How close to finished size were the cams of (1) automobile cam shafts and (2) tractor cam shafts, reduced on the infringing machines, such data to be compiled from defendant's records.

* * * * *

49. How close to finished size were the cams of tractor cam shafts reduced on the machine, if any, under question 36 above, such data to be compiled from defendant's records.

50. How close to finished size were the cams of (1) automobile cam shafts and (2) tractor cam shafts, reduced by the grinding operation or operations which preceded heat treating or hardening prior to the adoption and use of the infringing machines, such data to be compiled from defendant's record.

* * * * *

53. With respect to cost data compiled from defendant's actual cost records, as stated in answer to any of prior questions, state:

(1) particular basis or method upon which such costs have been computed;

(2) the basic elements of cost, as included in any such costs so computed by defendant;

(3) upon what basis manufacturing burden, if defendant computes burden as an element of cost, is computed;

(4) whether a manufacturing profit is computed by defendant on each manufacturing or processing operation with respect to (a) automobile cam shafts and (b) tractor cam shafts;

(5) the basis upon which depreciation and/or obsolescence is reflected in such costs;

(6) how general manufacturing overhead is allocated to specific operations.

* * * * *

It is Further Ordered that convenient reference shall be made to defendant's books, records or other sources of information upon which the account or statement is based so that plaintiff may readily verify or disprove the account as rendered.

This order is directed to you, your officers, agents, clerks and employees, all in accordance with said amended interlocutory decree and the powers therein and thereby conferred upon me and in accordance with Rules 60, 62, 63 and 64 of the Rules of Practice for the Courts of Equity of the United States and the Statutes of the United States in such case made and provided.

(Sgd) Donald L. Quaife,
Special Master.

Dated:
Detroit, Michigan,
July 6, 1937.

EXHIBIT A—DEFENDANT'S STATEMENT OF ACCOUNT.

(Filed September 27, 1937.)

Responsive to the order of the Special Master entered in the above entitled cause on July 6, 1937, the defendant, Ford Motor Company, herewith submits its Statement of Account concerning the various matters set forth in said order.

Defendant has made careful and thorough search through its old files and records to obtain the fullest possible record evidence for compiling the various statements herein furnished and such search is being continued. If further records are found bearing more directly on the various statements herein set forth, defendant respectfully requests that leave be granted to it to amend or supplement the following statements.

Defendant answers the several paragraphs of said order as follows:

1. A total of twenty-four (24) infringing machines were used by the defendant from June 16, 1925, to date.

2. The date each such machine was acquired, the cost thereof, the manufacturer's serial number and the defendant's identifying number therefor are as follows:

Brass Tag No.	Cost	Serial No.	Date of Acquisition
32067	$4150.00	105	2- 9-24
35472	"	106	2-29-24
36592	4000.00	111	4-19-24
36496	"	109	4-12-24
36552	"	110	4-15-24
36928	"	113	4-29-24
37754	"	116	5-12-24
37844	"	118	5-17-24
38080	"	121	6- 5-24
38005	"	120	5-27-24
36451	"	108	4-11-24
37867	"	119	5-21-24
37732	"	117	5-14-24
36848	"	112	4-24-24
37657	"	115	5- 6-24

Brass Tag No.	Cost	Serial No.	Date of Acquisition
36386	$4000.00	107	4- 4-24
37501	"	114	5- 1-24
37001	"	122	5-29-24
57219	5950.00	214	1- 3-29
57220	"	215	1- 3-29
57578	"	229	4- 9-29
57903	"	226	3-29-29
57945	"	225	3-20-29
57960	"	227	3-29-29

All of the foregoing machines were Melling cam turning lathes and were purchased from Walcott Lathe Company, Jackson, Michigan.

The information above set forth is taken from defendant's permanent inventory of machine tools, the information with respect to each machine being contained on a separate inventory sheet, identified by the corresponding brass tag number.

* * * * *

15. No permanent records were ever made or kept by defendant showing day to day maintenance or repair costs on any machine tools in defendant's plant. During the entire use of the Walcott machines, set forth in paragraph 1 and listed in paragraph 2, four machine tool repairmen devoted practically their entire time on each shift to running maintenance and minor repairs on these machines. Several of the machines were overhauled and the cost of such overhauling is as listed below:

Brass Tag	Order	Date	Cost
32067	B-24802	7-10-24	$ 275.00
35472	R-26501	9- 9-29	1379.55
36592	E-66375	1- 4-29	1728.28
36552	R-34478	10-1929	1517.39
36928	R-26827	9- 9-29	1806.64
37754	R-34994	10-1929	1778.43
38005	R-40938	4-1930	2789.55
36451	E-58333	12- 5-28	1856.75
37867	R-54299	3-1930	1713.64
37732	R-19695	7- 2-29	1310.54

Brass Tag	Order	Date	Cost
36848	E-69225	5- 4-29	$1904.01
37657	E-48294	12- 3-28	1829.19
37501	(R-70888	6-1930	589.62
	(R-7818	4- 2-29	1914.85
36496	E-66495	1- 4-29	1461.02

For further information in respect to defendant's accounting practice, reference is made to paragraph 53 hereof.

16. No record has ever been kept on the power consumption of individual machines or of the machines as a group. It has never been a practice of the defendant to keep records of this character.

17. The cutting tools used in each of the Walcott machines were an ordinary small lathe bit. Records available show that the cost per tool was 25 cents. No records are available which show the number of such tools which were purchased or made by defendant during the period of use of the machines.

* * * * *

19. No records have ever been kept as to cutting tool maintenance cost or cutting tool repair costs for each of the machines or for the machines as a whole.

20. Under defendant's system of accounting a detailed cost of separate operations on all of the parts which enter into the construction of defendant's automobiles are not made a matter of permanent record. The system employed by defendant was to prepare, at convenient intervals, a cost summary of the entire group of operations required to complete any particular part of the car. The group of operations for the manufacture of a camshaft were performed in several different departments of defendant's plant, certain operations, for example, being in the forging department, and other operations in machining departments. Each of the various departments are given, according to defendant's system, a department number and at such intervals when cost summary sheets would be compiled, the entire material, labor and burden costs for any one month would be divided by the number of pieces produced in a particular department and unit costs obtained therefrom. Material

costs involve only the raw stock for fabricating the parts in question. The labor charge in defendant's cost summary includes only what is known as the productive labor, while the burden cost includes non-productive labor, tool replacement, overhead, depreciation and obsolescence of plant and machinery. As these unit costs in defendant's system are charged to an entire department, they do not correctly reflect the actual cost to defendant of any one of the very many operations for completing the finished camshaft. A typical cost summary sheet for the months of May and July 1929, showing the cost of producing the Model A camshaft A-6250, is attached hereto and marked Exhibit 6.

At intervals time studies were made in defendant's plant of the minute labor costs or time consumed in performing the entire sets of operations required for fabricating various parts from raw material to complete the finished product. Photostatic copy of such an operation sheet for fabricating the Model A-6250 camshaft is attached hereto and marked Exhibit 7. This operation sheet shows that 72 separate and distinct operations were performed on the Model A camshaft in the Machining Department No. 410. This sheet also shows the number of minutes for each separate operation, including operation 14, "Rough Turning of all cams," which is the operation performed by the infringing machine. As the cost summary cards charge burden to the entire set of 72 operations, as shown on Exhibit 7, this burden cost does not accurately reflect the actual cost of turning the cams of defendant's camshafts by the use of the infringing machine. Actual costs have been estimated by checking with foremen of the departments and by reference to other available records and such costs for the Model T, Fordson and Model A camshafts are set forth in Exhibit 8 attached hereto.

* * * * *

25. A step by step description of the method and means employed by the defendant, immediately prior to the adoption and use of the infringing machines, for reducing rough forged cams of automobile camshafts to finished size is set forth in the testimony of P. E. Martin and Albert M. Wibel taken in the trial of this cause and reference is made thereto, particularly to that part of such testimony found on pages 204 and 205 and 275 to 277 of the printed

record on appeal of the within cause and Exhibits 53, 53b, 61, 62 and 63 supporting such testimony.

26. The particular machines used for removing excess metal from the camshafts and its mode of operation are all set forth in the testimony and exhibits referred to in paragraph 25 hereof and reference is made thereto. The particular type of camshaft was the shaft T-410 for the Ford Model T automobile (see blueprint, Exhibit 1, referred to in paragraph 6).

27. The following is a list of the machines used by the defendant prior to the adoption of the infringing machines, showing the defendant's identification number for each such machine, the cost thereof, the name of the machine, the date of acquisition thereof and the date of last use thereof.

Brass Tag No.	Cost	Name of Machine	Date of Acquisition	Date of Last Use
7089	$ 4,450.00	18-Z-3 Cam Shaper	10-26-14	4-27-21
8886	3,293.00	"	10-28-15	5- 6-24
10706	4,518.50	"	8- 9-16	12-20-24
11628	4,510.50	"	10-20-16	6- 5-24
12205	4,533.50	"	12- 1-16	12-23-24
15300	4,465.00	"	10-13-17	6- 5-24
15303	4,469.00	"	10-16-17	6-12-24
15353	4,815.00	"	11- 5-17	6- 5-24
15435	4,811.00	"	11-22-17	6-12-24
15436	4,804.00	"	11-22-17	6-12-24
15437	4,854.00	"	11-23-17	4-12-24
19908	10,179.39	"	12- 3-19	4- 9-24
20077	10,179.39	"	12-30-19	4-15-24
28126	5,915.65	"	1- 2-23	6- 5-24
34312	6,178.75	"	1-19-24	12-20-24
34682	5,980.36	"	2- 4-24	4- 8-24
34717	5,956.85	"	2- 4-24	6- 5-24
35289	5,895.69	"	2-25-24	4- 8-24

The information above set forth is taken from the defendant's permanent inventory of machine tools which are permanent records of the defendant and are indexed according to the identifying brass tag number. According to the defendant's practice a permanent inventory card is made out for all machines at the time of acquisition of such machine and the cost as given in the permanent inventory reflects the actual cost of the machine at the time of its acquisition. Manufacturers' invoices relating to these machines have not been preserved. The date on which each machine was first used would be within a few days to a few weeks after the date of acquisition, the latter date only having been made a matter of written record.

An average production of 75 camshafts per operator was obtained on these machines, each operator running two machines. No permanent actual cost records were kept by defendant with respect to the cost of machining the cams of the Model T camshafts on the camshaft shapers, defendant's accounting practice in this respect being fully described in paragraph 20 hereof, to which reference is here made. The cost of machining the Model T camshafts, T-410, has been compiled from such records as are available, and is annexed hereto and marked Exhibit 9.

28. The cutting tools used in the machine described in paragraph 26 were shaper tools identified by the number 9-Z-32, and were designated "blades." Eight of such tools, or blades, were used in each machine. Search through available records resulted in the finding of two material price cards for the period beginning 10/14/21 and terminating 12/15/23, which show that the cost per unit of these tools purchased during such period ranged from $.603 to $1.372. Photostatic copies of these material price cards are attached hereto and marked Exhibit 10.

* * * * *

30. No record exists or was compiled to show the repair and maintenance costs of the machines described in paragraph 26. The permanent inventory of machine tools does not indicate that any of the machines were ever overhauled. Two machine tool repairmen were regularly assigned to the department in which these machines were located to take care of ordinary running repairs and maintenance. For further information as to defendant's accounting practice, reference is made to paragraphs 20 and 53 hereof.

31. No records have ever been kept as to cutting tool maintenance repair costs for each of the machines described in paragraph 26 or for the machines as a whole.

32. No record has ever been kept on the power consumption of the individual machines described in paragraph 26 or of the machines as a whole. It has never been a practice of the defendant to keep records of this character.

* * * * *

34. The sequence of operations on the cams of the Model T camshafts when the shapers as described in paragraph 26 were being used, was the same as the sequence of operations when the infringing machines were being used and comprised the operations as shown on the Operation Sheet, Exhibit 7, operation No. 43 "Semi finish grind all cams," operation 59 "Finish grind all cams to size," operation 61, "Remove burrs from all cams," operation 62, "Polish cams and line bearings," operation 66, "Brush all cams." No actual cost records were kept by defendant in which the cost of these various operations were segregated to each particular operation. The operations above listed, however, were performed by defendant over a long period of years, on all camshafts whether made on the infringing machine or non-infringing machine.

35. The method and means employed by defendant immediately prior to the adoption and use of the infringing machines for reducing to finished size the rough forged cams of tractor camshafts were—

1st. A roughing finish performed by:

(a) A Gordon lathe as disclosed in Plaintiff's Exhibit 2, patent No. 1,542,803, to Charles Gordon and Alfred W. Redlin, and

(b) A rough grinding operation in which the excess material was removed by means of a Landis 10 x 36 grinder.

2nd. Semi finish grinding.

3rd. Finish grinding.

36. The Gordon Lathe is shown and described in said Gordon and Redlin patent. Plaintiff's Exhibit 2, and its intended mode of operation is described therein. The particular type or character of shaft, or shafts, it was used on by defendant, was the shaft of the Fordson tractor, designated as Model F, and the shaft is shown in drawing F-446, blue print of which is furnished herewith in connection with answer No. 7, as Exhibit No. 3. The mode of operation of the Gordon machine in cutting the F-446 camshafts was that of mounting the shaft which had previously been centered between the centers 11 and 20 and clamping the end of the camshaft adjacent to the center 11 in the split collar

16 by means of a clamping bolt 17, as shown in Figs. 9 and 10 of the Gordon patent. The work being rotated in the lathe, the cutting tools 37, one for each of the eight cams to be turned, were oscillated upon an arc having a radius, the center of which coincided with the axis of the shaft 24, as shown in Figs. 6 and 7 of the Gordon patent, this movement of the tool serving to move the point of the tool to and from the axis of rotation of the camshaft being turned. As the camshafts were rotated the tools 37 were given a further oscillation about their cutting points as a center by the action of a cam 44 transmitted through a bell crank lever 52 through gear sector 54 to the gear tooth portion of a tool holder 34 in which the tool 37 was secured. The swinging of the point of the tool 37 through the arc above described was effected by the action of cam 43, all as shown in Figs. 6 and 7 of the Gordon patent.

The mode of operation of the Gordon machine was to oscillate the tool about its cutting point as a center for the purpose of maintaining the side cutting edge of the tool substantially normal to that portion of the work with which the point of the tool at any instant was in contact. Due to the swinging of the tool upon its point, it was necessary that the cam 44 be designed to swing the tool holder 34 through an angle of approximately 80° while the work was turning through an angular rotation of 6°. Because of the impossibility of effecting a movement of approximately 80° of the work holder 34 during but 6° of movement of the work shaft, it was impossible to control the movement of the cutting tool and to keep the roller 53 in contact with the cam 44 as the tool was passing around the nose of the camshaft, the roller dropping through space without touching the master cams while the tool was going around the high point or nose of the cam. Due to the principle of operation of the Gordon machine and the impossibility of controlling the tool movement, the tools undercut the side of the cam on the near side of the nose as the camshaft was rotated towards the tools and left a hump upon the far side of the nose of the cam. The rocking motion of the tool holder 34 was retarded by chips that got in between the rotating surface of the tool holder and tool holder base, which tended to in-

crease the difficulty in keeping the tools at the proper cutting angle. The springs 59 which governed the action of the levers 52 for rotating the tool holders 34 became weak and broke frequently and undue wear on the keys and keyways of the shafts that held the developed master cams 43 and 44 increased the difficulty of maintaining the tools at the proper cutting angles.

37. One Gordon camshaft turning lathe, cost $4,355.00. (See Defendant's Exhibit 54, Machinery Requisition No. 11569, Defendant's Exhibit 55, Permanent Inventory of Machine Tools, and Defendant's Exhibit 56, Ford Motor Company's Purchase Order No. 12620.) Date of acquisition of machine 5/16/23. Date of first use immediately after date of acquisition. The machine was sent to the Willard Machine Tool Company for repair and rebuilding 8/24/23 and was returned to the Ford Motor Company 12/23/23. It was then finally returned to the manufacturer permanently 7/30/24. (Defendant's Exhibit 55 and R. pp. 209 and 210.) Unit Production per hour while in operation approximately five. (R. p. 264.) No permanent cost records were kept by defendant with respect to the cost of producing camshafts on this machine. An estimated cost has been compiled and is attached hereto and marked Exhibit 11.

38. The number of tools employed in the Gordon lathe were eight for the F-446 model shaft. The type of tools are as shown in Figs. 6 and 7 of the Gordon patent (see part 37, see also Defendant's Physical Exhibit 58A. R. pp. 251 and 252). Two sets of eight additional cutters were made by defendant Ford Motor Company at an estimated cost of $3.25 or a total cost of $42.00. After further operation the tool holders were changed to a square tool bit by fastening a plate on the side of the slide at an estimated cost of $6.50 a piece or a total cost of $52.00. Cost of additional tool bits ¼ x ¼ x 1½ inches long 25 cents per tool or $2.00 per set. No written records of these costs were kept and the above costs are estimated.

39. The tools made, as stated in answer 38, were all for purpose of replacement.

40. The repairs and maintenance of the Gordon machine, as described in Question 36, involved the time of two

men sixteen hours a day, not including production and tool room foreman's supervision during the entire tryout period of approximately two hundred hours actual running. No detailed written records were kept in connection with this machine.

* * * * *

42. No record is kept under the Ford Motor Company system of power consumption of individual machines or machines as a group.

43. There was no operation prior to roughing the cams except that defendant rough ground the contour of approximately 120 camshafts to present an even amount of stock for Gordon lathe to help and improve its operation. Cost of such rough grinding (no records). Estimated by recollection, twelve per hour at $1.80 per hour or $.15 each. The amount of shafts scrapped due to poor machining on lathe, approximately 60 percent. (See R. pp. 264, 265.)

44. The operations performed on the cams of tractor camshafts subsequent to work thereon by the Gordon machine, were the same operations as detailed in the answers to Questions 24 and 34 hereof and as shown in Exhibit 7, except that due to the necessity to leave a greater amount of material on the cams for the semi-finish and finish grinding operations, the time required for the case hardening operation, No. 28, Operation Sheet, Exhibit 7, had to be increased to insure a deeper penetration of the case hardening and as more material had to be removed the time of the finish grinding operation was necessarily increased.

45. No written detailed cost records were kept by defendant as to the cost of rough grinding the F-446 Fordson tractor camshafts. The three Landis 10 x 36 grinders with Ford design cam grinding attachment were employed. Brass tag numbers—

40088.....	$2454.00
40093.....	2260.00
40094.....	1595.00

Cost of power consumption. No record kept. Cost of repair and maintenance. No record kept. Repair and

maintenance cost on these grinding wheels would be inconsequential. Cost of grinding wheels averaged $7.50 per wheel with an average life of 90 hours actual operation. No cost records per individual machine or departments for diamonds and other tracing and truing tools were kept or are available. Production per hour, per grinding machine while in operation. Estimated average production twelve shafts per hour. No other items would enter into total cost of operation except overhead as explained in answers to Questions 20 and 53. Rough grinding was used only on tractor camshafts and was never used by the defendant for finishing cams of automobile camshafts. Estimated cost of the grinding operation per shaft is attached hereto and marked Exhibit 12.

* * * * *

47. As shown by drawing T-410, Exhibit 1, the cams were reduced to within 50/1000 of finished size on the infringing machines for the Model T camshafts. Drawing A-6250, Exhibit 2, does not give the rough finished size of the cams, but merely the final finished dimensions. The same is true with respect to drawing F-446 for the tractor camshafts. No records other than the drawings are available. Defendant's practice, extending over the entire period of infringing and non-infringing manufacture of camshafts was to leave 50/1000 stock on all of its camshafts including the tractor and Model A shaft except during the period of use of the Gordon machines it was found necessary to leave 90/1000 stock on the shafts in order to produce a usable article.

* * * * *

49. No written records are available for amount of stock left on camshafts for the F-446 tractor camshaft machined on the Gordon lathe, but the amount of stock left on the shafts was .090 inches (R. p. 267.)

50. (1) No rough grinding operation was performed on the cams of automobile camshafts prior to the adoption and use of the infringing machines, and

(2) Tractor camshafts were reduced to within 50/1000 of finished size by the rough grinding.

* * * * *

53. (1 & 2) The particular basis or method upon which costs have been computed in answer to Questions 20,

27 and 37, and the basic elements of costs included, are explained in the tables, Exhibits 8, 9, 11 and 12.

(3) In accordance with defendant's usual accounting practice, as explained in answer to Question 20 hereof, defendant computes its manufacturing labor cost on the basis of the actual productive minutes or payroll minutes necessary to produce each particular part from rough material to finished product by taking the number of units produced in any one month in any particular department devoted to the manufacture of such part, taking the total amount of productive payroll labor. The total number of parts is divided into the actual productive minutes or payroll minutes devoted by the men on productive labor work in the particular department for the month in question. The actual minute cost is multiplied by the average departmental wage rate per hour during the period for which the record is kept, and this when reduced to a rate per minute, gives the productive labor cost per unit.

The unit material cost represents the purchase price of the rough part, plus a percentage which represents the cost of purchasing, receiving and handling up until the performing of the first operation, also the actual cost of ingredients (not including labor) when the part is produced entirely from raw materials in the plant.

Under defendant's accounting practice burden includes all manufacturing expenses other than productive labor, material, and purchase material handling expenses. Burden is charged to group numbers or departments as shown in the cost summary sheet, Exhibit 6. A group number may cover one or more departments and the burden is pro-rated over the productive parts manufactured in such department or departments, included in each particular group number and includes machine repair, maintenance, tool expense, depreciation, building repairs, building depreciation, sweeping and cleaning, supervision, etc.

(4) A manufacturing profit has never been computed by defendant on each manufacturing or processing operation with respect to either (a) automobile camshafts, or (b) tractor camshafts.

(5) The basis upon which defendant regularly reflects depreciation or obsolescence in computing its manu-

facturing costs is to charge off machinery equipment and durable tools on the basis of an assumed life of eight years thereto, depreciation therefore being charged at the rate of 12½ percent per year on the actual cost of such machinery, and a rate of 3⅓ percent is used by defendant to charge off depreciation and obsolescence on buildings on an assumed life of thirty years. The rate of 12½ percent per year for depreciation was, therefore, employed in the tables above referred to.

(6) General manufacturing overhead, including building repairs, building depreciation, sweeping and cleaning, is charged to the various departments on the basis of square footage. A general overhead for executive and administration expenses is charged to the various departments and non-productive labor of each particular department is charged directly to such department. The burden charged to each department is shown in the cost summary sheet, Exhibit 6, and is charged as a unit cost by dividing the number of units produced in each particular department into the lump sum figure properly assignable to such department for the month the costs are being computed. There is no allocation to specific operations, but merely a lump sum charge to each of the respective departments which cover all operations performed in the department.

* * * * *

FORD MOTOR COMPANY,

O.K.

By B. J. CRAIG, (Sgd.) I. J. F.
Secretary.

BODMAN, LONGLEY, BOGLE, MIDDLETON & FARLEY, (Sgd.)
Bodman, Longley, Bogle, Middleton & Farley,
1400 Buhl Building
Detroit, Michigan.

(Duly Verified by B. J. Craig.)

EXHIBIT 7 TO DEFENDANT'S STATEMENT OF ACCOUNT

FORD MOTOR COMPANY

OPERATION SHEET

Sheet No. 1

Part Name Camshaft Symbol No. A-6250-A1

Dept. No.	Oper. No.	Name of Operation	Minutes
153-154	A	Shear to 22" length	.2666
1514	B	Cold upset one end	.3311
	C	Heat and forge and hang on conveyor	1.4770
	D	Trim flash	.5143
	E	Normalize at 1500° F, cool slowly	.3429
	F	Tumble to remove scale	.3429
	G	Restrike	.1920
		Die Setter in Dept. 1514 & Stock Men	.8032
410	1	Remove from rough stock conveyor	.1777
	2	Mill both ends to rough length	.2182
	3	Center both ends	.2777
	4	Straighten	.1845
	5	Rough turn center bearing	.6154
	6	Cut recess at each bearing and face inside of flange	1.1429
	7	Turn O.D. of shaft between cams .875"	.8571
	8	Rough turn O.D. of flange and dia. for thread	.1882
	9	Drill one hole 3/16" deep in flange (Use "L" Drill)	.4070
	10	Rough turn front and rear bearing	.4733
	11	Undercut flange	.1920
	12	Indicate and straighten	.2857
	13	Gauge for length and spacing	.1777
	14	Rough turn all Cams	.7143

NOTE: Notify the Accounting Dept. Phone No. 4371 of any Change in Operations.

Revised 7/1/31
By MK:gz
Symbol No. A-6250-A1

FORD MOTOR COMPANY

OPERATION SHEET

Sheet No. 2

Part Name Camshaft Symbol No. A-6250-A1

Dept. No.	Oper. No.	Name of Operation	Minutes
410	15	Cut oil groove in front and rear bearing	.2043
	16	Spot face post with flange	.1781
	17	Re-center both ends	.1781
	18	Rough grind center bearing	.5393
	19	Rough grind front bearing	.3000
	20	Rough grind rear bearing	.3000
	21	Rough grind space for gear in center bearing	.2824
	22	Take off conveyor and gauge	.1777
	23	Indicate and straighten and hang on conveyor	.2526
	24	Cut eleven teeth	2.0869
	25	Burnish gear	.4800
	26	Check for quantity and remove burrs from oil grooves	.1777
	27	Roll gear for size by Dept. 410 (Green)	.1920
	28	Heat to 1470° and quench in caustic solution	.9600
	29	Polish for Rockwell Test	.1777
	30	Indicate from F.D. of gear and straighten	.3491
	31	Roll gear for size by Dept. 410 (Hard)	.1920
	32	Finish grind O D of gear	.3692
	33	Indicate O D of gear for size	.1777
	34	Semi-finish grind center bearing	.3795
	35	Semi-finish grind front bearing	.6159
	36	Semi-finish grind rear bearing	.3765

NOTE: Notify the Accounting Dept. Phone No. 4371 of any Change in Operations.

Revised 7/1/31
By MK :gz
Symbol No. A-6250-A1

FORD MOTOR COMPANY

OPERATION SHEET

Sheet No. 3

Part Name Camshaft Symbol No. A-6250-A1

Dept. No.	Oper. No.	Name of Operation	Minutes
410	37	Face front of flange and chamfer 48° angle	.5189
	38	Gauge bearings and flange for size (by Dept. 410)	.1777
	39	Drill two dowel pin holes through flange	.3095
	40	Indicate for trueness of dowel pin holes	.1777
	41	Undercut burr from dowel pin holes	.1777
	42	Chamfer dowel pin holes one side	.1777
	43	Semi-finish grind all cams	2.2857
	44	Brush teeth and count	.1777
	45	Indicate and straighten	.4800
	46	Indicate front and center bearing	.1777
	47	Re-center front end of shaft	.1777
	48	Re-indicate and straighten (Partial 10%)	.1920
	49	Finish grind center bearing 1.559/1.56" dia.	.4000
	50	Roll gear after grinding center bearing	.1920
	51	Finish grind front bearing 1.559/1.560" dia.	.4800
	52	Finish turn dia. for threads	.5714
	53	Re-indicate for trueness of dowel pin holes	.1777
2455	54	Copper plate spline end (on undersize only) Partial %	.0972
410	55	Finish grind rear bearing 1.559/1.560 dia.	.5714
	56	Gauge dia. for thread and indicate center bearings	.1777
	57	Gauge bearings for size and finish gauge front and rear bearings	.1777

NOTE: Notify the Accounting Dept. Phone No. 4371 of any Change in Operations.

Revised 7/1/31
By MK:gz
Symbol No. A-6250-A1

FORD MOTOR COMPANY

OPERATION SHEET

Sheet No. 4

Part Name Camshaft Symbol No. A-6250-A1

Dept. No.	Oper. No.	Name of Operation	Minutes
410	58	Ream dowel pin hole to .309/.3095	.1777
	59	Finish grind all cams to size	3.1579
	60	Indicate and straighten center bearing	.1777
	61	Remove burr from all cams	.3554
	62	Polish cams and line bearings	.6000
	63	Polish inside of flange	.2666
	64	Grind front of flange	.4800
	65	Cut 1"—16 U S F Threads	.3200
	66	Brush all cams	.1777
	67	Grind flange end of shaft to length and hang on conveyor	.3200
	68	Run through washer	.0000
	69	Repair (Partial)	.1777
	70	Lap gear to size on P D when necessary	.3554
	71	Plug gauge and ream dowel pin holes	.1920
	72	Hang on conveyor for Motor Line	.1777
		Machine Setters, Checkers and Supervision	2.0000
		Repairs on Oper. 33-40-53 (Partial)	.8200
			36.7593

(Continued)

NOTE: Notify the Accounting Dept. Phone No. 4371 of any Change in Operations.

Revised 7/1/31
By MK:gz
Symbol No. A-6250-A1

FORD MOTOR COMPANY

OPERATION SHEET

Sheet No. 5

Part Name Camshaft Symbol No. A-6250-A1

Dept. No.	Oper. No.	Name of Operation	Minutes
		TOTAL MINUTES BY DEPARTMENTS	
Department		153-154	.2666
"		1514	4.0034
"		410	32.3921
"		2455	.0972
		TOTAL MINUTES	36.7593

NOTE: Job retimed in Dept. 1514 from sheet dated 2/20/31

HR Steel Type "EEE" Select Forging Stock 1½" dia. x 242½ long = eleven forgings or 11.0609# required each 8.0313# each rough—5.5166# each finished.

NOTE: Notify the Accounting Dept. Phone No. 4371 of any Change in Operations.

Revised 7/1/31
By MK:gz
Symbol No. A-6250-A1

EXHIBIT 10 TO DEFENDANT'S STATEMENT OF ACCOUNT.

Z No. 9Z-32
Det. 1 #1.

FORD MOTOR COMPANY

MATERIAL PRICE CARD

Description Cutting Tools. Supersedes 28Z-98.

FACTORY AND PURCHASE ORDER COSTS

Date Entered	Order No.	Quan.	Dept.	Total Cost	Unit Cost
	H-40296	480	N-162	539.36	1.1237
10-14-21	H-53602	501	N-162	469.54	.9372
11-17-21	H-57955	335	N-162	362.73	1.083
2- 4-22	A-2441	561	N-162	469.41	.837
4-26-22	A-10779	286	N-162	192.12	.67
5-23-22	A-15006	518	N-162	356.21	.6877
8- 8-22	D-793	700			1.372
7- 1-22	D-73322	600			1.225
6-22-22	A-19282	461	N-162	417.53	.906
7-28-22	A-24320	326	N-162	317.46	.974
1053	Inventory Dec. 31, 1922	381			.974 ea

Z No. 9Z-32

Det. 1 #2

FORD MOTOR COMPANY

MATERIAL PRICE CARD

Description Blades.

FACTORY AND PURCHASE ORDER COSTS

Date Entered	Order No.	Quan.	Dept.	Total Cost	Unit Cost
3-26-23	D-20855	800			1.225
1-10-23	X-1729	545	N-162	328.65	.603
4- 4-23	D-21951	1000			1.225
6- 1-23	D-28069	550			1.18
7-19-23	D-34958	700			1.228
10-15-23	D-45325	1000			.78
12-15-20	D-53675	1200			.98
					.98
			1109		
Inventory Dec. 31, 1923			~~1100~~		.98
Inventory Dec. 31, 1924					.98 ea
Inventory Dec. 31, 1925					.98
Inventory Dec. 31, 1926					.98
Inventory Dec. 31, 1927					.98
Inventory Dec. 31, 1928					

EXHIBIT 11 TO DEFENDANT'S STATEMENT OF ACCOUNT.

COMPUTATION OF CERTAIN ITEMS OF COST OF GORDON LATHE OPERATION ON TRACTOR CAMSHAFTS.

(a) *Cost of material* ..... $.8734 per camshaft.

(b) *Cost of first twelve machining operations.*

The first twelve machine operations are estimated to have the following respective costs:

Oper.	Minutes per shaft	B. O. Material cost ea.	.80 per hr. .01333 per min. Labor Cost Ea.	June '25 157% Burden Cost Each	Total Cost Per Operation	Accu late Cos
1. Mill ends to rough length	.2182	.8734	.0029	.0046	.8809	.88
2. Center both ends	.2777		.0037	.0058	.0095	.89
3. Straighten	.1845		.0025	.0039	.0064	.89
4. Rough-turn center bearing	.6154		.0082	.0129	.0211	.91
5. Cut recess at each bearing and face inside of flange	1.1429		.0152	.0239	.0391	.95
6. Turn O. D. of shaft between cams	.8571		.0114	.0179	.0293	.98
7. Rough-turn O. D. of flange and dia. for thread	.1882		.0025	.0039	.0064	.99
8. Drill one hole 3/16" deep in flange	.4070		.0054	.0085	.0139	1.00
9. Rough-turn front & rear bearing	.4733		.0063	.0099	.0162	1.02
10. Undercut flange	.1920		.0026	.0041	.0067	1.02
11. Indicate and straighten	.2857		.0038	.0060	.0098	1.03
12. Gauge for length and spacing	.1777		.0024	.0038	.0062	1.04

Total estimated cost of first twelve operations including materials..$1.0455 per camshaft.

The foregoing estimate is arrived at by taking the minute cost of the same operations on Model A camshafts (see Exhibit 7) and by applying to such minute cost the average labor rate of $.80 per hour and a burden rate of 157%, such burden rate being the burden applicable to the entire department in 1925. No records exist or were made to show actual costs of specific operations.

(c) *Cost of turning cams on Gordon machine.*

1. Labor.

Rate of production ..... 5 shafts per hour.
Productive labor rate ..... $.80 per hour.
Labor cost per shaft:
$.80 ÷ 5 = $.16 per shaft.

2. Burden.
Standard burden:
$.16 x 157% = .2512.

Special tool repair cost:
Two tool repair men at $.90 per hour = $1.80.
Production ..... 5 pieces per hour.

Tool repair cost per shaft:
$1.80 ÷ 5 = $.36 per camshaft.

Total burden	.2512
	.3600
	$.6112

(d) *Cost of scrapping due to defective work on Gordon Machine operation.*

It appears that in using the Gordon machine 60% of all shafts placed in the machine were defectively machined and had to be scrapped. In other words, the usable output was only 40%. The increased cost due to this fact is arrived at as follows:

Cost of first twelve operations, including material	$1.0455
Cost of scrapping ..... $\frac{1.0455}{40\%}$ — 1.0455 =	$1.5683

(e) *Recapitulation of cost of turning cams.*

Direct labor	$ .1600
Burden	.6112
Losses due to scrapping....	1.5683
	$2.3395 per camshaft.

In the foregoing no provision has been made for machine depreciation except insofar as the same may be adequately represented by the standard burden rate. This burden rate (157%) was for the department as a whole. It is probably too low for this particular operation as expensive machinery was used.

EXHIBIT 12 TO DEFENDANT'S STATEMENT OF ACCOUNT.

COMPUTATION OF CERTAIN COSTS INVOLVED IN ROUGH GRINDING OPERATION ON TRACTOR CAMSHAFTS BY LANDIS 10x36 GRINDERS DURING PERIOD JULY 1, 1925 TO JANUARY 1, 1928.

In the following no provision has been made for any items other than those expressly described. In particular no provision has been made for any of the following: materials, scrap losses, transportation, and general overhead including buildings, heating, production supervision, power, administration, taxes and general expenses.

(a) Average yearly production during period 90,263 cams.
This figure is taken from paragraph 3 (a) of Exhibit 8.

(b) *Depreciation cost of grinding machines.*
Original cost of machines:

No. 40088	$2454.00
" 40093	2260.00
" 40094	1595.00
	$6309.00

Depreciation cost*
$6309.00 x 12½% = $788.63.

* See paragraph 53 and paragraph 1(b) of Exhibit 8.

(c) *Machine depreciation cost per camshaft.*
Machine depreciation per year (see (b) above) $788.63
Average yearly camshaft output ..... 90,263.
Machine depreciation cost per camshaft:
$788.63 ÷ 90,263 = .0087.

(d) *Direct labor cost per camshaft.*
Production per man ..... 8 shafts per hour
Productive labor rate ..... $.80 per hour.
Direct labor cost per camshaft:
$.80 ÷ 8 = $.10 per camshaft.

(e) *Grinding wheel cost per camshaft.*
Cost of grinding wheel .....$7.50 each.
Life of grinding wheel (estimate) .....65 hours.

(f) Camshaft output in 65 hours:

65 x 8 = 520.

Grinding wheel cost per camshaft:

$7.50 ÷ 520 = .0144

(g) *Recapitulation of costs per camshaft.*

Machine depreciation	.0087
Direct labor	.10
Grinding wheels	.0144
	$.1231

EXHIBIT B—AMENDMENT TO DEFENDANT'S STATEMENT OF ACCOUNT.

(Verified December 31, 1937)

As was stated in the original Statement of Account filed herein on September 27, 1937, search was at that time being continued through the old files and records of the defendant Ford Motor Company to obtain the fullest possible record evidence for compiling the various statements of account at that time furnished, and leave was asked to amend or supplement the statement of account if further records were found bearing more directly upon the various statements. Defendant has, since the filing of the first Statement of Account herein, employed the services of a competent firm of certified public accountants, and as a result, further records have been discovered and it is now desired to amend the original Statement of Account above referred to in the following respects:

Substitute for paragraph *2* the following:

2. The date each such machine was acquired, the cost thereof, the manufacturer's serial number and the defendant's identifying number therefor are as follows:

Brass Tag No.	Cost	Serial No.	Date of Acquisition
32067	$4121.57	105	2- 9-24
35472	4347.71	106	2-29-24
36592	4081.65	111	4-19-24
36496	4106.42	109	4-12-24
36552	4093.83	110	4-15-24
36928	4010.40	113	4-29-24
37754	4109.98	116	5-12-24
37844	4014.03	118	5-17-24
38080	4014.03	121	6- 5-24
38005	4014.03	120	5-27-24
36451	4170.38	108	4-11-24
37867	4014.03	119	5-21-24
37732	4184.39	117	5-14-24
36848	3944.18	112	4-24-24
37657	4083.23	115	5- 6-24
36386	4093.49	107	4- 4-24
37501	4069.29	114	5- 1-24
37001	3973.19	122	5-29-24
57219	5892.34	214	1- 3-29
57220	5892.35	215	1- 3-29
57578	5875.52	229	4- 9-29
57903	5883.62	226	3-29-29
57945	5874.48	225	3-20-29
57960	5881.46	227	3-29-29

All of the foregoing machines were Melling cam turning lathes and were purchased from Walcott Lathe Company, Jackson, Michigan.

The information above set forth is taken from defendant's Permanent Record of Machine Tools and Machinery Valuation Record, the information with respect to each machine being contained on a separate record sheet, identified by the corresponding brass tag number.

* * * * *

Substitute for paragraph *27* the following:

27. The following is a list of the machines used by the defendant prior to the adoption of the infringing machines, showing the defendant's identification number for each such machine, the cost thereof, the name of the machine,

the date of acquisition thereof and the date of last use thereof.

Brass Tag No.	Cost	Name of Machine	Date of Acquisition	Date of Last Use
7089	$ 4,450.00	18-Z-3 Cam Shaper	10-26-14	4-27-21
8886	3,246.00	"	10-28-15	5- 6-24
10706	4,503.35	"	8- 9-16	12-20-24
11628	4,463.50	"	10-20-16	6- 5-24
12205	4,473.50	"	12- 1-16	12-23-24
15300	4,424.39	"	10-13-17	6- 5-24
15303	4,413.00	"	10-16-17	6-12-24
15353	4,755.00	"	11- 5-17	6- 5-24
15435	4,766.39	"	11-22-17	6-12-24
15436	4,775.56	"	11-22-17	6-12-24
15437	4,842.99	"	11-23-17	4-12-24
19908	10,179.39	"	12- 3-19	4- 9-24
20077	10,179.39	"	12-30-19	4-15-24
28126	5,915.65	"	1- 2-23	6- 5-24
34312	6,178.75	"	1-19-24	12-20-24
34682	5,980.36	"	2- 4-24	4- 8-24
34717	5,956.85	"	2- 4-24	6- 5-24
35289	5,895.69	"	2-25-24	4- 8-24

The information above set forth is taken from the defendant's Permanent Record of Machine Tools and Machinery Valuation Record, which are permanent records of the defendant and are indexed according to the identifying brass tag number. According to the defendant's practice a permanent record card is made out for all machines at the time of acquisition of such machine and the cost as given in the permanent inventory reflects the actual cost of the machine at the time of its acquisition. Manufacturers' invoices relating to these machines have not been preserved. The date on which each machine was first used would be within a few days to a few weeks after the date of acquisition, the latter date only having been made a matter of written record.

An average production of 50 camshafts per operator was obtained on these machines, each operator running two machines. No permanent actual cost records were kept by defendant with respect to the cost of machining the cams of the Model T camshaft on the camshaft shapers, defendant's accounting practice in this respect being fully described in paragraph 20 hereof, to which reference is here made. The cost of machining the Model T camshafts, T-410, has been compiled from such records as are available and is annexed hereto and marked Exhibit 9.

* * * * *

Substitute for paragraph *30* the following:

30. No record exists or was compiled to show the repair and maintenance costs of the machines described in paragraph 26. The Permanent Record of Machine Tools indicates that only three of the machines were ever overhauled. No costs of these overhauls are available. Two machine tool repairmen were regularly assigned to the department in which these machines were located to take care of ordinary running repairs and maintenance. For further information as to defendant's accounting practice, reference is made to paragraphs 20 and 53 hereof.

* * * * *

Substitute for paragraph *34* the following:

34. The sequence of operations on the cams of the Model T camshafts when the shapers as described in paragraph 26 were being used, was the same as the sequence of operations when the infringing machines were being used except that the straightening operation which was required prior to the turning operation on the infringing machines was not required prior to the shaping operation on the shapers. The operations performed on the cams subsequent to the rough machining operation were as shown on the operation sheet, Exhibit No. 13, attached to Defendant's Further Statement of Account and comprised operation No. 14, "Polish Cam," operation No. 34, "Grind Cams," operation No. 37 "Remove burr from cam," operation No. 43, "Polish minor cams." No actual cost records were kept by defendant in which the cost of these various operations were segregated to each particular operation. The operations above listed, however, were performed by defendant over a long period of years, on all camshafts whether made on the infringing machine or non-infringing machine.

* * * * *

Substitute for paragraphs *44* and *45* the following:

44. The operations performed on the cams of tractor camshafts subsequent to work thereon by the Gordon machine, were substantially the same operations as shown on operation sheet, Exhibit No. 17 except that due to the necessity to leave a greater amount of material on the cams for operation No. 23, "Finish Grind Cams," the time

required for operation No. 15 "Harden," had to be increased to insure a deeper penetration of the case hardening and as more material had to be removed the time of the finish grind cams operation was necessarily increased.

45. No written detailed cost records were kept by defendant as to the cost of rough grinding the F-446 Fordson tractor camshafts. The three Landis 10 x 36 grinders with Ford design cam grinding attachment were employed. Brass tag numbers—

40088	$2593.85
40093	2399.85
40094	1636.20

Cost of power consumption. No record kept. Cost of repair and maintenance. No record kept. Repair and maintenance cost on these grinding wheels would be inconsequential. Cost of grinding wheels averaged $7.50 per wheel with an average life of 55 hours actual operation. No cost records per individual machine or departments for diamonds and other tracing and truing tools were kept or are available. Production per hour, per grinding machine while in operation. Estimated average production eight shafts per hour. No other items would enter into total cost of operation except overhead as explained in answers to Questions 20 and 53. Rough grinding was used only on tractor camshafts and was never used by the defendant for finishing cams of automobile camshafts. Estimated cost of the grinding operation per shaft is attached hereto and marked Exhibit 12.

* * * * *

Substitute for paragraph *53(6)* the following:

53 (6) General manufacturing overhead, including building repairs, building depreciation, sweeping and cleaning, is charged to the various departments on the basis of square footage. A general overhead for executive and administration expenses is charged to the various departments by being prorated on a productive labor basis, and non-productive labor of each particular department is charged directly to such department. The burden charged to each department is shown in the cost summary sheet, Exhibit 6, and is charged as a unit cost by dividing the

total departmental productive labor in each particular department into the lump burden figure properly assignable to such department and applied to the unit labor cost on a percentage basis for the month the costs are being computed. There is no allocation to specific operations, but merely a lump sum charge to each of the respective departments which cover all operations performed in the department.

FORD MOTOR COMPANY,
By B. J. CRAIG (signed)
Secretary.

(Ptf. Rec. Vol. III beginning line 18, page 29 of Typewritten Transcript.)

(29) Mr. Spohn: Now, if your Honor please, as Mr. Watts has pointed out, the statements of account filed by the defendant in this case under the rule are pleadings. There are three statements of account and they have been designated for purposes of identification for cross examination as Exhibits A, B and C: Exhibit A being the first statement of account, and B being an amended statement of account, and Exhibit C being defendant's further statement of account.

These statements of account, as I say, are pleadings. Plaintiff admits some of the facts therein stated and denies others, and of course as to those denied puts defendant to its **(30)** proof, and it is my purpose now to advise the Court and counsel for the defendant what portions of these three accounts are admitted by the plaintiff and what portions of these accounts are denied, and when I say "admitted" may that be understood as accepted by the plaintiff, and when I say "denied" may it be understood as meaning rejected by the plaintiff, and I am going to go through this slowly. There are 53 questions involved in the first account, the answers to which in some instances were amended, in the amended account.

Question No. 1 is admitted. The answer is admitted.

Question No. 2, the answer as amended is admitted.

* * * * *

Question No. 15, plaintiff admits the first sentence of the answer and denies the balance of the answer to that question.

Question No. 16, plaintiff admits the answer.

Question No. 17, plaintiff admits the answer.

* * * * *

Question No. 19, plaintiff admits the answer.

Question No. 20, plaintiff admits the first paragraph of the answer and rejects all the material in the second paragraph of the answer, that material following the words, "is attached hereto and marked Exhibit 6."

* * * * *

Question No. 25, plaintiff admits the answer.

Question No. 26, plaintiff admits the answer.

Question No. 27, plaintiff admits the amended answer, excepting only that portion thereof reading as follows, which portion of the answer plaintiff denies: "No permanent actual cost records were kept by defendant with respect to the cost of machining the cams of the model T cam shaft on the cam shaft shapers, defendant's accounting practice in this respect being fully described in paragraph 20 hereof to which reference is here made. The cost of machining the model T cam shafts, T-410, has been compiled from such records as are available and is annexed hereto and marked Exhibit 9."

Question No. 28, plaintiff admits the answer.

* * * * *

Question No. 30, plaintiff denies both the original answer and the amendment to the answer.

Question No. 31, plaintiff admits the answer.

Question No. 32, plaintiff admits the answer.

* * * * *

Question No. 34, plaintiff admits defendant's original answer to question 34 and denies the amended answer.

Question No. 35, plaintiff admits the answer excepting the following portion of the answer which plaintiff denies: "(a) A Gordon lathe as disclosed in Plaintiff's Exhibit 2, Patent No. 1,542,803 to Charles Gordon and Alfred W. Redlin."

Question No. 36, plaintiff denies the answer.

(33) Questions 37, 38, 39, 40, 42, 43, plaintiff denies defendant's answer.

Question No. 44, plaintiff denies the defendant's answer in its original statement of account and also as amended.

Question No. 45, plaintiff admits defendant's amended answer, excepting only computation of costs and elements of costs as designated by defendant on Exhibit 12 therein referred to.

* * * * *

Question No. 47, plaintiff accepts defendant's answer.

* * * * *

Question No. 49, plaintiff denies the answer.

Question No. 50, plaintiff admits the answer.

* * * * *

Question 53, plaintiff accepts the answer and admits the same, but denies the basis and methods therein set forth.

* * * * *

MASTER'S ORDER FOR STATEMENT OF ACCOUNT.

(Dated October 29, 1937.)

Before Donald L. Quaife, Esq., Special Master:

On motion of plaintiff and it appearing necessary and advisable that defendant's statement of account heretofore filed herein be supplemented in the hereinafter mentioned respects,

IT IS ORDERED that defendant file with me on or before the 1st day of December, 1937, at my office, Room 729 in the Federal Building, Detroit, Michigan, an account and statement in writing, under oath, together with proof of service of two copies thereof on plaintiff's solicitors, which said account and statement shall include and set forth the following:

1. State and report by monthly, quarterly or annual accounting periods in debtor-creditor form, a full and complete account of all profits, gains, savings and advantages which the defendant has derived, received, earned, made or saved, since June 16, 1925, by reason of or through its infringement of the Letters Patent in suit No. 1,542,803.

2. State whether or not defendant relies on any standard of comparison in determining any of its profits, gains, savings and advantages by reason of said infringement in respect to (a) its Model T cam shafts, (b) its Model A cam shafts, or (c) its tractor cam shafts.

3. State whether or not defendant employed any standard or standards of comparison in the account filed in response to Section 1 hereof.

4. If defendant relies on any standard or standards of comparison, or uses any standard or standards of comparison in the account filed in response to Section 1, identify and describe fully each such standard of comparison and the method and/or apparatus on which it is based, and furnish drawings of such apparatus and state where, when, by whom, and for what purpose such method and/or apparatus was used, and state where plaintiff may inspect such method and/or apparatus or any exemplification thereof on which defendant relies.

5. If defendant has used any standard or standards of comparison in its statement of account filed in response to Section 1 hereof, state fully the means and method by

which defendant arrived at all costs set forth with respect thereto and all bases for computing such costs, and if any records of actual costs of actual operation of such standard or standards were used by defendant, furnish summary cost schedules thereof.

* * * * *

8. State what disposition defendant has made of each of its infringing machines. If any of said machines were disposed of by transfer, sale or otherwise, state the date of such disposition and the amount of money or other consideration received therefrom, and identify the person or persons, company or companies who acquired such machines.

9. If defendant has had any infringing machine rebuilt or converted, state as to each such machine how and in what manner such machine was rebuilt or converted, what use has been made of it since it was rebuilt or converted, and what value was assigned thereto on defendant's records upon completion of such rebuilding or conversion.

10. Within the period Jan. 1, 1923, to Jan. 1, 1924, how many tractor cam shafts did defendant rough grind, how many grinding wheels did defendant consume in such grinding and what was the cost of such wheels.

IT IS FURTHER ORDERED that convenient reference shall be made to defendant's books, records or other sources of information upon which the account or statement is based so that plaintiff may readily verify or disprove the account as rendered.

This order is directed to you, your officers, agents, clerks and employees, all in accordance with said amended interlocutory decree and the powers therein and thereby conferred upon me and in accordance with Rules 60, 62, 63 and 64 of the Rules of Practice for the Courts of Equity of the United States and the Statutes of the United States in such case made and provided.

AND IT IS FURTHER ORDERED that plaintiff have leave to reserve its objections and exceptions, if any, to defendant's statement of account heretofore filed.

DONALD L. QUAIFE,
Special Master.

Dated:
Detroit, Michigan,
October 29, 1937.

EXHIBIT C—DEFENDANT'S FURTHER STATEMENT OF ACCOUNT.

(Dated December 31, 1937.)

Before Donald L. Quaife, Esq., Special Master:

Responsive to the order of the Special Master entered in the above entitled cause on October 29, 1937, the defendant, FORD MOTOR COMPANY, herewith submits its further statement of account concerning the various matters set forth in said order.

1. While paragraph 1 of said order orders that an account be stated by monthly, quarterly or annual periods in debtor-creditor form, we have prepared this account to cover the entire period of operation of the infringing machines because we feel that the use of the entire period reflects more accurately the comparative costs of production from which profits, savings and advantages may be computed and is less complicated than if an attempt were made to segregate or separate the entire period of operation by monthly, quarterly or annual periods of time.

(1)*

PRINTER'S NOTE:

In this *Exhibit C—Defendant's Further Statement of Account*, the ENDS of the pages enumerated by the Designation have been indicated by boldface figures in parentheses.

FORD MOTOR COMPANY

COMPARATIVE COSTS OF CERTAIN OPERATIONS IN MACHINING MODEL T-410 CAMSHAFTS

on Ford Cam Shapers and on Melling Cam Lathes
for the period from June 16, 1925 to January 15, 1929

	Debits	Credits
	Costs on Ford Cam Shapers	Costs on Melling Cam Lathes
Costs compared (a):		
Direct labor	$169,117.52	$176,848.62
Depreciation	19,248.69	16,921.58
Maintenance repairs	8,252.10	14,853.80
Extraordinary repairs	— (b)	23,579.66 (c)
	$196,618.31	$232,203.66
*Loss** due to use of Melling cam lathes	—	*35,585.35*
	$196,618.31	$196,618.31
Cost per camshaft	$.0575	$.0679

(a) No cost records are available to show, by separate operations, the comparative power costs, tools costs, scrap losses or other incidental items.

(b) The records for the Ford cam shapers, for the period in which these machines were used, indicate only 3 instances of extraordinary repairs for overhauling; the amounts expended are not available.

(c) Expenditures were made in 1928, 1929 and 1930 on 14 Melling cam lathes; the necessity for overhauling resulted principally from the use of the machines on Model T-410 production.

Schedule I
Sheet 1

* Words and figures in italics were red in the original.

FORD MOTOR COMPANY

COMPARATIVE COSTS OF DIRECT LABOR FOR THREE OPERATIONS ON MODEL T-410 CAMSHAFTS ON FORD CAM SHAPERS AND ON MELLING CAM LATHES

for the period from June 16, 1925 to January 15, 1929

Periods	Production of Model T-410 Camshafts	FORD CAM SHAPERS			MELLING CAM LATHES		
		Hours Required for Three Operations (Production multiplied by 3.50 minutes or by .05833333 hours)	Average Direct Labor Rates	Direct Labor Cost of Three Operations	Hours Required for Three Operations (Production multiplied by 3.66 minutes or by .061 hours)	Average Direct Labor Rates	Direct Labor Cost of Three Operations
June 16-30, 1925	100,575	5,866.87	$.8171	$ 4,793.82	6,135.08	$.8171	$ 5,012.97
July	172,650	10,071.25	.8318	8,377.27	10,531.65	.8318	8,760.23
August	92,700	5,407.50	.8245	4,458.48	5,654.70	.8245	4,662.30
September	119,500	6,970.83	.8143	5,676.35	7,289.50	.8143	5,935.84
October	222,950	13,005.42	.8008	10,414.74	13,599.95	.8008	10,890.84
November	212,950	12,422.08	.8046	9,994.81	12,989.95	.8046	10,451.71
December	171,880	10,026.33	.8191	8,212.57	10,484.68	.8191	8,588.00
January, 1926	157,400	9,181.67	.8204	7,532.64	9,601.40	.8204	7,876.99
February	154,000	8,983.33	.8213	7,378.01	9,394.00	.8213	7,715.29
March	178,200	10,395.00	.8305	8,633.05	10,870.20	.8305	9,027.70
April	170,375	9,938.54	.8358	8,306.63	10,392.88	.8358	8,686.37
May	155,139	9,049.77	.8317	7,526.69	9,463.48	.8317	7,870.78
June	149,069	8,695.69	.8462	7,358.29	9,093.21	.8462	7,694.67
July	141,877	8,276.16	.8498	7,033.08	8,654.50	.8498	7,354.59
August	151,676	8,847.77	.8507	7,526.80	9,252.24	.8507	7,870.88
September	141,814	8,272.48	.8594	7,109.37	8,650.65	.8594	7,434.37
October	145,830	8,506.75	.8724	7,421.29	8,895.63	.8724	7,760.55
November	110,418	6,441.05	.8924	5,747.99	6,735.50	.8924	6,010.76
December	43,407	2,532.07	.9038	2,288.48	2,647.83	.9038	2,393.11
January, 1927	83,909	4,894.69	.9178	4,492.35	5,118.45	.9178	4,697.71
February	68,810	4,013.92	.9263	3,718.09	4,197.41	.9263	3,888.06
March	93,781	5,470.56	.9366	5,123.73	5,720.64	.9366	5,357.95
April	80,555	4,699.04	.9483	4,456.10	4,913.86	.9483	4,659.81
May	83,520	4,872.00	.9529	4,642.53	5,094.72	.9529	4,854.76
June	13,109	764.69	.9160	700.46	799.65	.9160	732.48
July	12,711	741.47	.9137	677.48	775.37	.9137	708.46
August	14,837	865.49	.9114	788.81	905.06	.9114	824.87
September	18,703	1,091.01	.9067	989.22	1,140.88	.9067	1,034.44
October	16,625	969.79	.9020	874.75	1,014.13	.9020	914.75
November	12,285	716.62	.9001	645.03	749.39	.9001	674.53
December	7,241	422.39	.8979	379.26	441.70	.8979	396.60
January, 1928	9,191	536.14	.8920	478.24	560.65	.8920	500.10
February	7,844	457.57	.8120	371.55	478.48	.8120	388.53
March	8,041	469.06	.8342	391.29	490.50	.8342	409.18
April	8,435	492.04	.8385	412.58	514.54	.8385	431.44
May	12,508	729.63	.7683	560.57	762.98	.7683	586.20
June	14,878	867.88	.8034	697.25	907.55	.8034	729.13
July	13,712	799.87	.8098	647.73	836.43	.8098	677.34
August	13,491	786.97	.8230	647.68	822.95	.8230	677.29
September	11,760	686.00	.8113	556.55	717.36	.8113	581.99
October	9,445	550.96	.8321	458.45	576.15	.8321	479.41
November	5,444	317.58	.8520	270.58	332.08	.8520	282.93
December	5,699	332.45	.8611	286.27	347.63	.8611	299.34
January 1-15, 1929	1,222	71.29	.8502	60.61	74.54	.8502	63.37
	3,420,166	199,509.67		$169,117.52	208,630.13		$176,848.62

Schedule I
Sheet 2

FORD MOTOR COMPANY
DEPRECIATION COSTS OF FORD CAM SHAPERS; MODEL T-410 CAMSHAFTS

Thirteen machines at various costs and acquisition dates for the period from June 16, 1925 to January 15, 1929

Periods	Depreciation Rates	Depreciation	Per Cent Applicable to T-410	Amounts
June 16, 1925 to December 31, 1925 (6½ months)	9.5%	$3,650.36	100.	$ 3,650.36
Year 1926	9.5%	6,915.33	100.	6,915.33
Ten months ended October 31, 1927	10.5%	6,691.60	100.	6,691.60
November, 1927	10.5%	669.16	82.79	554.00
December, 1927	10.5%	669.16	51.81	346.69
Year 1928	10.5%	8,676.16	12.50	1,084.52
January 1-15, 1929	10.5%	373.08	1.66	6.19
Total				$19,248.69

Schedule I
Sheet 3

(4)

FORD MOTOR COMPANY
DEPRECIATION COSTS OF MELLING CAM LATHES; MODEL T-410 CAMSHAFTS

Sixteen Melling Cam Lathes, cost $65,351.07 for the period from June 16, 1925 to January 15, 1929

Periods	Depreciation Rates	Depreciation	Per Cent Applicable to T-410	Amounts
June 16, 1925 to December 31, 1925 (6½ months)	9.5%	$3,362.86	100.	$ 3,362.86
Year 1926	9.5%	6,208.35	100.	6,208.35
Ten months ended October 31, 1927	10.5%	5,718.22	100.	5,718.22
November, 1927	10.5%	571.82	82.79	473.41
December, 1927	10.5%	571.82	51.81	296.26
Year 1928	10.5%	6,861.86	12.50	857.73
January 1-15, 1929	10.5%	285.91	1.66	4.75
Totals				$16,921.58

Schedule I
Sheet 4

(5)

FORD MOTOR COMPANY

COMPARATIVE COSTS OF MAINTENANCE REPAIRS ON FORD CAM SHAPERS AND ON MELLING CAM LATHES

for the period from June 16, 1925 to May 31, 1927.

Shift Numbers	Number of Hours Worked	Number of Men in Maintenance Crew	Average Direct Labor Rates	Amounts
	Ford Cam Shapers			
1	1922	1	.8587	$ 1,650.42
2	1922	2	.8587	3,300.84
3	1922	2	.8587	3,300.84
	5766			$ 8,252.10
	Melling Cam Lathes			
1	1922	1	.8587	$ 1,650.42
2	1922	4	.8587	6,601.69
3	1922	4	.8587	6,601.69
	5766			$14,853.80

Schedule I
Sheet 5

FORD MOTOR COMPANY

COST OF EXTRAORDINARY REPAIRS ON MELLING CAM LATHES

Expenditures made in years 1928, 1929 and 1930

Work Order Numbers	Brass Tag Numbers	Dates of Work Orders	COSTS Material	Labor	Total	Explanations per Work Orders
R-26501	35472	Sep 9, 1929	$ 72.77	$ 1,306.78	$ 1,379.55	Move from K-7 Motor Building to B-58 Foundry. Overhaul for Operation No. 13; turn cams on A-6250 camshaft. 27 bronze bushings and 3 cast iron castings.
E-66375	36592	Jan 4, 1929	47.68	1,680.60	1,728.28	Move from K-7 to N-711-C Foundry Tool Room. Overhaul; to be repaired for A-6250. Make 20 bronze bushings and heat treat 2 AAA shafts.
E-34478	36552	Oct 1929	38.36	1,479.03	1,517.39	Move from K-7 Motor Building to B-58 Foundry. Overhaul for Operation No. 13; turn cams on A-6250 camshaft. Make 2 bronze bushings and 2 forgings.
R-26827	36928	Sep 9, 1929	62.53	1,744.11	1,806.64	Move from K-8 Motor Building to B-58 Foundry. Overhaul for Operation No. 13; turn cams on A-6250 camshaft; 6 bronze brackets. Make 27 bronze bushings.
R-34994	37754	Oct 1929	84.01	1,694.42	1,778.43	Move from K-7 to B-55. Make all necessary repairs. Make 43 bronze bushings; furnish one 8" x 6½" cast iron casting.
R-40938	38005	Apr 1930	59.00	2,730.75	2,789.75	Move from K-7 to B-58 Foundry. Overhaul for Operation No. 13; turn cams on A-6250 camshaft. Make 21 bronze bushings. Rework one gear to fit spindle.
R-58333	36451	Dec 5, 1928	58.71	1,798.04	1,856.75	Move to B-60 Foundry. Do all necessary repairs to put machine in first class shape. Make 21 bronze bushings. Heat treat 1 AAA shaft. Furnish 1 steel casting.
R-54299	37867	Mar 1930	65.59	1,648.05	1,713.64	Move from K-7 to B-58 Foundry. Overhaul for Operation No. 13. Turn cams on A-6250 camshaft. Make 21 bronze bushings.
R-19695	37732	Jul 2, 1929	57.35	1,253.19	1,310.54	Move from K-8 to B-60 Foundry. Overhaul for Operation No. 13. Turn cams on A-6250 camshaft. Make 20 bronze bushings. Furnish 2 iron castings.
E-69225	36848	May 4, 1929	83.15	1,820.86	1,904.01	Move from K-8 to Foundry Tool Room. Overhaul for shaping cams on A-6250. Make 21 bronze bushings. Furnish 3 castings. Heat treat 1 shaft.
E-48294	37657	Dec 3, 1928	85.79	1,743.40	1,829.19	Move from J-8 to Foundry Tool Room. Overhaul for shaping cams on A-6250. Make 19 bronze bushings. Make 4 cast iron castings.
R-70888	37501	Jun 1930	27.49	562.13	589.62	Overhaul. Move from B-63 Foundry to K-7 Motor Building. Make 15 bronze bushings.
R-7818	37501	Apr 2, 1929	83.98	1,830.87	1,914.85	Move from K-8 to B-59 Foundry. Overhaul and put in first class shape. Make 20 bronze bushings. Furnish 3 steel forgings.
E-66495	36496	Jan 4, 1929	55.12	1,405.90	1,461.02	Move from K-7 to Foundry Tool Room. Make all necessary repairs. Make 29 bronze bushings.
	Total		$881.53	$22,698.13	$23,579.66	

Schedule I
Sheet 6

FORD MOTOR COMPANY

COMPARATIVE COSTS OF CERTAIN OPERATIONS IN MACHINING MODEL A-6250 CAMSHAFTS

on Ford Cam Shapers and on Melling Cam Lathes
for the period from November 1, 1927 to February 3, 1931

	Debits	Credits
	Costs on Ford Cam Shapers	Costs on Melling Cam Lathes
Costs compared (a):		
Direct labor	$ 86,921.15	$101,108.05
Depreciation	31,728.94	27,645.49
Maintenance repairs	25,234.66	45,829.12
	$143,884.75	$174,582.66
*Loss** due to use of Melling cam lathes	—	*30,697.91*
	$143,884.75	$143,884.75
Cost per camshaft	$.0341	$.0413

(a) No cost records are available to show, by separate operations, the comparative power costs, tool costs, scrap losses or other incidental items.

* Words and figures in italics were red in the original.

Revised Schedule II
Sheet 1

FORD MOTOR COMPANY

COMPARATIVE COST OF DIRECT LABOR FOR TWO OPERATIONS ON MODEL A-6250 CAMSHAFTS ON FORD CAM SHAPERS AND MELLING CAM LATHES

for the period from November 1, 1927 to February 3, 1931

Periods	Production of Model A Camshafts	FORD CAM SHAPERS			MELLING CAM LATHES		
		Hours Required for Two Operations (Production multiplied by 1.3755 minutes or by .022925 hours)	Average Direct Labor Rates	Direct Labor Cost of Two Operations	Hours Required for Two Operations (Production multiplied by 1.60 minutes or by .0266667 hours)	Average Direct Labor Rates	Direct Labor Cost of Two Operations
November, 1927	2,553	58.53	$.9001	$ 52.68	68.08	$.9001	$ 61.28
December	6,734	154.38	.8979	138.62	179.57	.8979	161.24
January, 1928	13,509	309.69	.8920	276.24	360.24	.8920	321.34
February	19,512	447.31	.8120	363.22	520.32	.8120	422.50
March	32,295	740.36	.8342	617.61	861.20	.8342	718.41
April	44,503	1,020.23	.8385	855.46	1,186.75	.8385	995.09
May	55,306	1,267.89	.7683	974.12	1,474.83	.7683	1,133.11
June	67,866	1,555.83	.8034	1,249.95	1,809.76	.8034	1,453.96
July	69,537	1,594.14	.8098	1,290.93	1,854.32	.8098	1,501.63
August	96,098	2,203.05	.8230	1,813.11	2,562.62	.8230	2,109.04
September	89,353	2,048.42	.8113	1,661.88	2,382.75	.8113	1,933.13
October	117,348	2,690.20	.8321	2,238.52	3,129.28	.8321	2,603.87
November	118,145	2,708.47	.8520	2,307.62	3,150.54	.8520	2,684.26
December	119,984	2,750.63	.8611	2,368.57	3,199.58	.8611	2,755.16
January, 1929	165,184	3,786.84	.8502	3,219.57	4,404.91	.8502	3,745.06
February	160,960	3,690.01	.8414	3,104.77	4,292.27	.8414	3,611.52
March	175,960	4,033.88	.8667	3,496.16	4,692.27	.8667	4,066.79
April	180,249	4,132.21	.8793	3,633.45	4,806.65	.8793	4,226.49
May	194,724	4,464.05	.8821	3,937.74	5,192.65	.8821	4,580.44
June	186,277	4,270.40	.8936	3,816.03	4,967.39	.8936	4,438.86
July	198,713	4,555.50	.8914	4,060.77	5,299.02	.8914	4,723.55
August	198,044	4,540.16	.8962	4,068.89	5,281.18	.8962	4,732.99
September	154,561	3,543.31	.9005	3,190.75	4,121.63	.9005	3,711.53
October	174,545	4,001.44	.9085	3,635.31	4,654.54	.9085	4,228.65
November	109,155	2,502.38	.9092	2,275.16	2,910.80	.9092	2,646.50
December	63,601	1,458.05	.9792	1,427.72	1,696.03	.9792	1,660.75
January, 1930	90,529	2,075.38	.9797	2,033.25	2,414.11	.9797	2,365.10
February	114,714	2,629.82	.9716	2,555.13	3,059.04	.9716	2,972.16
March	156,386	3,585.15	.9626	3,451.07	4,170.30	.9626	4,014.33
April	192,275	4,407.90	.9480	4,178.69	5,127.34	.9480	4,860.72
May	186,961	4,286.08	.9298	3,985.20	4,985.63	.9298	4,635.64
June	169,489	3,885.54	.9386	3,646.97	4,519.71	.9386	4,242.20
July	56,702	1,299.89	.9648	1,254.13	1,512.06	.9648	1,458.84
August	103,200	2,365.86	.9617	2,275.25	2,752.00	.9617	2,646.60
September	94,616	2,169.07	.9630	2,088.81	2,523.10	.9630	2,429.75
October	79,907	1,831.87	.9633	1,764.64	2,130.86	.9633	2,052.66
November	73,022	1,674.03	.9637	1,613.26	1,947.26	.9637	1,876.58
December	52,616	1,206.22	.9636	1,162.31	1,403.10	.9636	1,352.03
January, 1931	32,700	749.65	.9650	723.41	872.00	.9650	841.48
February 2 and 3	5,166	118.43	.9641	114.18	137.76	.9641	132.81
	4,222,999	96,812.25		$86,921.15	112,613.45		$101,108.05

Revised Schedule II
Sheet 2

FORD MOTOR COMPANY

DEPRECIATION COSTS OF FORD CAM SHAPERS; MODEL A-6250 CAMSHAFTS

for the period from November 1, 1927 to January 31, 1931

Periods	Depreciation Rates	Depreciation	Per Cent Applicable to A-6250	Amounts
November, 1927	10.5%	$ 669.16	17.21	$ 115.16
December, 1927	10.5%	669.16	48.19	322.47
Year 1928	10.5%	8,676.16	87.50	7,591.64
January 1-15, 1929	10.5%	482.78	98.34	474.77
January 15-31, 1929	10.5%	482.78	100.	482.78
Eleven months ended December 31, 1929	10.5%	10,621.15	100.	10,621.15
Year 1930	10.5%	11,324.35	100.	11,324.35
January, 1931	9. %	796.62	100.	796.62
Total				$31,728.94

Schedule II
Sheet 3

FORD MOTOR COMPANY

DEPRECIATION COSTS OF MELLING CAM LATHES; MODEL A-6250 CAMSHAFTS

for the period from November 1, 1927 to January 31, 1931

Periods	Depreciation Rates	Depreciation	Per Cent Applicable to A-6250	Amounts
November, 1927	10.5%	$ 571.82	17.21	$ 98.41
December, 1927	10.5%	571.82	48.19	275.56
Year 1928	10.5%	6,861.85	87.50	6,004.12
January 1-15, 1929	10.5%	414.63	98.34	407.75
January 16-31, 1929	10.5%	414.63	100.	414.63
Eleven months ended December 31, 1929	10.5%	9,121.81	100.	9,121.81
Year 1930	10.5%	10,568.33	100.	10,568.33
January, 1931	9. %	754.88	100.	754.88
Total				$27,645.49

Schedule II
Sheet 4

FORD MOTOR COMPANY

COMPARATIVE COSTS OF MAINTENANCE REPAIRS ON FORD CAM SHAPERS AND ON MELLING CAM LATHES

for the period from November 1, 1927 to February 3, 1931

FORD CAM SHAPERS

Shift Numbers	Number of Shifts Worked	Number of Hours at Eight Hours per Shift	Number of Men in Maintenance Crew	Average Direct Labor Rates	Amounts
1	648	5184	1	.8951	$ 4,640.20
2	730	5840	2	.8951	10,454.77
3	708	5664	2	.8951	10,139.69
					$25,234.66

MELLING CAM LATHES

1	648	5184	1	.8951	$ 4,640.20
2	730	5840	4	.8951	20,909.54
3	708	5664	4	.8951	20,279.38
					$45,829.12

Schedule II
Sheet 5

FORD MOTOR COMPANY

COMPUTATIONS OF LOSSES DUE TO USE OF MELLING CAM LATHES FOR MACHINING MODEL F-446 CAMSHAFTS WHEN COMPARED WITH OTHER AVAILABLE MACHINES AND METHODS

for the period from June 16, 1925 to March 31, 1928

	Number of Camshafts Produced	Losses Per Camshaft	*Losses**
Losses due to use of Melling cam lathes:			
Compared with use of Ford cam shapers on Model T-410 production	3,420,166	$.0104	*$35,585.35*
Applied to Model F-446 production	275,664	.0104	*$ 2,866.91*
Compared with use of Ford cam shapers on Model A-6250 production	4,222,999	.0073	*$30,697.91*
Applied to Model F-446 production	275,664	.0073	*$ 2,012.35*

* * * * *

Revised Schedule IV

(17)

* Words and figures in italics were red in the original.

2. (a) In preparing its Schedule I, defendant has relied upon the cost of machining the cams of the Model T-410 camshafts on the machines known as the Ford cam shapers used for many years in the plant of the defendant Ford Motor Company.

2. (b) In preparing its Schedule II defendant has computed the cost of machining the cams of the Model A-6250 camshafts on Ford cam shapers of the type regularly used by defendant in its plant for machining Model T-410 camshafts.

* * * * *

2. (c) In preparing its Schedule IV defendant has relied upon the cost of using a Ford cam shaper computed from established comparative costs of the use of these shapers on Model T-410 shafts and Model A-6250 shafts as a standard of comparison. * * * * *

3. Paragraph No. 3 is fully answered by the answers to paragraph No. 2 hereof.

4. Answering paragraph 4, the Ford cam shaper employed by defendant as its standard of comparison is fully identified and described in paragraph 25 of Defendant's Statement of Account filed herein on September 27, 1937.

(18)

* * * * * No Ford cam shapers such as used by defendant Ford Motor Company are now in existence in so far as any present knowledge of defendant is concerned.

5. The following are the means and method by which defendant has arrived at all costs with respect to the standards of comparison used in the statement of account filed in response to paragraph 1 hereof, the summary cost schedules being set forth in answer to paragraph 1.

DESCRIPTION OF MEANS AND METHOD USED IN COMPUTING SCHEDULE I.

Direct Labor: The difference in cost of direct labor ($169,117.52 for Ford cam shapers and $176,848.62 for Melling cam lathes) for the period from June 16, 1925 to January 15, 1929 is based upon the difference in time required to put a camshaft through the comparative operations as follows:

Operations	Minutes Required	
	Ford Cam Shaper	Melling Cam Lathe
Straightening	-0-	.50
Shape or turn cams (one man operating two machines)	1.20	.86
Finish grind cams	2.30	2.30
	3.50	3.66

(19)

The operations for the Ford cam shaper were obtained from an operation report noted in a note book kept by foreman Spencer W. Libby. The approximate date of the report is April 1924.

The operations for the Melling cam lathe were obtained from operation sheet dated October 8, 1924 prepared by Victor F. Marentette of the Time Study Department.

The straightening operation was required before the shafts were placed in the Melling cam lathes, but not before being placed in the Ford cam shapers, because of the difference in the construction and the difference in operations of the two machines.

The foregoing minutes required to put one camshaft through the comparative operations were converted into fractions of hours and then multiplied by the monthly production of camshafts to arrive at the hours required each month to turn out the production. The hours required to turn out each month's production were then multiplied by the monthly average direct labor rates of Department 410 to arrive at the direct labor cost.

Depreciation: The comparative depreciation costs of the Ford cam shapers amounting to $19,248.69 and of the Melling cam lathes amounting to $16,921.58 were determined as follows:

The same depreciation rates were used for both types of machines. The rates are those allowed to the Ford Motor Company by the Treasury Department for federal income tax computations and are 9.5 per cent for the years 1920 to 1926 and 10.5 per cent for the years 1927 to 1930, inclusive.

The same period was used in both computations, that is, from June 16, 1925 to January 15, 1929. The entire depreciation cost of the machines was not used beginning in November 1927 because from that time to the end of the period both Model T and **(20)** Model A camshafts were produced. The depreciation for the period from November 1, 1927 to January 15, 1929 was prorated between the Model T and Model A camshaft cost computations on the basis of the number of camshafts produced.

The depreciation on the Melling cam lathes was computed on the original cost less 2 per cent discount plus installation costs and additions for sixteen machines.

The depreciation on the Ford cam shapers was computed on the original cost plus installation costs and additions for thirteen machines. Since some of the Ford cam shapers became fully depreciated during the period under review it was necessary to include in the computation the cost of a new machine at the last known cost for each old machine as it became fully depreciated. In this way depreciation was computed on thirteen machines at all times.

Maintenance and Repairs: The difference between the maintenance repairs of the Ford cam shapers amounting to $8,252.10 and the maintenance repairs of the Melling cam Lathes amounting to $14,853.80 is due to the fact that two maintenance men were required for the Ford cam shapers on each of the second and third shifts, while four maintenance men were required for the Melling cam lathes on the same two shifts. One maintenance man was required on the first shift, or midnight shift, for each type of machine.

The Ford cam shapers were overhauled by the maintenance men on the average of one machine per month or approximately every machine once a year. The Melling cam lathes were cleaned and freed of chips on the average of one machine each day or about twice a month for each machine.

(21)

The period covered by the computation is from June 16, 1925 to May 31, 1927. The May 31st date has been used as the end of the period because May was the last month in which Model T camshafts were produced in any great quantity, and therefore the last month full maintenance crews were required.

No records are available which would show the number of hours, or the number of shifts, the Melling cam lathes were operated during the period under review. An operation sheet dated October 8, 1924 gives the time of .86 minutes required for one man operating two machines to turn one camshaft on the Melling cam lathes. The .86 minutes converted into hours equals .0143 hours. Since eight men, each operating two machines, worked in this department, it would take the entire department .0143 hours divided by eight or .0018 hours to turn one camshaft. Knowing the time required for the department to turn one camshaft, that time was multiplied by the total production of Model T camshafts during the period from June 16, 1925 to May 31, 1927, 3,202,985 pieces, and the total of 5,766 hours the department must have worked was thus determined. The 5,766 hours was then divided by three, on the basis of three shift operations at all times during the period. The number of hours worked by each shift was then multiplied by the number of maintenance men required each shift on each type of machine to arrive at the total maintenance man-hours required to maintain the

machines each shift. And, finally, the maintenance man-hours were multiplied by the average direct labor rate for Department 410 during the period under review to arrive at the total dollar cost for maintaining each type of machine.

(22)

DESCRIPTION OF MEANS AND METHOD USED IN COMPUTING SCHEDULE II.

Direct Labor: The difference in cost of direct labor ($86,921.15 for Ford cam shapers and $101,108.05 for Melling cam lathes) for the period from November 1, 1927 to February 3, 1931 is based upon the difference in time required to put a camshaft through comparative operations as follows:

Operations	Minutes Required	
	Ford Cam Shaper	Melling Cam Lathe
Straightening (one man operating one press)	-0-	.60
Shape or turn cams (one man operating two machines)	1.3755	1.00
	1.3755	1.60

The minutes for the Melling cam lathe have been determined from Engineering operation sheets prepared at the time the Russian government through Autostroy Corporation was obtaining information in order to set up an automobile plant in Russia. See Exhibit 18 attached, which is also Defendant's Exhibit 214. The .60 minutes for straightening has been determined by converting the operation number 12, which is "Straighten" on "Hand Press" 100 pieces per hour. The 1 minute for turning has been determined by converting the operation number 13, which is "Turn Cam" on "Milling Cam Lathe" 30 pieces per hour. This latter operation was performed on the Melling cam lathe. **(23)**

In comparing the operations required if Ford cam shapers had been used, it appears that as no straightening operation was required for shaping the model T-410 camshaft, none would be required for the A-6250 camshaft;

hence, no time for straightening has been included in computing the cost of shaping Model A camshafts.

The time of 1.3755 minutes for shaping cams on Ford cam shapers has been determined from the computation by Mr. William F. Pioch set forth in Defendant's Exhibit 264 which shows that one rotation of the model T camshaft in the Ford cam shaper took 25.3 seconds whereas the model A camshaft would have taken 29 seconds. The proportionate increase from 25.3 to 29 applied to the 1.20 minutes for shaping model T camshafts, per Exhibit 13, results in the amount of 1.3755 minutes for shaping model A camshafts.

The foregoing minutes required to put one camshaft through the comparative operations were converted into fractions of hours and then multiplied by the monthly production of camshafts to arrive at the hours required each month to turn out the production. The hours required to turn out each month's production were then multiplied by the monthly average labor rates of Department 410 to arrive at the direct labor cost.

Depreciation: The comparative depreciation costs of the Ford cam shapers amounting to $31,728.94 and of the Melling cam lathes amounting to $27,645.49 were determined as follows:

The same depreciation rates were used for both types of machines. The rates are those allowed to the Ford Motor Company **(24)** by the Treasury Department for federal income tax computations and are 10.5 per cent for the years 1927 to 1930 and 9 per cent for the year 1931.

The same period was used in both computations, that is, November 1, 1927 to January 31, 1931.

The depreciation expense on the Melling cam lathes was computed on the cost of 16 machines from November 1, 1927 to January 3, 1929 when the first of 6 more Melling cam lathes was purchased. From January 3, 1929 to January 31, 1931 depreciation was computed on the cost of 17 to 22 machines.

The depreciation expense on the Ford cam shapers was computed on the cost of 13 machines from November 1, 1927 to January 3, 1929. From January 3, 1929 to January 31, 1931 depreciation was computed on the cost of 14 to

18 machines. The 5 more shapers were added on the same dates that the first 5 of the 6 Melling cam lathes were acquired. Only 5 shapers were added in order to maintain the same ratio between shapers and lathes, that is 13 to 16. In other words, for every Melling cam lathe acquired, it requires only .8126 of a shaper. The addition of the 6 Melling cam lathes requires the addition of 4.8756 Ford cam shapers. The last available cost was used as the cost of the additional shapers.

Maintenance and Repairs: The difference between the maintenance repairs of the Ford cam shapers amounting to $25,234.66 and the maintenance repairs of the Melling cam lathes amounting to $45,829.12 is due to the fact that two maintenance men were required for the Ford cam shapers on each of the second and third shifts, while four maintenance men were required for the Melling **(25)** cam lathes on the same two shifts. One maintenance man was required on the first shift, or midnight shift for each type of machine.

The Ford cam shapers were overhauled by the maintenance men on the average of one machine per month or approximately every machine once a year. The Melling cam lathes were cleaned and freed of chips on the average of one machine each day or about twice a month for each machine.

The numbers of maintenance men used throughout this computation, that is 2 and 4, are based upon the maintenance of 13 Ford cam shapers and 16 Melling cam lathes. During the year 1929 six more Melling cam lathes were acquired and for the depreciation computation five more Ford cam shapers were added. On a comparative basis the additional maintenance men that should have been required were .77 for the shapers and 1.5 for the lathes. The net difference for these additional men is .73. Since the difference is less than one man, no attempt has been made to adjust the computation.

The period covered by the computation is from November 1, 1927 to February 3, 1931. The number of hours worked by the maintenance crews was determined by multiplying the number of shifts worked by eight hours. The number of shifts worked was obtained from "Minute Cost Summaries," form 2202-B. The number of hours

worked by the maintenance crews, times the number of men in each crew, times the average direct labor rate for the period under review, equals the total maintenance cost.

(26)

* * * * *

8. Defendant has disposed of the infringing machines as follows:

Brass Tag Numbers	Dates of Disposition	Disposition
32067	November 9, 1928	Sold to Ford Motor Company, Cork, Ireland at book value
35472	June 18, 1931	Salvaged
36386	June 18, 1931	Salvaged
36451	June 18, 1931	Salvaged
36496	June 18, 1931	Salvaged
36552	June 18, 1931	Salvaged
36592	June 18, 1931	Salvaged
36848	June 18, 1931	Salvaged
36928	June 18, 1931	Salvaged
37501	June 18, 1931	Salvaged
37657	June 18, 1931	Salvaged
37754	June 18, 1931	Salvaged
37732	June 18, 1931	Salvaged
37844	June 18, 1931	Salvaged
37867	June 18, 1931	Salvaged
38005	June 18, 1931	Salvaged
37001	November 9, 1928	Sold to Ford Motor Company, Cork, Ireland at book value
38080	January 4, 1929	Sold to Continental Motors Corporation, Muskegon, Michigan for $2,200. Repurchased March 20, 1931
	June 8, 1936	Salvaged
57219	November 22, 1934	Salvaged
57220	June 8, 1936	Salvaged
57945	November 22, 1934	Salvaged
57903	November 22, 1934	Salvaged
57960	November 22, 1934	Salvaged
57578	Now available at Highland Park Plant	

9. As stated in answer to paragraph 12 in Defendant's Statement of Account filed on September 27, 1937, certain of the infringing machines were converted for turning the pump eccentrics of the Ford V-8 camshafts and were in use for the period from March, 1932, until the Fall of 1934. Defendant's records do not clearly identify which of these machines were so converted, but due to the fact that machines **(30)** bearing Brass Tag Nos. 57219, 57220, 57945, 57903, 57960 and 57578 were not salvaged until 1934 and 1936, it appears that these are the machines that were so converted. No change in the valuation record was made in defendant's regular system of accounting for value of these machines after such conversion.

10. During the period from January 1, 1923 to January 1, 1924 defendant produced approximately 105,797 tractor camshafts, all of which were rough ground. This figure is obtained by taking the motor numbers on tractors produced during such period and adding an approximate amount of 4,029 tractor camshafts which in all probability were produced and sold by defendant Ford Motor Company for service sales and replacements. The number of grinding wheels used by defendant during such period for the rough grinding of this number of tractor camshafts is estimated as 240 and the cost of such wheels is estimated as 240 x $7.50=$1,800.00.

FORD MOTOR COMPANY,
By B. J. CRAIG (signed)
Secretary.

(31)

(Ptf. Rec. Vol. III from page 34, line 26 to page 37, line 3 inclusive of Typewritten Transcript.)

Mr. Spohn: Now with respect to the defendant's further statement of account which has been identified for the purposes of cross examination as Exhibit C, the plaintiff **(35)** denies all the material in paragraph 1, page 1, denies all the material on schedule 1, sheet 1, and the whole page. Denies all of the material on schedule 1, sheet 2, page 3. Denies all of the material on sheet 3 of schedule 1, page 4 of the report. Denies all of the material on sheet 4 of schedule 1, page 5, of the report. Denies all of the material, sheet 5, sched-

ule 1, page 6. Denies all of the material on sheet 6, schedule 1, page 7. Denies all of the material on sheet 1, schedule 2, page 8. Denies all of the material, sheet 2, schedule 2, page 9. Denies all of the material, sheet 3, schedule 2, page 10. Denies all of the material, sheet 4, schedule 2, page 11. Denies all of the material, sheet 5, schedule 2, page 12. * * * Denies all of the material, schedule 4, page 17. Admits defendant's answer 2-A, in parentheses, on page 18, and denies defendant's answers 2-B and 2-C, appearing on page 18, and denies the answer to paragraph 3 appearing on page 18. Accepts the answer to the first sentence of paragraph 4 appearing on page 18. * * *

(36) Denies the answer to paragraph 5 appearing on page 19 and all the material, including the heading reading as follows, and thereafter set forth on that page: "Description of means and methods used in computing schedule 1."

Denies all the material appearing on pages 20, 21, 22, 23, 24, 25 and 26 * * *.

Plaintiff rejects Exhibits 13 and 14 referred to in the answer to paragraph 7 appearing on page 29, also rejects the following portion of that answer, (b) model a cam shaft—is attached hereto marked Exhibit 16, and (c) tractor cam shafts—is attached hereto marked Exhibit 17.

Plaintiff also denies and rejects so much of the following sentence as refers to Exhibits 13, 14, 16 and 17: "The operation sheets attached hereto and marked Exhibits 13 to 17, inclusive, are the only operation sheets which could be found after a most exhaustive search through all available records of defendant."

Plaintiff rejects the last sentence of the answer appearing on page 29, commencing with the words: "Exhibit 13," and except as herein qualified and rejected, plaintiff accepts the answer.

Plaintiff accepts defendant's answer to question 8 appearing on page 30. Also the plaintiff accepts the defendant's **(37)** answer to question 9 appearing on page 30.

Plaintiff also accepts defendant's answer to question 10 appearing on page 31.

TRANSCRIPT OF TESTIMONY.

Designated By Both Plaintiff and Defendant.

Proceedings had and testimony taken in the above-entitled cause, before DONALD L. QUAIFE, ESQ., Special Master, at Detroit, Michigan, commencing Thursday, March 17, 1938.

APPEARANCES:

MESSRS. LECHER, MICHAEL, WHYTE & SPOHN,
(Mr. John W. Michael, Mr. George D. Spohn and Mr. B. D. Watts, appearing),

Appearing on behalf of the Plaintiff.

MESSRS. BODMAN, LONGLEY, BOGLE, MIDDLETON & FARLEY,
(Mr. I. Jos. Farley, appearing),

Appearing on behalf of the Defendant.

PLAINTIFF'S RECORD.

(3)* FRED M. HOVIS was thereupon called as a witness, and having been first duly sworn, testified as follows:

CROSS EXAMINATION by Mr. Spohn.

Q. How do you spell your name? A. H-o-v-i-s.

Q. And your first name? A. Fred.

Q. And where do you reside, Mr. Hovis? A. 14678 Grandmont.

Q. That is in the City of Detroit? A. That is right.

Q. What is your occupation? A. Cost Accountant.

Q. And for whom? A. Ford Motor Company.

Q. And how long have you been employed by the Ford Motor Company? A. Twenty years.

Q. Are you a certified public accountant? A. No, sir.

Q. And during that twenty years of time have you been employed continuously by the Ford Motor Company? **(4)** A. Yes, sir.

Q. And have you had any outside employment other than that with the Ford Motor Company? A. No, sir.

Q. And will you state generally what your duties as cost accountant have been with the Ford Motor Company during that period of time? A. The object of a cost accountant out there is to compile costs on parts which are

---

*Figures in boldface type in parentheses indicate original pagination.

later to be assembled into a built-up automobile, and are to be generally used for costing sales and for setting selling prices.

Q. Do you have charge of the cost department? A. No, sir.

Q. Who does have charge of the cost department? A. Mr. Martindale.

Q. Other than Mr. Martindale and you, are there any other employees in the cost department? A. Yes, sir.

Q. And how many? A. About sixteen.

Q. And has that cost department been in existence all during the twenty years that you have been with the company? A. Yes, sir.

Q. What would you say with respect to the number of employees in the cost department from 1925 to 1931, if you have any memory on that point? A. It would be just about the same, although we have made some additions such as steel mills and rolling mills, which would (5) mean a little more clerical work, but probably there may be one or two more men now than there was then.

Q. Particularly, what were your duties in that department during that period of time? A. Well, when I first started in I started in on writing operation sheets, the different operations on the parts.

Q. Writing them? A. Writing them, yes, and that probably took up, oh, a year or more, and from that time on it was compiling costs, nothing else but that, overhead, and so forth, that have to do with costs, of course.

Q. And how were these cost figures used after you compiled them? A. Well, just as I say, they would be used for costing sales primarily and for setting selling prices on built-up automobiles.

Q. On the completed automobile? A. The completed automobile.

Q. And would those cost studies be used in costing sales for replacement parts too? A. Yes, they would.

Q. Is your cost system a regular part of the accounting records of the Ford Motor Company? A. Yes.

Q. Are permanent records kept of those cost figures? A. For a certain length of time.

Q. And for how long would that time be? A. On different records for different lengths of time. Possibly there isn't any set length of time on anything, it is just,—

(6) when we figure we haven't any more room for filing space they do away with a certain amount of it.

Q. Now, when you were compiling costs did you make permanent bound books of those cost figures? A. No, sir.

Q. Were they compiled just on loose-leaf sheets? A. No, compiled on cards, separate card for each part.

Q. A separate card for each part? A. That is right.

Q. And your costs of sales were determined with reference to these cards, were they? A. No, not necessarily. These cards would be used for assembling, for instance, a major assembly, a door, or something like that; why, we would set up the name of the assembly and then the parts contained therein and post from the cost cards onto this sheet and finally total them up to get the cost of the assembly.

Q. That would be a summary cost sheet, would it? A. That would be a summary cost sheet.

Q. But it would be a summary of all these individual cards? A. That is right. You see, it is impossible to cost sales every month completely, that is to cost all the parts. It can not be done, the volume of work is too much. The way that is done is a complete cost is figured periodically and a percentage for that particular month is made of the cost to the sales, and of course the sales are kept monthly and the cost is arrived at by applying this percentage of the sales to arrive at the cost, and after a certain period of time, why, (7) another cost is compiled to arrive at a new percentage.

* * * * *

Q. (By Mr. Spohn): Now then, as I understand your testimony, costs, cost studies are made periodically, are they not? A. That is right.

Q. And whatever cost figure you get when you make it periodically it obtains until you derive another one sometime later? A. That is right.

Q. And when you make your cost studies, what do you include in cost? A. Material, the direct labor which represents the labor of direct operations on the part and overhead, which takes in non-productive labor, and other elements of course.

Q. Is that done for each part? A. That is done for each part, yes, sir.

Q. Assuming that a part would have several operations in it, will you explain how you prepare cost records for that operation? A. We do not prepare costs by operations. We take the total direct labor chargeable against a part for a month, all direct labor is charged against this part and a record of the production (8) kept. The direct labor is divided by the production which gives us a minute cost for the part, including all operations, then of course this part is performed in a certain department, we have an average labor rate for that department. The average labor rate is applied on the minute cost per part, which gives us a labor cost per part, including all operations. Upon that labor against the part is applied the overhead percentage, the overhead percentage is arrived at by departmentally taking the total expenses or overhead and dividing by the total production labor. Of course when we apply this overhead percentage on the production labor for the part, why, that gives us the overhead for the part.

Q. What elements of expense are included in overhead, in your cost system? A. Well, there is non-productive labor, depreciation.

Q. Depreciation on what? A. On equipment, buildings, durable tools, machinery, land improvements, that is about all.

Q. What other items? A. Non-productive labor, maintenance, repairs, general expense such as general office expense, and so forth.

Q. Administrative expense? A. Administrative expense.

Q. Taxes? A. Taxes, yes, sir.

Q. Real estate taxes? A. Yes.

(9) Q. Personal property taxes? A. Yes.

Q. Now, in your cost-keeping during the period that you have been employed, you make a card for each part? A. That is right.

Q. At periods? A. That is right.

Q. And those cards are periodically re-checked, is that the fact? A. Well, a card is designed so it will take care of several months' costs, and the same card is used, of course; it is dated at the time they figure a cost and also dated the next time they figure a cost.

Q. And the next re-computation is put on the same card, is it? A. The same card, if there is still room for it. If there isn't we take a new card, of course.

* * * * *

(17) Q. (By Mr. Spohn): I call your attention to Exhibit 6 attached to and a part of Exhibit "A," and ask you to explain that Exhibit. A. Well, this is a photostatic copy of a cost card for the "A" camshaft. This particular part was produced in the rolling mill originally and the cost, the rolling mill cost per hundredweight of steel was transferred to this card and when multiplied by the weight of the part gives you the material cost here, and the additional figures here represent departments, individual departments in which—

Q. (Interposing): Just a moment. When you say "the figures here," you are referring to the column of figures on the left-hand side of Exhibit 6? A. Under "Department." Each one of those figures like 184, 1514, the "H. T." represents "Heat Treat," and "410" represents the camshaft department. Now, in each one of those departments certain operations were performed, and the labor and burden cost for those accumulated operations in each one of those departments was posted under labor and burden, and **(18)** the total of course represents the total material, labor and overhead cost, and shipping expense is arrived at on the basis of a percentage. It was at that time. The way costs are compiled now, this shipping expense comes right in the overhead in the general percentage.

Q. What kind of shipping expense, is that shipping in or out? A. Shipping out.

Q. Shipping out? A. Yes.

Q. Now, that card, Exhibit 6, covers two months, does it not, May and July of 1929? A. That is right.

Q. And it is a summary month card, is it a month's operation in those various departments? A. A month's operations, yes.

Q. And your testimony is that cost summaries like that were made at frequent intervals? A. That is right.

* * * * *

(19) Q. Does your department determine the burden figures for the particular month involved? A. Yes, sir.

Q. Is that a part of your duties? A. Yes, sir.

* * * * *

(23) Q. I refer you to Exhibit 10, in Exhibit "A," and ask you what that Exhibit is, appearing to be two cards, material price cards? A. These are cards that are kept by the pricing division where the requisitions are priced. This is a record of purchase order numbers, quantities and purchase order prices.

(24) Q. Those cards kept in your division? A. In the same division, yes, the pricing division is a division of the accounting department.

* * * * *

Q. Referring now specifically to Exhibit 10, to those purchase cards,—are those photostats of original cards? A. Yes, sir.

Q. And those cards are still in the possession, the originals are, of the defendant, the Ford Motor Company? A. That is right.

(25) Q. And they are in your division? A. That is right, I have them here.

Q. What does unit cost mean as found on those cards? A. Cost per piece.

Q. Cost per piece? A. That is right.

Q. And is the same thing true with respect to the second card appearing on Exhibit 10? A. That is right.

Q. Now I refer you to Exhibit 11, attached to Exhibit "A," entitled "Computation of Certain Items of Cost of Gordon Lathe Operation on Tractor Camshafts." Did you prepare that Exhibit? A. Yes, sir.

Q. All of it? A. In Section "C" here, rate of production, 5 shafts per hour, I did not—

Q. (Interposing): You did not compile that information? A. No, sir.

Q. From whom did you receive it? A. Mr. Farley. Paragraph 2, this is, 2 tool men, I didn't get that.

Q. From whom did you get that information? A. Mr. Farley. Production, 5 pieces per hour, that is from Mr. Farley. Cost of scrapping due to defective work, 60 per cent; I did not get that.

Q. Where did you get that information? A. Mr. Farley.

(26) Q. Now, I refer you to Exhibit 12, attached to Exhibit "A," entitled "Computation of Certain Costs Involved in Rough-Grinding Operation on Tractor Camshafts by Landis 10 by 36 Grinders During Period July 1, 1925, to January 1, 1928," and ask you if you prepared that Exhibit? A. On section "D" here, production per man, 8 shafts, I got that from Mr. Farley. Cost of grinding wheels, $7.50, I got that from Mr. Farley. Life of grinding wheel, 65 hours, came from Mr. Farley. Camshaft output in 65 hours, that came from Mr. Farley. That is all.

Q. The recapitulation of this Exhibit you prepared, however? A. That is right.

Q. Now with respect to Exhibits 8, 9, 10, 11 and 12, attached to Exhibit "A," do your own cost records that you have out there give you information from which you could compile the information secured from Mr. Farley? A. Partially.

Q. But you yourself did not compile that information? A. Not all of it.

Q. To what extent were those records incomplete as to that they would not furnish that information? A. Well, the information that we got from Mr. Farley?

Q. All that information you couldn't get from your own costs— A. (Interposing): No, sir.

Q. None of it? A. None of it, the cost accounting department has no information regarding operation cost such as maintenance, production, repairs, or anything like that, of direct operation, or (27) machine costs or expenses; we do not have anything like that all.

Q. All you have is cost summary cards? A. All we have is cost summary cards, which represent the cost of all the operations, not individual operations. In order to break it down and get the cost of a certain operation, we would have to get estimates or something on the production and maintenance and so forth for the individual machines.

Q. Would your records indicate production per hour? A. By machines?

Q. Yes. A. No, sir.

Q. By departments would it? A. By departments, which represent all operations. The only thing the cost department is interested in is getting a complete cost on the part, not in individual operation costs; we would have no

use for it. We use the complete cost on the part to apply against the part when it is assembled into a complete automobile.

Q. Does your depreciation on machinery and equipment depend upon operating hours? A. No, sir.

Q. It does not? A. It is applied on cost, depreciation is figured on cost.

Q. But over what life? A. Well, in this particular case it is the life of eight years.

Q. Not based on a machine hour, man hour rate? A. No, sir.

* * * * *

(30) Q. Now with respect to Exhibit 6, attached to and forming a part of Exhibit "A," cost summary sheet on a camshaft. A. Yes.

Q. That is the only cost summary sheet you have been able to find, is it, for camshafts? A. Just this one?

Q. Yes. A. No, I think we have two or three others besides this; this is an example, I think, this was supposed to represent.

Q. Do you have those others with you? A. I think we have.

Q. May we see those others? A. Yes. Model A cost cards, we have one here only.

Mr. Farley (Producing cards): Let Mr. Hovis look at these.

A. (Referring to cards): That is the original of this one, and here is a couple more of the "A." Here are some on the "B."

Q. (By Mr. Spohn): Some on the what? A. The prefix "B."

Q. What does that prefix "B" have reference to? A. I think it is due to a slight change in design, the same shaft, but due to some slight engineering change.

Q. Now, these cards that you have just handed me, may I have those marked for the purpose of identification?

Mr. Farley: These are original cards of the company, and while we are perfectly willing to have them for inspection **(31)** and all that sort of thing, we would like the privilege of substituting photostatic copies for the original, and I assume there will be no objection as far as counsel is concerned.

Mr. Spohn: No objection.

The Master: That will be taken care of.

(Documents were thereupon marked Exhibits D and E.)

Q. (By Mr. Spohn): Exhibits D and E have been marked with symbols A-2650 A and 1, are these two sheets tentatively marked for identification as Exhibits D and E, cost sheets, comparable to Exhibit 6, attached to and forming a part of Exhibit "A"? A. That is right.

Mr. Farley: Might I have the dates of those so we can know what periods they cover?

Q. (By Mr. Spohn): Exhibit E purports to cover the months of May and August, 1930; would you state that is correct? A. Also on the other side.

Q. On the face of the Exhibit, and on the reverse side purports to cover the months of October— A. 1930.

Q. And March of 1931, that is the fact? A. That is right.

Q. And the Exhibit, the card marked for identification as Exhibit D, on the face of the card purports to cover January of 1930 and March of 1930, is that a fact? A. That is right.

(32) Q. And on the reverse side the months of— A. This is marked September, I would say September and October.

Q. Of 1929? A. That is right.

Q. September and October of 1929? A. That is right.

(Documents were thereupon marked Exhibits F, G, H and I.)

Q. And the card that has been marked for identification as Exhibit E-1.

(A document was thereupon marked Exhibit E-1.)

* * * * *

(34) Q. Now I show you cards designated as Exhibits F, F-1, F-2, F-3, F-4, F-5, F-6, F-7, and F-8, which have just been produced at this hearing, and ask you what those Exhibits are, they being cards? **(35)** A. They represent individual costs on camshafts, 410 department, "T" model camshaft.

Q. I call your attention to Exhibit F, that Exhibit covers the months January to June, of 1923, inclusive, is that right? A. That is right.

Q. And Exhibit F-1 covers the months of July to November, inclusive, is it, of 1923? A. That is right.

Q. And Exhibit F and Exhibit F-1 relate to the "T" model camshaft cost? A. That is right.

* * * * *

(37) Q. Referring now to Exhibits E-1 and E and Exhibit D, being cost cards on the A model, these cost cards set forth certain burden figures, do they not, for the months therein involved? A. That is right.

Q. Do you have cost records anywhere indicating the component elements going into those burden ratios? A. Not for this particular time, no.

Q. Have you for any other time? A. Well, we have at the present time.

Q. Just the present time? A. Yes.

Q. The expenses which you have heretofore testified as being treated as a part of burden, when you derived these burden ratios set forth on Exhibits E, D and F, were those expense figures set forth in dollars or in percentages? A. They were set forth in dollars against the department; in the productive labor for the whole department, divided into the overhead to arrive at a percentage, and the percentage was applied on the unit labor cost of all parts produced in that department.

Q. And that was direct labor costs? A. Yes.

Q. And you do not have records now of those dollar overhead expenses? A. No, we do not.

(38) Q. Did you compile those overhead figures that were used in your allocation of burden by your department? A. I helped.

Q. And what was the compilation made on, made on cards? A. No.

Q. How was it compiled? A. Well, for instance, a summary of all the manufacturing expenses for material would be made from the requisitions and charged against each group, tabulating cards would be punched from there showing the expense account and the group, and the amount of money. That is just for general stores, material, the same procedure would go through on labor, the monthly labor

distribution, all the manufacturing expense accounts showing the dollars would be punched on tabulating cards.

Q. For that particular month? A. For that particular month, just for the month. The same thing would be true on the depreciation and journal entries, if there were any, and so forth, then of course they were automatically sorted by groups showing the total overhead distribution against each group or department.

Q. You say they were punched on cards? A. Tabulating cards.

Q. By a punch machine? A. By a punch machine.

Q. A Holdsworth machine, or some such machine? A. It is some such machine, yes.

Q. And these cards were sorted? A. Sorted by groups and then printed, and as they would be **(39)** printed they would show for each group, would show the expense account and the amount of money.

Q. Allocated to that? A. Allocated to that group, yes, and in addition to that, that is direct charges, in addition to that there would be the general expenses such as the office and so forth, which would be pro-rated over the different groups.

Q. When you say "groups" you mean "departments"? A. Departments, yes. The reason I say "groups," there is such a thing as to have more than one department with one overhead group. A department represents a clock card series and if two departments are similar it is possible rather than have two groups in going through the work and distributing expense twice we would have one group that represented two departments; that is the reason we call them "groups," although such wasn't the case for these costs here, a department represents a group.

Q. Do you still have those cards upon which was accumulated and punched this data? A. Tabulating cards?

Q. Yes. A. No, sir.

Q. Do you have any summary of those cards? A. No.

Q. For the years 1925 to 1931? A. No, sir, it takes an awful lot of cards; if I am not mistaken, we only hold the cards one month now, there are so many of them.

Q. And then what is done with them, do you know? **(40)** A. Just destroyed.

Q. One month after the month to which they apply? A. That is right.

Q. Do you know whether that practice obtained for 1925 to 1931? A. I wouldn't be certain as to that date.

Q. You didn't do the destroying yourself? A. No, sir.

Q. Or you didn't see them destroyed? A. No, sir.

* * * * *

(41) Q. (By Mr. Spohn): Now, Mr. Hovis, those burden cards that are punched, they are punched from some original data sheets, are they? A. Yes, sir.

Q. And did you compile the original— A. (Interposing): I would like to make a correction there. I said that all of the cards were tabulated; they were not, there was for the first period there the first number of years from, oh, 1923 on there we didn't have the tabulating machines in, and they were posted by hand, the same information exactly.

* * * * *

(43) And the general manufacturing expense, how was that compiled? A. That was charged to an individual group number, the same way, and we take the total of this group number and prorate it or distribute it over operating departments.

Q. Do you have those original sheets from which this data was compiled? A. No, sir.

Q. Do you know what became of those sheets? A. Destroyed.

Q. Do you know when they were destroyed? A. No, I don't.

Q. The general records of the company, however, for these years contain that basic information, do they not? A. Oh, yes, that is naturally they have it in a total, total manufacturing expenses for statements, but not allocated by groups for overhead purposes.

Q. And it is possible, is it not, to compile your burden figures now from those general figures on the ledgers of the company? A. You could not get it by groups, it just shows a total, for instance one account number would show total manufacturing expenses for that particular month for all departments in the **(44)** plant. It is a general ledger figure, it is not allocated by groups or departments at all.

Q. How was it allocated originally, in departments? A. It is allocated originally, as I stated, by taking the total

charges for the material or for labor, for instance, take labor as an example, it is punched from the time department records that are supplied the accounting department in hours for each account. The hours are extended by the hourly rate, by groups, and summarized by groups for the accounting department, overhead distribution only. Now, the summary of all these groups, the grand total of the expense is posted in the general ledger.

Q. But that grand total of course would be broken into items of expense? A. Not in the general ledger, no.

Q. But it would be in some subsidiary ledger? A. No, it is not posted in any ledger by groups at all, just in the total.

Q. But it is posted in the total? A. Just in the total.

Q. Was the overhead distributed to the departments on an area basis? A. For a certain number of accounts.

Q. What were those accounts? A. Repairs to buildings, depreciation on the buildings, sweeping and cleaning in the building; that is all.

Q. How about real estate taxes? A. Distributed that on valuation.

(45) Q. On a valuation basis? A. That is right.

Q. And how is your administrative overhead items allocated to departments? A. On a direct labor basis.

Q. What other items were allocated on a direct labor basis? A. All other items except the ones I just mentioned for valuation, which are taxes, and the ones that apply to the buildings which cannot be allocated to any department in the building, such as depreciation, repairs, and sweeping and cleaning, such as washing windows, and such things as that. All other manufacturing expenses are pro-rated on a labor basis, direct labor basis.

Q. Are your labor records complete for past years as to amounts of money paid for services in a department? A. Not by departments, that is overhead detail, you see, and we have no overhead detail at this time for that period by groups.

Q. When you come to take your inventory at the end of the year, how do you price your material with respect to merchandise on hand, finished cars, work in process, and so forth? A. At the present time we are pricing it at cost.

Q. How do you determine that cost? A. Just the way these cards are figured here, that is where the cost is taken from, from these cards.

Q. And does that same system obtain from 1925 to 1931, inclusive? A. Yes, sir.

Q. And your inventory was then priced on cost? **(46)** A. Yes, sir.

Q. Are those inventory records available for those years? A. I believe they are, I am not positive, I do not have anything to do with the inventory records, you see.

Q. You do not have any part in that? A. No.

* * * * *

(48) Cross Examination by Mr. Farley.

* * * * *

(49) Q. You referred during your cross examination to certain clock card series; just exactly what did you mean by that? A. Well, for convenience in making payrolls they designate clock card series which takes in a certain number of men, and they try to arrange these clock card series by departments, it is a little bit easier to turn in the time, turn in the average rate; for instance, a certain series has pay endings every two weeks, and if you take a certain period in relation to a department, why, it is easier to get an average rate that way than you would if you had one series representing more than one department, that way every department has an individual average rate.

Q. By the clock cards then you mean the time clock cards that are actually punched? **(50)** A. Punched in and out daily, yes.

Q. Just how does the company use those cards, if you know, in determining the direct labor costs for any one department for any particular month? A. The clock cards are pulled from the rack daily and the hours taken off of them and totaled up for the department.

Q. What department does that? A. The time department, and the distribution of time is made by the foreman, he allocates the time to an overhead expense account or direct to the symbol number. If it is charged direct to a symbol number. At the end of the day those hours are totaled up and distributed to the symbol num-

bers and the expense accounts and they are balanced with the hours shown on the clock cards.

Q. And that is turned over to the timekeeping department? A. That is turned over to the timekeeping department, and he posts that daily, he has a long sheet out there with the number of days in the month on and the accounts.

Q. That is the timekeeper in the department? A. The timekeeper in the department, he posts on there daily and balances the distribution to the account daily, with the hours on the clock cards. Then at the end of the month those are totaled up, this sheet that gives the total charge for the month in hours to each account. That is sent up to the accounting department and that in turn is balanced with the payroll hours which are taken of course again from the clock cards. We get a distribution of payroll hours and money from the payroll department. That is where we get the average rate from. And, those hours are again of **(51)** course balanced with a labor distribution.

Q. And those are the figures that are employed in your department for the preparation of these cost summary cards, is that correct? A. That is right.

Q. Now, you were asked concerning the destruction of the tabulating cards. Do you know why those cards are destroyed by the company? A. Their volume is so great, there are so many cards that it would be just impossible to keep them around, and we have no further use for them.

Q. Now, are these tabulating cards cards of the type that have a series of punch holes in and are put into a Burroughs adding machine and the totals— A. (Interposing): That is right, you see they have to punch one card for every item for every account charged, no matter how many times it appears, and it makes an enormous number of cards for even a small amount of money sometimes. The same account number can be used by different departments so many times, you see.

Q. Are those tabulating cards of any particular value as a record to the company after the cards have been put through the machine? A. No.

Q. To get the total cost? A. No, we have balanced the information on those cards with the payroll of course and the general book expenses, and after **(52)** that we have the information we need to compile a cost.

Q. Roughly, about how many cost summary cards are made up on the average each month in your department, I mean by that, do you or have you in your department at any time in any one month made out a cost summary card for each and every part that goes into the Ford cars? A. You mean have we made a new card in any one month?

Q. Take any one of these cost summary cards, take for example this Exhibit E-1, which covers the months of May and July of 1929, and it covers the camshafts. Now, of the two or three thousand parts that go into the Ford car, or that went into the Ford car in May or June of 1929, would your department have made out a cost summary card for each and every one of those parts, do you know? A. Oh, yes, we would have to have a card for each one and every part exactly the same as this one.

Q. Well, do you do that every month in your department? A. No, just when costs are figured.

Q. And then in any particular month where you are figuring costs you figure costs for the entire plant on everything, or do you take say one-half of the item say in May and June and then July and August take another half? A. No, we figure the entire cost when we compile it. One of the main objects of figuring the cost that way is to arrive at a new percentage figure, basis, to cost sales on parts.

Q. I see. Now, roughly, how many individual original records and sheets are required to be used in your department, **(53)** referring to these tabulating cards and any and all other records you might use, roughly, how many would you need and would you use to prepare all of the cost summary cards, would it be a matter of hundreds or thousands or tens of thousands, or what? A. I would say thousands, it is an enormous job, there are so many parts and so many different models, and each model of course as far as body types are concerned and commercial types has an entirely different set of parts and each one requires a separate cost.

Q. And then the information contained in all of these separate cards is tabulated, compiled and posted onto cost summary cards and they then, as a permanent record of the company, replace the separate original records? A. That is it, the detail, yes.

Q. Now, you were asked about the operation sheet and as to whether or not you were familiar with the operations in department 410, and that is the operation sheet that is attached to the Exhibit A and Exhibit 7; do your duties at any time take you out into the plant to observe any of those operations; are you in the habit of going out into the plant in the various departments? A. No, primarily the cost department in the office is only interested in the total production and direct labor charged against the parts for the month. That is all that is necessary to compile costs. This is written up as a target and more to help the foreman, show him about what these different operations of time that should be taken to produce **(54)** them.

Q. Do you know anything about the system that is used to compile those operation sheets? A. In general.

Q. Would you state generally what it is? A. Well, they send a man around with a stop watch and he takes a reasonable length of time to clock these different operations and makes allowance, he does not just take how many a man can do in half an hour, he has certain bases that are set up for what they call fatigue, a man getting a drink and just relaxing and just standing around, you might say; there is a certain percentage, that has to come off. In other words, the time study is taken that represents a fair figure that it should be produced in, not an impossible figure, just what it ordinarily should cost.

Q. You mean a fair figure extending over a rather extended period of time rather than five or ten minutes' operation? A. Yes, in fact another thing that they use this time study for that they have used it, for instance a department they think is over-manned, there are too many men in there and they have taken time studies and figured the production, the required production and based on this time study about how many men should be in that department, and they have reduced the force according to the study made from the time study and still got out the regular production. It shows that they were actually over-manned, see.

Q. Now, would you think, from your knowledge of the methods used by the Ford Company, that the operation sheets are reliable in order to obtain costs on a particular one or **(55)** part of the many operations covered by the cost summary card such as Exhibit "E"? A. Yes.

* * * * *

A. I would like to say in as much as these time studies are used by the foreman as a guide for the parts they produce and they concentrate their efforts to bring this actual minute cost down to the time study which they do, I would say that they represented very close to the actual time.

* * * * *

(56) Re-Cross Examination by Mr. Spohn.

Q. But these cost summary cards, some of which you have been able to produce, those are important, are they not, from the historical cost standpoint? A. No, I wouldn't say so.

Q. Compare costs year in and year out with prior years' costs in your plant? A. What is that again?

Q. Don't you compare one year's costs against the prior year's costs? A. We have a summary of automobiles, that is the only thing, we have a complete summary of the cost of a car, we have those all the way back, but not by individual parts. There is no occasion that I know of where anybody has requested a comparison of individual parts from one year to another.

Q. So you have none of that comparative cost data for those years? A. No, not on parts for those years.

Q. Now, when a time study is made in a given department do you know how that time study is made? A. Not any more than I just stated, by taking a stop watch and (57) going and watching the operations, after production has reached the point where it is somewhere near normal.

Q. And then how long do you know would that time study consume in that department? A. Oh, no, each operation might take a different length of time. It all depends on the number produced. Sometimes a certain operation they produce a lot more than they do others, and it requires different lengths of time on different operations, but just how long I couldn't state.

Q. Will it be perfected in one day, would you say generally? A. On a whole job?

Q. Yes. A. Oh, no, here is a job here that has some 40 so operations, another one might have 3, so there would be no scheduled length of time to take the time study of a part, it would be all based on operations.

Q. Now, when you pointed to this job you referred to Exhibit No. 7? A. That is right, attached to Exhibit "A," I believe.

Q. Yes. And that had 72 operations? A. Well, I made a mistake there.

Q. And each of those 72 operations would be timed, is that right? A. That is correct.

Q. Would they be timed once, each of the 72? A. Well, if conditions looked right on that particular day, not necessarily once, if it looked like they are speeding up the operation, because the time study man is there, he may **(58)** become a little suspicious and take it and drop back the next day, or maybe a week from then. He may take several to satisfy himself it is correct. The object is to get a fair time study, and of course he uses his own judgment to arrive at that.

Q. Per part? A. Per part.

Q. Per part, yes. Assuming that the company were to discontinue the use of certain machinery or equipment upon which an operation was performed, and installed new equipment, would time studies then be made in your opinion on the new equipment? A. Oh, yes.

Q. And what would be done with the time studies theretofore made on the old equipment which was now replaced by the new equipment? A. I think it would be just brought up to date, just like this last one is here, it would be revised as of a certain date, that is one of the reasons that they have revisions; if there was no changes in the equipment or the method of manufacture there wouldn't be any necessity for writing a new operation sheet.

Q. Then on Exhibit 7, for example, attached to Exhibit "A," which is revised to July 1, 1931, that might extend backwards over different items of equipment in the same department? A. Yes, sir.

Q. And revisions made whenever a new item of equipment comes in? A. That is one of the reasons; there may be other reasons.

(59) Q. When a revision is made the prior cards are destroyed? A. Prior time study?

Q. Yes. A. Yes, sir. The reason for that is so that they can not get them mixed up and use the old one instead

of the revised one. When they issue a new one they check the old one and destroy it.

Q. Do you know whether your department, or did you yourself compile any actual cost of shaping and turning camshafts for any period within the years 1925 to 1931? A. No, sir, just the turning operation that you are talking about now?

Q. Yes, that is it. A. No, I never did.

Q. Do you know whether there were any such cost records compiled? A. Not to my knowledge.

Q. Would you have knowledge of that if those records were compiled? A. Yes, I think I would in the cost department.

Q. Would any other departments compile such cost records other than your department? A. All costs are supposed to be compiled in the cost department, where the figures are available, of course, such as labor rates and burden rates, and so forth.

Q. So that you are sure that there were no such cost records compiled? A. That is right.

Q. For any of the years 1925 to 1931, inclusive? **(60)** A. That is correct.

* * * * *

RE-CROSS EXAMINATION by Mr. Farley.

Q. Just a minute, Mr. Hovis. You said in answer to Mr. Spohn's question that there may be other reasons as to why new operation sheets would be prepared. Would you please state what those other reasons might be? A. The location, the re-arranging of the department might be changed, they may change the location of the machinery without getting any new equipment, but somebody might devise a new lay-out of the department where there would be less trucking from one machine to another, less handling, and so forth. Such things as that are going on all the time, where they can speed up the production by handling it less, which reduces the time study and does not necessarily involve bringing in new equipment.

Q. How about changes in the construction of a part due to model changes? A. Oh, yes, sure.

Q. That is changes from "T" to model "A"? A. Changing the design, yes.

Q. That is of course one of the other reasons? A. Yes.

Q. Now, in view of Mr. Spohn's questions concerning the practice of the company in keeping records on the shaping or **(61)** turning of cams of the camshaft, would you please tell the Court what you told me when I came to you and asked you to give me such costs, if you remember, when I first got in contact with you out there on this particular proposition? A. Well, I don't know what I told you, but there is only one explanation that I can give. We do not compile operation costs because we haven't any use for them. Our object is to get complete costs of all operations on the parts only, and that is necessary to arrive at the total manufacturing cost of the parts so that it can be assembled into the built-up automobile. We never have any requests for operation cost, and if we did go to the extent and the expense to charge overhead, and so forth, by machines, which literally would make thousands and thousands of overhead group distributions, why we wouldn't have any use for it after we got it. We do not get any more costs than is absolutely necessary for our needs, which is to get the cost of a built-up car to set selling prices and to cost our parts sales.

Q. Do you know of any practical way in which the company, you as a member of the accounting department, know of any practical way in which the company could keep records of the output per hour, for example, of each and every individual machine in the Ford plant? A. They would have to assign a number so that labor could be charged to that machine and production could be kept for that machine, the expense and overhead repairs and depreciation and upkeep of that particular machine would have to be **(62)** allocated. It means where we have one group number now for all the machines in a department we would have to have a separate labor charge and overhead group for every operation and machine.

Q. Do you know roughly about how many thousands of machines there are in the Ford plant? A. I haven't any idea, I couldn't say, it is a big plant and it is full of them.

Q. Now, with respect to the questions on the compilation of individual operation costs, is it the practice of the

company to keep or compile any such costs at the present date? A. No, sir.

Mr. Farley: That is all.

RE-CROSS EXAMINATION by Mr. Spohn.

Q. And the reason it does not compile such costs is because it has no use for them? A. That is it exactly.

Q. That is the only reason? A. That is right.

* * * * *

---

(67) HAROLD M. WOEHRLE was thereupon called as a witness, and having been first duly sworn, testified as follows:

CROSS EXAMINATION by Mr. Spohn.

Mr. Farley: If your Honor please, and if Mr. Spohn hasn't any objection, I would like to ask Mr. Woehrle the general question concerning his connection with this matter, how he got in, and what he was instructed to do.

The Master: I think that would be a good way to begin.

The Witness: As I recall, it was about October 29, we got the second request, or Mr. Farley got the second request; it was about November 1st I was called in on the case.

Mr. Spohn: What year, 1937?

The Witness: 1937.

Mr. Farley: For the purpose of the record by the second **(68)** request you mean the second order we received from the Master to furnish a further statement of account?

A. Yes, it is dated October 29th, I think. Then, about November 1, 1937, I went directly to the Ford Administration Building and interviewed Mr. Hovis to find out just how far he had gone in his work. I obtained from him the department head names, the names of the department heads, and the shop foremen, and anyone that might give me a lead where I could find the records. I spent from November 1 to December 25 getting this information, and compiling the various figures used in the amendment to the

first answer, which is Exhibit B, and the allowance used in the Exhibit C. During that time, almost two months, I went probably to every department head and shop foreman that would in any way become connected or have anything to do with the camshaft for that department. I spent almost a week in the Highland Park files going through drawer after drawer, and box after box of old records, which even the filing clerk didn't know were there. I also went through drawer after drawer in the basement files in the Administration Building in Dearborn searching for records. I found additional cost summary cards, operations sheets, productive labor reports, minute cost summaries, which were used in the preparation of Exhibits B and C. I guess that is all I have in summary.

Q. (By Mr. Spohn) Mr. Woehrle, you reside here in Detroit? A. I just moved to Detroit from Ferndale this week.

Q. This week? A. Yes.

Q. Where is Ferndale? A. Ferndale is—well, in fact, it was three blocks north of the (69) boundary line of Detroit.

Q. You are associated in business with what firm? A. Lybrand, Ross Brothers & Montgomery, Certified Public Accountants.

Q. And they have their office in what city? A. We have about 30 offices. The office here is 2912 Book Building.

Q. Is that in charge of an office manager? A. That is a resident partner.

Q. Who is the resident partner? A. Donald Russell.

Q. And you are associated with that firm of accountants? A. I am.

Q. And are you a certified public accountant? A. I am.

Q. Certified under the laws of what state? A. State of Michigan.

Q. How long have you been so certified? A. Since December 31st, 1934.

Q. In your firm, how many accountants are there, in the Detroit firm? A. That varies between seasons, of course.

Q. At or about November or December, 1937, about how many would you say were employed by your firm? A. 35, approximately.

Q. You have senior and junior accountants employed by your firm? A. Well, we designate them as such, but there is a gradual transition from a junior to a senior, of course.

Q. During this work that you did for the defendant, Ford Motor Company, in November and December, 1937, did you have any **(70)** assistance from your office? A. Very little.

Q. Did you have any? A. Our records would tell the actual number of hours. We do keep our records on an hourly basis up to date by the hour, so that we could tell how many hours of assistance I had.

Q. Did you have any assistance out at the plant at all, or was there any assistance— A. (Interrupting) I had one man assisting me by the name of Shawkey, who directed me to the various places where I desired to go.

Q. He was an employee of the Ford Motor Company? A. He still is.

Q. Did you have any of your other associates from your office out working with you in the month of November and December, 1937, while you were working on this? A. A few days or perhaps a week. I don't know exactly. It is in our record over there, if you care to know exactly how many hours.

Q. Anyway, the search you made through these drawers you spoke of, was done by you, was it? A. Almost entirely. I did have help during one week over there at Highland Park, a man by the name of Willey, who assisted me in dusting off the records and digging in for them. I gave him a list of just what I was looking for, or what to look for.

Q. Did you spend any of your time in the general records of the Ford Motor Company? A. By "general records" what do you mean?

Q. General accounting records, ledgers, and general records of **(71)** account? A. You mean the general ledger?

Q. Yes. A. No, there are no files in the general ledger, which would—

Q. (Interposing) Did you go into it? A. I have worked on the general ledgers time and again, but this time there was no need for it.

Q. Do you do any auditing work for the Ford Motor Company? A. The Ford Motor has no audit.

Q. Do you do any accounting work for the Ford Motor Company other than the work you performed in November and December, 1937? A. I do.

Q. What is the nature of that work? A. Principally income tax and other taxes.

Q. But, it doesn't include audit work? A. No, they have their own internal auditing staff.

Q. Their own internal auditing staff? A. Yes.

* * * * *

(80) Q. The last paragraph beginning on page 9, starting out: "Cost of power consumption"; did you prepare any of that? A. I computed 55 hours of actual operation per wheel, based upon studies made by Mr. Price of the tool supply room.

Q. Did Mr. Price tell you that 55 hours should be used? A. Yes.

Q. You made no independent study of your own? A. No.

Q. When Mr. Price made that statement to you, did he have any written study of it, or just an oral statement? A. I might elaborate and state that Mr. Price gave me records from which I compiled the 55, and then he OK'd what I had **(81)** compiled. In other words, he checked it back.

Q. What records did you use in compiling that 55 hours of actual operation? A. As I remember it, they were from about 8½ by 11 type sheets, bound in a folder that he had maintained year after year for his own individual information; not a company record.

Q. But they would relate to what? A. They related to grinding wheels.

Q. Do you have those records? A. I do not.

Q. They were made available to you, though? A. They were. I can produce them, if necessary.

Q. And the individual's, who compiled those records, name was Mr. Price? A. Mr. Price.

Q. All right.

* * * * *

(98) Q. And now what is Exhibit "G"? A. Exhibit "G" is called a cost summary. It is a 5 by 8 card.

Q. And it is on form similar to Exhibit G; that cost is summarized by departments, is it? A. Will you please repeat that question?

Q. I say, it is on cards similar to Exhibit G, that costs are summarized by departments, for a department? A. No, I think you will find that the productive labor reports are the summaries by departments, and periodically these cost summaries are prepared in order to cost the finished car, in order to cost the parts for the finished car.

* * * * *

(105) Re-Cross Examination by Mr. Spohn.

Q. Just refer to page 26 again, the paragraph beginning on the top of page 26, "The Ford cam-shaft shapers were overhauled by the maintenance men on the average of one machine per month, or approximately every machine once a year. The Melling cam lathes were cleaned and freed of chips on the average of one machine each day, or about twice a month for each machine." Is that your text? A. That is.

Q. And where did you secure the information upon which you base that statement? A. From maintenance men working in the maintenance department of the Ford Motor Company.

Q. Did you have any records of the company that indicated such overhauling on which you base that statement? A. There are no records to my knowledge of the maintenance, there are records setting forth the general overhaul costs.

Q. Who were the maintenance men with whom you talked? A. May I refer to my notes?

(106) Q. Sure. A. (Referring to notes.)

Q. These notes that you are now referring to, Mr. Woehrle, are they what we call work papers? A. Working papers, they are notations I jotted down as I was talking to the various men in the shop. Mr. Henry Pillinger made the statement that the Melling machines were torn down on the average of one each day, or every machine once in sixteen days. Mr. John Smith made the statement that the major job in keeping the Melling machines clean—the major job was in keeping the Melling machines clean

and free from chips and that two machines were down all the time.

Q. And by "down" you mean what? A. Not operating.

* * * * *

(111) Q. Now, Mr. Woehrle, will you take Exhibit C and refer to Schedule 1, sheet 1, page 2, that Exhibit, you have that before you? A. I do.

Q. That Exhibit purports to set forth losses sustained upon certain operations in machining model "T 410" cam shaft on the cam shapers as against the Melling cam lathes? A. Yes.

Q. Is that the purport of that Exhibit? A. That is right.

Q. Now, you understand, do you, that under the order of this Court the accounting was to be—the accounting of the defendant was to be of profit, gain and advantages? A. That is right.

Q. Derived by the defendant from the use of the infringing machine, you understood that? A. I understood that.

Q. And when you prepared Exhibit C did you have that order in mind? A. Yes, sir.

Q. And the Schedule 1, sheet 1, that is an attempt to arrive in figures of the profits, gains and advantages derived by the defendant from the use of the machine, is that a fact? **(112)** A. I don't like the word "attempt."

Q. Well, it is your version of it? A. It is my version of it, yes.

Q. Now, Mr. Woehrle, in Schedule 1, sheet 1, you do not have any overhead figures, do you? A. No.

Q. You did not use overhead anywhere in your report, Exhibit C, did you? A. I did not.

Q. Why didn't you? A. There were no records available which I could use that would be—would throw any light on the profit or loss with the machines.

* * * * *

Q. Did you have the advantage of an analysis of Exhibit 11 attached to Exhibit A while you were preparing Schedule 1, sheet 1, in Exhibit C? **(113)** A. I was aware of it, yes.

Q. And you were aware then of the burden percentage figure appearing in the paragraph, the center of the first page of Exhibit 11? A. I was.

Q. And you did not use that percentage? A. I saw no connection between that percentage and any of the figures that I used or needed to use.

Q. So then your testimony is that you did not— A. (Interposing): You will note that is the burden rate for the entire department. I was interested in operations of specific machines, that is why I did not use any burden rate. There were no burden rates applicable to individual machines.

Q. Ordinarily cost of manufacture item contains what elements of cost? A. Just in general?

Q. In general. A. The cost of manufacture includes material, labor and overhead.

Q. And burden? A. Well, overhead is the same term for burden.

Q. Ordinarily a manufactured article would include those three elements, would it not? A. It will.

Q. Will you refer to Exhibit 6, attached to Exhibit A, being cost summary sheet for the month of May, 1929, and July of 1929. Will you refer to department 410. Burden is computed on that cost summary sheet, isn't it, for those two months? **(114)** A. It has been posted here.

Q. It has been posted here? A. That is right.

Q. And did you have the advantage of an examination of Exhibit 6 attached to Exhibit A when you were preparing Exhibit C? A. I did.

Q. And I show you now Exhibit E-1, and the reverse side thereof, cost summary for March, 1929, and referring to department 410, there is a burden figure there posted, is there not? A. There is.

Q. And did you have the advantage of an examination of that Exhibit E-1, and the reverse side, when you were making Exhibit C? A. I did.

Q. And I refer you now to Exhibits F-4, 5 and 6, and ask you if you had the advantage of an examination of those cost summary cards when preparing Exhibit C for months therein set forth? A. I did.

Q. And those cost summary cards have posted burden figures, do they not? A. They do.

* * * * *

(115) Mr. Spohn: Referring to Exhibit F-6, and particularly on the left-hand side where there is typed "Inventory December 31, 1926," what is the significance of that language?

Mr. Hovis: That inventory or that cost is a special cost that was compiled to price the inventory.

Mr. Spohn: As of December 31—

The Master: If Mr. Hovis is going to answer several questions, I do not know that he has to take the stand, but bring him up closer to the reporter.

Mr. Spohn: What was your answer, Mr. Hovis?

Mr. Hovis: That cost was compiled as a special cost to price the inventory.

Mr. Spohn: On December 31, 1926?

Mr. Hovis: That is right.

Mr. Spohn: And was that pricing done for general record purposes of the Ford Motor Company?

Mr. Hovis: Yes.

Mr. Spohn: And that figure was then carried into the inventory records?

(116) Mr. Hovis: Yes.

Mr. Spohn: And tax returns made out on the basis of that inventory?

Mr. Hovis: I wouldn't be familiar with that.

Mr. Spohn: But that special pricing computation does include a burden as posted for department 410, does it not?

Mr. Hovis: Yes, sir.

Mr. Spohn: For December 31, 1926.

Mr. Hovis: That is right.

Mr. Spohn: And would that be for the material or cam shafts then on hand?

Mr. Hovis: Yes.

Mr. Spohn: Manufactured in department 410?

Mr. Hovis: Yes.

Mr. Spohn: Do you know whether that same policy was pursued for each of the other years, December 31, 1927?

Mr. Hovis: No, I don't know.

Mr. Spohn: You don't know, each of the other years following December 31, 1926, you don't know?

Mr. Hovis: No.

Mr. Spohn: That is all, Mr. Hovis.

Q. (By Mr. Spohn): Now, Mr. Woehrle, in connection with the preparation of Schedule 1, sheet 1, Exhibit C, if a certain amount of overhead is attributed to a department isn't it customary then to distribute that overhead among the various operations of that department on some basis for distribution to be worked out generally? A. I don't think so.

(117) Q. That hasn't been your experience? A. No, sir.

Q. These cards, Exhibit F-1 to Exhibit F-6, indicate that was the defendant's experience, do they not? A. No, sir.

Q. They do not? A. The department as a whole, that is the department as a whole.

Q. As a whole, yes. A. As a whole.

Q. Why couldn't that overhead assigned to the department as a whole be assigned to operating activities in the department? A. What would be the purpose of assigning?

Q. Well, could it be done on some basis of proportionment or assignment, assuming there was a purpose? A. I don't know how you could do it unless you knew how much space these machines occupied.

Q. But knowing that? A. Well, you would have to know what space these machines occupied for every day and every month and every year.

Q. And knowing that? A. And knowing that you would have a square footage or a cubic volume, perhaps, basis, but that is just an approximation.

Q. All apportionments of overhead or allocations are approximations, are they not? A. Oh, not exactly, some are metered.

Q. There is no scientific method of distributing burden, is there? **(118)** A. There are methods in practice that are accepted by accountants.

Q. Now on Schedule 1, sheet 1, of Exhibit C, in setting up the losses there computed, did you give any effect to tool expense? A. You will note in Footnote "A" it says, "No cost records are available to show by separate operations the comparative power costs, tool costs, scrap losses or other incidental items."

Q. Well, will you turn to Exhibit A and Exhibit 8 attached to it. Item "H" is cutting tool costs per cam shaft? A. Yes.

Q. And the first statement submitted by the defendant then in Exhibit A there was such a cutting tool cost, was there not, worked out? A. Apparently so.

Q. Did you have the advantage of that information when you prepared Exhibit C? A. I did.

Q. And how much is that cutting tool cost as worked out there in item "H" of Exhibit 8 attached to Exhibit "A"? A. This statement says .0003.

Q. Per cam shaft? A. Per cam shaft.

Q. Now will you turn to Exhibit 9, attached to Exhibit A, and turn to item "G" of Exhibit 9. A. Yes.

Q. There is there set forth the cutting tool cost per shaft, is there not? **(119)** A. It appears so.

Q. And that figure is .0027? A. It is.

Q. Which is a much higher tool cost than that set forth in Exhibit 8, is it not? A. Yes.

Q. And Exhibit 9 purports to refer to items of cost in shaper operations in model "T" cam shafts? A. Yes, sir.

Q. And Exhibit 8 purports to cover computation of certain items on Walcott machine operation? A. Yes, sir.

Q. Now will you turn to Exhibit 10 attached to Exhibit "A." Now, Exhibit 10 purports to be material pricing cards for certain periods in there indicating the cost of cutting tools, does it not? A. It does.

Q. And do you know whether those are original records of the company, photostats of original records? A. I believe they are.

Q. You paid no attention to Exhibit 10, did you, in the computation of your Schedule 1, sheet 1? A. It did not cover the period I was interested in, my computation—

Q. (Interposing): Just say whether you did or not, you paid no attention to it? A. Do I have to say that?

Q. That is the question, you paid no attention to it?

(120) Mr. Farley: If your Honor please, I think the witness should be allowed to explain. Read the question.

(The question was read by the reporter.)

The Court: I think he can answer the question "yes" or "no" first and either the cross examiner ask for an explanation, or he can give it on re-direct. Answer the question "yes" or "no."

A. No, because it did not cover the period from June 15, 1925, to January 15, 1929, the period covered by my computation.

Q. With such a material difference in cutting tool expense, if you had been able to secure the information you would have given effect to that, wouldn't you? A. I would have.

Q. And if the information can now be secured, in your judgment effect should be given to it, should it not, in the computation of Schedule 1, sheet 1? A. I agree.

Q. The only question is the information is lacking? A. That is right.

* * * * *

(124) Q. Will you turn to Exhibit—before I go into Exhibit 13, Mr. Woehrle, assuming that you were directed or employed to derive the cost of an operation requiring machine work, a particular piece of material, considerable labor, would you set up any cost of that operation if it did not include burden? A. I think I would.

Q. And then you want to be understood as testifying that when the report in Exhibit C here is set forth the profits, gains and advantages derived by the defendant from the use of the infringing machine, that if there is any saving in overhead or burden that is not to be attributed as a profit, gain or advantage? A. If the burden is determinable I agree that you should make some allowance for the burden.

Q. Now, then, you want to be understood as testifying that if the burden figures can be determined— A. (Interposing): That is right.

Q. (Continuing): —upon the operation of turning these cam shafts— A. (Interposing): That is right.

Q. (Continuing): —effect should be given to that burden figure? **(125)** A. Absolutely.

Q. In any comparison as between the operation on the shaper or on the Melling cam lathes? A. That is right.

Q. But the fact is that you have not reflected the burden figures anywhere in Exhibit C? A. No, sir; I will

further add that I have only used figures where I could point or pick out of a record or absolute statement of an employee. I made no assumptions that were not based upon facts and figures obtained from those two sources.

Q. But your report, Exhibit C, does include several conclusions based upon that information? A. That is right.

* * * * *

(150) Cross Examination by Mr. Spohn.

Q. (By Mr. Spohn): Now then, Mr. Woehrle, referring to Schedule 1, sheet 1 again, and your explanation, the description of means and methods appearing on page 19, if you **(151)** had computed and used burden in this matter, even under the time consumption that you have used on the bottom of page 19, it would have operated to the benefit of the plaintiff, would it not, in your accounting? A. Will you please repeat the question?

(The question was read by the reporter.)

A. No, principally because I do not see how you could figure any burden time.

Q. Assuming that burden can be computed for the periods of time involved in the accounting of Schedule 1, sheet 1, from June 16, 1925, to January 15, 1929? A. Well, if burden could be computed, I believe it would be the same for each type of machine, because the machines themselves are practically the same type of machine, they are not—one does not occupy a whole building, and the other just a corner of the building; there are all machines—I took a look at some samples or exhibits over in the Highland Park plant, and they all just looked like machines to me, and if those machines would occupy different amounts of space, I can't see how they would,—it appears to me that the space needed for those type of machines would be about the same, whether you use the millers or shapers, since overhead or burden could be figured on the space occupied, I do not see how it would make much difference whether you use the burden or not.

Q. Would you give no effect to the fact that less time was consumed on the Melling cam lathe than on the Ford shapers, in the distribution of burden to an operation? **(152)** A. Just what do you mean, more or less time?

Q. Read the question, Mr. Reporter.

(The question was read by the reporter.)

A. I do not think time would make much difference, if you are taking taxes and depreciation and these overhead amounts, time does not make much difference in one operation.

Q. But on reference to Exhibit 6, attached to Exhibit "A," burden is there apportioned, is it not, to department 410 on a labor basis? A. On a labor basis?

Q. Yes. A. On a direct labor basis.

Q. On a direct labor basis? A. Yes.

Q. And you wouldn't use that basis? A. Suppose you did use a direct labor basis, I cannot see that it would make any difference.

Mr. Spohn: I ask that the answer be stricken as not responsive. Will you read the question?

The Master: It is stricken. Read back the question.

(The question was read by the reporter.)

The Master: The question is whether you would use that basis and not what difference it would make if you did use it.

A. I see. I wouldn't use direct labor entirely, principally because space has a lot to do with allocating expenses.

Q. (By Mr. Spohn): But you would use direct labor to some extent? **(153)** A. Yes, for certain operations.

Q. And you did not use burden in the computation of the loss that you set up on Schedule 1, page 1, of Exhibit "C"? A. I didn't use any burden figures.

• • • • •

(155) Q. Now, will you refer to page 19 of Exhibit "C," and the computation near the bottom of the page, there is assigned to straightening one-half minute on the Melling cam lathe, and then turn to page 20, paragraph 3, I will read you this paragraph, that is page 20, Exhibit "C": "The straightening operation was required before the shafts were placed in the Melling cam lathe, but not before being placed in the Ford cam shapers, because of the difference in the construction, and the difference in

operations of the two machines.'' Did you write that paragraph? A. I wrote it in collaboration with the counsel for the defendant.

Q. From whom did you get your information contained in that paragraph that the straightening operation was required before the shaft was put in the Melling cam lathe but not before being placed in the Ford cam shapers? A. Mr. Dalton Lee.

Q. What information did he give you? A. He stated the cam shaper required no straightening operations because shaper shaved metal off lengthwise.

Mr. Farley: Lengthwise?

A. Lengthwise. A straightening operation was required on the Melling cam lathe in order that cam-shafts revolve true. In other words, revolving motion. The straightening operation came before the turn cam lathe operation. The straightening operation continued until machines were no longer used. Joe H. Galbraith, without any prompting Mr. Galbraith stated that the straightening operation just before the turned cam lathe operation was installed at the time the **(156)** Melling cam lathes were installed, also that this operation was continued until the machines were scrapped.

* * * * *

(157) Q. (By Mr. Spohn): Now, then, Mr. Woehrle, were there any other individuals you interviewed with respect to the straightening operation? **(158)** A. Mr. Gus Schwartz, the straightening operation was required on new cam lathe because they could not get away without straightening. In other words, the scrap was greater when straightening operation was not used. A greater chance was taken on possibility of scrap when straightening operation was omitted. This chance was greater on the Melling cam lathe than on the old shaper. The old shaper held the cam shaft more firmly than the new Melling lathe, and consequently rather truer. The old shaper worked lengthwise, while the lathe works in a revolving position.

Q. Were there any other individuals with whom you discussed that question? A. Jay Gould, no straightening operation was required just before the cam shaping operation. Shapers would hold the shaft even. Those shafts

were not straight. New cam lathes required a straightening operation just before shafts were placed in lathes. Reason, crooked shafts would bend and break machine. Always had straightening operation subsequent to installation of lathes.

Q. And of course you have no independent knowledge on the fact of straightening other than as you discovered from your conferences with these four individuals? A. Just a moment, I may find a few more. Albert Aptekar, he was in the cam-shaft department from 1916 to 1931. Reason for straightening operation just before cam lathe operation; the shaft had to be straighter or truer because of the construction of the steady-rest, the old steady-rest for the shaper was short and on the solid base of the machine, there **(159)** were also three supports which steadied the cam-shaft while it was being tooled. The steady-rest for the cam lathe was longer and supported on one side of the machine. There was only one rest. This steady-rest would produce or permit greater vibration when the tools were cutting. Therefore, it was necessary to have the shaft straight in order to get a clean job. The old shaper would take the cam-shaft without being straightened because the construction of the machine would cut the cams in line with the bearing, even though the shaft was not absolutely straight (providing there was sufficient stock). Mr. Aptekar examined a Melling lathe located at Ford Highland Park, and also blue-prints of the old cam shaper, and re-stated the facts as set forth hereinbefore.

Q. Were those all the individuals with whom you talked as to the question of the straightening operation? A. I believe that is all.

Mr. Farley: Might I have a question there? How about Mr. Shawkey, didn't you discuss that with Shawkey, do you recall?

A. I don't recall now whether he gave me any light on that or not. If he did, we can always get it again.

Q. (By Mr. Spohn): In the use of that straightening operation in the accounting for minutes required on page 19, is based upon the information that you secured from the agents or employees of the Ford Motor Company? A. Except that from Exhibit 13 to Exhibit 14, there is no

mention of any straightening operation made in Exhibit 13, (160) whereas there is in Exhibit 14.

Q. As supplemented, that information then as supplemented by Exhibit 14? A. This testimony I obtain from the employees supplemented the information obtained from operation sheets Exhibit 13 and Exhibit 14.

* * * * *

(162) Q. (By Mr. Spohn): Now, Mr. Woehrle, will you refer again to schedule 1, sheet 1, of Exhibit "C," and the extraordinary repairs set forth there in the sum of $23,579.66, with a footnote, "C." That footnote is to the effect that expenditures were made in 1928, '29 and '30, on 14 Melling cam lathes. The necessity for overhauling resulted principally from the use of the machines on model "T" 410 production. Did you write that footnote, "C"? A. In collaboration with our partner, Mr. Russell, yes.

Q. And where did you receive the information to the effect that the necessity for overhauling resulted principally from the use of the machines on model "T" 410 production? A. From job orders.

Q. And from job orders only? A. Or work orders, as they are called, I guess.

(163) Q. Shop orders or work orders? A. Yes.

Q. Job orders? A. Yes.

Q. And you had no further conferences on this matter with anyone other than Mr. Russell? A. I am not positive just who I talked to, but I am quite sure I took the matter up with someone out at Ford's before I made the statement.

Q. You don't know of any note to that, do you? A. I don't think so, no.

Q. And you cannot recall now with whom you discussed it, if anyone? A. No, no, I cannot.

Q. Well, when you put that note on there you had Exhibit "A," or had at least read Exhibit "A," had you not? A. Yes.

Q. And is it possible that you secured the information for the writing of that note from Exhibit "A," page 5 paragraph 15 of Exhibit "A"? A. Those apparently are the same amounts that we have used in schedule 1, sheet 6 of Exhibit "C," only we have elaborated on those amounts giving the details setting forth just the overhauls made on these machines.

Q. Mr. Woehrle, before we get too far into this overhauling, in order to keep as close to your testimony on the straightening operation, will you take Exhibit "B" again and refer to item 23 on page 5, item 23 on page 5 of Exhibit "B"? Did you **(164)** write that paragraph? A. I wrote that, yes.

Q. And the information that you secured to write that paragraph 23 in Exhibit "B" was obtained from whom? A. Exhibit 14 in Exhibit "C."

Q. Was that the only source of information? A. Yes.

Q. Now, you still have Exhibit "B" there. Will you turn to item 34, Exhibit "B"? Did you write that paragraph, Mr. Woehrle? A. Maybe not word for word, but I think I wrote most of it.

Q. And the sources of your information with respect to that paragraph were what? A. Just a moment, please. Apparently it was taken from Exhibit 13.

Q. And the rest of it? A. The rest of what?

Q. The rest of the information, you say part of it was obtained from Exhibit 13.

Mr. Farley: He said "apparently taken."

Q. I beg your pardon, apparently taken, I beg your pardon. A. Apparently taken.

Q. Well, would your testimony be to the best of your knowledge it was taken from Exhibit 13? A. It was, yes.

* * * * *

(166) Q. (By Mr. Spohn, continuing) Now, with reference to this overhauling or extraordinary repairs set forth on Schedule 1, $22,579.66, that total is taken, is it not, from Schedule 1, sheet 6? A. It is.

Q. Do you have the original shop orders, or work orders? A. I do.

Q. May I see those, please?

(Documents produced by the witness and presented to Mr. Spohn.)

Mr. Spohn: I will ask the reporter to give an exhibit number for the purposes of identification to the work orders which you have just handed to me, totalling 14 in number.

(14 documents were thereupon marked Exhibits "P-1," to "P-14," respectively, by the reporter.)

Mr. Spohn: The shop orders on overhaulings have been marked "P-1" to "P-14."

Q. Mr. Woehrle, do you have any knowledge of the numbering of accounts used by the defendant company in its ordinary accounting records? A. Not absolutely, no.

Q. Would you know what account number 590 appearing on Exhibit "P-1" might be (handing document to witness)? A. No, I don't.

Mr. Spohn: Mr. Hovis, could you state what account No. 590, appearing on Exhibit P-1, might refer to.

Mr. Hovis: Yes, profit and loss.

Mr. Spohn: Profit and loss, is that 590?

Mr. Hovis: That is right.

(167) Q. (By Mr. Spohn) Mr. Woehrle, on Exhibit P-6, there appear two account numbers, 270 and 770. Would you know what those account numbers refer to? A. No, I don't.

Mr. Spohn: Would you know, Mr. Hovis?

Mr. Hovis: 270 represents construction in process, the control account for all work orders.

Mr. Spohn: And 770?

Mr. Hovis: And 770 represents salvage expense.

Q. (By Mr. Spohn) Mr. Woehrle, did you state you had photostats of these Exhibits, P-1 to P-14? A. Just the first sheets I think you will find.

Q. Just the first sheets? A. Yes, just the first sheets.

Mr. Spohn: Mr. Farley, may we take these and make our own copies of them? We think they may be material here. Or would you rather have photostats made?

Mr. Farley: I think I would rather have photostats made and supply them to you, because these are original records.

Mr. Spohn: We would appreciate that.

Q. (By Mr. Spohn) Mr. Woehrle, will you refer now to Schedule 1, sheet 6, and over to the right half of that schedule, "Explanation per work orders." Did you write that explanation? A. I don't remember if I wrote it personally or not, but I checked it over.

Q. Did the information come to you for that explanation from these various work orders, Exhibits P-1 to P-14? A. Yes, sir.

Q. Now, Schedule 1, Sheet 1, in your accounting you charge all of **(168)** this overhauling to expense, do you not? A. Yes.

Q. And charge it against the Melling cam lathes? A. That is right.

Q. In doing that, did you refer to Exhibit 8 of Exhibit "A," where part of this expense was charged to the "A" shaft production, Exhibit 8, page 3? In Exhibit "A," part of that overhauling cost is charged to the manufacture of the "A" shaft, is it not? A. Apparently, yes.

Q. And in your report it is all charged to the "T" shaft production? A. That is right.

Q. And, will you refer to Exhibit 8 again, attached to Exhibit "A," and that overhauling expense there is charged out on a depreciation basis, is it not? A. I don't know. I didn't prepare it.

Q. Can't you tell from looking at it? A. It doesn't say anything about depreciation there; just 12½ percent. That could mean that they figured the overhaul would be one every eight years. It wouldn't have to be depreciation.

Q. So, you don't know whether that was done on a depreciation basis or not, of your own information? A. No, I didn't prepare it.

Q. You charged it out just as expense? A. That is right.

Q. And all to the "T" shaft production? A. That is right.

Q. Now, from your review of these shop orders, or work orders, Exhibits P-1 to P-14, inclusive, did you notice that on some of **(169)** them the overhaul was to prepare for operation 13, turn cams on A-6250 camshaft? A. Yes, sir.

Q. Did you make any investigations as to what that language meant on the work shop order? A. No, I think it is self-explanatory.

Q. You made no examination? A. Those persons writing those evidently—at least, I didn't find the original writer of these work orders.

Q. So, you had no discussion with whoever did it? A. Had no discussion.

Q. Is it true that those work orders, total cost on the several work orders, includes moving from plant to plant? Take the first one, 31,472, work order R-26501; "Move from K-7 motor building to B-58 foundry." A. That is moving it from the motor building to the place where they made the overhaul repairs on it. In other words, they had to move it over there to make the repairs.

Q. Is B-58 the foundry? Is that where they made repairs, do you know? A. That is what it says.

Q. You have no information as to the nature of the work performed on these Melling cam lathes when overhauled, other than is disclosed from the work orders themselves, do you? A. I can't remember now whether I talked to anybody else about it or not. But, to me—

Q. (Interposing) Would the fact these 14 Melling lathes were overhauled in late 1928 and in 1929, and one in 1930, at about the time new lathes of the same type were being bought, might **(170)** that indicate there were additions or betterments being put on these machines? A. No.

Q. It wouldn't necessarily, in your opinion? A. No.

Q. Do you have any knowledge as to whether there were any additions or betterments put on these 14 Melling lathes overhauled on the date set forth in Schedule 1, Sheet 6, to make them conform to the purchases of Melling cam lathes by the defendant within the months of January, March and April of 1929, as set forth in Item 2 of Exhibit B? A. I do not.

Q. You do not have any information? A. No.

Q. Now, will you refer again to Sheet 1 of Schedule 1, extraordinary repairs, footnote B, which is in the following language: "The records for the Ford cam shapers for the period in which these machines were used indicate only three instances of extraordinary repairs and overhauling. The amounts expended are not available." Did you write that paragraph? A. I did.

Q. What, therefore, did you have reference to when you say the records indicate only three instances of extraordinary repairs that the expenses are not available? A. The permanent inventory of the tools, and machinery.

Q. Do you have the records of those three instances with you? A. They are in those records which you obtained last night, and I think you have returned them now. I have the records.

Q. And those records you now present, being permanent inventory of **(171)** machine tools, and the first of those instances is on a permanent inventory machine tool card, No. 10,706, which I am asking the reporter to identify.

(The document above referred to was thereupon marked Exhibit "Q.")

Mr. Spohn: And, I will ask to have marked the permanent inventory of machine tool card, No. 11,628, identified as Exhibit "R."

(The document above referred to was thereupon marked Exhibit "R," by the reporter.)

Mr. Spohn: And, permanent inventory of machine tool card, No. 12,205, identified as Exhibit "S."

(The document above referred to was thereupon marked Exhibit "S" by the reporter.)

Q. Mr. Woehrle, will you now turn to page 21 of Exhibit C, and the last paragraph on that page, which reads as follows: "Ford cam shapers were overhauled by the maintenance men on the average of one machine per month, or approximately every machine once a year. The Melling cam lathes were cleaned and freed of chips on the average of one machine every day, or about twice a month for each machine." Did you write that paragraph? A. That is one machine each day.

Q. That is one machine each day. A. Yes, I did.

Q. What information did you have when you wrote that paragraph concerning the overhauling of the Ford cam shapers?

Mr. Farley: I don't want to be unnecessarily objecting, Mr. Spohn, but I believe we went all over that once. He testified where he got that information. But, if you want to repeat **(172)** it, I have no objection.

Mr. Spohn: I don't have any distinct remembrance of that, your Honor, please. I would like to cover it now, and it will be later stricken if it has been covered before.

The Master: Go ahead. It doesn't need to be stricken then unless it is too repetitious.

A. I obtained that directly from the testimony of a man in the shop. Perhaps, when I start reading their names you will recall the incidents. I think counsel for the plaintiff is correct. I don't think we have covered this.

Mr. John Smith. Mr. John Smith made the statement that two men were used on each of the two shifts to maintain the cam shapers, while four men were required to maintain the cam lathes on two shifts. He further stated Mr. Buckmann was the regular maintenance man on the old shapers, and he had one helper. I also refer to Mr. Buckmann's testimony.

Mr. Farley: Might I suggest that you change "that testimony" to "statement."

A. Yes, statement of Mr. Buckmann. Mr. Buckmann was the regular maintenance man on the cam shapers. He had a helper he called Frenchy, and there were two maintenance men on the day shifts, and one on the night shifts. When the shapers were replaced by lathes, it took four maintenance men on each day shift, and one maintenance man on the night shift. Mr. Buckmann was on the maintenance crew only a short time after the installation of the Melling cam lathes. Mr. Henry Pillinger.

Mr. Pillinger states there were four men in the maintenance crew to keep the Melling lathes in operation; Mr. Pillinger and three others on one shift, and four others on another shift. For **(173)** the midnight shift only one man was required.

Mr. Pillinger gave the names of the following men who were on the maintenance crews. Robert McGregor, a man whose last name is Alvers, Alex Kennedy, Frank Chapman, Frank McKinnie, Mr. James Ferris.

Mr. Ferris stated four men worked on each shift on the Melling lathes. He said one shift was made up of himself, Emmry, Allan, and Craig. Allan was later replaced by Hocking.

Another shift included Alvers, Kennedy, and Chapman.

Still another shift included McGregor, Harding and Livingston.

He further made the statement that these men were shifted about from time to time so that at different times

different men were on different shifts. I believe that is all.

Q. Did you have any other information concerning overhauling, aside from the information you have just read to us? A. This is normal overhauling. Now, we have, understand, extraordinary overhauling which is covered by those work orders.

Q. Is this what you call a normal overhauling? A. This is normal overhauling.

Q. The testimony you have given with respect to page 21, the last paragraph on that page, does that, likewise apply to the paragraph beginning on page 26 of Exhibit C? It is in the exact language, or very nearly exact? A. It is the very same language, isn't it?

Q. The same testimony would apply to that paragraph, too? A. Yes.

Q. You wrote that paragraph beginning at the top of page 26, line 4? **(174)** A. I did.

Q. Now, with respect to your account being for profits, gains and advantages set forth on Schedule 1, Sheet 1, did you read the testimony taken in this matter on the trial of this case before Judge Tuttle? A. No, I didn't.

Q. None of it? A. No.

Q. Will you turn to Schedule 2 of Exhibit C, sheet 1, page 8. You have found that schedule? A. Yes, page 8.

Q. Is that accounting there set forth on that schedule with reference to comparative costs of certain operations in machine Model A, 6250 camshafts based on the use of Ford cam shapers to machine those "A" shafts? A. It is.

Q. Now, on Exhibit C, in connection with the Schedule 2, will you turn to page 18, paragraph 2-B. That paragraph 2-B reads as follows: "In preparing Schedule 2, defendant had computed the cost of machining the cams of the Model A, 6250 camshafts on Ford cam shapers of the type regularly used by defendant in its plant for machining model T-410 camshafts." Did you write that paragraph? A. I did, in collaboration with counsel for the defendant.

Q. And from whom did you obtain the information that the model "A" could have been machined on the Ford cam shapers? A. Mr. Pioch.

Q. Where does he live, do you know? A. I don't know where he lives.

(175) Q. Is he an employee of the Ford Motor Company? A. He is.

Q. Do you have any notes as to your conversation with him? A. Yes.

Q. Just a moment. I will withdraw that question.

• • • • •

(184) RE-DIRECT EXAMINATION by Mr. Farley.

Q. Mr. Woehrle, in view of the very extended examination of Mr. Spohn on the matter of overhead, would you please state, referring to page 19, of Exhibit C, and the fact as I recall (185) your testimony, you stated it might be correct to figure overhead on the basis of direct labor, if you had figured overhead on that basis, would it have affected the net results of your computation as contained on sheet 2 of Exhibit C, and if so, how would it have affected it? A. Well, if we used direct labor, and referring to page 19 of Exhibit C, we have 3½ minutes of time consumed under the Ford cam shaper method, and we have 3.66 minutes consumed under the Melling cam lathe. Naturally, if we applied an overhead based on labor it would be to the advantage of the defendant to use such a computation.

Q. Now, when you prepared these computations, also in view of the many questions asked you concerning your experience in cost accounting, did you check over your entire method of computation that you used with anyone having experience in cost accounting? A. I did, sir.

Q. And, with whom? A. Our resident partner, Mr. Donald M. Russell.

Q. Does Mr. Russell have any particular experience in cost accounting, as far as you know? A. He is one of our experienced cost accounting men in our firm. He is at present the president of the local chapter of the National Association of Cost Accountants here in Detroit.

Q. Now, I have here your own office copy of your Exhibit C, and I call your attention to the stamp appearing on the first page, signed by— A. "D. M. R." and approved by "D. M. R." Those are Mr. Russell's (186) own initials, signed by Mr. Russell.

• • • • •

Q. Now, you were asked some questions to the general effect as to whether or not you had included any cost for tools in your computations in view of the cost for tools that was set up in Exhibit B, which was not prepared by you. I would like you to explain just why it was you did not include any tool cost in your computations.

Mr. Spohn: Exhibit "A."

Mr. Farley: Exhibit "A," pardon me.

(187) A. I considered that tool cost there computed in Exhibit A based in part on estimates; whereas, my computations are based upon information obtained from records or employees in the Ford Motor Company.

Q. With respect to the cards which were attached to Exhibit A, showing costs of blades, did you make any check in so far as those cards were concerned to determine whether or not they correctly reflected the number of tools that had been bought over any period of time? A. I checked with the Purchasing Department to try to determine or obtain records of purchases of tools during the infringing period. I was informed that no such records were available other than the record there exhibited, and furthermore—

Q. (Interposing): That is Exhibit 10? A. And, furthermore, that those cards there represent, perhaps, only a portion of the purchases, and they do not purport to represent all of the purchases of those types of tools.

Q. And it was your opinion, was it, that the tabulation as prepared and filed in Exhibit A with respect to tool cost was too speculative for you to take those figures into consideration? A. That is right.

Q. I am going to ask you if, in addition to the operation sheets and other records you considered, did you consider any other ones which you have not heretofore mentioned in your testimony; that is, I mean by that, any standard set of investigations concerning the production of machines? **(188)** A. There is a report which was prepared by an engineer by the name of Payne who made a study of the Melling cam lathes for a ten-weeks' period in 1924, which shows that the operations of the Melling cam lathes produced an average of, I think it is 71 shafts per man, operating two machines.

Q. And how do those figures compare with the ones you used in your computations? A. In my computations

I have used from the basis of Exhibit 14, 70 shafts per hour per man, which would give 35 per hour per machine. Therefore, they compare very closely.

Q. Do you have those reports of Mr. Payne in your possession? A. The originals are located in the file in the Administration Building at Ford Motor Company.

Q. I am going to produce photostatic copies and show them to you, and ask you if you know what they are (handing documents to witness)? A. These appear to be photostatic copies of the ten-weeks' report prepared by Mr. Payne, and was a summary of these reports showing the computation of the number of hours the machines operated, the number of pieces produced, and the pieces per hour.

Q. I am going to ask that that group of photostats be marked for identification, "W-1" to "W-14."

(The documents above-referred to were thereupon marked "Exhibits W-1 to W-14," respectively, by the reporter.)

Mr. Farley: We will produce the originals for your benefit, Mr. Spohn.

(189) Mr. Spohn: All right.

Q. (By Mr. Farley): Have you given any particular consideration to these reports which, for convenience, I will refer to as the Payne reports? Have you given any particular study to them with respect to the times were shut down for repairs? A. I merely made a cursory examination of them and know what they purport to include.

Q. Would you say whether or not, or do you feel you are sufficiently acquainted with it, to state whether or not the Payne reports tend to confirm or contradict the statements made to you by the various Ford employees you interviewed concerning the number of maintenance men that might be required? A. It confirms—

Mr. Spohn (Interposing): Just a minute, I object to that and ask to have the answer stricken as a conclusion. The reports speak for themselves.

Mr. Farley: The witness is here to give expert testimony, and it seems to me that he is entitled to draw conclusions.

The Master: I think virtually all of the witness' testimony is opinion testimony. Obviously, he hasn't testified directly as to the facts, except from his inspection of these records and his report here largely consists of conclusions from methods and other information which he secured. It seems to me that the question is proper, and I overrule the objection. Read the question back.

(190) (The last question was read by the reporter.)

The Master: First state whether you are sufficiently qualified to state; if you studied the Payne reports sufficiently so that you can make such a statement.

A. I have studied the Payne reports sufficiently, and I will add that that report confirms the number of maintenance men required to keep those machines in running operation.

Q. Just on that subject of maintenance men, I think you used the term "running over-hauls" that the maintenance men were accustomed to perform. Isn't the usual term for men who are in a department taking care of running repairs, isn't it usually called maintenance repairs rather than over-haul? A. Maintenance repairs; that is right.

Q. May I see your statement from your interview with Mr. Pioch? A. Offhand, I am not familiar where that is filed.

Mr. Farley: Well, we will drop that in view of the fact Mr. Spohn withdrew his question on that. It probably wouldn't be proper for me to bring it up. I think that is all, Mr. Spohn.

RE-CROSS EXAMINATION by Mr. Spohn.

Q. With respect to Exhibits W-1 to W-14, inclusive, the Payne report, that study purports to have been made over a ten-week period in 1924; that is correct, is it not? A. Yes, sir.

Q. That is outside the accounting period here involved. Who is Mr. Payne, do you know? **(191)** A. He was a man in the engineering department, no longer in the Ford employ.

Q. Do you know what his first name was? A. No, I don't.

Q. Can you advise us, Mr.— A. (Interposing): On page 4 his initials are H. E. Payne, Engineer.

Q. You say he is no longer with the Ford Motor Company? A. No.

Q. Do you know whether he is alive now, or not? A. I do not.

Q. When did you first see this Exhibit W? A. November, 1937.

Q. What part of November, 1937? A. I don't remember now just when it was called to my attention, but it was in November. I made most of my examination in November.

Q. Did you see this report prior to discovery or finding of Exhibit 14 attached to Exhibit C? A. I wouldn't know, sir. This information is gathered over a period of several weeks, and I just didn't make my computations until after I had assembled enough material to get somewhere with it.

Q. Well, your own time record shows you the order in which you examined Exhibits W-1 to W-14, and Exhibit 14 attached to Exhibit C? A. No, they would not.

Q. Now, the fact you were unable to discover record evidence with reference to small cutting tool expense on the cam **(192)** lathes, Ford cam shapers, and also with respect to the Melling machines, it doesn't mean that expense should be ignored, does it, if it can be found any other way? A. If it can be found any other way, it should be included.

Q. Obviously, where the differential is 9 to 1 in favor of the Melling machine against the cam shaper with respect to cutting tools, that item will be material, may it not? A. Where do you arrive at 9 to 1?

Q. Assuming it is 9 to 1 advantage. A. How do you arrive at that?

Q. Never mind how I arrive at that. Assume it is 9 to 1 advantage on cost. A. I don't get the point.

The Master: Will you re-phrase your whole question?

Q. Assuming the cost of cutting tools for cam shafts manufactured, or the cam shaper, is nine times as much as

the cutting tool expense on the Melling machines, then that item should be considered in any accounting for profits, gains, and advantages of the defendant, should it not? A. If the amounts can be determined. Likewise, if it is 1 to 9, the other way, we should include it also.

Mr. Spohn: That is all for the present.

RE-DIRECT EXAMINATION by Mr. Farley.

Q. Of course the length or life of the tool naturally would have a great bearing on the subject, too, would it not? A. Yes, sir.

Mr. Farley: That is all.

* * * * *

---

(194) FRED M. HOVIS was thereupon recalled as a witness, having been previously duly sworn, testified further as follows:

CROSS EXAMINATION by Mr. Spohn.

* * * * *

(198) Mr. Spohn: The notice to produce, Paragraph Two: "Ratios of burden to labor by months throughout the accounting period of the department or departments in which F-446 camshafts were ground prior to February, 1924."

Mr. Farley's reply to that Paragraph Two: "The only records available which show the ratios of burden to labor for Department 105, in which the F-446 camshafts were made are shown by the cost summary cards for the F-446 camshaft which we sent to Mr. Michael with our letter of the 3rd."

Mr. Farley, those are the cost summary cards which have just been identified as Exhibits F-11, F-12 and F-13?

Mr. Farley: That is right.

* * * * *

(200) Paragraph Seven of the notice to produce: "Statements by months throughout the accounting period showing in dollars and cents the labor cost and burden for the department or departments in which

T-410, A-6250 and F-446 camshafts were made by the defendant on the infringing machines."

Reply of Mr. Farley. "Paragraph Seven: Mr. Woehrle now has in course of preparation statements by months throughout the accounting period of the labor cost and burden as requested in Paragraph numbered seven. I am advised that there will be some periods of time during which the labor cost and burden were not figured for the separate departments. As to these periods, the best we can do is to follow the regular practice of the Ford Company and calculate for those months where labor and burden costs were not figured, the labor **(201)** cost and burden in dollars and cents by employing the burden rate for the period when it was last available. We note that Mr. Watts is requesting the labor cost and burden for the department or departments in which the camshafts were made by the use of the Walcott machines. It would be practically impossible to compute these figures for certain months where the records we have discovered do not give the figures for the complete department. A large number of parts were made in the same department, and it would involve searching for and locating cost summary cards for all the parts made in the department to get the total cost and burden figures for the entire department. We find upon checking matters that where the burden rate for the entire department is shown by available records, that the available camshaft cost summary cards for the same months show that exactly the same burden rate as established by the figures for the entire department was employed in figuring camshaft costs."

* * * * *

(205) HAROLD M. WOEHRLE was thereupon recalled as a witness, having been previously duly sworn, testified further as follows:

CROSS EXAMINATION by Mr. Spohn.

* * * * *

(206) Mr. Spohn: Will you mark these, please.

(Whereupon, three documents were marked Exhibits "X-1," "X-2" and "X-3," respectively, by the Reporter.)

Q. Mr. Woehrle, these three typewritten sheets of paper which you have handed to me, which have been identified tentatively as Exhibits X-1, X-2 and X-3, they are the computation of burden made by you for the period involved in this accounting? A. They are; for the periods given.

Q. As set forth in the exhibit? A. As set forth in the exhibit; that is right.

Q. And, it is your understanding, Mr. Woehrle, that the A-6250 shaft was machined in Department 410? A. Yes, sir.

Q. Now, referring to Exhibit X-3, Department 105, your understanding is that that is the department in which the tractor camshaft was machined? A. Yes, sir.

Q. And Department 102, the camshaft was also machined in that department? A. Yes, sir.

Q. What is Department 106? A. I don't know. Perhaps Mr. Hovis can tell us?

Mr. Hovis: I don't remember exactly, either, but it is more or less of a machining department, also; additional machining operations.

Q. Is this a fact, that the tractor camshafts were sometimes **(207)** machined in Department 106?

Mr. Hovis: There may be certain operations, maybe heat treats; something like that. But, the machining operations that would involve the question here would be in 102 and 105.

Q. Do you know, Mr. Woehrle, what the significance is of the statement, Departments 102, 105 and 106 combined? A. It appears from the records which I found that the persons who made up these burden amounts and labor amounts

combined all three departments. Whether for convenience or what, I don't know.

Q. Into one summary? A. Into one summary figure.

Q. And it was from that summary you worked in preparing this Exhibit X-3? A. That is right.

Q. And the same burden rate, then, was computed for all three of them on a combined basis; is that right? A. That is right.

Q. Now, Mr. Woehrle, will you state for the purposes of the record here how you arrived at this computation set forth on Exhibits X-1, X-2 and X-3? A. I made no computations; they are merely amounts copied from records which I obtained in the Ford Motor Company files.

Q. And were those records the cost summary cards that have been identified? A. They were not.

(208) Q. They were not. What were those records that you used? I mean, just describe the records you used. A. They were bound sheets of paper, bound in fiber covers and marked on the outside cover "Burden Rates" and "Burden Computations." I have them here in the Court Room.

Q. May I see them.

(Above-described documents were thereupon produced by the witness.)

Mr. Spohn: Will you mark these, please.

(Whereupon, three sets of bound documents were marked Exhibits "X-4," "X-5" and "X-6," respectively, by the Reporter.)

Q. Now, this bound record which you handed me, and which has on the outside of it, "Tractor Overhead," and has been identified as Exhibit X-4, and the two bound books which you have handed me, which have been marked for identification as Exhibits X-5 and X-6, the latter two being motor assembly overhead; that is correct, isn't it? A. Yes, sir.

Q. Now, with respect to Exhibits X-4, X-5 and X-6, your testimony is that it was from those exhibits that you compiled the overhead data which is set forth in Exhibits X-1, X-2 and X-3? A. It is.

Q. Did you just copy that data on Exhibits X-1, X-2 and X-3 from X-4, X-5 and X-6? A. Yes, sir.

Q. Did you make any investigation as to whether the overhead figures set forth in Exhibits X-4, X-5 and X-6 was the same **(209)** as that on the cost summary cards in evidence, F-1 to F-13? A. Yes, sir.

Q. Do you know it did? You made such an examination? A. I did.

Q. Did it check with that overhead? A. In the majority of cases it did.

Q. In the majority of cases. Do you know of your own knowledge whether Exhibits X-4, X-5 and X-6 are the exhibits from which the overhead percentages set forth on the cost summary cards are taken? A. I was told those were the records that they used in preparing the cost summary cards.

Q. In preparing the cost summary cards? A. That is right.

Q. In other words, Exhibits X-4, X-5 and X-6 are the records from which, as far as you know, the burden percentage set forth on the cost summary cards, Exhibit F-1 to F-13 were taken? A. In cases where they agreed; yes.

Q. In cases where they agreed? A. That is right.

Q. Did you make any investigation as to those cases in which they didn't agree? A. I was told by members of the department in cases where the burden rates as figured appeared too high for some reason or other, adjustments were sometimes made to bring the burden rate into line with the approximate average that had been in practice in prior periods.

(210) Q. And that recomputed figure was the figure that was extended in the cost summary cards, Exhibits F-1 to F-13, as the case may be? A. Yes, sir.

Q. Mr. Woehrle, referring now to Exhibit X-3, you will note that there is a percentage in two instances enclosed within a parenthesis; the first is for the month of March of 1926 having in parenthesis "used 150 pct.," and for the month of March, 1928, in parenthesis there "used 176 pct."; do you know what the meaning of those terms in the parentheses are? A. I believe they mean that while the first amounts in column three are the amounts, the overhead percentages which are computed from the productive labor and overhead amounts, it is apparent from this

parenthetical phrase that the amount in this last column, or the margin, were the amounts they actually used in figuring cost.

Q. Am I to understand in this last column on Exhibit X-3 all the percentages of overhead are as there stated, except in two instances a lower percentage was used, and that lower percentage is in the parenthesis? A. I wouldn't want to say absolutely without re-checking it.

Q. Is that your understanding of it? A. It is my understanding, but I wouldn't be too sure of that.

* * * * *

(245) Mr. Spohn: Mr. Farley, do you have the originals of your machine inventory cards for the Walcott machines?

The Witness: You mean the permanent inventory records?

Mr. Spohn: Yes.

The Witness: No, I returned those to the file. I had them here the last time and returned them to the file.

Mr. Spohn: Have you photostats of them?

Mr. Farley: Have you photostats of them?

The Witness: Yes, sir (producing documents).

Mr. Spohn: Will you mark these, please, Mr. Reporter?

(24 documents were thereupon marked Exhibits Y-1 to Y-24, respectively.)

Mr. Spohn: A permanent inventory of machine tool cards have been marked for identification Y-1 to Y-24, inclusive.

* * * * *

(257) Cross Examination by Mr. Farley.

Q. Mr. Woehrle, I was glancing over the transcript the other day, but I don't have the spot right here; it seems to me you were asked by Mr. Spohn in the last hearing to prepare a tabulation on the overhead during the various periods we have examined into, the various periods of time, such figures as you had available—I mean by that, the percentage overhead. Did you make any such computation? A. I have prepared computations of burden, and I have had them **(258)** typed up and they are available here.

Q. I wish you would produce those, please. A. (Documents were produced by the witness.)

Mr. Farley: I don't know whether you had forgotten this or not, Mr. Spohn.

Mr. Spohn: My memory of the transcript is that the demand was made on Mr. Hovis.

Mr. Farley: Maybe it was. I know it was made on someone.

Mr. Spohn: I know your letter refers to Mr. Hovis concerning that data.

The Witness: I think you are right; I think Mr. Hovis was requested.

Q. These are Mr. Hovis' records, then, is that right? A. Indirectly.

Mr. Farley: I don't know whether you want to have this marked as an exhibit for identification or not.

Mr. Spohn: It is your exhibit, if you want to have it marked for identification without offering it at the present time we have no objection.

Mr. Farley: All right, we will mark it. Is it your scheme, Mr. Quaife, that we use numbers, say, for the defendant, and letters for the plaintiff, or what? I don't know where we stand on that right now, to tell the truth.

(A short discussion was had off the record.)

(The document above referred to was thereupon marked Defendant's Exhibit 200.)

Q. In general, Mr. Woehrle, this covers the period from what **(259)** dates to what dates, will you please state? A. The periods covered are for the Model T camshaft, beginning June 16, 1925, and ending January 15, 1929, and the period covered by the Model A is from November, 1927, to February 3, 1931.

Q. For the purpose of clarity of the record, suppose you just mark the sheets 1, 2 and 3, and then refer to which sheet you are talking about?

The Witness: I think it would be better to number the computation on the Model T-410 as page 1.

(The document above referred to was thereupon marked as page 1 of Defendant's Exhibit 200.)

* * * * *

(261) Q. Assume you had used the available figures and the available system or usual system at the Ford Motor Company in computing overhead, and you had in your schedules, Exhibit "C," used overhead figures as they were available to you from the Ford Company records, how would they have affected the final figures you got showing a loss to the Ford Company? A. It is apparent from Exhibit No. 200—page 1 that the burden amount total computed on the Ford cam shapers totalled $203,655.96 for the three operations taken into consideration, whereas the same type of computation for the Melling cam lathes produced an overhead total of $212,965.96, or an additional loss **(262)** amounting to $9,310.00. And, continuing with the policy used by the Ford Motor Company, where burden percentages were not available, I was informed when cost or overhead percentages were not computed for a month if the overhead percentage was desired for that month the earliest or the prior month, or the earliest prior month available would be used in determining the cost.

* * * * *

(269) Mr. Spohn: If your Honor please, just one moment. If your Honor please, with respect to the former motion I made on Defendant's Exhibit 200 and withdrew with respect to your Honor's ruling, I would like to call your Honor's attention to the request made by us in the prior examination, on page 100 of the transcript; Mr. Hovis is on the stand.

Mr. Farley: What page?

Mr. Spohn: Page 100, near the bottom of the page:

"Q. Now, can you give us the other burden figure for years other than 1925 comparable to this 157 per cent? A. Yes, they could be arrived at by taking any of these cost cards, by taking the total burden and the total direct labor and making a division and arriving at the average per cent.

"Q. For each of the years 1925 to 1931? A. That is right.

"Q. Have you made any such computation? A. No, I have not.

"Q. The data is available to make such computation? A. Yes, sir.

"Q. Will you make such computation? A. Surely.

(270) "Q. (Beginning on page 101) And will counsel please present that computation?"

We there requested overhead from each of the years 1925 to 1931. As I understood it, Exhibits X-1, X-2 and X-3 make such computations. They are not any such computation as set forth in Exhibit 200, pages 1, 2 and 3. I move to strike the testimony.

Mr. Farley: I am afraid we have a difference of opinion there. Mr. Hovis was testifying about a percentage, 157. The Exhibits X-1, X-2 and X-3 don't give percentage figures, and the Exhibit 200, which we produced, does give the percentage figure. That is exactly what you asked for.

Mr. Spohn: Page 100, read it again. I will read it:

"Q. Now, can you give us the other burden figure for years other than 1925 comparable to this 157 per cent? A. Yes, they could be arrived at by taking any of these cost cards, by taking the total burden and the total direct labor and making a division and arriving at the average per cent."

That is exactly what you do on Exhibit X-1, take the productive labor and the overhead and divide them to get a per cent.

The Master: Mr. Farley, don't Exhibits X-1, X-2 and X-3 give everything that is requested, except the final per cent which is a simple mathematical computation?

Mr. Farley: I don't think they do, your Honor **(271)** please, because the request was for each of the months from 1925 to 1931. There are some of the months missing in X-1, X-2 and X-3, and the percentages are not given comparable to the 157 per cent. We produced exactly what record Mr. Spohn was asking for.

Mr. Spohn: We don't want to quibble, but we made a demand for figures and we have them, X-1, X-2 and X-3, and they are sufficient for the purposes of our demand. The percentages are calculable the same as any other percentages. Exhibit 200 does not meet our demands; it is part of the defendant's case.

The Master: I wonder if that isn't so. On further reflection it does seem to me that that is probably so. As I understand it, the purpose of the hearings that have been had so far in this case is to elicit information desired by the plaintiffs preliminary to bringing their case in full, and not to give the defendants an opportunity at this time to put in their case. I am wondering if this Exhibit 200 doesn't really go beyond the purpose of these hearings, and isn't actually an affirmative part of the defendant's case.

Mr. Farley: I can very readily appreciate, as far as Mr. Spohn is concerned, those figures are not any figures he wants to see at all.

Mr. Spohn: Now, on the contrary, Mr. Farley, I am not worried about the figures.

Mr. Farley: I don't care whether they go in now or not.

Mr. Spohn: I wanted it understood, your Honor, (272) these figures are not in request to any demand of ours.

The Master: If that is understood, then we may have them in the record now without the necessity of having a re-examination later.

Mr. Spohn: I have no objection, your Honor, to have the exhibit identified as Exhibit 200, but I do move that the testimony of the witness be stricken. I do not at this time wish to cross-examine this witness with respect to those figures. It is no part of our present proceedings.

The Master: I will strike the testimony except as it relates to the identification of the exhibit itself without prejudice to its being put in at a later time.

* * * * *

(275) Norman R. Scovill was thereupon called as a witness on behalf of the Defendant, and having been first duly sworn, testified as follows:

Direct Examination by Mr. Farley.

(276) Q. Will you please state your name, residence and occupation, Mr. Scovill? A. Norman R. Scovill; Systems and Method; 5003 Fernwood Avenue, Detroit.

Q. You said "Systems and Method." A. Yes.

Q. That is in answer to the question "Your occupation"? A. Yes, sir.

Q. Just what do you mean by that, Mr. Scovill? A. Well, we have—

Q. (Interposing): Let me ask you first by whom are you employed? A. Ford Motor.

Q. How long have you been employed by the Ford Motor Company? A. Going on 21 years.

Q. What is the nature of your duties at the Ford Motor Company? A. The passing on all stationery, printed stationery forms, watching the system, approving the purchase of the forms, and perhaps along the line of efficiency.

Q. In connection with your duties at the Ford Motor Company have you had anything to do with inventory systems there? A. I have dealt with the inventory since 1919.

* * * * *

Cross Examination by Mr. Spohn.

(294) Q. What else do you do with respect to the inventory? A. Why, of course—I might have to bring out the whole story if that is what you question.

Q. Do you have anything to do with pricing? A. Oh, yes. The entire summarization of the inventory comes under my supervision.

Q. When you say "summarization," do you mean the adding together of all the figures? A. It means the pricing, extending, verification.

Q. Where do you get the prices you use? A. We arrive at those prices from the Form 3566 cost card.

Q. Do you have anything to do with the preparation of 3511? A. No, sir.

Q. So that you take that card and then use that in the pricing of the inventory? A. Indirectly we use a list from that card.

Q. A list made up from that card? A. Yes, sir.

* * * * *

(44) Todd L. Moise was thereupon called as a witness on behalf of the Plaintiff herein, and having been first duly sworn, testified as follows:

Direct Examination by Mr. Spohn.

Q. Your name is Todd L. Moise? A. Yes.

Q. Where do you reside, Mr. Moise? A. In Elyria, Ohio.

Q. What is your occupation? A. Certified Public Accountant under the laws of Ohio.

Q. And what is your age? A. 61.

Q. Are you operating as an individual, or do you operate with some firm? A. I am the senior member of the firm of Moise & Burgess.

Q. Where does your firm have its office? A. The principal office in Elyria, and another office in Cleveland.

Q. That is, your firm is a partnership or corporation? A. Partnership.

Q. What is the character of business of your firm? A. Most of our work in cost and financial analysis, supervisory service throughout the year on cost matters, supervision and **(45)** installation of cost accounting besides the normal auditing work most certified public accountants do. Our work has largely to do with manufacturing companies.

Q. How long have you been in the accounting practice, Mr. Moise? A. Independent public accounting since 1922.

Q. And you stated you are a certified public accountant under the laws of the State of Ohio? A. Yes, sir.

Q. Are you a member of the American Institution of Accountants? A. Yes, and of the Ohio Society of Certified Public Accountants.

Q. Are you licensed to practice as a certified public accountant before the Treasury Department? A. Yes.

Q. Are you licensed to practice as a certified public accountant before the United States Board of Tax Appeals? A. Yes.

Q. You state you have manufacturing clients, do you? A. Quite a number.

Q. You do accounting work for them? A. Accounting work and cost work.

Q. And do you do accounting and cost work for any clients that manufacture automobile parts? A. Quite a number.

Q. You say you install cost records? A. Yes.

Q. And have what you call continuous cost service? A. Yes, sir.

Q. Explain to the Court what you mean by continuous cost service for your clients. **(46)** A. Well, the auditing of records, which is the primary work of a firm of certified public accountants, consists of preparing statements of the condition as of a certain date, and of operation over a certain period from the books adjusted by verifications or checks. But, the continuous service in cost and financial work means that you devise improvements to cost systems already in vogue, help train the personnel of the cost departments, generally attend directors' and executive meetings, and keep in touch with the affairs of the company and advise them on the things that come within the accountant's province. That is the principal part of the work and special part of the work of our firm which I handle myself.

Q. And, you state you specialize in cost work? A. Yes, sir.

Q. Have you examined defendant's statement of account? A. Yes.

Q. And have you examined the defendant's amended statement of account? A. I have.

Q. Have you examined the defendant's further statement of account? A. I have.

Q. Have you read the testimony of Messrs. Wibel, Martin and Herklotz as set forth in the printed record of this matter on appeal? A. I have, in full.

Q. Were you present before the Master in this matter during the days of March 17 and 18, and the days of June 1 and 2 when plaintiff's counsel was cross examining certain of defendant's **(47)** witnesses? A. I was, excepting for a portion—for the afternoon of June 2, and I have read the testimony advanced, the transcript of the testimony at that session.

Q. Now, have you examined all of the documents, papers, marked for identification as Plaintiff's Exhibits D to Y, inclusive, and Defendant's documents, papers and reports marked for identification as Defendant's Exhibits 200, 201 and 202 in this matter? A. I have.

Q. Have you made a computation of the profits, gains, savings and advantages, if any, received by the defend-

ant company for the period between June 16, 1925, and February 3, 1931? A. Yes, and I have them with me. The one marked in the corner is the original and the rest of them are carbon copies (producing documents above-referred to).

Q. Has this computation been reduced to report form? A. They have.

Q. And this report which you have now handed me is your report of such computation? A. It is.

* * * * *

(57) Q. On columns 2 and 3 of page 5 there is entitled, "Burden cost per shaft," and under the title column 3, a sub-title "Melling cam lathes," and column 2 a sub-title "Ford cam shapers," and "Landis grinders." From what sources did you derive the data upon which you computed these burden figures set forth in the second and third columns, page 5, of your report? A. That burden data is that furnished by the defendant by way of cost summary cards, and the letter of defendant's counsel read into the record on June 1, 1938, and Exhibits X-1, X-2 and X-3. I used this data prepared by the defendant, and my burden computations are set forth on pages 7, 8 and 9 of this report. On that I have used the figures presented in the letter referred to in these exhibits, excepting where it was not available, which applies to 1925, and for that I have used the cost summary cards presented by defendant covering those months.

Q. Your burden computation is an annual computation, is it not? A. It is.

Q. Why didn't you make a monthly computation? A. Because the data is not available for all months, and, generally speaking, burden is an overhead, is a matter of a fixed accounting period for a year. Because I have been compelled to use the fragmentary data which did not cover all months, and which eliminate almost all of the low production months, I have every reason to believe that the ratios used are extremely conservative because they are always increased on an annual basis because of more or less idle months, but **(58)** they were not available in most instances, so we used the ones that were, and used that for the entire year. It would be impossible to do it monthly when you haven't complete monthly data.

Q. Referring again to page 5 of your report, columns 4 and 5 are entitled "Total burden cost," and column 5 under the title is the sub-title "Melling cam lathes," and column 4 is the sub-title, "Ford cam shapers," and "Landis grinders." How did you compute the total burden cost used in these columns? A. By multiplying the production shown in the first column by the cost per shaft shown in the second and third columns.

Q. And the last column on page 5, again, of your report? A. That was obtained by deducting the items in the fifth column from those in the fourth.

Q. And on page 5 of your report you show the grand total savings and burden, $452,206.73? A. Yes, sir.

Q. What relationship, if any, has this total burden saving to the use of the Melling cam lathes set forth in page 5 of your report in the sum of $452,206.73, and the total productive labor savings for use of the Melling cam lathes appearing on page 4 of your report in the sum of $342,963.22 with the total saving of $795,169.95 computed by you and appearing on page 3 of your report? A. Well, the total of the item of $452,206.73 on page 5, and the item of $342,963.22 on page 4; these two total to the item of $795,169.95 shown upon page 3, not only in total, **(59)** but each of the individual items and sub-totals on pages 4 and 5 add to the corresponding item on page 3.

* * * * *

(62) Cross Examination by Mr. Farley.

Q. What was your occupation, Mr. Moise, prior to 1922? A. I was with the Steel Corporation.

Q. In what capacity? A. I was Treasurer of one of their companies and accounting officer of one of their larger divisions.

Q. When did you procure your C. P. A. degree? A. I took the examination in 1930. I think I got my degree in January, 1931.

Q. In the State of Ohio? A. In the State of Ohio.

Q. You stated on direct examination that you had been in supervision and installation of cost accounting for a number of automobile manufacturers, is that correct? A. Yes, automotive parts manufacturers.

Q. Just who were some of those manufacturers? A. I can not give the name of any clients.

Mr. Spohn: Objected to, just a moment. I object to that question as incompetent, irrelevant and immaterial. The witness is called as an expert witness, and he should be protected in the designation of his own clients.

Q. Have you ever installed any accounts for the manufacturer of automobiles as distinguished from automotive parts manufacturers? A. Not of automobile manufacturers.

* * * * *

(65) Q. You did not take into account in your computations any additional productive labor that might have been incurred because of necessity to straighten the shafts? A. This relates to the one operation solely because it is based on speeds, and it is the only operation that is shown to have been affected.

Q. Will you please answer the question "yes" or "no"; I asked if you took into account the additional operation because of straightening? **(66)** A. I didn't take it into account in this particular calculation. It is based on one alone.

Q. You did not take into account in your computation appearing on page 6, either, did you, the cost of maintenance of the machines; running maintenance? A. Yes, that is included. It is included, not on page 6, which is productive labor—yes, it is included in page 6 because it is in the burden.

Q. It is in the burden? A. Yes, sure.

Q. The burden in so far as that—where did you obtain that figure for burden? A. Pardon me?

Q. Where did you obtain that figure for burden? A. I obtained the burden from the data presented by counsel, I think on June 1, for such periods as that covered, but for 1925 I was compelled to rely on defendant's cost summary cards, because no burden figures were presented by defendant as such for that year. That is all set forth on pages 7, 8 and 9.

Q. Do you know how many operations are covered by the cost summary cards from which you took this burden figure? A. I don't get you? Oh—I don't know just how

many in each case. I do know in a given period it would probably correspond with that other sheet which is made from time studies.

Q. Do you know how many different parts were made in that particular department? A. I do not.

(67) Q. If the burden figure as given for that department covered a large number of operations, and if it were found upon examination that that burden figure is accepted, perhaps, for the whole plant, would it not change the burden figures materially if, as a matter of fact, in the experience of the Ford Company they had to use twice as many maintenance men to keep the Melling machines in operation as the Ford shapers? A. That isn't a burden rate for the whole plant. It is supposed to be the burden rate for that department according to the defendant's figures. There is no possible means yet presented in any evidence which will permit the breaking down of the elements of overhead in the Ford method of accounting; at least, in so far as any evidence so far presented. This method of using the overhead based on direct labor is the generally accepted one when there is no more scientific or other method of dividing or allocating it by items, and it is the method used by the Ford Motor Company in determining its inventory values, and, consequently, its profits as shown by cost summary cards which carry an inventory. It is the defendant's own method.

* * * * *

(76) Q. On this question of burden, appearing on your page 5, just how did you arrive at the figure, let us say, at the top of the second column, Ford cam shapers, $.015028? A. Pages 7, 8 and 9. That is the burden ratio. First, you have to turn to page 6 because, of course, you understand page 5 is merely an extension in totals of the unit cost shown on page 6. The corresponding item to the $.015028, the one on which it is based—if you will turn to page 6 you will find that that is .7514, which, multiplied by the .02 man hours required, comes to the .016286. The derivation of the .016286 is, therefore, very clear in itself. It is the burden cost per hour multiplied by the fraction of an hour required to shape a shaft with a Ford cam shaper at a speed of 25 per machine hour; 50 per man hour.

Q. Yes, but where did you get the figure? I understand that the **(77)** figure, .016286 on your sheet 6 is obtained by multiplying the figure in column 2, .8143 by .02; is that right? A. No; obtained by multiplying the burden cost per hour, 75.14 percent by .02.

Q. By .02. That gives you the figure—you blurted it out there. A. I am sorry.

Q. The .016286 figure? A. Yes.

Q. In the fifth column on page 6, that is obtained by multiplying the .8143 by .02, is that correct? A. No—yes, that is obtained by multiplying the .8143 by .02.

Q. And the burden figure of .015028 is obtained by multiplying the figure $.7514 by .02? A. That is right.

Q. I would like to know where you got the figure of .7514. A. That is obtained by multiplying the .8143 by .9227, which is the burden ratio to productive labor for that period.

Q. Where did you get the figure .9227? A. Now we come to where I thought we were to start.

Q. Yes. A. If you will turn to the first sheet, page 7, the first sheet of burden ratio to productive labor, you will find in the first group of figures in the right-hand column 92.27 per cent, which, of course, is .9227. That is the one figure which has to be obtained from cost summary cards at one period because in the data, Exhibits 1, 2 and 3, there was nothing for the year 1925, but there were cost summary cards **(78)** for 6 of the months in there, and those were used, all except December, and that showed that—from the cost summary cards, showed during those 5½ months on the production of 921,325 shafts each of the month's production that made up that total being multiplied by the labor cost and the burden cost taken from the cost summary cards, and so arrive at a total labor and a total burden for each period. Those added and divided the burden by the labor gives .9227.

Q. Have you convenient reference there to the cost summary cards you employed? A. They can be located on the record by the corresponding months. They are all on this exhibit, I think it is "E"; Exhibit "E." There is a tabulation of cost summary cards for each month, and there will be the corresponding months. That runs away back to 1923. For instance, take July, 1925—June is a half

month—and you will find on that, the second column on page 7, you will find .2960 for labor. The second item in the second column on sheet 7 is .2960.

Q. What month? A. July is the first complete month. July, 1925, you will find in the second column, page 7, the labor cost taken directly from the cost summary card of .2960, and opposite a burden cost taken from the same location of .3271. Those are the items shown in the second and third columns and the second line under "Unit Costs" on page 7.

Q. Did you carry out the burden on the figures given there in your total on page 7? **(79)** A. Yes.

Q. In the last column? A. Yes. In the testimony given here at the last hearing it was stated that those used on the cost summary cards were identical with the ones that made up the burden ratio, but they did not present the burden ratio and I was compelled to use the cost summary cards for those 6½ months. All the rest of it is based on the actual figure handled in Exhibits 1, 2 and 3.

Mr. Spohn: That is, Exhibits X-1, X-2 and X-3?

A. Yes, X-1, X-2 and X-3.

Q. (By Mr. Farley): Now, you have this weight of average burden percentage used for 1925 the figure of .9227. A. Yes.

Q. What I am trying to get at, did you use this .9227 to obtain the figure in the last or the right-hand column there on page 7? A. Yes.

Q. What? A. That is the result of those figures; by multiplying the production each month by the labor cost each month, and adding them up, I get a total labor cost for the 5½ months shown. By multiplying the production by the burden cost per unit I get the total burden for each of the periods, and adding them up I get the total burden for 5½ months. Dividing the total burden by the total labor naturally gives me a ratio of burden to labor, and that is what I have used.

Q. I don't know whether you understand me. What I am trying to get **(80)** at is, take for example, the month of October—or, let us say November of 1925 where you have a unit cost of labor .3084 and burden cost of .2570. A. Yes.

Q. Did you obtain the amount of 54,728.15 by multiplying 212,950 by .2570 or by taking?— A. (Interrupt-

ing): I obtained the item 65,673.78 by multiplying 212,950 by .3084, and I obtained the figure 54,728.15 in the last column by multiplying 212,950 by .2570.

Q. Now, your figures on burden, then, obtained from the cost summary card is based upon the assumption in so far as your sheet 5 is concerned, that both of these type machines required the same amount of maintenance; the maintenance of those machines bore the same proportionate part to the total burden as used in the cost summary cards? A. No individual elements of overhead are considered at all in there. It is based on the assumption that the overhead or burden of the department is reasonably in proportion to labor over a long period. There is no data presented which will permit of a complete breakdown of the overhead elements in any department there, nor is there any data which will give the cost per individual operation.

Q. If you ascertained from investigation that twice the amount of maintenance and men were required to keep the Melling machines running as against the shapers, would you not modify these burden figures accordingly? A. Not unless I could get a complete breakdown of all the overhead. **(81)** If I could, I would consider each one. Some may be in favor of each one and some may be against it.

* * * * *

Q. Now, for the period from January, 1926, to November, 1926, on your sheet 7, as I understand your computations there, you took the productive labor from Exhibits X-1, X-2 and X-3? A. Yes.

Q. Might I ask if they were cost summary cards? A. No. That is the data presented with counsel's letter, I believe, on June 1, this last meeting; that is the first time we had that. It is in the record.

Q. And I take it, without taking time to check through all of that right now, that those records, X-1, X-2 and X-3, just gave overhead for department 410 and productive labor for the entire department. That is true, isn't it? A. Yes.

Q. For those months, January, February, March, June and November? A. Presumably the entire department, and those are the only months included. The low production months were not included; normally low production months.

Q. And then you took the average, you averaged those figures and used the burden percentage of 132.19 for the entire year? A. For 1928.

Q. For 1926? A. Yes, for 1926.

(82) Q. And, you did the same for 1927? A. Yes, again they had 5 months there. In 1928 they did better. They gave 9 months there. 1929 gave all 12. 1930, they gave 12. 1931 had 2 months. That is so far as department 410 was concerned. Page 3 shows the same thing for department 105, or 102, 105, and 106 combined, which performed, according to the testimony, more or less the same functions.

Q. In each of these years where you saw fit to take the burden percentage as contained in the record, you used that for the particular month where you selected it, and then for the months where you did not select that particular figure you used an average; is that correct? A. No. For the entire year I used the average figure, because that is all the data we had. In some cases it was the complete year. Each year—

Q. (Interposing): Let us get to the year 1926. A. All right.

Q. To obtain the figure of 404,013.04, you obtained that figure, as I understand it, by multiplying 305,634.51 by 1.3219; is that correct? A. No, that 404,013.04 is the addition or actual overhead shown on the Exhibits X-1, X-2 and X-3. Those figures in that column for January, February, March, June and November are copied directly from the Exhibits X-1, X-2 and X-3. That "404" is merely an addition of those 5 items.

Q. Now, referring back to page 6, as I understand your method of computation, it was to take the production for the entire **(83)** period of June 16, 1925, to December 31, 1925; and to take the average burden ratio for that period in obtaining your burden figure as given in page 6; is that correct? A. Yes; and as used in page 5 in getting totals. Page 6 merely determines the cost under various conditions per shaft which is used on page 5 to determine the total.

Q. Now, that figure of yours, let us consider that period from June 16, 1925, to November and December, 1925, the percentage of burden for the months of October, where you had the production over 200,000, for those months it was quite a little less than the figure of .9227,

was it not? A. Yes, but may I say this is a weighted average; that means that the "two hundred and twenty-seven thousand" is given much more weight in this average than the "ninety-two thousand," for instance. This is not what they call a "Dutchman's average"; it is a weighted average.

Q. But where the production dropped down and you figure an average burden, doesn't it make the burden much higher than the actual burden for those particular months? A. For some it is lower and some higher, but it makes no difference to the average way of getting it, because when you have a large number of shafts that gets more value in determining an average than when you have a small number of shafts, and the averages are used. You can multiply those out individually and the difference one way or the other would be relatively trifling.

The Master: By what method did you weight the average?

A. I took the total labor shown and divided it into the total **(84)** burden shown for all the periods given. I might say—we have practically everything from 1925 by those cost summary cards, but, unfortunately, for 1926 you have not as many months; you have not December or the middle of the year which, in most periods, are the low months. You just don't have them. Therefore, if anything, based on any normal ordinary method of ordinary factors, those ratios are lower than they would be if you had the complete year, because the dull months always run an average up.

Q. (By Mr. Farley): But, when you increase the average that way and multiply it by the larger production, the larger productive months, tends to increase the burden figures quite materially? A. No, it rather tends to decrease them, if anything. It doesn't make much difference. Generally you use a weighted average always; you give a value in proportion to the number of shafts; to each one of them.

The Master: In getting your 132.19 figure for the year 1926, then, that does not represent the addition of these burden percentages for individual months divided by 5; it rather represents the three hundred and five thousand and a fraction figure divided into four hundred and four thousand?

A. Yes. If you wish to do some figuring overnight, you can take each one of those individually and multiply them out, and you wouldn't have much difference.

Q. (By Mr. Farley): Then, as I understand it, your figures here **(85)** on page 5 are obtained by taking this weighted average in each year and obtaining the burden cost by multiplying—that is, the sum total of cost by multiplying by the production for that month? A. Well, I obtain—

Q. (Interposing): For the entire period. A. I obtained the burden cost per year for the year by multiplying the labor rate for that year by the average ratio for that year. Just bear in mind, if I may clarify it a little, how would you suggest that we would get the intervening months when the defendant has produced no overhead figures for anything but 5½ months? How would you get the intervening months?

Q. You didn't take into consideration the practice prevailing in the defendant's plant of using the last average burden figure? A. I did not, because they did not do that throughout. The last prevailing figure was quite high. There is one case where you would have used 225 percent for a year if you had done that—something like that. It would have been absolutely unfair. If you could get your figures you would find this is giving a lower burden ratio than if the figures were available for each month. There is no question it is lower. Not, perhaps, in the months in which you had the data, 1929 and 1930, but for any months the rest of those years, undoubtedly, those burden ratios would be higher if you had your dull months in there. I think your own accountant would bear that out.

Q. But, in the months where the figures were fairly completely **(86)** available, the results obtained by you were more unfavorable to the defendant than if the actual figures had been taken? A. No. Some would have been a little more favorable and others a little less. In the higher months they would have been higher; and, in the small, lower, but they would average close. You can readily take those figures here that are complete, and if you use the same figures I have and extend them, you will see how much difference it would make. It would be trifling.

Q. However, the thing that strikes me at first glance is the year of 1925 where, for the last two months, the fig-

ures for October and November, the production for those two months is equal to the—practically, to the four months preceding? A. Yes.

Q. And for those two months the burden rate is considerably less than 92.27, whereas you have used a higher figure? A. It is a little less, but bear in mind, for instance, the "212" month, the last month, has over twice the value in determining that average than either the first or third months have because it is a weighted average. Your difference would be insignificant; maybe a little more in one month, and a little less in the other, but that difference isn't so great even in that one month.

Let us take the "222,950" month. (The witness figured with pencil and paper.) It would be really 88 in that one month against 92. But, if you take one of the other months, the "172,650," which is not much under, and divide .2960 and .3271, you got 110 percent, and yet you only **(87)** use 92.27 for those. I suggest, you can resolve these very readily by having those all extended and find out what difference there is.

The Master: From a theoretical standpoint, which type of calculation do you think is the most accurate?

A. I think the annual one, your Honor, for the reason that in plants generally, owing to seasonal conditions, burden is considered on an annual basis. The reason for that I can cite by one very simple illustration. An element of burden is repairs. Now, when things are running full, a plant very seldom gets a chance to make repairs on machinery; they go ahead and use it until they get pretty bad if their production is right up to 100 percent. But, during the dull months a lot of these machines would be repaired. That is caused by the heavy months' activities, but it occurs in the dull months. Naturally, while that is part of the expense caused by the heavy months, it is incurred in the dull months when they have time for repairing. That is one way in which they spread labor today so that we get more and more, so that overhead actually incurred in one month is not necessarily caused by that month's operations. For that reason accountants and cost men prefer to take an annual burden rather than a month, because that averages all these conditions fairly well. That is why the

annual method is much fairer than using an individual month which fluctuates for all sorts of causes.

Q. (By Mr. Farley): Of course, that statement just made by you is not based upon any knowledge on your part of any practices in the Ford Company? **(88)** A. It is based on good accounting practice, as I see it.

* * * * *

(97) Cross Examination by Mr. Farley (Continued).

Q. I assume, Mr. Moise, that you are aware of the fact that these proceedings here are designed to place the facts before the Master as to costs as accurately as possible? A. Oh, yes.

The Master: Answer out loud, Mr. Moise.

A. Yes.

Q. (By Mr. Farley): Now, if we assume that it is the fact that in the operation of the Walcott machines at the Ford Motor Company, a straightening operation was needed to fit the shaft for the turning operation, and that such a **(98)** straightening operation was not needed on the cam shapers, that straightening operation should be included as a part of the cost, should it not, for the Melling machine? A. If so established for T-410.

Q. Now, will you turn to your Exhibit B, page 6, and in the fourth column from the right-hand side you have taken a figure of man hours per shaft of .01333, that is correct, isn't it? A. Yes.

Q. Now, if, as shown in Defendant's Exhibit 14, I call your attention to operation 12, straightening, .50. A. Yes.

Q. Will you take that figure, .50, and compute the figure you would get figuring man hours per shaft in the same way you obtained the figure .01333? A. It would be 5/8 of whatever the other is; I can tell you how much difference it would make in the whole business, if you want.

Q. I want you to make that calculation, first, how would you determine man hours per shaft taking the time one-half minute? A. Taking the time of one-half minute?

Q. Yes. A. Well, exactly the same way that this is with 80 minutes, which is determined here, I haven't the working papers with me, .80 minutes per shaft would be

divided by 60, which gives .01333. Now, if you divide 50 by 60 you get .00833. .00833 that would make, subject to correction, I think that is right, which if that is included would make in place of—

(99) Q. If you add that figure, .00833 to the figure you have, .01333, what would be the result? A. .02166.

Q. Would you mind jotting that figure .02166 on your sheet there above the figure .01333 in the fourth column? A. Sure.

Q. Now, will you figure the productive labor and the —now, your productive labor figure in that line, in the next column to the right, is .010855, isn't it? A. Yes.

Q. And if you take the figure man hours per shaft, .02166, as you just penciled it in, and you multiply that by the productive labor rate per hour which you have given in column 2— A. Yes.

Q. —that is the second column, will you do that, please? A. That gives .017638.

Q. Now, will you do the same thing for the burden—

The Master: Just a minute.

A. I will check them in total when I get through.

Q. What is your next figure for the third column for the burden? A. .019987, but I want to verify that.

Q. Yes, I think your calculation is off there. A. I get the same thing, but there is some mistake in that.

Q. You want to multiply .01333 by .7514. A. Wait a minute. That labor figure is wrong. I added the difference. That labor figure should be .017637. No, it should be .016275, I beg your pardon, that is the burden figure, .016275.

(100) Q. Now will you add—

Mr. Spohn: Is that the burden figure?

A. .016275.

Q. Will you add those two figures and place a total in pencil in the last column? A. .033913, which proves across.

Q. Those figures, therefore, show if you compare the total in the last column on the right-hand side of the page with the 6th column from the left-hand side under the heading "With Ford cam shapers, cost per cam shaft, total," .031314—excuse me, 7th column from the left, it shows a

greater total per unit, the figure .03389, no, the total .031314, isn't that correct? A. Yes, if you accept that as you have stated it, which I do not.

Q. Incidentally on that point I understood you to say you do not know anything much about machines or machinery? A. I am not an expert.

* * * * *

(101) Q. (By Mr. Farley): Now, will you take your total on page 3, total cost of Melling cam lathes, of $85,382.33, and modify that cost with the figure obtained, or the total per unit of .03389?

* * * * *

(103) A. Subject to later verification—did I understand you, Mr. Farley, you wish the total cost for all T-410 shafts with the Melling cam lathes if that operation is included?

Q. Yes, based on the figure you just obtained of .033913.

Mr. Spohn: May I ask a question here, Mr. Farley, to see if I understand the question too? What you want is $85,382.33, the figure appearing on page 3, that Melling cam lathe total cost, multiplied by .033913.

Mr. Farley: No, divided by that first.

A. Including the straightening operation at fifty one hundredths of a minute, the total cost of all model T-410 made with the Melling cam lathe would have been $139,915.18, subject to later correction.

Q. Well, Mr. Woehrle has a somewhat different figure, $138,736.57, **(104)** and you get the figure of 139, is that right? A. $139,000. Mr. Woehrle is very likely correct, he had available office machines which I haven't.

Q. I think that he did the figuring on the pad just the same time you were doing it right here. A. If Mr. Woehrle has figured that carefully, I will be willing to accept his figures for a moment.

Q. Now assume the figure of 138,000 then is correct—A. What is his exact figure?

Q. $138,736.57, assume that figure is correct, then the third column, or rather the last column, the right-hand column on page 3 entitled "Saving through use of Melling cam lathes," $42,719.94, would have to be changed to a

loss of approximately $10,000, would it not? A. Yes, $10,634.30.

Q. Now I assume you were present when Mr. Watts made his opening statement about this standard of comparison? A. Yes.

Q. And might I first ask if you have had any experience in patent accountings before? A. Very limited.

Q. Are you familiar with the doctrine of standard of comparison? A. With the what?

Q. With the doctrine of the standard of comparison as stated by Mr. Watts. A. Yes, I think so.

Q. And that is that the standard of comparison is with any known and the best known means available to the public at the time **(105)** of the alleged infringement? A. Yes.

Q. Now I think I asked you yesterday who told you to use the Landis grinders in comparing costs between model A shafts and Melling cam lathes? I do not think you answered that question. Would you mind answering it today, please? A. Well, I can answer that question this way; I took the grinders—

Q. Just a moment, please. I asked you who told you to use the Landis grinder. A. No one.

Q. Very well, you have answered the question, you can proceed if you want to. Well now, if we assume that the model A shaft could have been made on the cam shaft shaper, then your comparison of the Landis grinders would also have to be modified, would it not? A. If that assumption is granted, why, of course.

Q. And if the comparison between the cam shapers and the Melling cam lathes on the model T shaft showed a loss of $10,000, wouldn't the same general factor prevail as far as the model A shafts are concerned? A. Under the premises you stated, yes.

* * * * *

(123) Q. Will you turn to page 9 of your report, Mr. Moise, and I note that you state in the second column "From data supplied June 1, 1938, by defendant (Exhibits X-1, X-2, X-3)." For the month of March, 1926, you used the burden percentage of 187.70? A. Yes.

Q. Now, for the month of March, 1928, you have used the suggested percentage of 176? **(124)** A. Yes.

Q. I am just curious as to why when you used the suggested percentage of 176 which was used by the Ford Motor Company for March, 1928, you did not use the 150 percent which had been employed by the company in March of 1926, but used the 187.70. A. The Ford Motor Company used 176 apparently because they had reason to believe that that particular month of 211 was distorted, and Mr. Hovis stated that when overhead ratio was clear out of line they sometimes disregarded it and used another figure, so we just used the Ford procedure as noted.

Q. You followed it in one month but refused to follow it in the other? A. We followed it in all as far as I know where they were given. All those cost summary cards which we made ourselves are from there, Mr. Farley.

Q. Here is a copy of Exhibit 3 and you will note for the month of March, 1926, it states in brackets that 150 percent was used instead of the 187.70. A. Oh, yes, I stand corrected on that one thing; we did not use a percentage that was so very much below large production months which was at that time, the other we did use 176 because it was somewhat in line with some other percentage, but the 150 was below anything shown by them for even on good-sized production months. We could not use that because it was out of line with everything they had shown before.

(125) Q. You state that is so out of line with anything that you had seen. I just direct your attention to the month of March, 1927, which shows 133.38 percent. A. Yes, I am talking about anything like the same period. That is 1926, January, February and March show 169, 168, 188, practically, and then they use 150 percent.

Q. Yes, but March of 1927, they have 133 percent. A. Conditions might be entirely different in another year, that is a period closely approximating that. There is no card given, no record given within that year that even comes close to 150 percent.

* * * * *

(133) Q. It is your opinion that a time study with a stop-watch, as shown on this time study sheet then dated July 1, 1931, is a more accurate way of determining the performance of the machine than a statement of Mr. Wibel when he testified, is that the idea? A. Yes, sir, afterwards

as to the speed, yes, I would prefer to take a time study that is definite and at a given period as to the speed of machines.

* * * * *

(138) Re-Direct Examination by Mr. Spohn.

* * * * *

(139) Q. Now, Mr. Moise, yesterday counsel examined you, at least, with respect to your computation of burden set forth on page 5 of your report, and the supporting schedule. Have you, since yesterday, had an opportunity to make a computation of the burden by taking month by month figures where available, and where not available for particular months, taking the last prior month available? A. I have.

Q. Now, subject to such verification as you may want to make of those figures after checking the same, do you have an opinion as to whether or not the use of the month by month computation as made by you in the manner in which I have stated would have changed the profits which you have set forth on page 1 of $795,169.95? A. According to the un-checked calculations I made it would have increased the profit by approximately $4,000 to have used the monthly basis where available, and I think the last month where there were no burden calculations available for any **(140)** particular month.

Q. In spite of that calculation indicating that increased profit, do you have an opinion, as an accountant, and from your experience, can you state which of the two methods will more clearly reflect profits? A. I consider that the annual method would more clearly reflect profits, and if desired I will explain why.

Q. You may state why. A. For the reason that one month is very likely to be distorted by excessive repairs, or lack of repairs, or various other things, adjustments that are made annually; all of which go into an annual statement. When you are using certain selected months as illustrative of a whole year, you may miss altogether the months in which adjustments have been made or heavy repairs have been made, or you may miss months in which very light repairs have been made; but, generally speaking, in this instance, in this case, the months that are

omitted are the normally smaller production months for automobiles, and the smaller months as shown by the production in this case. Therefore, if we had complete records of burden and labor for every month, I think it can be stated almost positively that the average burden rates for the years would be higher, but I do not believe in using individual months because they do not recognize those annual factors of which I have spoken.

Q. When you say the average burden rate would have been higher, you mean higher than the averages which you used? A. Higher than the averages which I used.

Q. Now, isn't it a fact that the use of those higher averages in **(141)** those cases would have increased the profit here? A. It would.

Q. Now, Mr. Moise, can you state the principal elements or bases upon which your report in this case proceeds? A. Yes, I think I can. Based, first, on the production of shafts. The production of shafts was, in all cases, taken from the records furnished by the defendant. Second, on the speed of production with different machines. That, again, was taken from testimony for T-410 and F-446, and calculated to the best of my knowledge because there were no records for A-6250 for that particular shaft. Now—

Q. (Interposing): Any other bases? A. Any other elements? Oh, yes. That has to do with the speed. Then, there is the average rates for productive labor which, again, were taken from exhibits amended furnished by the defendant. The fourth is the burden rate. In each case that was taken from information furnished by the defendant.

Q. And your computation of burden was on an annual basis? A. My computation of burden was on an annual basis.

* * * * *

(145) Re-Cross Examination by Mr. Farley.

* * * * *

(146) Mr. Farley: There was one question I neglected to ask upon the cross examination, and if there is no objection I would like to ask it now.

Mr. Spohn: I would like to reserve my objection on that until I hear the question.

Q. When I went over with you the correction of the cost as set forth in your sheet 6 to include the straightening operation on which you jotted down on the exhibit the pencil figures, I neglected to ask you with respect to your computations under the heading with Melling lathes for the model A cam shafts **(147)** and the model tractor F-446 shafts, that if the same corrections were made to include the straightening operations it would also increase the cost in about the same proportion as in the case with the model T, would it not? A. You asked me that this morning.

Q. I don't think I did on the model A. A. Anyhow, I don't mind answering it again. Of course, it would increase them all. I don't know whether in exactly the same proportion or not, but it would increase the cost on the Melling lathe in all cases they were used if the straightening operation was included.

Mr. Farley: That is all.

* * * * *

---

(152) CHARLES GORDON was thereupon called as a witness on behalf of the plaintiff herein, and having been first duly sworn, testified as follows:

DIRECT EXAMINATION by Mr. Spohn.

Q. Your name is Charles Gordon? A. Yes, sir.

(153) Q. Are you the same Charles Gordon who testified heretofore in this proceeding in evidence taken before the Honorable Judge Tuttle? A. Correct.

Q. Mr. Gordon, what would determine the turning time required to turn the cams on the T, A and F shafts turned by the defendant on the infringing Melling machines? A. What would determine it?

Q. The turning time. A. The turning time?

Q. Yes. A. The area; that is, the surface area of the cams.

Q. Would actual turning time required to turn the cams on the T, A and F shafts by the defendant on these infringing machines solely determine the production of shafts per hour? A. Oh, no.

Q. What other matters other than the actual turning time? A. There would be the loading, unloading and lost time that, I think, would be constant in all three shafts; very closely.

Q. Could the defendant have ground the A, T and F shafts on a Landis grinder? A. Yes, sir.

Q. Do you know whether they ground any of those shafts on the Landis grinder? A. They ground the "F" shafts on the Landis grinder, to my knowledge; to my personal knowledge.

Q. And you say they could have ground the other two shafts? A. Yes.

(154) Q. What would enter into the determination of actual grinding time to grind the cams on the T, A and F shafts on Landis grinders? A. The area of the cams would have a large bearing in it, and, of course, the thickness or the depth of the metal, with the excess metal that had to be removed, would be a large factor. But, assuming that the depth of the metal was approximately the same throughout on all of them, the area would determine very largely what production they could get.

Q. Would the actual grinding time required to grind the cams on the T, A and F shafts on Landis grinders solely determine the production per hour? A. No.

Q. What other matters other than actual grinding time would have to be taken into consideration? A. Loading, and unloading, and lost time. That would be very similar in all three cases.

* * * * *

(163) Mr. Spohn: If your Honor please, I have three more exhibits which have been marked for identification as Exhibits "FF," "GG," and "HH." I want to state to your Honor and counsel the purpose of this offer so there will be no misunderstanding. The purpose of the offer is solely on the question of reasonable royalty—after I have had the instruments identified before the offer is made. The offer, when made, will relate solely to the question of reasonable royalty in this case. I will identify them first.

Q. Now, Mr. Gordon, I show you a single typewritten sheet designated as Exhibit "FF," purporting to be signed by the Gordon Form Lathe Company by Charles Gordon,

president. Is that your signature (handing document to witness)? A. Yes, sir.

Q. Is that an original instrument? A. That is a carbon copy.

Q. Is it a duplicate original? A. Yes, sir.

Mr. Spohn: It is a written instrument, your Honor please, so I will read it. "For and in consideration of $1055.28 figured at the rate of three-quarters of a cent per cam on a total production of 140,704 cams turned on infringement machine intervening between November 22, 1928, **(164)** the date of the first installation, and February 18, 1930, the date of this release, the under-signed, the Gordon Form Lathe Company, an Ohio corporation, owner of the entire right, title and interest in and to Letters Patent of the United States, No. 1,542,803, dated June 16, 1925, covering an improved lathe hereby releases and forever discharges the J. I. Case Company, a Wisconsin corporation, of Racine, Wisconsin, from all claims and demands for past infringement of said patent by reason of its use of the two four-cylinder cam shaft type infringing lathes identified in an agreement of even date herewith releasing said machines for future use."

Q. Did the Gordon Form Lathe Company, the plaintiff in this case, receive the check therein referred to of $1055.28? A. They did, yes.

Q. Did you tender this release to the J. I. Case Company as indicated in the release itself? A. Yes, sir.

Mr. Farley: If your Honor please, I am going to object to the introduction of that, and I am going to ask that the part that Mr. Spohn read into the record be stricken. It is an attempt to go in the back door, we might say, of inadmissible evidence. The Supreme Court has laid down the rule very strongly in the case of *Rude versus Westcott*, 130 U. S., that evidence concerning past settlement or past infringement is not admissible in an accounting proceeding to allow reasonable royalty, or established royalty, or the like.

* * * * *

(173) The Master: Suppose, as I get on this other question, I reserve a ruling on the issue of admissibility but permit the plaintiffs today to go ahead and question, and the defendants to cross-examine the same way as they would as if the evidence were admitted, and then I can make a ruling when I have more opportunity to study these cases here.

(174) Mr. Spohn: Under your Honor's ruling I will offer in evidence Exhibit "FF," subject to your Honor's ruling, of course.

Q. Now, Mr. Gordon, I show you a paper marked for identification as Exhibit "GG," purporting to have the signature of the Gordon Form Lathe Company on it, and signed by you, and ask you if that is your signature (handing document to the witness)? A. It is.

Q. Is that a duplicate original? A. It is.

Mr. Spohn: I will read Exhibit "GG" in evidence.

"For and in consideration of $2450.92, the undersigned, Gordon Form Lathe Company, an Ohio corporation, owner of the entire right, title and interest in and to Letters Patent of the United States, No. 1,542,803, dated June 16, 1925, covering an improved lathe hereby releases and forever discharges the White Motor Company, an Ohio corporation, of Cleveland, Ohio, from all claims and demands for past infringement of said Patent No. 1,542,803, by reason of its use, and the two four-cylinder cam shaft type infringing lathes identified in agreement of even date herewith releasing said machines for future use.

"Dated this 28 day of December, 1929, Gordon Form Lathe Company, by Charles Gordon, president."

Corporate seal affixed.

It is a release given to the White Motor Company. The other was the Case Company.

(175) Q. Now, Mr. Gordon, I show you a letter marked for identification as Exhibit "HH" today purporting to be on the stationery of the White Motor Company, and I will read that letter in evidence. The title:

"White Motor Company,
"Manufacturers of White Trucks and Busses,
"Cleveland, Ohio,
"December 24, 1929.

"Mr. J. W. Michael,
"Bottman, Hudnall, Lecher, McNamara & Michael,
"Trust Company Building,
"Milwaukee, Wisconsin.

"Re: Gordon Cam Lathe Patent.

"Dear Sir: Your letter of December 16, 1929, has been received.

"We would like to effect a settlement both for the past and the future, and are herewith submitting the data which you requested during our discussion of this subject in Mr. Richey's office.

"Number of crankshaft contour machines owned by the White Motor Company—none.

"Number of cam cutting machines owned by the White Motor Company—two (both of the four-cylinder cam shaft type).

"Number of cams cut prior to July 1, 1925,—none.

"Number of cams cut from July 1, 1925, to June 12, 1929 (thirty-seven thousand, nine hundred nineteen cam **(176)** shafts)—303,352.

"Number of cams cut from June 12, 1929, to December 21, 1929 (3,013 cam shafts)—24,104 if extended.

"We do not believe that we were given proper and adequate notice of the infringement prior to June 12, 1929, but in order to effect an early and complete settlement of this matter we are willing to pay the Gordon Form Lathe Company the sum of $5,000, the same to cover both damages and the future releases of our machines.

"Please let us have an early reply.

"Yours very truly,
"The White Motor Company,
"R. M. Cooper (typed),
"Patent Engineer."

Q. Mr. Gordon, did you receive a check from the White Motor Company for $2455.92 referred to in Exhibit "GG"? A. I did.

Q. Do you know the basis upon which that money was paid? A. That was paid on the basis of three-quarters of a cent a cam.

Q. And was reference made to the number of cams set forth in this letter of December 24, 1929, 327,456? A. That is correct.

Q. I am not sure, Mr. Gordon, whether I asked you if you received the check for $1055.28. A. Yes, you did.

Q. Referred to in Exhibit "FF"? A. Yes.

(177) Q. When I say "you" I refer to the plaintiff the Gordon Form Lathe Company. A. Yes.

Mr. Spohn: I offer in evidence Exhibits "GG" and "HH."

The Master: Ruling is reserved on them.

Mr. Farley: Of course, my objection is on the record.

The Master: Yes.

* * * * *

(178) Cross Examination by Mr. Farley.

Q. Mr. Gordon, when has your company sold your last cam shaft machine? A. I don't remember the date, but it was prior to 1925.

Q. Prior to the granting of the patent? A. Yes.

Q. How many cam shaft turning machines did your company sell? A. I wouldn't remember the exact number, but I think it was in the neighborhood of 30 cam shaft lathes.

Q. Cam shaft lathes. How many crank cheek lathes? A. I think there were 10 or 12; I don't remember.

Q. 10 or 12? A. I don't remember the numbers.

Q. Let me ask, in the case of any of the cam shaft lathes which you sold, did you ask or obtain a royalty from the purchaser of three-quarters of a cent a cam for the use of that machine? A. Of the cam shaft machine?

Q. Yes. A. At the time of sale or—

Q. At the time of the sale. I am not speaking of these; I am speaking of lathes sold by the Gordon Company. A. No.

Q. In no instance did you get from any purchaser three-quarters of a cent a cam for the use of the machine? A. At the time of the sale.

Q. Or at any other time as far as your Gordon machines were concerned? **(179)** A. You mean continuous beyond these settlements?

Q. Settlements haven't anything to do with it. We are talking about Gordon machines; the settlement refers to Walcott machines.

Mr. Spohn: Is the question limited strictly to the Gordon machines, counsel?

Mr. Farley: Yes.

Mr. Spohn: Objected to as incompetent, irrelevant and immaterial; not within the issue.

A. No, we did not.

Q. As to the Gordon machines you sold them outright for a lump sum? A. We did.

Q. And some of those machines were made by some other machine company? A. Willard Machine Tool Company.

Q. Did that company pay you a royalty for the machines? A. No, sir.

Q. Did you, as the inventor, get a royalty from the Gordon Form Lathe Company?

Mr. Spohn: Just a moment, I object to this examination; that is not the issue here.

The Master: Well, the Gordon machine and Walcott machine are both designed for the same purpose, and they are closely enough related so that the Gordon machine was held to infringe the Walcott machine. Wouldn't the question of what royalties were received upon the Gordon machines have some bearing upon a reasonable royalty?

(180) Mr. Spohn: The testimony is he sold the machines outright.

Mr. Farley: It has a decided bearing on this question of reasonable royalty.

The Master: I will overrule the objection.

Mr. Spohn: Read the question, Mr. Reporter.

(The question was read by the reporter.)

A. No.

Q. (By Mr. Farley): And, you never asked or requested from any purchaser of your machines a royalty of so much per cam for the cams that were turned upon your machines, is that right?

Mr. Spohn: Just a moment, I raise the same objection.

The Master: I will overrule the objection. I think you can bring that matter out on argument or redirect examination.

A. No.

Mr. Farley: That is all.

RE-DIRECT EXAMINATION by Mr. Spohn.

Q. Mr. Gordon, the Gordon Form Lathe Company, the record shows, has the title to the patent in suit? A. They have, yes.

Q. And you are a stockholder of that company? A. Yes, sir.

* * * * *

(204) CHARLES GORDON was thereupon recalled for further examination, having been previously duly sworn, testified further as follows:

RE-DIRECT EXAMINATION by Mr. Spohn.

Q. You are the same Charles Gordon who testified yesterday in these proceedings? A. Yes, sir.

Q. Now, Mr. Gordon, do you recall the last machine made under your patent by your company? A. I do.

Q. And what machine was that? A. That was a machine that was tested out at the Ford Motor Company.

Q. Was that prior to or subsequent to the issuance of the patent? A. That was prior to the issuance of the patent.

Q. And can you fix the time when that machine was being tested by the Ford Motor Company? A. Well, I cannot say positively. It was around 1924.

Q. Was that machine ever sold? A. It was not, no.

Q. Why didn't your company, after the issuance of your patent—strike that—after the issuance of the patent why was it that your company did not manufacture or

sell any machines under the patent? A. Well, we felt that the competition that we were up against with the Melling people made it so that we did not feel it would be profitable.

(205) Q. Did the purchase by the defendant company of the Melling machines set forth in this record in 1924 have any part in contributing to your determination not to manufacture and sell? A. Yes, I think that is what finally determined that we would not go ahead manufacturing any more.

Mr. Spohn: That is all, Mr. Gordon.

Cross Examination by Mr. Farley.

Q. As a matter of fact, Mr. Gordon, the machine you had at the Ford Company proved to be very unsatisfactory, did it not, to the Ford Company?

* * * * *

(207) A. The only thing I can say is that the Ford Company did not accept the machine. I do not know anything beyond that.

Q. (By Mr. Farley): You do not know anything beyond that? A. I say I do not know anything beyond that in reference to that question.

Q. Why did your company take the machine out of the Ford plant and take it back to some other place for reconditioning, or whatever work you did do on it? A. Because there was defective parts in the machine and we wished to correct them.

Q. To that extent then, you yourself realized the machine was unsatisfactory, that is correct, isn't it? A. Not any more than any machine, defective parts in those machines might be a reason for a desire to take them back.

Q. I will ask that question again, and I would like to have you answer it with a "yes" or "no" answer, please. To that extent the machine was unsatisfactory in so far as you were concerned, because you took the machine out and did further work on it?

* * * * *

(209) A. Yes.

Q. Now, Mr. Gordon, how long was the Gordon Company in operation, the Gordon Form Lathe?

* * * * *

(210) A. If I remember correctly it was organized in 1921. I am not sure of that date, but it is still in existence.

Q. (By Mr. Farley): How long did the Gordon Company operate as an operating company that were building and selling machines from 1921 to what date? A. About 3 years, as I remember it. They did later furnish parts for machines that were out.

Q. And you operated until some time in 1924. Now, do you recall when the machine you were questioned about at the Ford Company was sold by you to the Ford Company, or, rather, was introduced into the plant of the Ford Company, let us say? A. No, I have no clear recollection of those dates.

Q. There was introduced in the trial below, Mr. Gordon, an order of the Ford Company directed to the Motch & Merriweather Machine Company, which was dated 6-2-22. I will let you see that. That was introduced as Exhibit 56. Were **(211)** you familiar with that order? A. No, I was not.

Q. I understood your testimony to be that the last machine that was made by the Gordon Form Lathe Company was the machine which was sold to the Ford Motor Company. Does that refresh your recollection as to the date of manufacture of that? A. No, it does not, because I was not active in either the selling or manufacturing at that time. I was located in Milwaukee and the manufacturing was done in Covington, Kentucky, and the sales organization was, their headquarters was in Cleveland, and I did not know of any of the detail of that that was going through.

Q. This Exhibit No. 56 shows a stated purchase price of the Gordon cam shaft turning lathe as $4,335. Does that conform with your recollection of what you sold those machines for? A. I think that that was the price.

Q. And did you sell practically all of the Gordon machines at about that same price, the cam shaft machines? A. I think that was considerably lower than any other sale we made.

Q. And as I recall your testimony you stated that you had sold some 30, I think it was, of the cam shaft turning machines during the period from 1921 to 1924, you say that period was? A. The first machine that was sold I think

was sold in '19 or '20, but that was before the organization of the Gordon Form Lathe Company.

Q. Well now, your answer isn't quite responsive. I do not think you intentionally refrained from answering. My question was **(212)** directed to the number of machines, about 30 cam shaft machines. A. About 30 cam shaft machines were sold.

Q. And just what profit did you make off of those machines, Mr. Gordon? A. Well, I am unable to tell you.

Q. You do not recall that? A. I had nothing to do whatever with the accounting of the concern and as I say I was not even located there.

Q. Did the Gordon Form Lathe Company operate at a profit in those years from 1921 to 1924? A. I couldn't say positively whether they did or not. I am not enough familiar with—

Q. Have you any records of the Gordon Form Lathe Company, are they still in existence? A. We have some of the records.

Q. Could you produce the records that would throw some light on this question of the profits made by the company? A. Well, I don't know what they would show. I have some records and just what they consist of I don't know.

Mr. Farley: Now, if the Court please, in view of the question asked by Mr. Spohn and the testimony of the witness, I now make formal demand on the plaintiff for the production of the records of the Gordon Form Lathe Company because—

Mr. Spohn: We have no objection—

Mr. Farley (Continuing): —because I think the question of profits at which the company might have operated I think has more bearing than the self-serving testimony and self-serving **(213)** declaration of the witness that purchase by the Ford of the machines drove them out of business.

Mr. Spohn: We have no objection, we will be glad to produce all the records we have bearing on the subject.

* * * * *

(214) Q. (By Mr. Farley): You were notified by the Ford Motor Company before this incident occurred of tak-

ing the machine out which your company did for overhauling, or whatever you did with it, you were notified by the Ford Company that the machine was not operating satisfactorily, weren't you? A. I do not personally know, but I would expect they did; I would assume they did. I did not have any of that correspondence myself.

Q. Now, you testified on the prima facie case that you yourself spent 3 weeks at the plant of the Ford Company, shall I say "nursing" that machine, probably you did not use that language, but attempting to make that machine operate satisfactorily? A. Among other things. I had a great many other things to do there that had no connection with the machine.

(215) Q. But you did spend some three weeks in the Ford plant in and about that machine? A. In the Ford plant, yes, sir.

Q. And a great part, or a certain part of that time was work in connection with attempting to make the machine operate satisfactorily, isn't that true? A. In a sense that is true, but most of the time was spent in trying to get the material that was to be put into the machine in shape so that any machine could operate it satisfactorily.

Q. I see, but all the work that you did there at the Ford had to do with the operation of your machine? A. Yes, sir.

Q. And you were advised by the officials of the Ford Company, or at least by the employees of the Ford Company, during that three weeks' period, were you not, of unsatisfactory operation? A. Yes.

Q. And how much after that time you were in there, how much longer did the machine stay in the Ford plant, do you know? A. Well, I think a very short time, but I couldn't give you any period because I just don't remember. It did not come to my direction. The business was handled through the Sales Department and I was not connected with that end of the work at all.

Q. Just when was it that you went to the Ford plant yourself to demonstrate, or attempt to make the machine work satisfactorily; was that after the machine was reconditioned? **(216)** A. Yes.

Q. Or over-hauled. You had something to do, did you not, Mr. Gordon, with the preparing of that machine be-

fore it was sent to the Ford Motor Company, in attempting to equip it to turn the Ford Company shafts? A. Only that I was in the plant when the machine was completed and saw a test run in the plant where the machine was produced, the Willard Machine Tool Company. I would like to correct that. As I remember now, the test that I saw was the test made when the machine was returned and the defective parts were replaced. I think that was the test that I saw, not prior to its first being sent to the Ford Company.

* * * * *

(217) Q. Now, you testified, Mr. Gordon, in the case below in connection with the Westinghouse machine, or I think it was the Stoddard-Dayton machine, after a machine of that type had been demonstrated to the Court, that the machine could not operate efficiently because the tool was not at the correct cutting angle. I am just wondering whether you would be willing to state to the Court what is the limit of error that the tool may have of the type of machine shown in the Gordon patent, what is the limit of error, the maximum error that in your opinion may exist before a machine will operate inefficiently?

* * * * *

(218) Q. (By Mr. Farley): Do you understand the question, Mr. Gordon? A. I think I do. As I understand the word "efficient," is more or less limited. As soon as you depart from the correct position on anything it then starts to become inefficient to that extent. There are certain well-known rules as to cutting tools, what is desirable and what is undesirable, and as soon as you depart from the desirable it becomes to that extent inefficient. It is possible there for a man to do more work with a sharp pick axe than it would be with one that is all worn down. Just at what degree it must be worn down before he ceases to be able to dig a hole, I don't know, never having tried it, but there are certain elements in cutting tools that depart from inefficiency in that tool much more rapidly than others, and different circumstances, different conditions make those things more or less evident.

Q. Now, let's get to it this way; your invention, and a very important part of your invention you conceive to

be that of tilting the tool so that the tool would always remain normal to the work at its point of contact with the work? A. Yes, sir.

Q. Now, how much from that normal stage of the work would you say would be the maximum that can be permitted to use in a machine using the tilting tool before the machine becomes let us say satisfactorily impossible from a commercial standpoint? A. I do not think I can answer that question because the conditions are so entirely different. It depends on where you are cutting, what you are cutting, the type of tools you are able to use, and the Stoddard-Dayton machine that you mentioned, **(219)** there would have been, if the tool had been in contact with the work, it would have been absolutely impossible at many periods during its rotation of the work, it could not have cut at all, it might have pushed off some of the excess metal but it would not have cut it off.

Q. You remember the demonstration of the Stoddard-Dayton attachment that was made during the trial below of the prima facie case? A. Yes.

Q. And you remember after that demonstration was made you prepared a certain sketch which was introduced as Plaintiff's Exhibit 149, as reproduced at page 1026, volume 3, of the record, and I direct your attention to your testimony at page 753 of the record where, in answer to the question of Judge Tuttle, who asked you, "There is no tilting of the tool in this, though," you said, "Yes, there is a very material tilting of the tool, a very erroneous tilting of the tool as it tilts into a very inefficient angle." Now I am wondering if you would tell the Court just how much departure there can be in the angle of the tool from the correct, as you maintain, correct normal angle in your patent at 90 degrees to the surface of the work, the point of contact, how much variation from that 90 degree angle may there be before the tool gets to an inefficient angle that you were talking about to Judge Tuttle below? A. For all practical purposes a slight deviation from a correct angle would probably make a very little difference in the amount of production you could get out of a machine.

(220) Q. Well now, just what do you mean by a slight deviation, say 5 percent, 5 percent or, 2 percent, or what?

A. I would sooner not say in percentage, because that does not mean a great deal.

Q. I mean degrees, I did not mean percent, I meant degrees, 5 degrees. A. Well, under certain conditions 5 degrees would be very material in decreasing the efficiency of the machine.

Q. And could we say that 10 degrees departure from correct angle would be twice as inefficient as 5 degrees? A. Why, it might be 1,000 percent more inefficient than 5 degrees, because it might make it inoperative altogether; there might be that much difference.

Q. Would you venture to say how far you could go, how many degrees you could go from the correct 90 degrees before the machine became absolutely inefficient or inoperative? A. No, I do not think anybody could say that, because it would be a matter of testing with the type of tool and the type of material and the amount of feed; there would be a great many elements enter into that which would determine it. The machine could be run and many machines are run which are very inefficient as far as their cutting efficiency is concerned.

Q. Let me ask you this, Mr. Gordon: Of the 30 machines that the Gordon Form Lathe Company sold from that period, from 1921 to 1923, or 1924, whatever it was, just how many stayed sold? A. Every one of them stayed sold, except the Ford Motor machine. **(221)** I beg your pardon, the first machine that we built was an experimental machine and there were many things on that machine which we changed when we built a second machine, and when we asked permission of the Nash Company to take that first machine away and furnish them a second machine. We did that, and later on we sold them still another machine, but that first machine we took all the elements out of it which were not built to the standard drawings which we prepared, and that machine was sold again as a new machine. I could not remember who to.

Q. And all 30 of the machines, as I understand it, were sold by your company prior to your sale, or attempted sale to the Ford Company? A. They were all paid for.

Q. I say, were they all sold by your company prior to your attempted sale of a machine to the Ford Company? A. Yes, sir.

Q. Was your business in parts rather extensive after you ceased manufacturing new machines? A. That was all that business consisted of at that time.

Q. I say, was it very extensive? A. After that period?

Q. After you stopped building new machines, did you have a large demand for repair and replacement parts? A. No, no, there was a very slight demand.

Q. Now, up to the time you went to the Ford Company had you encountered cams having as sharp a nose on the end of the cam as the Ford cam, or was that the sharpest one you encountered **(222)** up to that period? A. Well, I wouldn't say positively about that, but as far as I can remember there were other cams that were very close to that, dependent, of course, on the general angle, included angle of the nose. It might be a very sharp nose and still have a very wide angle, or it might be a round nose with a very much shorter angle, short angle, lessened angle.

Q. Well, the sharpness of the included angle, as you spoke, and the sharpness or the thinness of the nose of the cam are quite material elements in effecting the difficulty or lack of difficulty in cutting the cam, isn't that true? A. We never felt that way.

Q. Until you went to the Ford Company? A. No, we did not feel like that at the Ford Company, we did not think that had any bearing on it whatever.

Q. Are any of your machines operating anywhere today? A. I don't know.

Q. You don't know that any are operating? A. I have not been in touch with that end of it for many years.

Q. Do you know where you could get one of those machines?

Mr. Spohn: Objected to as incompetent, irrelevant and immaterial.

The Master: Overrule the objection.

A. An operating machine?

Q. (By Mr. Farley): Yes. A. I don't know of any operating, I don't know of any concern who might have one of those machines.

* * * * *

(236) LYLE E. BROUGHTON was thereupon produced as a witness, and after having been first duly sworn, testified as follows:

CROSS EXAMINATION by Mr. Spohn.

Q. Your name is Lyle Broughton, is it? A. Right.

Q. And where do you live, Mr. Broughton? A. Jackson, Michigan.

Q. What is your occupation? A. Manager of the Crankshaft Machine Company.

Q. Is the Crankshaft Machine Company a corporation? A. Yes, sir.

Q. And where is it located? A. Jackson, Michigan.

Q. Does it have its principal office in Jackson, Michigan? **(237)** A. Yes, sir.

Q. And that corporation has changed its name, has it not? A. Yes, sir.

Q. What was its name prior to its change? A. Jackson Shaper Company.

Q. How long has the company been doing business in Jackson, Michigan? A. Since July, 1916.

Q. And how long have you been connected with that company? A. Since October, 1916.

Q. What business does the company pursue? A. Special machines, crankshaft lathes, cam shaft lathes.

Q. Is it a manufacturing company? A. Yes, sir.

Q. You were subpoenaed here today, Mr. Broughton? A. Yes, sir.

Q. May I see the subpoena? A. I will get it (producing paper).

Q. And this subpoena, which you just handed to me, is in this language: "L. E. Broughton, president Crankshaft Machine Company, Jackson, Michigan. You are hereby commanded, laying aside all and singular your business and excuses, to be and appear before the Honorable Donald L. Quaife,"—and I am omitting part of it, your Honor,—"then and there to testify and give evidence in the case"—I am omitting the title—"on behalf of said plaintiff and to bring with you the originals of all letters, telegrams, orders and other papers addressed to Jackson Shaper Company by Ford **(238)** Motor Company and included in the attached photostats, also the Jackson Shaper

Company's retained copies of all letters and other papers addressed by Jackson Shaper Company to Ford Motor Company and included in the attached photostats, also return the attached photostats."

These photostats which you have just handed me, which have heretofore been marked for identification as Exhibit "O," were they the attached photostats that were handed to you by the Marshal? A. Yes, sir.

Q. And you are returning them now? A. Yes, sir.

Q. Under the order of the subpoena. Have you brought with you the originals of all letters, telegrams, orders and other papers addressed to the Jackson Shaper Company by the Ford Motor Company, and included in the attached photostats, also the Jackson Shaper Company's retained copies of all letters and other papers addressed by Jackson Shaper Company to Ford Motor Company and included in the attached photostats? A. No, sir.

Q. Why haven't you brought those? A. I am unable to locate them in the files.

Q. Have you made search for them in the files? A. Yes, sir.

Q. And did you look over these photostatic copies attached? A. Yes, sir.

Q. And have your files been destroyed, do you know? A. Some of the files, the letter files have, some of them, but **(239)** the order files never have. That order copy in there should be in our files. Could I ask a question?

The Master: Go ahead.

A. I would like to ask where these were obtained and what became of the originals?

Mr. Spohn: If your Honor please, that is a fair question, and as to part I can answer him; by asking him a few questions I think it will clear it up.

Q. (By Mr. Spohn): Your full name is Lyle E. Broughton? A. That is right.

Q. And do you remember testifying in an action in the District Court of the United States, Northern District of Ohio, Eastern Division, in which Herman W. Melling was the plaintiff versus The Gordon Form Lathe

Company, defendant; do you remember testifying in that matter? A. Yes, sir.

Q. And I will read to you your testimony and see if that will refresh your memory on that question and answer it. A. All right.

Q. (By Mr. Spohn) (Reading):

"Direct Examination by Mr. Earle.

"Q. State your name, age, residence and occupation. A. Lyle E. Broughton, residence Jackson, Michigan, occupation managing machine shop making special machinery mostly.

"Q. What is the name of that shop? A. Jackson Shaper Company.

"Q. What is the character of machinery which you build? **(240)** A. We build principally in addition to shapers, special machines for doing some special operations, some single operations.

"Q. Please state generally your familiarity with the practice of the Ford Motor Company, particularly in the making of cam shafts for internal combustion engines. A. Well, I some two or three years ago started to build some cam-shaping machines for the Ford Motor Company of their own design, I think.

"Q. Had they been using such machinery prior to that time to your knowledge? A. Yes, sir, they had been using them on the model T shaft.

"Q. What in general is the character of these machines? A. They were an upright machine with a master cam regulating the tool and in place of tool cutting around the cam it cuts cross-ways of the cam like a shaper shaving it off, the cam rotated on this tool, shaves off the metal as the cam rotated in the machine.

"Q. Can you fix the time more definitely when that took place, or the date of your transactions with the Ford Motor Company? A. (After examining papers): The verbal order for the machine was given the 12th day of December, 1923, for five machines. The price was $5,500 each. The actual date of the order, however, was the 18th day of January, 1924.

"Q. And please state what you did in connection with that order. A. Why, I had the machines probably 60 percent completed **(241)** when the order was held up and the Ford Motor Company paid me approximately $20,000 and scrapped the material.

"Q. Do you know why that was done?

"Mr. Ritchie: I object to that, he is asking him why the Ford Motor Company did something.

"The Court: He cannot say anything more than to tell the reasons assigned by the Ford Motor Company; they did assign one cancelling the order—did they assign any reason for cancelling it.

"The Witness: Yes, sir, they said they were adopting the Melling cam lathe.

"Mr. Ritchie: I object to his testifying what the Ford Motor Company said.

"The Court: Oh, it is a fact they assigned. Its probative effect, I should not think as I see the issues here, has any pertinency to any issue before the Court.

"Mr. Earle: I think that will be made clear later.

"Q. Please state whether or not prior to the time that you had seen a Gordon machine in the plant of the Ford Company? A. I saw a Gordon machine in the spring of 1923 in the Tractor Department operating on a tractor cam shaft.

"Q. And that was prior to your receiving this order for shapers? A. That was probably nine months prior to that time, yes.

"Q. Did you ever see the Gordon machine in use in the Ford Company? A. Yes, sir, I was up there and saw it operating, or attempting to be operated.

(242) "Q. With what result? A. Why, the cams were coming with a lump on one side near the point and this lump in the hardening operation of grinding would grind that hard spot and leave a soft spot on the cam.

"Q. Do you know what became of that machine, whether its use was continued or not? A. I do not. The last time I was in that department the machine was not there. I do not know what became of it.

"Q. What kind of machines are they using in that department now? A. Well, I was there some

three or four months ago, they were using Melling cam lathes.

"Q. And what have you to say as to the touring car, you spoke of the tractor, I believe. A. The touring car also was turned on a Melling cam lathe.

"Q. You know that yourself? A. Yes, sir, that is I was there two or three months ago. The last time I was in the plant probably three or four months ago.

"Q. Are these shaping machines you speak of designed for the touring car or the tractor? A. I never heard of them being used on the tractor, they were used only on the touring car, as far as I know.

"Q. This correspondence you have covers the transaction you had with the Ford Motor Company, as I understand it? A. Yes, sir.

(243) "Mr. Earle: The correspondence is offered in evidence as Plaintiff's Exhibit 123, Jackson Shaper-Ford correspondence, relative to cam shapers."

You remember testifying that way at that trial? A. I don't remember—I remember testifying, but I don't remember having the letters there.

Q. If the official report is as I read it would you say that you did produce those letters at that time? A. Evidently, yes, sir.

Q. And those letters may now be in the hands of your counsel, or others in that case? A. I don't know.

Q. You don't know where the letters are at this time? A. No, sir.

Q. You were General Manager, were you not, on March 4, 1924, of the Jackson Shaper Company? A. Yes, sir.

Q. You have gone through these letters, photostats of these letters which were attached to the subpoena? A. Yes.

Q. And do those letters, do you remember any of those letters? A. They look familiar.

Q. Would you say from these photostats that you had seen the originals of those letters before? A. Well, I might have, I could not swear that I had, but they look familiar; it is a long time ago.

Q. And the order also dated the 18th day of January, 1924, looks familiar to you, does it? **(244)** A. Yes, sir.

* * * * *

(246) Q. (By Mr. Spohn): Now, Mr. Broughton, you remember this transaction, do you, building those machines? A. I do.

Q. And the cancellation of the order? A. Yes, sir.

Q. And the payment of the $20,000, or approximately $20,000 to you, by the Ford Motor Company? A. Yes, sir.

* * * * *

(247) Mr. Spohn: I will offer Exhibit "O" in evidence.

Mr. Farley: No objection in view of the circumstances, except the other objection I made to the materiality and relevancy of the subject matter.

The Master: It is admitted.

* * * * *

(257) The Master: Mr. Gordon, did you sell your machines entirely to manufacturers in the automotive industry?

* * * * *

Mr. Gordon: It developed at that time we had worked that field because that was the field that we started out with, and they were the people who were so keenly interested in getting something to supplant the type of machine that had been used before. There was a tremendous demand for a machine **(258)** that would do that work and supplant the grinder, which was the tool that was used almost universally; used practically by everybody except the Ford Company who used the shapers.

* * * * *

---

(261) Howard Jones was thereupon called as a witness on behalf of the Plaintiff, and having been first duly sworn, testified as follows:

Direct Examination by Mr. Spohn.

Q. Your name is Howard Jones? A. Correct.

Q. Where do you live, Mr. Jones? A. 1920 Seneca Drive, Euclid, Ohio.

Q. Cleveland, Ohio? A. Euclid, Ohio.

Q. Do you have any reticence about telling us how old you are? A. Forty-two.

Q. Forty-two years old? A. Yes.

Q. You are here under subpoena, are you not? A. Correct.

Q. Mr. Jones, what is your occupation? A. Factory Manager, of the Units Division, of the White Motor Company.

Q. Where is the White Motor Company located? A. On East 79th Street, Cleveland.

Q. Here in Cleveland, Ohio? A. Yes.

Q. What business is the White Motor Company in? **(262)** A. The manufacture of trucks and busses.

Q. How long have they been engaged in that business, if you know? A. Since about 1915.

Q. How long have you been connected with the White Motor Company, or associated with it? A. Since 1925.

Q. What are your present duties with the White Motor Company? A. I am Factory Manager of the Engine, Axle and Transmission Departments.

Q. How long have you had that duty? A. For the last five years.

Q. Prior to that time what were your duties? A. I was shop engineer, in charge of all equipment and manufacturing methods, and time studies.

Q. Does the White Motor Company manufacture cam shafts? A. Yes, sir.

Q. And has it done that since you have been connected with the company? A. Yes, sir.

Q. When you first came with the White Motor Company, what were your duties? A. In charge of purchasing equipment, manufacturing methods, and time studies.

Q. Is the White Motor Company using the Melling machine now to turn cam shafts? A. Yes, we are.

Q. How long have you been using the Melling machine? A. Since about '26.

(263) Q. 1926? A. Yes.

Q. How many do you now use? A. Two.

Q. Have you been using those two continuously since 1926? A. Yes, sir.

Q. Prior to 1926, what process or method were you using? A. We were grinding.

Q. What machine did you use, in the grinding? A. Landis grinders.

Q. The Landis grinder? A. Yes.

Q. Have you had anything to do, since you have been connected with the White Motor Company, with the cam

shaft department? A. I had charge of the cam shaft department.

* * * * *

(273) Q. (By Mr. Spohn): Now, Mr. Jones, do you know whether or not the White Motor Company is paying, or has paid in the past, any royalties for the use of an invention belonging to another? A. Yes, we have paid a royalty on the grinding of spline shafts.

Q. What was the nature of that machine? A. A form-wheel grinding of the spline, in one operation.

Q. How did that machine compare with the Melling cam lathe, in character? A. It is a machine-tool that is used for the finishing operations, and the parts are different, but the operation and the time are somewhat similar, in the savings effected.

Q. About how long has your company been paying royalties? A. Up until 1935, on the grinder.

Mr. Farley: I object to this as being immaterial and incompetent. I cannot see what bearing it has.

Mr. Spohn: I should have stated to your Honor, the purpose of this testimony is solely on the question of reasonable **(274)** royalties.

Mr. Farley: What bearing could the grinding of spline shafts at the White Motor Company have on machined cam shafts? I do not see the materiality of it at all.

Mr. Spohn: If your Honor please, I think the materiality of it will develop as we go along with this witness.

The Master: I will take the testimony subject to the objection, then, and not rule on it until I hear the rest of it.

Q. (By Mr. Spohn): For about how many years prior to 1935 had you paid royalties? A. About eight years.

Q. How were the royalties based? A. They are based, 10 cents per shaft.

Q. 10 cents per shaft? A. Yes.

Q. And you had been paying that for about 10 years? A. Yes.

The Master: Answer out loud, so that this can be taken down.

Q. (By Mr. Spohn): You made some reference to savings, in referring to the royalty. What did you have in

mind when you said "savings"? A. Savings, on the grinding, are just about 10 cents, in direct labor.

Q. Direct labor savings? A. That is right, dependent on the shaft. It was still half of what it would have cost us. We would have had to perform two operations instead of one, by paying the royalty.

Q. Would you say what it would have cost you in direct labor? **(275)** A. Anywhere from 10 to 16 cents, dependent on the size of the shaft.

Q. Were there any other savings? A. We figured our overhead in as a saving.

Q. About what is your overhead, in the operation? A. About 180 per cent, for that department.

Q. Can you tell us what the total savings are,—that is, including your overhead, as the result of the payment of that royalty, by the use of that machine? A. It would be about 30 or 35 cents.

Q. Do you know whether or not your company had net savings from the use of the Melling cam lathe? A. Yes, we would have the difference such as shown on that time study.

Q. I now show you the time studies, Exhibits AA and BB, and I will ask you if you can state what your savings were, by the use of the Melling cam lathe, in the production of your cam shafts at the White Motor Company? A. The difference between 9.39 and 1.63, which would be about 7¾ minutes.

Q. And, converted into dollars, what does that mean? A. At 90 cents an hour, it would be about 11 cents, probably.

Q. That is, direct labor? A. That is direct labor.

Q. Are there any other savings? A. Yes, the burden.

Q. Considering your labor and your burden together, can you tell us what that saving would be? **(276)** A. It would be about 30 or 35 cents.

Q. Per shaft? A. That is right.

Q. Based on your knowledge of the Melling cam lathe in its operation, and the savings that the White Motor Company effected through the use of those Melling cam lathes, and having knowledge of the invention, do you have an opinion as to what would be a fair and reasonable royalty to pay for the use of the Melling cam lathe? A. I would accept it on that basis that we did on the grinder.

Q. 10 cents a shaft? A. That is right.

Q. Would you say, would you think that would be fair and reasonable? A. Yes, I do.

Q. Under all of the circumstances? A. That is right.

Q. Now, there is in evidence here an agreement between the White Motor Company and the plaintiff, under the terms of which the White Motor Company paid 6 cents a shaft as a royalty. A. That is right.

Q. What have you to say with respect to that 6 cents; did you have anything to do with the determination of it? A. Yes, I jumped at it.

Q. You jumped at it? A. That is right.

Q. And that would be below what your opinion is of the fair and reasonable royalty? **(277)** A. That is right.

* * * * *

Cross Examination by Mr. Farley.

Q. Mr. Jones, the White Motor Company is, or was a member, and is a member, is it not, of the former Automobile Chamber of Commerce, now the Automobile Manufacturers Association?

Mr. Spohn: Objected to as incompetent, irrelevant and immaterial.

The Master: I will overrule the objection. Answer the question.

A. It was.

Q. (By Mr. Farley): And what was the sum paid by the White Motor Company to the plaintiff, Gordon Form Lathe Company? A. 6 cents per shaft.

Q. What was the total in money? A. I don't know.

Q. You say you jumped at the settlement. Did you have anything to do with deciding whether or not the White Motor Company should pay certain sums to the Gordon Form Lathe Company? A. I decided on the price per operation, from a factory standpoint.

(278) Q. Now, I show you a couple of documents which have been marked Exhibits HH and GG, and I will ask you whether you ever saw those papers before, and whether you are familiar with them, or know anything about the settlement made? A. Our attorneys take care of that. We take care of the details in the factory.

Q. You are not familiar with those papers? A. No, sir, just the operation, and the price we pay per piece.

Q. Exhibit GG shows a payment of $2,455.92 by the White Motor Company to the Gordon Form Lathe Company. Is that in accordance with your recollection of the amount of money that was paid? A. I do not know the amount of money; I only know about the operations, the amount of operations.

Q. Was just one payment made by the White Motor Company to the Gordon Form Lathe Company? A. I don't know.

Q. About what is the annual production of motors by the White Motor Company? A. It varies all of the way from 8,000 to 14,000 per year, plus all service requirements.

Q. Your statement that you considered 6 cents a reasonable and fair royalty to pay is based on the comparison in your mind between the time required for roughing off the excess metal on the cam shafts, by means of the Landis grinder, as compared with the Melling machine? A. The Landis grinder, and what equipment was available at that time.

(279) Q. What equipment was available at the White Motor Company, you mean? A. Or, to go out and purchase or replace the Melling.

Q. You do not know anything about the shapers used by the Ford Motor Company, for machining cam shafts? A. I have seen them.

Q. When did you see them? A. I think I saw them around 1926, on a visit to the plant.

Q. The Ford plant? A. Yes.

Q. Were they in operation at the time? A. There was two of them I think in operation, that I looked at, down the aisle. That is approximately all.

* * * * *

Q. (By the Master): Does your opinion as to the fair royalty to be paid for the use of the Melling machines depend in any way upon the number of cams turned on a shaft? A. It depends upon comparative grinding.

(280) Q. Well, you stated that you thought that 6 cents per shaft was a fair royalty for the Melling machine. Would the fair royalty vary with the number of cams on the shaft to be turned? A. In my opinion it would vary on what we could replace that equipment with, and get the same production, from any type of equipment, and it would

consider the number of cams, together with all of the factors entering into it.

Q. How many cylinders are there in the ordinary White motor? A. We have six, six and twelve; at that time we manufactured a four.

Q. You had an eight-cylinder motor; so you had more cams for a four or a six, and the royalty per cam shaft was higher? A. Compared to grinding?

Q. Your royalty for the improved Melling machine, yes. A. The royalty would depend upon the total costs. I would say, the greater number of cams, the greater savings.

Q. Do you think it is proportional relative to the number of cams, rather than the number of cam shafts? A. No, I would say the number per shaft. The savings would go back into the shaft, compared to the number of cams, and the method you are using, to the new method that you would adopt. It would all revolve around the cost per shaft.

Q. When you stated that a fair royalty was 10 cents per shaft, how many cams did you have in mind per shaft? A. On a six-cylinder, that has twelve cams, of course.

Q. On a four-cylinder, it would have eight? A. Eight cams.

(281) Q. And the royalty should be less than 10 cents per shaft? A. We figure, in our place, a round figure per shaft; and the costs are based upon that basis. The number of cams are an element in the cost per shaft.

* * * * *

RE-DIRECT EXAMINATION by Mr. Spohn.

Q. Mr. Jones, in the use of the Landis grinder for grinding cam shafts, how many cams do you grind at a time? A. One.

Q. Does it appear that the greater number of cams on the shaft to be ground by the Landis grinder, the greater the cost? A. Yes.

Q. In turning with a Melling turning lathe, they are all turned at once? A. Yes. It does not make any difference.

Q. Now, Mr. Jones, on this Exhibit II, how many cams are on the cam shaft? A. Eight.

Q. And the time studies in evidence, Exhibits AA and BB, were made with reference to this 8-cam cam shaft? A. That is right.

Q. And your savings that you testified to had reference to those time studies? A. That is right.

Q. Upon which you based your opinion as to your royalty? **(282)** A. That is right.

Mr. Spohn: That is all.

Q. (By the Master): Had you heard of the Ford cam shapers prior to the time you saw them in operation at the Ford plant? Were they in operation or not? A. I heard of them indirectly, through a salesman.

Q. Did you ever investigate the relative costs or efficiency of the Ford shaper, as compared with the Landis grinder, to decide whether or not you would use them in your plant? A. Yes. Shaping has almost as much lost time as cutting, I would say. The shaper has that lost time, and I would not consider new equipment.

Q. It has the same lost time as what, did you say? A. Your turning is continuous, and your shaper has the lost time of returning the cut. We eliminate all shapers in our work, wherever we can.

Q. You are thinking of the shaper, as compared with the Melling machine? A. Yes, in hobbing, and manufacturing methods.

Q. When did the salesman try to sell you a shaper? A. He did not try to sell us a shaper. He mentioned it as he was coming through our plant.

Q. Do you recall when that was? A. I do not recall just exactly when it was. That was a special machine at that time, a Ford special.

Q. Were you using the grinder at that time, or was it subsequent to the time? A. We were using the grinder. We investigated the method, of **(283)** getting away from the grinding, from the cost standpoint, and a quality standpoint.

Q. (By Mr. Farley): When was that, Mr. Jones, what year? A. When I first went with White; that was about '25.

Q. (By the Master): The Melling machines were available at that time? A. Yes.

Q. You considered the Gordon Form, as against the Melling machine, or some similar type of machine? A. That is right.

* * * * *

RE-CROSS EXAMINATION by Mr. Farley.

Q. Just what do you mean by saying you would not consider a shaper because of lost time? You mean because of the return stroke, it does not cut? A. Your return stroke, and your upkeep, and your intermittent cut, for performance.

Q. You do not know anything at all about how long it would take to shape a cam shaft on that shaper, do you? A. We could not go into a special machine, from our standpoint, due to our standpoint. It was not tried out; so that we would not take that chance.

Mr. Farley: Would you read the answer, please?

(The answer was repeated by the reporter.)

Mr. Farley: The answer is "no," isn't it, you do not **(284)** know how long it would take?

A. Not on that shaper.

* * * * *

---

(289) MILES G. SLONIKER, called as a witness herein, on behalf of the Plaintiff, first being duly sworn, was examined and testified as follows:

DIRECT EXAMINATION by Mr. Spohn.

Q. Your name is Miles G. Sloniker? A. Right.

Q. What is your age? A. Fifty-five years.

Q. Where do you reside? A. Kenosha, Wisconsin.

Q. What is your occupation? A. Mechanic.

Q. By whom are you employed? A. Nash Motors.

Q. You are here, are you not, pursuant to a subpoena? A. Yes, sir.

Q. When did you become associated with the Nash Motors Company? A. In 1919.

Q. And prior to 1919 with whom were you associated? **(290)** A. The Industrial Controller Company of Milwaukee.

Q. What is their line of business? A. Manufacturing of electrical equipment such as starters and electrical controllers.

Q. Have you been with the Nash Motors Company continuously since 1919? A. Up until '31, then there was a break of time there of about three years that I was in business for myself.

Q. And you went back? A. Then I went back at Nash Motors, and I have been there since that time.

Q. And from 1919 until 1931, what were your duties with the Nash Motor Company? A. I took charge of the crankshaft, cam shaft, connecting rod, and piston lines and retained the title of general foreman.

Q. Were all those lines manufactured by Nash Motors Company? A. All in this one department.

Q. And the Nash Motors Company plant with which you were associated is located where? A. Kenosha.

Q. When you came into the Nash Motors Company in 1919, were they manufacturing cam shafts? **(291)** A. Yes, sir.

Q. What was the nature of these cam shafts, were they for their trucks, or other line of automobiles, or what? A. For the regular line of automobiles.

Q. How many cylinders did that Nash Automobile have? A. Six cylinders.

Q. How many cams on each of those cam shafts? A. Twelve cams, six exhaust and six intake cams on each shaft.

Q. What process did you use for the removing the surplus material from these cam shafts? A. We used at that time a Norton cam grinder with single wheel, one wheel was used on the job, and we ground each individual cam at one time.

Q. You were foreman in that department? A. Yes, sir.

Q. Did you ever see any records concerning the cost of rough grinding those cam shafts? A. I used to get—the costs were sent to me every month; I got my own records every month being general foreman. In fact, I got all overhead costs and everything came direct to my office.

Q. What did you do with those records? A. I used to file the records and keep them until the end of the **(292)** manufacturing year and then we just destroyed them.

Q. Did you look for any of those records before you came here to testify this morning? A. Yes.

Q. Have you been able to find any? A. Not any records whatever.

Q. Do you know what the cost is to grind the cam shafts, rough grind it on the grinder you were using when you first came with the Company? A. Yes, I know.

Q. What was that cost? A. That was set on a piecework basis and we paid $18 a hundred, per hundred shafts.

Q. That would be 18 cents a shaft? A. Yes.

Q. That was direct labor charge? A. That is just a direct labor charge. No overhead was included in this price.

Q. Was that the total cost? A. No, sir; not the total cost.

Q. What other elements entered in there? A. You have your overhead to consider.

(293) Q. Do you remember now what the overhead percentages were as applied in your department? A. Well, the lowest overhead that I can remember was 150%.

Q. How do you figure the cost then of rough grinding the cams, if you take into consideration your overhead? A. Well, including all overhead you would have to, let's see, that would be 27 cents on the overhead.

Q. And your cost would be 27 cents overhead? A. Twenty-seven cents overhead.

Q. And your direct labor charge was 18 cents a shaft? A. Eighteen cents.

Q. And that amounted to 45 cents a shaft? A. Right.

Q. You say you used the Norton grinder in this rough grinding process at that time. Do you know whether or not the grinding wheel expense was included in the over head? A. That was included in the overhead.

Q. Do you know what the Nash Motor Company's experience was with respect to the life of a grinding wheel when you are rough grinding these shafts? A. Yes.

Q. What was that experience? **(294)** A. At that time we used an 18 by 1½ by 5, 360 Norton wheel which cost $7.50.

Q. A wheel? A. A wheel.

Q. And what was the life of one of those wheels while you were grinding it? A. The best that you would get out of that wheel would be 50 cam shafts.

Q. Then that would be 15 cents a wheel? A. Yes, that would be $15 a hundred. The wheel cost would cost us $15 a hundred.

Q. Or 15 cents a shaft? A. Fifteen cents per shaft.

Q. As I understand your testimony, this grinding wheel cost 15 cents per shaft, and was included in your

overhead figure of 27 cents? A. Yes, that is included in the overhead.

* * * * *

(297) Q. When the Nash Motors Company started to use these Melling machines for the purpose of rough turning their cam shafts were all the cams turned at one time? A. Yes, they were.

Q. Do you know the cost of rough turning these cam shafts on the Melling machines? A. I do. I personally set the rate on the job myself.

Q. What was that cost? A. It costs $6 a hundred.

Q. Is that labor cost? A. That was direct labor cost.

Q. And did that include any overhead? A. Not any.

Q. And was there any other element of cost besides your direct labor cost? A. Not outside of the overhead.

(298) Q. And your testimony is that the lowest overhead you ever had in that department was 150%? A. That is right.

Q. Were these cam shafts rough turned on the Melling machine in the same department as they had previously rough ground these shafts? A. Yes.

Q. Now, with your overhead rate of 150% and your direct labor charge of $6 a hundred, can you tell us the cost per shaft of rough turning those shafts on the Melling? A. That would cost you $15 a hundred at that rate, 15 cents per shaft.

* * * * *

(300) Q. Now, your testimony is that your grinding wheel expense of about 15 cents per shaft is included in that 27 cents figure overhead? A. That is right.

Q. Then in view of your answer to that question, do you know why the same overhead percentage to the rough grinding operations you also used in your rough turning operation on the Melling lathe? A. Well, the records were sent to me each month and the total overhead for the whole department was recorded. The overhead wasn't split in units or one certain job, it came through as a part of the department in whole.

Q. That was a departmental overhead? A. That is right.

Q. Assuming that you could break down overhead to apply to each operation on both the rough grinding and

the rough turning of these cams, would the saving on the grinding wheel expense reduce the overhead ratio to be applicable to the turning operation on the Melling machines? **(301)** A. Yes, it would.

Q. Now, would the tendency of the company to allocate overhead on the departmental basis have a tendency to minimize the grinding wheel costs included in the overhead? A. Yes.

Q. Do you remember whether or not overhead figures varied per month, by months, rather? A. Well, your figures always fluctuate, you have a variation from one month to another.

Q. Do you remember the highest overhead figure ever attributed to your department while you had charge of it from 1919 to 1931, inclusive, during the period of time when your department was engaged approximately in normal operations? A. Well, the highest overhead that I can remember was 180%.

Q. (By the Master): Was that during a period of normal operation? A. Well, to a certain extent, yes. Not under a time of redesigning or changing, it was under regular production.

Q. (By Mr. Spohn): Mr. Sloniker, in order to get this straight, you said that your cams had a three-quarter inch face. Do you mean they were three-quarters of an inch wide? A. That is right.

Mr. Spohn: That is right? That is all.

(302) Cross Examination by Mr. Farley.

Q. You testified that the Nash Company got a Melling machine in 1920. Weren't you mistaken about that, weren't you confusing that with the Gordon machine? A. That is right, '25.

Q. That is 1925? A. Yes, I was confused with that.

Q. You testified in the case of Gordon Form Lathe vs. the Walcott Company, didn't you? A. I did.

Q. Deposition taken at Kenosha? A. Yes.

Q. Now, you are familiar with the Gordon machine, are you not? A. I am.

* * * * *

(310) Q. Did you have anything to do with the operation of the Gordon machine in the Nash plant? A. Yes.

Q. Do you remember the experience you had with that machine? A. In what respect?

(311) Q. In so far as the machine's working efficiency was concerned. A. As far as removing stock and cutting the cost it proved to be very satisfactory, but we found it not practical to turn the cam to finish size before rough grinding operation.

Q. When you had the Melling machine the Melling machine took two cuts, a roughing cut and a finishing cut? A. That is correct.

Q. With the Gordon machine, you said it was not practical to cut to the finished grinding size on the Gordon machine. Just what do you mean by that? A. Due to the fact that the tool going over the nose of the cam left small gouge in one side of the cam.

Q. And a hump on the other side? A. No hump.

Q. No hump? A. No hump.

Q. When you used the Gordon machine, what other means did you use for bringing the cam, roughing the cam down to the size your requirements were set to for sending it then for finished grinding? Do you understand the question? A. Yes; rough grinding operation.

Q. When you used the Gordon machine, you used in addition **(312)** to the Gordon machine, some sort of grinder as an intermediate step between the finished grinding and the Gordon machine? A. That is right.

Q. Was this intermediate step substantially the same as the finishing cut that the Melling machines gave? A. Well, you really get a better shape cam off of a turning tool than you do off of a wheel in a rough cut.

Q. When you were using the Gordon machine, for how long a period of time did you use them, do you know? A. Five or six years.

Q. How many grinding machines did you use for rough grinding of the cams after they left the Gordon machine and before they went to the finished grinder? A. Two machines.

Q. Do you remember a man by the name of Hans Luthi? A. Yes.

Q. Mr. Luthi testified that you used three machines for that at the Nash plant. Do you think his recollection is more correct than yours? A. I will tell you. Mr. Luthi was superintendent of various departments and I was di-

rectly in charge. We had three machines but we never used it on that operation because we could take **(313)** care of all the requirements—all the shafts that came off the Gordon machine on two Norton hand grinders.

Q. Before you got the Gordon machine, how many grinders had you used for rough grinding? A. Well—

Q. I think you testified four before. A. I tell you. We had three machines for that operation, but two of them run night and day. See, that is the way the production was handled.

Q. And then after you got the Gordon machines you used two of them? A. Two.

Q. Night and day? A. No. At that time we worked a ten hour day.

Q. Do you have any knowledge at all of a shaper that was used by the Ford Motor Company for roughing cams? A. No.

Q. Do you have any recollection as to the actual costs of finishing the cams by the combined Gordon and grinding method used at Nash? A. After the cam went through the turning machine for the rough grinding operation we paid nine cents per shaft or that would **(314)** be $9 a hundred.

Q. That is for the— A. (Interposing) For the rough grinding.

Q. For the semi-rough grind, you might call it? A. That is right.

Q. What did you pay for the Gordon operator? A. $5 a hundred.

Q. What is your recollection with respect to the number of tool or die makers that you had to keep on repair work on the Gordon machine? A. Our repair bill didn't run so high. That machine would operate one season, a year's time, I would say without repairs. Only just a small minor repair.

Q. Do you have any recollection of the output of shafts per hour that you got off the Melling machines per machine? A. About 16 shafts per hour.

Q. With respect to the questions asked you on direct examination concerning the length of time or difference in the length of time between finishing the shaft on the grinder in accordance with the number of cams that were on the shaft, does it make any difference at all in so far

as the time element is concerned on the Melling machine, assuming that you have two shafts and **(315)** each of the same width of cam face, let's say, each cam shaft, the cams are one inch wide. Does it make any difference in so far as the time element is concerned whether there are 12 cams or 8 cams on the shaft or 16 cams? A. I would say not any.

* * * * *

(318) Q. Now, in view of the experience you had personally with the Gordon machine, would you state whether or not there would be any difference in the functioning of the machine if the nose of the cam were very much sharper than those shown in the nose of the cams on the Nash shaft? A. In regards to the different action we had, really, it didn't show any different on your inlet or exhaust cam so according to that I personally don't think there would be any difference in the shape of the cam.

(319) Q. In the Gordon machine, the tool as it went around the nose of the cam was flopped around through a considerable angle, was it not? A. Yes, it followed the cam on an angle, certain angle.

Q. And whereas in the Melling machine, as the tool went around the nose of the cam it was comparatively slow, wasn't it? A. There is a different method in holding your tool.

Q. I show you a blueprint from the Ford Motor Company, No. A86250, and is attached to certain answers that were filed here and marked Exhibit 2, and I call your attention to the cam outline in the upper part of the drawing, and call your attention to the comparison of that cam outline and the cam outline of the Nash cams. The Ford cam had a very much sharper nose than either of the Nash cams, isn't that true? A. Yes, that is right.

Q. You never attempted on the Gordon machine, did you, to cut any cam shafts having the nose as sharp as the nose on the Ford cams? A. No, I didn't.

Q. When you used both the Gordon and the Walcott machines at the Nash plant, you had, in order to make those lathes turn satisfactory, you had to use a straightening operation on the shaft **(320)** before they were put into the lathes, did you not?

* * * * *

A. I understand. We straighten those shafts.

* * * * *

Mr. Spohn:

(343) Q. As a matter of good grinding practice on grinding these cams, it is good grinding practice to straighten the shaft before you grind it? **(344)** A. To my knowledge, I have worked on many cam shafts in different automobile factories and before a cam shaft goes to the grinding operation or a rough turning operation, the shaft must be straightened.

Q. And it is a fact, is it not, that when the Nash Company was using the Norton grinders, it straightened its shafts before grinding? A. Absolutely.

* * * * *

DEFENDANT'S RECORD.

(5) CHARLES GORDON was thereupon called as a witness on behalf of the plaintiff herein, and having been previously duly sworn, testified further as follows:

CROSS EXAMINATION by Mr. Farley.

Q. Mr. Gordon, you are the same Charles Gordon who testified, not only in the prima facie case before Judge Tuttle, but also in these accounting proceedings? A. Yes, sir.

Q. Now, you are president of the plaintiff, Gordon Form Lathe Company, are you not? **(6)** A. Yes, sir.

Q. How long have you been president, Mr. Gordon? Since the organization of the company? A. I think that I was the first president, and have been president ever since. There might have been a short time right at the beginning that I was not president.

Q. When was the Gordon Form Lathe Company incorporated? A. Well, I don't remember what the dates were.

Q. In the main case there was introduced into evidence as Plaintiff's Exhibit 4-B a document identified as an assignment from the Production Tool Company to the Gordon Form Lathe Company, and included in that was a copy of minutes of the special meeting of the Production Tool Company held on the 5th day of July, 1921, in which the following resolution was offered, and unanimously adopted:

"Resolved, that the actions of Charles Gordon, president of this corporation, and acting on its behalf in the matter of the negotiation with the Willard Machine Tool Company of Cincinnati, Ohio, and Motch & Merryweather Machinery Company of Cleveland, Ohio, be and they are in all things fully ratified, confirmed and approved.

"And, be it further resolved that the officers of this corporation shall, and they hereby are, authorized to execute in the name of this corporation an assignment to the Gordon Form Lathe Company, a corporation, organized and existing under the laws of the state of Ohio."

Does that refresh your recollection? Then, there is also included at page 958, the articles of incorporation of the (7) Gordon Form Lathe Company, dated the 30th of April, 1921? A. I think that is correct. I am not so sure about the month, but I am quite sure about the year.

Q. Then, you have been president since 1921? A. Yes, sir.

Q. The date when the corporation was organized? A. Yes, sir.

Q. And, as president of that company, it has been your duty to supervise the conduct of the business of the company, that is correct, is it not? A. Yes, sir.

Q. And, that included whether or not the company was making or losing money? That is also correct, isn't it? I say, that included supervising knowledge of whether or not the company was making money. A. I would say yes.

Q. Now, in the period from 1921 until 1923, 1924, when the company was making and selling machines, you were the largest individual stockholder of the company, were you not?

* * * * *

(8) A. My memory is that I was not. I might qualify that by saying that I think there were three other stockholders that held an equal amount of stock to what I had. That is my memory at the present time.

Q. (By Mr. Farley): Yes, but the other stockholders were the Motch & Merryweather Company, and the Production Machine Tool Company, isn't that correct? There was a one-third interest between yourself, an individual,

and the other two corporations? **(9)** A. The Production Machine Tool Company owned one-third of the stock of the Gordon Form Lathe Company.

Q. That is right. A. The rest of the stock was owned by individuals. It was not owned by any corporation.

Q. Well, according to the books of your company, the stock subscriptions for the foundation of the company showed the payment of $600 by the Production Machine Tool Company; $600 by the Willard Machine Tool Company; $600 by the Motch & Merryweather Company, and that they had the same interest in the company? A. I think that is correct. But, I don't think that continued after the organization.

Q. Yes. Around about 1924 or thereabouts you personally acquired the interest of the Motch & Merryweather Company, didn't you? A. Well, I don't know what the date was.

Q. But, you did acquire it? A. I did acquire it—not the interest of the Motch & Merryweather Company; it was the interest of—

Q. (Interposing): The individuals? A. Three individuals.

Q. I see. Merryweather, Motch— A. Two Motches.

Q. Two Motches? A. Two Motches and one Merryweather.

Q. And, you have always been vitally interested in whether the Gordon Form Lathe Company was making money or not, haven't you? A. Yes, sir.

Q. At the time you decided to take your machine off the market **(10)** which, as I understood your testimony, was some time in 1924, the Gordon Form Lathe Company at that time had lost about $18,000, had it not? A. I wouldn't be able to give you any information on that at all from memory.

Q. Well, the books of your company that were produced here show that to be the fact. Would you like the opportunity to examine those books and check the correctness of that statement? A. I don't think that would do me any good. I am not a bookkeeper in any sense of the word.

Mr. Farley: Mr. Quaife, do you know where those books are?

The Master: I will bring them in (producing the document above referred to).

Will you read the last question, please?

(The last question was read by the reporter.)

Q. (By Mr. Farley): In the ledger of the Gordon Form Lathe Company, which you produced at the hearings in Milwaukee, on the page which was identified as Exhibit KK, on page marked KK-33, I call your attention to the entries there. The first entry in the left-hand column marked "P" and "L" which is obviously intended to indicate profit and loss, it shows the entry 21, December 31st, a loss of $108.75. That is correct, isn't it (indicating); and for 22, December 31st, P and L, a loss of $10,319.54; and for 23, December 3rd, P and L, $4,343.63; and, for 24, December 3rd, P and L, $3,241.63, and it gives the total underneath that last entry of $18,013.55. That is all correct, as shown by the books there, isn't it, Mr. Gordon? **(11)** A. Of my own knowledge I couldn't say anything about it, because I probably never saw that book until sometime, maybe several years after that was written.

Q. Who did the bookkeeping for you? A. That was done under the supervision or authority, I believe, of Mr. Stanley Motch.

Q. You had a competent bookkeeper; it was your duty, as president, to know that the company had a competent bookkeeper, wasn't it? A. I thought they were. I have no reason to believe otherwise.

Q. And, you have no reason to believe otherwise of the figures contained in the ledger of your own company, have you? A. No, sir.

Q. Mr. Gordon, the Production Machine Tool Company has an interest of one-third in the Gordon Form Lathe Company, hasn't it?

* * * * *

(12) A. Not at the present time.

Q. When did the interest of the Production Machine Tool Company cease? A. Well, I don't remember what the date was. It was two or three or more years ago.

Q. Did you personally acquire any interest in the Production Machine Tool Company at that time?

* * * * *

A. A portion of it. There were other stockholders of the Production Machine Tool Company that took their proportionate share.

Q. What is your present proportion of interest in the Gordon Form Lathe Company as an individual? A. Of the stock of the Gordon Form Lathe Company? I don't remember exactly what it is, but it is 10 and a fraction, if I remember right.

Q. 10 and a fraction percent? A. No, 10 and a fraction shares.

Q. What proportion does that represent of the total? A. That would be 10/18 approximately.

(13) Q. 10/18? A. Yes, sir.

Q. 5/9, then? A. That is the same thing. It always was.

Q. More than half? A. Yes, sir.

Q. Now, as president of the plaintiff company you have claimed through the testimony of your auditor, Mr. Moise, in accordance with his last statement that is filed, that the Ford Motor Company owes you $1,110,686.13; that is correct, isn't it?

Mr. Spohn: Will you read the question back, Mr. Reporter?

(Last question read by reporter.)

A. Well, I can't check on the figures, but I think that it is in that neighborhood.

Q. And if we say for the simplicity of figures that that is $1,000,000 in round numbers, you would get 5/9 of that, considerably over $500,000?

Mr. Spohn: Object to that.

Q. (Continuing): —if your claim here is substantiated? That is your financial interest in the outcome of this case, that is true, isn't it?

* * * * *

(14) A. No, because I don't know about the amount of complications, such as costs. I am speaking of a percentage. That is, 10/18 of the final sum that was obtained, if any, in this litigation. That would be my interest; 10/18. How much that is, or what it is, or the other things that might be involved, that would determine what the amount is, is something that I don't know.

Q. Well, of course, that is just another way of saying that the sum of money you might actually receive possibly might have to be altered somewhat by costs and other expenses, but the fact still remains that that is—the higher the sum paid, the higher your 10/18 will be, the higher sum that the Ford Motor Company would have to pay. A. The greater the amount.

Q. Yes. A. Well, that is natural; 10/18 is the percentage.

* * * * *

(17) Q. (By Mr. Farley, continuing): Did the Gordon Form Lathe Company, Mr. Gordon, make a profit on any of the machines which it sold? A. Yes, sir. Directly on that machine.

Q. All right. Let us limit our question, now, to the cam shaft machines. You are probably keeping in mind crankshaft machines. Limit your answer entirely to cam shaft machines. A. Yes, sir.

Q. You offered to sell the machine to the Ford Company at, I think it was, $4350.00, was it not? A. I don't remember what the price was. I was not selling the machine at the time.

Q. Defendant's Exhibit 54 here shows machinery requisition directed to the Motch & Merryweather Company, showing a price of $4355.00 for a Gordon cam shaft turning lathe, dated 7/15/22. Does that refresh your recollection (indicating)? A. I have no recollection to refresh, because all of the selling was done through the Motch & Merryweather Company, and I was not directly connected with them.

Q. As president of the Gordon Form Lathe Company it was your duty to know at what price the machines were being sold, wasn't it? A. In a general way, yes; not each individual machine.

Q. Now, the books of your company show that, on page 36, your journal entry of May 4, 1923, shows an entry made for Ford, D. E. T. 4355. That checks with the machine requisition which I just showed to you, does it not; which, in addition to the sum of $4355, it shows an entry of $20 for a complete set of circular tools? A. It does.

(18) Q. Now, under the same listings, there is an entry, Willard, $3812.59, that shows the amount of money

you paid to the Willard Machine Tool Company for the work done on that particular machine, does it not? A. I think so.

Q. And, the M. & M. is the next entry, Motch & Merryweather, that has an entry of $653.25? A. Yes, sir.

Q. And, the P. M. T. Co., there is an entry of $435.50? A. Yes, sir.

Q. And those sums total considerably more than the $4355.00, isn't that correct? A. That is correct, and can be explained to a certain extent.

Q. Therefore, there would not have been any profit to the Gordon Form Lathe Company by the sale of that machine had the sale been fully consummated; that is true, isn't it? A. Yes, but that machine was specially built for that particular job, and we figured on absorbing the extra expense due to that.

Q. Now, the sum of $435.50 there, in that entry I just showed you, is exactly 10 per cent of the sales price of the machine, was it not? A. I think it was.

Q. And, you testified on direct examination here that you had received no royalty from any of the machines. Wasn't that payment of 10 per cent a royalty payment to the Production Machine Tool Company, and didn't the Gordon Form Lathe Company pay a royalty of 10 per cent to the Production Machine Tool Company on all of its sales? **(19)** A. I think that is correct. After having testified that we did not receive a royalty, it came to my mind sometime after that that I was mistaken in that.

Q. Then, your testimony— A. (Interrupting): I thought we had that corrected in later testimony. I am not sure, but I thought I did correct that at a later date.

Q. The testimony in that respect, then, was not in accordance with the facts? A. Unless I corrected it at a later date. I think I did.

Q. I might say for your information there was no effort made to correct it. That is the only thing that appears in the record, your statement you made that you received no royalty. That, however, should now be corrected, should it not? A. I would say so; yes, sir.

* * * * *

(45) Q. Very well. Now, let's get to the proposition of the various statements of account which were filed by de-

fendant here in compliance with the order issued by the Master at the request of the plaintiff, and we refer to the first statement of account, and before asking any of the particular questions there, I would like to ask if you remember Mr. Moise's testimony to the effect he was not versed in mechanical matters when he was on the witness stand? A. I believe that he did state something to that effect.

(46) Q. Now, insofar as your case here was concerned, it is a fact, isn't it, that you were consulted about all purely mechanical matters? A. I believe I was.

Q. You have had more actual and practical mechanical and shop experience than Mr. Moise, or any of your counsel, isn't that true? A. I think so.

Q. Was it your suggestion that a Landis grinder be used as a standard of comparison by Mr. Moise in his computations? A. I do not believe it was.

Q. Were you consulted about it? A. I think it was discussed with me and we arrived at that conclusion.

Q. At least you— A. (Interposing): I think I was in on any discussions there might have been about it, and still I would not say that positively either, because there was a lot of discussion probably with the counsel and Mr. Moise that I might not have been in on, that the counsel discussed a great many matters when I was not even in the city.

Q. But at least you approved of it at any rate, did you not? A. I think so, yes.

Q. And as a matter of fact, you knew more, or you certainly have had a wider experience in connection with the use of Landis grinders, for the grinding of camshafts, and other machinery for that purpose, than either Moise or any of your counsel, isn't that true? **(47)** A. I believe I have.

Q. So it would be perfectly natural before making a decision so important as the proper standard of comparison used by the plaintiff in this case, that you would be consulted and your opinion obtained about it, isn't that true? A. Yes, sir.

Q. You testified in the trial before Judge Tuttle, did you not, that you had seen the Ford cam shapers operating in 1915 and also in 1920, do you remember that testimony?

A. Yes, sir, I think it was about that time that I saw those machines in operation.

Q. Now, in selecting the Landis grinder as the standard of comparison, you selected about the most costly method of machining or roughing down the cams of a camshaft, isn't that true? A. No, I would say it was considered the most economical way, it was the most generally used method of doing that work, and—

Q. (Interposing): Do you know of any other method of doing that, outside of using a hammer and chisel and file that would be any more costly than the Landis grinders? A. Why, yes, I do.

Q. And what would that be? A. Why, the milling, the milling was tried and was used by one of your own companies here at tremendous expense.

Q. The Ford Company, you are not referring to the method used by the Ford Company? A. I am referring to the Lincoln Company, I saw them milling cams one at a time, that looked to me like a—

Q. (Interposing): That was before the Lincoln Company was a part **(48)** of the Ford Company, however? A. I do not think so.

Q. When was it you saw the Lincoln Company doing that? A. I don't remember what the date was, but it was after we developed our cam machine, because it was on a visit to them that I saw them performing that operation.

Q. Well, the Landis grinder is certainly a more costly way of machining the cams of a camshaft than the Ford cam shaper, wasn't that true? A. I think it would be, yes, sir.

* * * * *

Q. Are you familiar enough with the operation of the Ford cam shaper to state whether or not it could have been used on the model A or T Fordson tractor camshaft to machine the cams?

The Master: You can answer that yes or no, if you are familiar enough to so state?

A. I believe I am.

Q. (By Mr. Farley): Well, now, will you state, then, whether or not in your opinion that machine could have been used to machine either of those shafts?

Mr. Spohn: Just a minute, if your Honor please. I object to that question as incompetent, irrelevant and immaterial. It is another attempt on behalf of counsel to impeach his own witness. **(49)** I would like to be heard on that point, if I might, your Honor.

The Master: Go ahead.

Mr. Spohn: There was testimony in the principal cause of action here introduced by the defendant to the effect that these cam shapers could not be used to machine either the A or the F shafts. That testimony was not objected to, it was admitted by Judge Tuttle and was, of course, in the record as it went up to the Circuit Court of Appeals. Now, there is only one of two things possible. Either that testimony was relevant or it was not relevant. Of course, I do not assume that the defendant now, who offered that testimony then, could be heard to claim now it was irrelevant, but aside from that, that testimony was in before Judge Tuttle. If it was relevant, it was a part of the case there, and it would seem to me counsel is estopped. If it was not relevant at all, then of course he is bound by the rule of impeachment.

Mr. Farley: The question of the use of the cam shaper was really not before the Court of Appeals at all. There was no issue in the case on the use of the cam shaper.

Mr. Spohn: It is in your brief to the Circuit Court of Appeals.

Mr. Farley: Yes, the purpose of introducing testimony concerning that cam shaper was to overcome the very misleading statement by Mr. Gordon and his expert especially in the Walcott case that prior to the time he made his invention, no one knew how to machine cams by any other way than by the use of the expensive Landis grinders. I think the Court of Appeals **(50)** was very obviously misled in the Walcott case as to the actual facts concerning the machining of camshafts, but having once decided in the Walcott case that the Gordon patent was valid and infringed, obviously the Court of Appeals were not going to reverse themselves, by our showing that camshafts had been machined and millions of them machined by the Ford Motor Company, not only by the use of camshaft

shapers, but by milling machines. The purpose of this was to show that after having used, or attempted to use, the Gordon machine, a reason for buying Walcott machines, we bought Walcott machines. If we had known as much then as we know now, we never would have bought them. They cost us too much money. And, I say, your Honor, that we are in an altogether different phase of the case at the present time. We are now confronted with a claim by the plaintiff here that they should mulct the Ford Company of the sum of over $1,000,000. We are entitled under the laws relating to patent accounting to show the type of machines that we could have used, as standards of comparison. Our Sixth Circuit Court of Appeals has held in this National Tube Company case, I think it is in 12 Federal, 2nd, that the defendant there was entirely within its rights to show to the Court that a prior art machine, which never had been used, could have been modified, and the Court said there was nothing to show that defendant could not, had they known they were going to be charged and held to be an infringer, used the same ingenuity in modifying that machine, which they did as a matter of demonstration to the Master during the accounting. I think we are unquestionably entitled to show that it would have been a matter of very simple design and a **(51)** matter of merely everyday mechanical skill for a man on the job, a mere machinist, to have taken off two tools and machined six of the cams without any difficulty whatsoever.

Mr. Spohn: Your Honor please, if that is counsel's position, it is rather queer it comes up at this late date. On the original trial, Mr. Herklotz testified it was his duty to find new and a better production method. Mr. Herklotz has been in the production game for years, and he was called as an expert witness—

Mr. Farley: He was called as a fact witness.

Mr. Spohn: He was called as a fact witness, but he had charge of that department over at the Ford Motor Company. He testified before Judge Tuttle that that cam shaper could not be used, either on the A or the F shaft, and he demonstrated why. Here was Herklotz, a man who had charge of that department,

and if that matter of pulling out either two or four tools was just such a simple matter, then something was wrong with that testimony at that time.

Mr. Farley: No, not a thing.

Mr. Spohn: Now, if your Honor please, he cannot blow hot and cold on this. That testimony was put in there as a part of the defendant's case on the question of infringement and validity. It went up to the Circuit Court of Appeals on that issue. The Ford cam shaper was referred to and briefed by counsel and stressed up above in the Circuit Court of Appeals, with the attendant uses to which that Ford cam shaper could be put, as related by the testimony of Mr. Herklotz, and the Circuit Court of Appeals made its decision in this matter. It seems to **(52)** me now to turn around and reverse the theory of this case, reverse the theory of that testimony, the theory upon which the case was tried in the prior proceedings, is certainly going a long ways in this matter. It was either relevant, as I say, or it wasn't at that time, and we maintain that counsel cannot maintain now it was not relevant then or material, they offered it. If it was relevant, they are estopped by the mandate of the Circuit Court of Appeals, and if it is irrelevant he cannot change it because of impeachment.

Mr. Farley: I think I said to Mr. Spohn once before that I find it rather difficult to believe he believes some of the things he says himself, but obviously the question here is not the question that was before the Court, and which went to the Court of Appeals. The whole issues before the Court of Appeals were those of validity and infringement. We are now considering the case from an altogether different standard. The defendant hasn't the slightest intention or desire to impeach the testimony of Herklotz. Let the testimony of Herklotz stand. At the time he was testifying he was considering the matter only from the standpoint of what then was before him. The fact of the matter is there was no decision by the Court of Appeals, and you can read that decision from one point to another, which shows that the cam shapers, or any testimony concerning the cam shapers, influenced the decision of the Court in the slightest degree. The cam shaper was not urged

as an anticipation, it was presented in the case, as I said before, merely for the purpose of correcting the misleading nature of the testimony in the Walcott case. During the trial of the case, **(53)** Mr. Gordon was cross examined some about the cam shaper, because the cam shaper did constitute an anticipation, a complete anticipation, as I recall it, of one of the claims, claim 24, which plaintiff refused to urge before the Court of Appeals, and which the Court of Appeals said: "As the plaintiff does not urge these claims, for the reason given in our former opinion, we do not consider them here," and the case was dismissed with respect to those claims, dismissed without prejudice.

I still say, your Honor, obviously it is quite understandable why plaintiff wants to eliminate the cam shaft shaper as much as they possibly can from this accounting, but I know of no rule of law that will forestall a defendant confronted with the situation such as we have here, from making its defenses and making them thoroughly and show what machines might have been used, and show how those machines could have been, by the exercise of ordinary, everyday knowledge of a man skilled in the art, adapted for the purpose of machining the model A or model F camshafts.

Mr. Spohn: If your Honor please, there is a part of these proceedings in the trial below; I am looking for it, I cannot seem to lay my hand on it.

The Master: Why was the specific question asked, in the trial below, as to whether the Ford cam shaper could be used in machining the cams on the model A and tractor camshafts?

Mr. Michael: I think I can answer that. Judge Tuttle was very much concerned over the defendant's attitude in this case toward this patent after the Court of Appeals had held it valid and infringed, and wanted to know why they did not return **(54)** to this shaper, and the Ford Company brought in a string of witnesses, including Herklotz, to prove why they didn't, by explaining that they could not, that it was impossible to use the shaper on the A shaft, which was then practically the entire production of the Ford plant. Now, they turn around and say, "Why, we could have used it." That all came up when there was a question

of whether or not there should be an increase in the question of damages in this case.

The Master: Of course, it is true that the Circuit Court of Appeals held that all questions relating to the accounting should be deferred until the accounting trial.

Mr. Michael: That is right, but can they overlook testimony that was offered below on various questions that were decided pertinent to the accounting. It is only one proceeding.

The Master: In any event, any statements made at that time and in the original trial, even though they were made for the purpose of background and were not directly relevant to the issues in the case, would, I should assume, be entitled to great weight, particularly where they are put in by the same party who may be urging or putting a different interpretation on the evidence in future proceedings, whether or not it absolutely binds the defendant and prevents him from making an inconsistent defense at the present time is something that I am not so certain about. I wonder if it is true, as a general proposition of law, that if you introduce a witness' testimony on a material point, that it is impossible, or you are precluded by the rule against impeaching a witness from introducing testimony by another witness on the same point, which is inconsistent **(55)** with that, if it is independently relevant?

Mr. Spohn: No, I understand that is not the rule, your Honor. That is, I assume if I had an automobile accident and I put a witness on, and the witness went haywire and said the car was going 15 miles an hour, I am not estopped from putting on another witness to prove the fact he was going 25, 30 or 40 miles an hour, because if that were so, every plaintiff or every man in a lawsuit would be subject to the whims and caprices of one witness, and it would knock him out of a lawsuit. That is not so on any material issue. Any party is not bound by the testimony that is produced as to a material fact.

The Master: That is certainly my understanding of the rule.

Mr. Spohn: On the other hand, if it is an immaterial fact, the rule is in Michigan, and elsewhere, it cannot be impeached, of course, that is the general rule, and it is well stated here in Michigan, if it is an immaterial fact.

The Master: You cannot impeach it in the proceeding in which it is immaterial, because it would be just a waste of time to do so.

Mr. Spohn: That is right.

The Master: But the question does become material at this stage, in view of the much greater differential in costs as between the Landis grinder, or the use of the Landis grinder and the plaintiff's machine, and the use of the Ford cam shaper and the plaintiff's machine, as to whether or not the Ford cam shaper could have been used in machining the model A and tractor camshafts. It is certainly a material issue at the present time. **(56)** The only question is as to whether, in view of the previous testimony by Mr. Herklotz, the defendant is precluded from—

Mr. Spohn: (Interposing): See the situation you are in. The case is tried, testimony is taken, it is offered by the defendant without objection, direct testimony, and they are explaining the uses that a machine can be put to, a machine that they claim has defects, on the question of validity and infringement, otherwise they would not put it in, among other reasons, in addition to the reason given by Mr. Michael. That machine is referred to again in the briefs of counsel in the Circuit Court of Appeals, with its uses and functions, as described by the witnesses; that is the way the case goes up to the Circuit Court of Appeals. Can we have one fact before the Circuit Court of Appeals, in the same proceeding, and when the case comes back, have a different version of that fact, a complete reversal.

Mr. Farley: I do not think there will be any complete reversal. In view of Mr. Spohn's reference to the briefs—I do not have the briefs with me.

Mr. Spohn: I have them here.

Mr. Farley: I can check that thoroughly. I know that my own recollection of the reference to the camshaft shaper in the briefs was for an altogether different purpose, and our position with respect to the

camshaft shaper in the case before the Court of Appeals is not to the slightest extent to be reversed here, as I recall the facts.

Mr. Spohn: "A" was Gordon a pioneer * * *" The camshaft shapers were right up to the Circuit Court of Appeals.

(57) Mr. Farley: Sure, on that question, but it is not the question here at all. Our question here is in no way in the slightest degree a reversal of our position there.

The Master: I was just examining the testimony of Mr. Herklotz to try to decide or find out whether the shaper could be used on the Model A and tractor camshaft, was something that was given considerable attention by the Court or counsel, or whether it was simply brought in in an incidental or background way.

Mr. Farley: I know how it was brought in, because we produced Mr. Herklotz, just as Mr. Michael said, Judge Tuttle insisted in going into it, and spent about two days as to why we did not settle this lawsuit, and until we raised the point that that had no proper place in the lawsuit, it continued on, and when we raised the objection concerning evidence of settlement, it not being admissible in evidence, Judge Tuttle admitted it then and dropped the whole thing, but having raised the point and having gone into it, the idea as to why we did not use the camshaft shapers, we put Mr. Herklotz on primarily for testifying concerning the difficulties the Ford Company had with the Gordon machine. He was the man in the plant who knew more about the actual experience, and attempted, more or less supervised the efforts of the Ford Company to make the Gordon machine work. Incidentally, we asked him, merely incidentally, why didn't you use the camshaft shapers on the Model F, and then he gave his testimony about the interference with the bearings, and at one place, I haven't located it, he spoke of the Model T camshaft shaper, and I think he said the shaper, as was **(58)** used on the Model T. Herklotz was considering the actual physical machine as designed and used by the Ford Company on the Model T, not what the Ford Company might have done in 1927

after the shapers had been scrapped some years before, what they might have done had they wanted to use the shaper principle on Model A shafts. I think we are unquestionably entitled to show it.

Mr. Spohn: Did I understand counsel to say that the standard of comparison is a Ford cam shaper, or is it a machine constructed on the principle of the Ford cam shaper, which is it?

Mr. Farley: Both.

Mr. Spohn: Then, if your Honor please, that is an amendment of the pleadings again, at this late date, when plaintiff is through with its case. We now have a different type of standard than we had even in Milwaukee.

The Master: I understand from your statement you assume the Ford cam shapers used on the Model T camshaft could not have been used on the Model A and tractor camshafts without modification.

Mr. Farley: Without some slight modification, true. You would have to take two tools off, a five-minute job for the machinist, that is one way; another way—

The Master: You would also have a more time-consuming process, would you not, in cutting the cams, because you would have the double set of operations you would have to go through.

Mr. Farley: That is true, if you did it that way. Another point is that the actual shaper, as actually built for **(59)** the Model T, could by the attachment, the addition of a very small attachment, be used to cut all of the cams without having an additional operation.

The Master: Well, the comparison of costs as between the use of that machine and the use of the Gordon machine would be somewhat different than a comparison of costs you have made in Exhibits A, B and C.

Mr. Farley: No, it is based on our computation of cost, based on the proposition that we are entitled to show the camshaft shapers by the use of ordinary skill of the machine tool designer, would have been very readily modified to do the A shaft without the exer-

cise of any invention and with just mere everyday machine tool design skill, the type of work the men are doing out there every day.

The Master: Assuming it would not require any novelty of invention to adapt the shapers to the Model A and tractor camshaft, still the manner in which you compute profits or losses in Exhibits A, B and C, was to take the relative times—

Mr. Farley: (Interposing): That is right.

The Master: —of producing cams with the plaintiff's machine and with the shaper.

Mr. Farley: That is right.

The Master: If a modified shaper, such as would be necessary in the tractor and Model A camshaft, would require more time, it would greatly modify the conclusion as to profit or losses.

Mr. Farley: No, your Honor, if you please. Our computations have been made on the basis of that. We take the same **(60)** rate of operation that we reduce the speed, taking into consideration,—reduced the output per hour, taking into consideration—the difference in size of the two shafts, we would compute the machines as working on the same basis, but making allowance for the difference in size.

Now, as a matter of fact, on the re-design of the machine, I am in a position to show by competent witnesses that had we actually gone in to re-design the machine, we could have produced a very much more efficient machine.

Mr. Spohn: If your Honor please, I am somewhat confused by counsel's statement of account. I understood from the statements on file that the standard of comparison, as set up there, was the Ford cam shaper, on the basis of 25 products per hour, and that those, that minute cost was used all the way through. Does that obtain if you withdraw the two tools or four tools, or what have you in mind?

Mr. Farley: Mr. Spohn, I am afraid you are confused, or your recollection is not exactly accurate with respect to our statement of account. We computed for the comparison between Model T shafts machined on the shaper, and as machined on the Walcott machine, a rate of 25 shafts per hour.

Mr. Spohn: That is right.

Mr. Farley: But when it came to the Model A, we used a lower figure of approximately 20 or 21 per hour of those machines.

Mr. Spohn: Yes, but it was based on the 25 of the T production.

Mr. Farley: Surely.

Mr. Spohn: If you have to run it through twice on your **(61)** A production, your 20 or 21 is wrong.

Mr. Farley: We would not have to run it through twice, as I will show by witnesses.

Mr. Spohn: Let me get this straight. There are two you are going to rely on, the number one A Ford cam shaper with some tools withdrawn.

Mr. Farley: No.

Mr. Spohn: Will you state it?

Mr. Farley: We haven't computed it on that basis.

Mr. Spohn: In Milwaukee you did.

Mr. Farley: I asked some questions concerning it.

Mr. Spohn: No, you didn't.

The Master: May I ask this: The statement of account embodied in Exhibits A, B and C, is based upon the use of such a modified cam shaper for the Model A and tractor camshaft, as you are now suggesting as the proper standard of comparison, or was it based on the same type of cam shaper used on the Model T.

Mr. Farley: It is based on the same type shaper, with the small modification that would be necessary.

The Master: Are the modifications taken into consideration in these exhibits?

Mr. Farley: Yes.

The Master: Well, do I understand that with the modified machine—this may be anticipatory, but I would like to find out what your position is, with the modified shaper which would be suitable for the tractor and Model A camshaft, would you have to have two operations to first insert the work piece in one **(62)** way, and then turn it around.

Mr. Farley: No, not with the machines upon which we based our computations.

Mr. Spohn: If your Honor please, may I have just a short recess until I check the Milwaukee proceedings?

The Master: Yes.

Mr. Spohn: Before anything further is done in this matter.

Mr. Farley: I can hasten you along with that.

Mr. Spohn: I would rather have my own observation for the time being.

The Master: We will take a recess until two o'clock.

(Thereupon, a recess was taken until 2 o'clock p. m.)

---

(63) Detroit, Michigan,
Monday, January 16, 1939,
2 o'clock p. m.

The hearing was resumed pursuant to recess.

CHARLES GORDON was thereupon recalled as a witness on his own behalf as Plaintiff, and having been previously duly sworn, testified further as follows:

CROSS EXAMINATION by Mr. Farley (Continued).

Mr. Spohn: If your Honor please, just before lunch I called your attention to the fact I would like to check the Milwaukee proceedings, and I have checked the testimony taken at Milwaukee, and I am reading from page 337.

Mr. Farley is speaking, and he says this:

"Our point here, in view of the statements of Mr. Spohn that we are misleading the plaintiff, we pointed to the testimony of Mr. Martin and Mr. Wibel, as illustrating the principle of these shapers, principle of operation of these shapers. I can't conceive of any court preventing a defendant in a case such as this from showing that just simple, ordinary mechanical skill—and that is all that is necessary to have used that Model T shaper on the Model A camshafts. Our point right here is that in the first

place we could have used two shapers. We could have taken four tools out of that shaper, all with a monkey wrench, four tools and the machine could have gone on operating without anything, without any other change, excepting taking those tools off, and we could have shaped the cams in two operations on the **(64)** shaper. That is, using two shapers, one shaper to operate one of them—it has got four cams —and taking the tool, the things from the other machine, and cut the other four cams, and my point is this: I might say it right now, because I am going to urge it later, that if plaintiff had really wanted to be perfectly fair in making a standard of comparison, they would have made that standard instead of going to the Landis grinders. It would have made an altogether different situation with respect to their so-called profits."

Mr. Spohn: If your Honor please, I would like to have counsel state again on the record with respect to these Ford cam shapers, what their standard is. Plaintiff has about finished its case and it has relied on these accounts they have filed. It has relied upon the statement filed by the defendant in those accounts, both as to the costs on the shaper operations and their references in their account to the testimony in the principal case and the exhibits of the original Ford shaper.

I would like to have counsel state now what his position is so that we may be informed with respect to these shapers and their use as a standard of comparison.

Mr. Farley: Our position simply is that so far as the shaper is concerned, it is our intention to show it to the Court, that taking the regular design of that type of machine, it would be a matter of but simple, ordinary, everyday skill of a man skilled in the art to make the necessary modifications to those machines to enable them to function perfectly satisfactorily and efficiently on the Model A shafts or the Model F **(65)** shafts. That is one phase of it. We used that particular phase in our computations and our standards of comparisons and accounts we filed.

The Master: In the accounts that you filed, were you using as a standard of comparison the modified shaper you have in mind?

Mr. Farley: Yes, the modified shaper I have in mind, exactly. That is what we use, one standard of comparison.

The Master: Is it your contention it would have taken no more time to have operated such a shaper?

Mr. Farley: We made allowances in our computation for the difference in size of the two shafts.

The Master: Did you make an allowance for a difference in principle between the shapers?

Mr. Farley: There would be no difference in principle, if your Honor please. The machines would operate on precisely the same principle.

The Master: Well, from this statement that Mr. Spohn just read into the record—

Mr. Farley: That is another angle, if your Honor please.

The Master: Go ahead.

Mr. Farley: The point is there, and we have not as yet submitted any computation on that basis. It was my intention, however, to submit one as a further standard. In other words, we might say that is another string to our bow, but taking the Ford shapers as actually manufactured for the machining of the Model T camshafts, there would be absolutely no change required in the machine, except to have a machinist take a monkey wrench or other wrench, and remove a part of the tools and to use two (66) shapers.

Now, we have not used that, or we did not use that in the statements of account which we filed in response to the orders which you had issued, and I might say that our reason for not doing that was this:

Under the authorities the standard of comparison, and the defendant is entitled to use as his standard of comparison, the best known available means, we used the best known available means, because the knowledge to slightly modify those camshaft shapers was within the province of any skilled designer at the time, at the beginning of the infringing period, and we have used that because it is the best known available means.

However, if it should eventually be held by the Court that the slight modifications that would have been required to have those shapers working under identically the same principle, slightly modified to perform the operation of machining the Model A or Model F Fordson camshafts, should the Court decide that it was not within the province of a skilled mechanic or a skilled designer to make that modification, and that we are not entitled to use that as our standard of comparison, then I say we are entitled to put in this other standard of comparison, the use of two shapers, which, frankly, would not be as favorable, because it is not the best available means, and it is my purpose later on to show that, and perhaps put in a computation on that.

In that connection I might state that so far we have filed statements of account in pursuance of your orders.

We have, however, just started our case and I think we are entitled to show in our case anything that may be pertinent to **(67)** this whole subject matter, even though we do insert as an alternative standard of comparison still another form of comparison which we have not as yet made in the computation.

Mr. Spohn: If your Honor please, I don't want any dispute later as to what this situation is with respect to this standard of comparison. I think I understand counsel, but if I mis-state I wish he would tell me so that we have no dispute.

I understand your account is filed and computations are related to the Ford cam shaper?

Mr. Farley: That is right.

Mr. Spohn: And the computations which are made upon a Ford cam shaper, there have been some as yet undisclosed modifications which have been made or would have been made?

Mr. Farley: That is right.

Mr. Spohn: That is your position?

Mr. Farley: That is right.

Mr. Spohn: And now, then, as an alternative position, your position is that the Milwaukee position that you could have withdrawn four tools—

Mr. Farley: That is right.

Mr. Spohn: And the computation on that you have not as yet; it is in none of your accounting records?

Mr. Farley: That is right.

Mr. Spohn: Now, then, I want to read to you paragraph 25 of the statement of account, and the questions.

"Q. Point out and describe the method, step by step, and the means employed by the defendant immediately prior to the adoption and use of said infringing machines for reducing to **(68)** finished sizes the rough forged cams of automobile camshafts."

And the answer is:

"A. A step by step description of the method and means employed by the defendant, immediately prior to the adoption and use of the infringing machines, for reducing rough forged cams of automobile camshafts to finished sizes is set forth in the testimony of P. H. Martin and Elbert M. Wibel, taken at the trial of this cause, and reference is made thereto, particularly to that part of such testimony found on pages 204 and 205 and 215 to 277 of the printed record on appeal—"

The Master: Isn't that 275 to 277?

Mr. Farley: I think it should be. It is a typographical error.

Mr. Spohn: (Reading):

"—to 277 of the printed record on appeal of the within cause, and Exhibits 53, 53-B, 61, 62 and 63, supporting such testimony and statements of account filed."

And the answer to the question 2-A of Exhibit C, defendant's further statement of account, wherein you state as follows: 2-B that is, instead of 2-A.

"In preparing its Schedule 2 defendant has computed the cost of machining the cams of Model A-6250 camshafts on Ford cam shapers of the type regularly used by the defendant in its plant for machining Model T-410 camshafts,"

and 2-C, same Exhibit C, being the defendant's further statement of account:

> "In preparing its schedule defendant has relied upon the cost of the use of the cam shaper computed from established **(69)** comparative costs of the use of these shapers on Model T-410 shaft, and Model A-6250 shafts as a standard of comparison, and also the comparative costs on the Westinghouse,"

which I won't read.

In the answer to those questions, you used, did you not, or you intended to set forth and estimate, I understand you claim that you were using Ford cam shapers of the type regularly used by the defendant in its plant for machining Model T-410 camshafts.

Mr. Farley: Yes, yes. The point there, of course, is and that is a question eventually for the Court to decide,—I notice I say Ford cam shapers of the type regularly used. Now, the question is whether type regularly used limits a defendant to that identical, physical structure, or whether we are not under the authorities in a position to show that the machines that we propose to introduce testimony about, are still machines of that type, slightly modified to compensate for the differences in the dimensions of the shaft. I still think that does not preclude us from showing our position there.

The Master: Is there any indication, definite indication, anywhere in this statement of account, in either Exhibits A, B, or C, that for the Model A and the tractor camshafts you were considering a modified shaper, instead of the actual or identical shaper to that used in the Model T.

Mr. Spohn: There is not any language like that.

The Master: At the time you were preparing these statements of account you did not happen—it did not occur to you or the parties who prepared them that Mr. Herklotz had testified there would have to be a modification?

(70) Mr. Farley: No. As a matter of fact, we had that fully in mind, your Honor. I am sure that counsel for plaintiff, at least I gained the impression, that they

felt they were throwing a bombshell at us when they pointed to Herklotz' testimony.

I was fully cognizant of that testimony, and we had carefully checked the whole situation.

Our own feeling of Herklotz' testimony, I might say, your Honor, that I intend producing Mr. Herklotz here as a witness in this proceeding. We are not attempting to impeach his testimony in the slightest degree. Our position is that when Herklotz was testifying, that he had in mind, as he very frankly says, the physical machine that had been used by the Ford Company for machining the Model T's.

The Master: In order to further ascertain your position here, will it also be your claim that in addition to modifying the machine for machining the cams and camshafts, you could also have modified the camshaft itself?

Mr. Farley: I intend to show that by one of my witnesses, yes, your Honor. That would have been even simpler. I intend to show that, and if we had slightly modified the design, cut a quarter of an inch off one end of the bearings, which would not have affected the operation of the car in the slightest degree, that we could have used the camshaft shapers as they were, without any modification.

The Master: I can see various difficulties of the defense you are raising, or various questions that would have to be answered. For example, one very important question is why, if that could be done so easily, it was not actually done after the (71) Circuit Court of Appeals handed down its decision in the case against the Walcott Company.

Mr. Farley: I intend to explain that by my witnesses, if your Honor please.

The Master: There was a great deal of discussion throughout the trial of the case before Judge Tuttle as to whether or not the defendant had been guilty of deliberate infringement within the meaning of the statute subsequent to the handing down of the Circuit Court of Appeals' decision, and I think there are several places where Judge Tuttle was taking up the various alternatives which faced the defendant at the time that decision came down.

He considered that it would have been impractical to have scrapped the machines and gone back to the grinder, and I didn't see any statement made by any other witnesses or by defendant's counsel at that time that it would have been a simple matter to have gone back to the shapers, or to have shapers rather than the other.

Mr. Farley: The simple explanation of it, if your Honor please, and I intend to show that by witnesses, we have already had the Walcott machines running in the plant. The shapers were a special machine.

In the first place, they were a machine that was designed in the first instance by the Ford Motor Company. To have started to rebuild those machines would have taken just as long as it would have to produce the Pioch machines.

Within four months of the time that the decision was made, when it was finally—the conclusion was finally reached that the **(72)** modified type of head which the Walcott Company was offering was too much like the original head, and that if the original head was an infringement, this modified type of head might also be held to be an infringement. Then the decision was reached to build a new machine, and the reason why the Pioch machine was built, the milling machine, was because as long as the company was confronted with the proposition of having to make some special machines, as long as they were confronted with that proposition, they decided to build a machine which they felt sure would give them an even greater production, much greater production than they could possibly hope to get, either on the shaper or the Walcott machine, and the facts show that is exactly what happened. They put the Pioch machine in and it had more than twice the production of the Walcott machines and more than twice the production of the shapers. We could have gone to the shapers, but the Pioch machine was eventually held to be non-infringing.

The Master: You didn't know at that time you were going to be able to invent a machine like the Pioch.

Mr. Farley: They knew that just as certainly as they know they are going to turn out one thousand cars tomorrow or five thousand or how many they know. It is a matter of everyday machine design. Three or four men design machines every day that these Pioch machines are child's play beside.

Mr. Spohn: I am particularly glad counsel made the statement he did with respect to the reason why the Ford Motor Company, the defendant here, elected to use the infringing machine while they were developing the Pioch machine, and that **(73)** was that they wanted to develop a machine that would give them a great big production.

In other words, they are going to use our property right, knowing that they have no right to use that, and they did that a year or better and did it solely for one reason, and that was to give them the time to develop another machine which would cut down their costs.

The Master: On the evidential question that has been raised, I will make this ruling. I think it would be very bad policy not to, so far as possible, to get into evidence at the present time all matters which may be material, or where there is a good question of their being material to the accounting, even were I myself of the opinion that they were not relevant.

It is certainly common practice in equity cases to allow a great deal of latitude in introducing testimony, and to allow testimony to go into the record so that if the Appellate Court has a different viewpoint on the evidential question than the lower court, it won't be necessary to send it back for new trial or further proceedings, but they can wind up the proceedings at that time.

I noticed in the new Federal Rules of Procedure, Rule 43, that principle is definitely stated, and for that reason I will allow the defendant to continue with this, or to undertake this line of inquiry without making any decision at the present time to the legal significance to be given to the evidence introduced.

Mr. Spohn: Before the question is read by the reporter, we entered into a stipulation, did we not, that

at the time of trial (74) that exceptions were to be noted without further statements or oral objection?

The Master: That is right.

Mr. Spohn: If your Honor please, I want to object further to the question on the grounds it is improper cross examination. There is nothing in the plaintiff's case upon the use of the shapers as any standard of comparison at all, and it is my understanding if Mr. Gordon is called for cross examination with respect to such evidence as he has presented on the trial, he can only be examined as to that.

Mr. Farley: I might say, in view of that, if your Honor please, that we have here a substitute statement of account filed by the plaintiffs in which they have selected a certain standard of comparison. They have had the testimony of Mr. Moise on direct examination and I purposely developed it before asking this question of Mr. Gordon; that he is the man most versed on the plaintiff's own side of the case in mechanical matters. Mr. Moise disclaimed any knowledge or but very little knowledge of mechanical matters. This witness being the president of the plaintiff company, and plaintiff having filed its standard of account, I think we are entitled to examine into their statement of account setting up certain standards of comparison. I think we are entitled to examine into the standards of comparison available.

Mr. Spohn: We set up the Landis grinder on the A and F and Ford cam shaper on the T, as standards of comparison. There is no objection at all to counsel dwelling at length on cross examination on the standards that were used, but on cross examination (75) to interject some other type of standard, the discussion of which today has ranged from the Ford cam shaper up to two other types of standards, it seems to me is going pretty far afield on cross examination, even assuming the liberality that usually attaches to cross examination.

The Master: We are still restricted in the Federal courts to cross examination only to matters brought out in the direct examination, and while I think that this line of inquiry is sufficiently relevant

to the issues in the accounting proceeding so that the question itself is competent, I don't recall that Mr. Gordon himself has testified upon direct examination upon whether he chose the Landis grinder as a standard of comparison, or why he considered that in consultations with his counsel, that the Landis grinder was the proper comparison. I am inclined to think this is outside the scope of direct examination. Whether any inference could be drawn from the failure of plaintiff's counsel to put Mr. Gordon on the stand and have him testify on that, I don't know. I don't think you can examine on that unless it was covered on direct examination.

Mr. Farley: Oh, the point isn't of very great importance, anyhow, and I think I will resume a different examination of Mr. Gordon at present.

Q. (By Mr. Farley): You have already testified here, Mr. Gordon, that your machine, your Gordon machine, was unsatisfactory at the Ford plant, haven't you? A. Yes, sir.

Q. Now, you had a similar experience with your machine in the plant of the International Harvester Company, did you not?

(76) Mr. Spohn: I object to that as incompetent, irrelevant and immaterial.

The Master: Objection overruled. It is relevant to the question of special damages which has been raised by the plaintiff.

A. I hadn't anything whatever to do with the machine that went to the International Harvester Company, other than to know that one was sent there, and, of course, my business there was not restricted to the cam machines, and I was very busy on other things, and finally I started an inquiry as to what happened to those machines, or that one. I don't remember whether there was more than one machine.

Q. Didn't you, as a matter of fact, go to the plant of the International Harvester Company to assist them in their difficulties, the same as you did at the Ford plant? A. I did not.

Q. You did not? A. No, sir.

Q. And then, do I understand it to be your testimony that even though you were president of the Gordon Form Lathe Company, you don't know whether the International Harvester Company had difficulties with your machine or not? A. I heard that they did, and I made inquiry, but I didn't get any satisfaction.

Q. You are not in a position to say that the International Harvester Company was ever able to use your machine any more satisfactorily than the Ford Company were, are you? A. No, sir; I am not. I am uncertain about anything that was done **(77)** with our machine in that plant.

Q. Now, the truth of the matter is with respect to the machine at the Ford plant that that machine was in there except for a hiatus when it was sent back to be overhauled, from December of 1923, until some time in 1924, isn't that true? A. I believe that is true.

Q. And after the machine had been overhauled and sent back to the Ford Company, you yourself were there for a period of some three weeks in attempting to make it work, that is true, too, isn't it? A. Yes, sir.

Q. And you testified before Judge Tuttle that you spent a good part of every day in the Ford plant working in and around that machine; sometimes you would be there six hours and sometimes seven and sometimes eight hours, that is true, too, isn't it? A. I think it is, yes, sir.

Q. Now, did you have anything to do with certain denials that were read off by Mr. Spohn at the beginning of the hearings on July 18th here of the various facts and statements made in the defendant's statement of account? Were you consulted as to whether or not those things should be denied or not? A. I don't know what you are talking about.

Q. Well, were you consulted about any of the denials of the statements made by defendants in their statement of account?

Mr. Spohn: Do you understand the question about what denials mean?

A. No, I don't.

The Master: Do you recall that Mr. Spohn at one time in **(78)** the course of the hearings read into the

record a list of denials of the answers of the defendant in the three exhibits. Exhibits A, B and C, embodying the defendant's statement of account? He went through it paragraph by paragraph, and stated where the plaintiff admitted or denied the statement made by the defendant.

A. Well, I don't remember.

The Master: Did you have anything to do with that?

A. I don't think I did. I don't remember.

Q. (By Mr. Farley): Perhaps it might refresh your recollection if I read directly from the record. "Mr. Spohn—," this is page 29 of the proceedings of Monday, July 18, 1938.

"Mr. Spohn: Now, if your Honor please, as Mr. Watts has pointed out, the statements of account filed by the defendant in this case under the rule are pleadings. There are three statements of account and they have been designated for purposes of identification for cross examination as Exhibits A, B, and C, Exhibit A being the first statement of account and Exhibit B being an amended statement of account, and Exhibit C being defendant's further statement of account. These statements of account, as I say, are pleadings. Plaintiff admits some of the facts therein stated and denies others, and, of course, as to those denied, puts defendant to its proof, and it is my purpose now to advise the Court and counsel for the defendant what portions of these three accounts are admitted by the plaintiff, and what portions of these accounts are denied, and when I say admitted, may that be understood as accepted by the plaintiff, and when I say denied, may it be understood as meaning rejected by the **(79)** plaintiff, and I am going to go through those slowly. There are 53 questions involved in the first account, the answers to which, in some instances, were amended in the amended account."

And then Mr. Spohn started enumerating them and said question number one was admitted.

Then he goes through, for example, question number four, the answer is denied. Question number twelve the

plaintiff denies. I will skip along. And question number thirty-five plaintiff admits the answer, except the following portions of the answer which plaintiff denies: (a) A Gordon lathe as disclosed in Plaintiff's Exhibit 2, patent number 1,542,803 to Charles Gordon and Alfred W. Redlin.

Question No. 36 plaintiff denies. Questions Nos. 37, 38, 40, 41, 42, 43, plaintiff denies the answer.

Well, now, in that list of 53 answers which we filed, quite a few of them were denied. Now, my question is, were you consulted by Mr. Spohn concerning the denial of any of those answers which we made? A. It might be that I was in on a discussion of it, but I don't remember any direct work that I did in reference to that.

Q. Well, now, let us refer to question 35 or answers 35 to 43 inclusive, 45, 44, inclusive, all of which were denied by your counsel. Every one of those questions has to do with the operation of the Gordon machine in the plant of the Ford Motor Company. Now, you are the only person connected with the plaintiff who had knowledge of the operation of that machine at the Ford Motor Company, isn't that true? **(80)** A. A different man was with the machine at the time it was at the Ford Motor Car Company. The second time I think I was the only one.

Q. The question is, Mr. Gordon, you are the only one connected with the plaintiff at the present time who had direct personal knowledge of the operation of that machine at the Ford Motor Car Company, and the answer is yes, sir? A. I would say yes.

Q. Now, in your testimony before Judge Tuttle here, if my memory serves me right, you claimed that your machine worked very efficiently at the Ford Company, or at least I got that impression from your testimony, is that true or not? A. Well, I stated in my testimony, I believe, that we had trouble with one of the rolls. I also stated that a great deal of my time was used in trying to get the shafts to be turned in a condition in which they should be before being put into the machine for that operation.

Q. As I recall it, you testified generally that at one time you turned several hundred shafts through that machine. Is that your present recollection, several hundred shafts were machined at the Ford plant by your machine? A. Not at one stretch, I don't believe.

Q. Well, those shafts on which the machine was used were the Fordson F-446 shafts? A. Yes, sir.

Q. Very well. Now, I am going to read to you this answer 35. It is in answer to question 35: "Point out and describe the method," is the question propounded to us. "Point out and **(81)** describe the method step by step and means employed by the defendant immediately prior to the adoption and use of the infringing machines for reducing to finished sizes the rough forged cams of tractor camshafts."

In answer we state:

> "The method and means employed by defendant immediately prior to the adoption and use of the infringing machines for reducing to finished sizes their rough forged cams of tractor camshafts were:
>
> "(1) A roughing finish performed by
>
> (a) A Gordon lathe as disclosed in Plaintiff's Exhibit 2, patent No. 1,542,803, to Charles Gordon and Alfred W. Redlin—"

Your counsel denied the truth of that. Isn't it true that the Gordon machine was used to rough finish the cams of tractor camshafts at the Ford plant prior to the adoption of the infringing machines? A. Yes, sir; we had one machine in there and you also had a lot of grinders set up for the same operation which could be used.

Q. Yes, and which we also set up in answer to that question. So then your counsel were in error in denying the truth of that statement?

The Master: Which number was the question?
Mr. Farley: That is 35, if your Honor please.
The Master: You didn't get an answer.

A. I wouldn't know just how to answer that, because I don't know all of the circumstances.

Q. Well, the circumstances merely are this. We stated they used **(82)** a Gordon machine in answer to the question, for turning the rough forged cams of tractor camshafts. And your counsel here stated, denied the truth of that. Now, as a matter of fact, the Ford Company did use a Gordon machine for that purpose? A. They used the Gordon machine. They also used the grinders.

Q. Just a minute now. A. Let me explain the situation as I see it. We had a machine in there and that machine was not used for continuous production, whereas you did use for continuous production the grinders. Now, it is pretty hard for me to say whether they were mistaken or not, dependent upon their understanding.

Q. Well, it is a fact that in stating that, as we did, that we used a Gordon machine for rough finishing the rough forged cams of tractor camshafts, we stated the truth, didn't we? A. I think you did use it there for a small number of cams, but it was not regularly in use.

Q. Therefore, your counsel's denial of that should be retracted, should it not?

The Master: I notice, before answering, I notice in paragraph 35, first part, roughing finish performed by (a) a Gordon lathe and (b) a rough grinding operation in which the excess material is removed by means of a Landis grinder. I suppose that if you take that literally, it might be interpreted to mean that both the Gordon lathe and the grinder were used.

Mr. Farley: I don't think counsel for the plaintiff, if your Honor please, was misled by that, because they admitted all of the answer excepting the paragraph which refers to the Gordon lathe.

(83) A. Well, I don't think they were mistaken if they stated that they didn't use it, having in mind that it was not used for regular production.

Mr. Spohn: I made the statement. May I be permitted to say what I had in mind when I made the statement?

The Master: It is up to counsel.

Mr. Spohn: I don't care whether I do or don't.

Mr. Farley: It doesn't make a particle of difference to me.

Mr. Spohn: If your Honor please, we knew the Gordon machine was there. We understood it was there as a demonstrator they were trying to use for the purposes for which it was not bought as yet and never was in fact bought. I had understood that question to mean and the answer to the question to mean regularly used in the regular line of production.

We were looking here for facts and figures upon which to base an accounting for profits on an infringing or other machine they used. That is the purpose of all those questions. It is idle to say we didn't know the Gordon machine was there, or we attempted to deny its existence at the Ford plant, except as it was used regularly in the line of production. It is immaterial to this accounting from a profit standpoint.

Mr. Farley: Well, it is very material to the accounting. Of course, I might say that it is my purpose now to go over these other statements made here in the answers which plaintiff has denied. I think the burden is very clearly on us in view of the statements of account which we filed and which are denied, to show the correctness of those statements. That is, the burden **(84)** is now placed upon us to prove that the statements which we made were made bona fide in perfectly good faith, because of certain statements made by Mr. Spohn that in view of the statements of account which we had filed, they were going to make some sort of a claim which I personally consider extravagant, for punitive damages being assessed. We might shorten this. If counsel for plaintiff is willing to change his denial of all of the paragraphs relating to the Gordon machine to admissions.

Mr. Spohn: Oh, no, no. We will admit, of course, that the Gordon machine was in the Ford plant.

Mr. Farley: And that is as far as you go?

Mr. Spohn: And that it was used in the Ford plant, we will admit that, of course. The denial was that its use had any relation to these accounting proceedings, so far as plaintiff's case for profits.

Mr. Farley: I am going to show it will have a lot to do with it.

Mr. Spohn: Okay.

Mr. Farley: Very well.

Q. (By Mr. Farley): Now, then, the Gordon lathe, Mr. Gordon, which was used at the Ford plant, the answer to question 36 states is shown and described in the Gordon and Redlin patent, Plaintiff's Exhibit 2, and its intended mode of operation is described therein. Wouldn't you say that is perfectly correct, that the Gordon lathe which you

used at the Ford plant was a machine such as shown in your patent and described, and its intended mode of operation described therein? A. I would say it was practically the same, followed the patent (85) specifications.

Q. So the first sentence of answer 36 is a truthful statement of fact, then, is it not? I just read it to you. The first sentence of the answer 36.

Mr. Spohn: Yes.

Q. The particular type, the next sentence is, or character of shaft, or shafts, it was used on by the defendant, was the shaft of the Fordson tractor, designated as Model F, and the shaft is shown in drawing F-446, blueprint of which is furnished herewith in connection with answer No. 7, as Exhibit No. 3.

Now, is that a truthful statement of fact, Mr. Gordon, and I will show you Exhibit No. 3, shaft of the Fordson tractor. A. The question was is this a drawing?

Q. Yes. You may read, if you care to, the text here that I was reading from, the second sentence. That was what I just read to you. A. I would say that that is a correct—

Q. (Interposing): That is a correct statement of fact? A. I think so.

Q. Very well. That text of the second sentence there. Now, the mode of operation, our answer goes on, the mode of operation of the Gordon machine in cutting the F-446 camshaft was that of mounting the shaft which had previously been centered between the centers 11 and 20.

Now, the Ford F-446 camshafts were previously centered before they were sent to your machine, were they not, and they were mounted between the centers 11 and 20 shown in your patent? I might give you a copy of the—you might for the rest of this (86) consult this Gordon-Redlin patent which was introduced in evidence as Plaintiff's Exhibit No. 2, and which is contained in Volume 3, the book of exhibits, from pages 962 to 976, inclusive. Now, the question was, reading this again, the mode of operation of the Gordon machine in cutting the F-446 camshaft was that of mounting the shaft which had previously been centered between the centers 11 and 20, and the centers 11 and 20 are shown in Fig. 1 of the drawing, I am pretty sure. Here is 20. A. There is 20. I don't see 11.

Q. 11 is probably referred to in the text of the patent. I call your attention now to— A. (Interrupting): Here it is, 11. Yes.

Q. 11, then, is shown in Fig. 9, and for clarity of the record the text in the patent in the second column of page one refers, beginning line 91, "at the other end of the spindle 9 as provided with cone pointed center 11," and on the first column of page two in the second paragraph, line 13, it refers to "the cone pointed center 20." So then, so far, that statement is correct, isn't it, that in the use of the Gordon machine at the Ford Company, you mounted the shaft which had previously been centered between centers 11 and 20, that is correct, isn't it? A. Only that the center bearing was supposed to be turned prior to that operation also.

Q. Yes. And the description goes on:

> "And clamping the end of the camshaft adjacent to the center 11 in the split collar by means of a clamping bolt as shown in Figs. 9 and 10 of the Gordon patent."

That also correctly describes the machine you had at the (87) Ford Company, doesn't it? A. I am quite sure, excepting in regard to the split. I don't know whether the driver was a split driver or not. Sometimes we use a split driver and sometimes a solid driver, but it is very immaterial, I would judge. No, I wouldn't say it was untrue.

Q. "The work being rotated in the lathe, the cutting tools 37, one for each of the eight cams to be turned, were oscillated upon an arc having a radius, the center of which coincided with the axis of the shaft 24, shown in Figs. 6 and 7 of the Gordon patent."

That is how the machine was operated and used at the Ford plant, wasn't it? A. I didn't follow it very well, because I was trying to find what you were reading.

Q. I was reading the last sentence on page 12:

> "The work being rotated in the lathe, the cutting tools 37."

And so forth, and I stopped my quotation, "as shown in Figs. 6 and 7 of the Gordon patent."

The sentence continues, Mr. Gordon:

> "This movement of the tool serving to move the point of the tool to and from the axis of rotation of the camshaft being turned."

A. I think there was something in error here. I am trying to find the numbers. It says here, "were oscillated upon an arc having a radius, the center of which coincided with the axis of the shaft 24." Where is the shaft 24?

(88) Q. Here the tools were oscillated back and forth, to and from the center of the shaft? A. That is correct. I was thinking that you were referring to the tool—

Q. (Interposing): Tilting? A. Yes, the tool tilting, but you mean the entire tool-carrying arm?

Q. Yes. A. That is what you are referring to. Yes.

Q. Continuing on the next page:

"This movement of the tool serving to move the point of the tool to and from the axis of rotation—"

A. That I would say was correct.

Q. Next sentence:

"Of the camshaft being turned. As the camshafts were rotated, the tools 37 were given a further oscillation about their cutting points as a center by the action of a cam 44 transmitted through a bell crank lever 52 through gear sector 54 to the gear to the tooth portion of a tool holder 34 in which the tool 37 was secured."

Isn't that also an accurate statement, truthful statement of the operation of the defendant machine at the Ford plant? A. I don't find this 54 on here. Oh, yes. You have got two numbers on the same piece. This bell crank 52 and to the end 54.

Q. 54 refers to the gear sector? A. That is correct.

Q. And your answer, then, to that question is yes? A. Yes, sir.

Q. Next sentence:

(89) "The swinging of the point of the tool 37 through the arc above described was effected by the action of the cam 43, all as shown in Figs. 6 and 7 of the Gordon patent."

That is also a correct statement of the operation of the machine? A. I think that is correct.

Mr. Spohn: Now, if your Honor please, I haven't objected heretofore to any of this. I move all the examination and the testimony of the witness subsequent to my admission on the record of 1-A of 35 be

stricken. The account as filed was an account of the profits, gains and advantages derived by the defendant. This is denied on the ground of lack of relevancy. The only effect this Gordon machine has ever been claimed to have in this proceeding was on special damages, and that was not on the account at all. The denials were on the basis of lack of relevancy as to profit, gains and advantages actually received.

The Master: You admit the truth of the statements made.

Mr. Spohn: Sure, but totally irrelevant.

* * * * *

(95) The Master: So far as this witness is concerned now, since Mr. Spohn has explained the basis of the objection to these answers, I presume it is unnecessary for you to go on and question this witness about whether or not the statements themselves are true. He doesn't deny the statements.

Mr. Spohn: The denial was on the basis of immateriality and irrelevancy for the purpose of the accounting, as we understood it, which was the profits, gains and advantages.

Mr. Farley: I am quite willing to make time, if I can. It will be understood that upon further examination the witness would admit the accuracy of these statements made by us. I am quite willing to let it go at that.

Mr. Spohn: Oh, no, not the rest of it.

(96) The Master: To the point he has admitted so far.

Mr. Spohn: Down to that material he has quoted.

The Master: And you object to the rest of this answer?

Mr. Spohn: It is all previous. The objection to the other answer goes to the mode of operation.

The Master: Does the objection of your other answer go to the truth of the statement made, or to the materiality?

Mr. Spohn: Well, as I understand it, your Honor, from the point on that counsel has examined, it would go to the question of both truth and materiality.

The Master: I think insofar as it goes to the truth of the statements made, I will let counsel continue to question on that, and I wish, if there are some statements made where there is no dispute about it, about the truth of the statements that you would, when it is taken up, so state, so as to speed this up.

Q. (By Mr. Farley): The next sentence begins, "The mode of operation." I suggest to perhaps save time that counsel run over that. It won't take you over five minutes or so.

The Master: We will take a recess.

Mr. Farley: And we might save a good deal of time.

The Master: Yes, sir.

(Recess.)

Mr. Spohn: If your Honor please—

The Master: Just a minute, before you proceed. Off the record.

(Discussion off the record.)

Mr. Spohn: Now, if your Honor please, during the interval we have attempted to go through those various questions counsel **(97)** referred to, and the answers, and as I stated when we stated our denials, and so forth, they were stated merely as being rejections of that particular answer to the question, because it was not used by the plaintiff in any way. It was not to be used by the plaintiff on the question of profits, gains and advantages.

We did not attempt, of course, to deny the truth of those things, but we did deny the relevancy and materiality of them.

We have tried to go through those questions, and we believe the fast procedure would be for counsel to take them sentence by sentence, and take them on the truth only, and we raise the objection as to materiality and relevancy, and also I don't believe this is proper cross examination. It is not matter gone into on direct examination at all.

The Master: Well, I was wondering about that particular question myself, but Mr. Gordon was testifying without objection on that point.

Mr. Farley: The point there is, if your Honor please, it is of great importance to the defendant that they establish the truth of the statements set forth here. Mr. Gordon, through his counsel, has denied the truth of these statements.

Mr. Spohn: No. I am sorry that I used the word, "deny." What I should have done was to use the word, "rejected." We did not intend to use it, or in some instances we denied it as not being true.

The Master: What about the rule permitting cross examination of adverse witnesses? Isn't that incorporated?

Mr. Spohn: Is the defendant on its case now? I would **(98)** like to know if the plaintiff is through here.

The Master: Aren't you starting your case?

Mr. Farley: This would be, of course, naturally part of my case, but it takes the form of cross examination of Mr. Gordon, not only as to his former testimony, but as to the points of our case set forth in our statements of account, and I was going to mention a while ago when we had the discussion about without the scope of the direct examination that the rules, of course, permit liberal cross examinations of an adverse witness and adverse party.

Mr. Spohn: I appreciate that very fully. I am not taking the position counsel cannot call, under your Honor's ruling, an adverse party for cross examination.

I have always maintained the new rule should not apply to this case, but your Honor having ruled the rules do apply, then under the rules, a party can be called adversely.

The Master: I don't think the rules, as a whole, apply, because there might be specific rules that it might be impossible or impractical to apply, and the rules state that the Court will have discretion to apply the rules to the extent they are practicable.

Mr. Spohn: If your Honor please, you remember when we were on our accounting we called Mr. Wibel as a witness, and we were then confronted with the proposition at that time, with counsel's statement, that the Federal rules at that time did not permit the

calling of an agent of the adverse party for cross examination, and we called him as our witness, or if we called him we had to call him as our witness, and I did not call Mr. Wibel at **(99)** all. It is a poor rule that doesn't work two ways.

Mr. Farley: You must remember at that time we were working under the Federal equity rules and the new rules had not gone into effect. There is no reason why I should advance the date the Supreme Court said they should be made effective.

Mr. Spohn: My argument wasn't that. It was toward the discretion of the Court making applicable to one side of this lawsuit, rules which were not available to the other side at the time it put in its case.

Mr. Farley: The fact still remains that if it should be ruled, Congress should make a law to the effect that there be no recovery in any particular case where the mere use of a machine is had, and up to the present time that law would be not in effect, then subsequently go into effect, I am sure I couldn't be blamed to take advantage of the changes in the law and changes made.

Mr. Spohn: It is not a question of advantage.

Mr. Farley: Let me say this. There is no effort on my part, there will be no effort, so far as Mr. Wibel was concerned, and I had fully contemplated bringing Mr. Wibel in as a witness, and I am going to produce him as a witness, and you will have ample opportunity of cross examining him, but on this particular point we are now talking about, as to these denials, the denials as to these particular questions and answers about which I am now examining Mr. Gordon, those statements are relevant to matters in connection with which Mr. Gordon is fully advised of the facts.

Obviously I can't cross examine Mr. Spohn to get the denials.

(100) Mr. Spohn: You could, but you wouldn't get any information out of me.

Mr. Farley: No, because you probably don't know anything about these things, but you denied them just the same.

Mr. Spohn: If your Honor please, I did not press the matter in Milwaukee on the strength of your Honor's ruling with respect to these rules.

I think it is a serious matter in the middle of a lawsuit to switch horses, to have one set of rules that obtained when the plaintiff was putting in its testimony—

Mr. Farley: Blame the Supreme Court.

Mr. Spohn: I am addressing this to the discretion of this Court. It has it in its power to alleviate us from the rule. As I understand it, the Court has that power.

Here is a lawsuit that began in 1930, and so far as the plaintiff is concerned, it is approaching its conclusion.

The only time we attempted to call an agent we were definitely met with the proposition under the rules then existing that we couldn't do it, and we did not call that witness. We did not examine him. It would seem to me it is equally within the ability of counsel to prove anything he wants to about this Gordon machine by direct testimony, if he wants to do it, and if it is material.

The Master: On this point, why, Mr. Gordon is the man who should know more about it than any witness.

Mr. Spohn: If he can call him on direct examination, that doesn't mean he has to call him as an adverse witness to do it.

Mr. Farley: In view of your statement, we can prove this **(101)** by direct examination, I am going to state that everything stated in these answers are based upon the testimony of Mr. Herklotz before Judge Tuttle.

Now, counsel has been willing to accept 100 percent the statement of Mr. Herklotz, perhaps made inadvertently or without thinking. Further, as to certain aspects of the case, if they are equally willing to accept Mr. Herklotz' statement, as I have endeavored to bring them out here, as true, it is quite all right.

Now, the point is there is a bigger question involved, if your Honor please, than a mere adherence

to a rule of procedure. The question involved, insofar as this objection is concerned, is really are all of the facts in connection with this litigation to be placed before the Court, or is plaintiff, by relying upon the provisions of the new rules, which state that that is within the discretion of the Court, in attempting to make it appear that they are being placed at a terrible disadvantage, is that going to prevail with the Court in precluding us from bringing out and showing to your Honor what the true facts are?

The Master: I will overrule the objection without binding myself to any decision with respect to any other witness.

I think Mr. Gordon is very capable of testifying on these questions, and it would be undesirable if his testimony were not permitted on them, in view of the fact that the new rules permit cross examination of an adverse witness, and that the rules further state that they shall apply except where the Court deems it undesirable. I think that this line of questioning is competent.

(102) Furthermore, I think we are spending a tremendous amount of time on questions of objections to testimony.

Where there is an important evidential question involved, naturally counsel do not want to waive the opportunity to present their objection, but I think there is something to consider so far as possible in trying to expedite these proceedings when there is no serious harm that will be done by waiving a possible objection that might be made. Go ahead.

Q. (By Mr. Farley, continuing): Will you read the first sentence there, the second paragraph on page 13, Mr. Gordon, and state whether that is true, "The mode of operation of the Gordon machine—" A. You wish me to read it aloud?

Q. For your own information. "The mode of operation of the Gordon machine was to oscillate the tool about its cutting point as a center for the purpose of maintaining the side cutting edge of the tool substantially normal to

that portion of the work to which the point of the tool at any instant was in contact."

That is correct, isn't it? A. That is correct.

Q. The next sentence:

"Due to the swinging of the tool upon its point, it was necessary that the cam 44 be designed to swing the tool holder 34 through an angle of approximately 80 degrees while the work was turning through an angular rotation of 6 degrees."

That is also correct, isn't it? A. I couldn't say whether that is correct or not. That would have to be checked.

(103) Q. Well, will you glance at the Ford camshaft drawing, Exhibit 3 attached to Exhibit A, and I call your attention to the view at the top of the page, reading section AA, and included angle of the nose of the cam is about 6 degrees, isn't that true? A. That depends entirely on how much of it you call the nose. The nose begins at the base line and carries up to the extreme left. If you speak about just that portion of the nose that is included in 6 degrees, why, then you would have something more definite. It is very difficult to say.

Q. Very well. Refer to the part here in the drawing to which the lead line goes. ".062-R." That means there is a radius of one-sixteenth of an inch on the nose of the cam? A. Yes, sir.

Q. That is the section of the cam I am referring to as being approximately a 6 degree included angle? A. I would say it was correct, approximately; that the 80 degrees is correct.

Q. "Because of the impossibility of effecting a movement of approximately 80 degrees of the work holder 34, during the 6 degrees of movement of the work shaft, it was impossible to control the movement of the cutting tool and to keep the roller 53 in contact with the cam 44 as the tool was passing around the nose of the camshaft, the roller dropping through space without touching the master cams while the tool was going around the high point or nose of the cam."

That is a statement made by Mr. Herklotz when he testified, and would you state whether or not that is a correct statement or a truthful statement? **(104)** A. That is very decidedly incorrect.

Q. You think that is very decidedly incorrect? A. Yes.

Q. You think he was untruthful when he made that statement? A. I wouldn't say that. I say the statement is incorrect. He might have been mistaken. I don't say a man is untruthful, and I don't think he could prove in any way that it was a correct statement, because it certainly isn't an impossibility, the movement of 80 degrees of the tool while the shaft was rotating 6 degrees. There are many pieces of mechanism much heavier than that that are moved at a greater speed, and furthermore, I don't believe that he could show that the roller 53 in contact with the cam 44 as the tool was passing around the nose of the camshaft, the roller dropping through space, without touching the master cam while the tool was going around the high point or nose of the cam.

I don't believe there is any truth in that at all. The cams are all designed so that the roller is sliding down an incline. If it were dropping through here, then it wouldn't touch this face of the cam. If it is on an incline, it rolls over there and down that part of the cam. That is the way all cams were designed. If you could see the drawing—I think you have a drawing of that cam.

Q. Yes. I am going into that with you later. A. Yes. I think that will demonstrate just what I mean by that.

Q. I think it will.

The Master: If you have a sharp pointed nose on your cam do you have to have a master cam correspondingly sharper indentation, **(105)** or whatever you call the part of the master cam?

A. The drop, you speak of the drop in the cam?

The Master: Yes. Must that be a much sharper drop if the cam that you are turning is pointed, than if the cam you are turning has a blunt nose?

A. Yes, that is, the angle of this part of the cam from the nose down would tend to be nearer a radial line in one case than it would in another. The smaller the nose of this work piece there would make this nearer to a radial line and of course if that were a radial line and this member fulcruming from this distance away and located in the position it is, why it is quite possible that it couldn't follow

that, because this departs from the position where it would control that, but that isn't true. I don't know of a cam being made that this line here ever went inside the diameter. If I remember correctly, this was one and three-eighths in diameter, and that line from here going down here was always this side of the center, that is, it was not a radial line, and that gave this an opportunity to roll down that face. If it rolls down the face it certainly isn't dropping in space.

Q. If you made it that way could you keep the cutting edge of the tool in the correct cutting position at all times? A. As we demonstrated in the drawing we made for you.

Q. I see. We will examine that a little bit later. A. Yes.

Q. Very well. Then you agree to the 80 degrees of movement of the work holder during but 6 degrees of movement of the work shaft, but you disagree with the balance, is that the idea? **(106)** A. I only agree to the 80 degrees. It looks offhand as though it is approximately that.

Q. "Due to the principle of operation of the Gordon machine, and the impossibility of controlling the tool movement, the tools undercut the side of the cam on the near side of the nose as the camshaft was rotated towards the tools." A. I say that is decidedly a misstatement.

Q. Didn't you testify in the proceeding before Judge Tuttle that at the Ford plant you got hollows on one side and humps on the other side? A. Possibly I did, but I didn't say it was due to the things stated in that sentence.

Q. All right. Then, whatever the cause may have been, the tools undercut the side of the cam on the near side of the nose and left a hump on the far side, that is true? A. In some cases it was, but from an entirely different cause.

Q. Now, go to the next sentence.

> "The rocking motion of the tool holder 34 was retarded by chips that got in between the rotating surface of the tool holder and tool holder base."

That was true, wasn't it? A. Not to my knowledge. I wouldn't say it didn't do that, because that is possible in any cutting tool. Chips get in very peculiar places.

Q. If that did occur, then— A. (Interposing): But after we operated a good many machines there we didn't find that difficulty.

Q. Yes. And if that did occur, however, that would tend, as the **(107)** sentence says, "Which tended to increase the difficulty in keeping the tools at the proper cutting angle." If the chips got in there, in the tool holder 34, that would do it? A. That would be possible, if the rocking member was blocked in any way, why, of course, it would change the angle of the cutting edge.

Q. (Reading): "The springs 59 which governed the action of the levers 52 for rotating the tool holder 34 became weak and broke frequently."

Is that correct? You did have some difficulty with springs breaking? A. We had several springs that broke. Whether it was due to weakness or because they were too stiff, that is the question.

Q. (Reading): "And undue wear on the keys and keyways of the shafts that held the developed master cams 43 and 44, increased the difficulty of maintaining the tools at the proper cutting angles."

You had that difficulty, too? A. I don't know that we had that difficulty. We didn't have—yes, we did. We had to correct position of one cam on that shaft, and whether it was wear or whether it was a misplacement originally, I couldn't say.

Q. I may be mistaken, but it seems to me you testified before Judge Tuttle that some of these keys broke from time to time? A. Well, whether they were those keys I was testifying about, I don't know.

Q. They would be the only keys of any importance in the machine? A. There are many keys in the machine.

(108) Q. Oh, yes, gears and keys on driving and feed gears and things of that kind, but you had no difficulty with any of those breaking, surely? A. I don't remember of it.

Q. Well, would it be your testimony that that is untrue, as Mr. Herklotz testified? A. You are speaking now of what, of the spring 59?

Q. The last three lines of the paragraph, "And undue wear on the keys and keyways of the shafts that held the developed master cams 43 and 44 increased the difficulty of maintaining the tools at the proper cutting angles"? A. No, I don't think that is true.

Q. You don't think that is true? A. No, sir.

Q. If, however, you had testified differently before Judge Tuttle would you say you were mistaken then? A. I might have had a different understanding of the proposition. If this was only wear, the effect would be so slight on the cutting angle or cutting edge of the tool you couldn't find it. If the key was sheared off so that the cam took a materially new position on the shaft, why, that certainly would change the position of the angle. I don't know of a key shearing off in any machine.

Q. Let us go to 37.

"One Gordon camshaft turning lathe costs $4,355."

Is that correct? A. I think it is.

Q. And that is all covered by the exhibits referred to there.

(109) "Date of acquisition of machine 5-16-1923."

That is correct, isn't it? A. Well, I won't say anything about the dates. It probably is correct, but I don't know of my own knowledge.

Q. (Reading): "Date of first use immediately after the date of acquisition."

Is that correct? A. Well, I wouldn't know of my own knowledge, because I didn't see the machine at that time.

Q. All right. A. Either before it went there or after it got there. I assume that it would be used, set up and used immediately.

Q. At least it wouldn't be your position that was untrue? A. No, sir.

Q. Next sentence:

"The machine was sent to the Willard Machine Tool Company for repair and rebuilding 8-24-1923 and was returned to the Ford Motor Company 12-23-1923."

I think you will admit the correctness of that, with the possible exception that you haven't those particular dates in your mind? A. That is correct, as near as I know.

Q. If the exhibits which have already been filed in the case show those dates as given, I think you will agree those dates are correct? A. I would.

Q. (Reading): "It was then finally returned to the manufacturer permanently 7-30-1924."

Is that in accordance with your recollection? **(110)** A. Approximately, yes.

Q. Now, "unit production per hour while in operation, approximately five." A. That is incorrect.

Q. That was testified to by Mr. Herklotz, as I understand. "No permanent cost records were kept by defendant with respect to the cost of producing camshafts on this machine." That, of course, I suppose you don't know? A. I wouldn't have any knowledge of that whatever.

Q. All right. I don't need to bother with the next one. Let us go to 38.

> "The number of tools employed in the Gordon lathe were eight for the F-446 model shaft. The type of tools are as shown in Figs. 6 and 7 of the Gordon patent."

A. I think that is correct.

Q. We had, as you recall, one of those tools down as a physical exhibit during the trial before Judge Tuttle? A. I think that is correct.

Q. (Reading): "Two sets of eight additional cutters were made by defendant Ford Motor Company at an estimated cost of $3.25." A. I think that is correct. At least, I was told that was what was done.

Q. (Reading): "After further operation the tool holders were changed to a square tool bit by fastening a plate on the side of the slide at an estimated cost of $6.50 apiece, or a total cost of $52."

You know about that, too, don't you? I think you testified about that before Judge Tuttle? A. I don't think there was a plate put on the job. As I remember, **(111)** the hole was a squared hole and was drifted into the tool holder.

Q. But the bit was changed? A. It was used on some of them.

Q. You agree to the correctness of it except for the cost given? A. I agree that some of the tools, I think not more than two or three anyway, I think the rest were all the circular tools that were made for the original machine.

Q. Now, it says, "cost of additional tool bits one and one-fourth by one-fourth by one and one-half inches long, 25 cents per tool, or $2 per set."

Does that look like a reasonable cost there to you? A. That probably was. It is only an estimate, anyway.

Q. As to the next sentence, "No written records of these costs were kept and the above costs are estimated." Do you know anything about that? A. No.

Q. (Reading): "39. The tools made as stated in answer 38 were all for purpose of replacing tools formerly in the machine." A. The tools made by the Ford Company?

Q. Yes. A. Yes.

Q. Now, number 40. "The repairs and maintenance of the Gordon machine, as described in question 36 involved the time of two men 16 hours a day, not including production and tool room, foreman's supervision during the entire tryout period of approximately 200 hours actual running."

What do you have to say about that? A. I would say that was entirely wrong. During my time there were **(112)** many days that no one was anywheres near the machine, other than myself and an occasional time when the foreman of the department, the grinder department, came over and talked with me about the work, but there was nobody around.

Q. All right. A. Not one man, let alone two.

Q. You heard the testimony of the man, didn't you, in the main case, in which he said he was assigned to those machines from the time you first came, until the machines went out? A. Maybe he was assigned, but he was not there. Those things happen in a shop.

Q. 41 and 42 we can gloss over, because you don't know anything about the records of the Ford Motor Company. With respect to 42, I believe in answer to a similar question relating to the Walcott machines, that that was admitted by plaintiffs, but it appears they denied this that has to do with a record kept by the Ford Motor Company.

Mr. Spohn: We deny its materiality.

Mr. Farley: Well, the point is, I believe, as to whether no records were kept of individual power consumption of individual machines, that was admitted so far as some other machines were concerned.

Mr. Spohn: The Walcott machine particularly. That was relevant.

Q. 43. "There was no operation prior to roughing the cams except that defendant rough ground the contour of approximately 120 camshafts to present an even amount of stock for Gordon lathe to help and improve its operation."

(113) Do you know anything about that? I think you testified you had some difficulty because of the dies in the foundry leaving too much flash, or something, and some of them had to be ground? A. What we call snagged.

Q. Snagged? A. Yes. It left so much metal there where the forging dies came together, it left what we call a flash, that the amount of metal, the depth of metal that had to be turned off was from a very light amount to as much as three-sixteenths of an inch.

Q. So that they did do some rough grinding? A. I don't know how many they did. It was not my recollection that they ground anywheres near that quantity, but I did run a number of them through the machine, just snagged that off in the turning machine, and then set it for the finish sizes. I wouldn't say how many now I did that to, but there was some of them snagged.

Q. Of course, you would not agree with the number and the estimated cost of doing that, I assume? A. Well, there was something wrong if they cost that much.

Q. Now, "the amount of shafts scrapped due to poor machining on lathe approximately 60 percent." What do you have to say about that? That is something apparently that you would not know anything about, is that true? A. I wouldn't know anything about the ones that were turned the first time the machine was there, because I was not there, and the ones that were turned while I was there, there was some of them scrapped. Just how many I wouldn't say, but I wouldn't **(114)** say it was 60 percent or anything like that.

Q. "44. The operations performed on the cams of tractor camshafts subsequent to work thereon by the Gordon machine were substantially the same operations—" Now, this was amended. We substituted a new paragraph for that. "Were substantially the same as shown on operation sheet Exhibit No. 17, except that due to the necessity of leaving a greater amount of material on the cams for operation No. 23, finish grind cams, the time required for operation No. 15, 'harden' had to be increased to insure a deep penetration of the case hardening, and as more material had to be removed, the time of the finish grind cams operation was necessarily increased."

Do you know anything about that? A. Yes, sir; I know very definitely about that. When we operated the

machine while I was there, our endeavor was to keep the amount of stock below twenty thousandths. That would be ten thousandths on a side. On the Melling machine, when it was in operation in close proximity to our machine, I checked up some of them, and they ranged anywheres from fifty to sixty thousandths on both sides, which meant from twenty-five to thirty thousandths on a side.

Now, by that time our machine had been condemned. We were trying to hold it to very little grinding, according to instructions.

There was nothing on the drawing, and the only information we had was our experience with other manufacturers, and that was what was ordinarily done. I don't know of a single manufacturer where they pretended to leave any such amount of stock **(115)** to grind as they did at the Ford Company, for the reason that practically all of the camshafts were carburized for hardness and that means it left a case around the outside of the shaft, a hard case, and if you ground that much off, you would grind through that case. Otherwise, you had to carburize so deeply it was an expensive operation. It was done by putting the shafts in a pot with carburizing material and keeping it up to comparatively high heat for many hours.

Q. If the Gordon machine left a hollow on one side of the cam and a hump on the other, that would increase the necessity, would it not, to have a deeper penetration of case hardening? A. Yes, sir; anything that departed from the correct shape of the cam so as to leave a uniform amount of material to be ground off all the way around would, of course, necessitate deeper carburizing.

Q. I think that is all of the answers that have to do with that particular phase. A. All right.

Q. A while ago you said, Mr. Gordon, that the hump on one side and the hollow on the other side did not come from the statement made in this answer, which was that due to the principle of operation of the Gordon machine and the impossibility of controlling the tool movement, the tools undercut the side of the cam on the nearer side of the nose as the camshaft was rotated towards the tools and left a hump upon the far side of the nose. I was reading from page 13 which is part of the answer to paragraph 36. While you admitted there might be humps and nicks, you said it did not come from that reason. Do you know why

that **(116)** happened, the humps and hollows? A. I have a pretty good idea and also a pretty good idea of why it couldn't have happened for the reason you have given. I would like to show that to you and the Master, if you care to look at it.

Q. Very glad to.

The Master: Just a minute, before you do that. Is it defendant's contention that the reason it was necessary to leave a greater amount of material on the cams for the semi-finished grinding operation was because of the fact that the Gordon machine left a hump on one side and undercut on the other side?

Mr. Farley: Yes.

The Master: In other words, you left a larger, according to your contention, you left a larger amount of material for the finish grinding process to correct that?

Mr. Farley: Yes, because you can readily see if you have a hollow in the face of the cam, like this, instead of the correct shape, that would have to be cleaned up thoroughly in the finished grinding, so that you got the exact contour provided, otherwise your valves would not operate properly and it is very imperative that you get the exact contour provided for in the finished drawings. Of course, then, in order to get that, you had to leave a greater amount of stock to make sure that you cleaned up.

Now, then, if you had a hump on the other side and you left a great deal of stock to clean up, you know that on this case hardening operation, the penetration is very slight, just a few **(117)** thousandths. Here the penetration would have to be 25 or 30 thousandths. If you had a hump on the far side and it was 30 thousandths and you had to grind away all the case hardening there in that place where there was a hump, you would have a soft spot in the cam. You agree with that statement?

Q. Yes, but it is a little bit general. It is not true. I would like to explain to you why it is a misstatement.

Now, this member here carried the tool, and the tool point is fixed in this swinging arm, relative to the arm. That is, the tool is built like this and it swings around that

point. That point isn't running up and down and in and out or anything else. That whole member there swings around that tool point like that (indicating).

The Master: Yes, sir.

A. So that never varies in relation to the rest of this arm. Now, here we have a cam, this dotted line shows a cam that controls the swinging movement of that member.

The Master: Yes.

A. Now, if that point is fixed in the arm and the arm is swung a point up here, this tool or this arm can't at any time come in beyond what it is supposed to be in getting the form of that cam.

If this roller here pushes this in, pushes this arm in, that is, the spring here is what holds it back against this cam.

Now, the tendency there is at all times to hold that roller against that master cam, which makes the form of this, regardless of the angle of the tool cutting edge of the tool. **(118)** The point is under the control of this dotted line cam.

Now, then, the angle of the tool is made by this other cam, and if we have got the wrong angle of that cutting, that would tend to push away, or something of that character, but this cam here is the one that controls the shape.

Q. All right. In your machine, the tool is held back or the piece which carries the tool is held back so that the cam which controls the contour and regulates the point of the tool which you have just been describing to Mr. Quaife is affected by this spring 49, isn't it? A. Yes, sir; controlled by that spring, yes.

Q. And if the work coming around your tool is not at the correct angle, the only thing which would prevent the tool from gouging into the work and making a nick on that side would be the functioning of the spring 49, isn't that correct? A. That is correct. This is the only thing that keeps that from departing from that position that would make a difference, but there isn't anything to make it do that, that is, in this member here or the rest of the mechanism, the thing that would make it do that was the fact that on the work cam—let us make a picture of it here.

There is the cam. Now, if the flash, that is, if that were forged and that were the parting line between the

two dies, the metal that squirts out here and here is what makes the flash, and that flash, if the trimming dies cut that off there and cut it off here, you would have that much more metal.

This is the finish size in there. You would have that much to cut off instead of that much, and they spring the shaft **(119)** and do everything else when you try to cut all of that off at one cut.

The Master: In other words, you would attribute the difficulty in the hump or hollow on one side to the fact there was too much flash?

A. Very irregular amount of material to be cut off the cam. Some places there would be a great amount, and others a very slight amount. There are eight cams being cut. The effect of one cam, by the cutting pressure on the adjacent cam or some other cam in that proximity, would have an effect on springing that shaft.

When I went in there on that job, I found that the center bearing on the shafts which ultimately you turn varied so much that I couldn't get some of them in the steady rest to hold it in that position. The steady rest on the center bearing of the shaft, and others were so loose they could flop all around. There was no control of them. That is within many thousandths. Now, if they could flop around in there, then of course you get any kind of an old piece, because it was to a large extent due to the pressure of the cutting tools and the variations in the amount it had to cut off at different points.

That cam is here and the next cam might be over here. The tools were all cutting on one line.

If this was getting a heavy cut here, it would affect the cut on this part here. This part here, the base line of the next cam, wouldn't affect this one up here, because it wasn't cutting up there at that time, but when it is turning the top only and there is a great mass of material to come off there, **(120)** that is going to affect the cutting of this one.

It is not very easy to explain all that without a cam there so that I could illustrate it, but I don't happen to have one.

The Master: Did you observe the operation of the Walcott machine while you were in the plant?

A. I spent weeks watching it. I watched the operation of that. I have watched the operation of them since the first one was made. Mr. Melling invited me to see it operate.

The Master: Did they furnish the same type of camshafts to be finished in the Melling machines?

A. Yes, sir. And the reason why they were able to do a different job than we were, was because they took that in two cuts. They first took a rough cut and the machine automatically went back, the tools went into the finished position and took the second cut, and the second cut on that cam was a comparatively light cut. I don't think they averaged 1/32nd of an inch deep, and it was fairly uniform all around. On the rough finish it varied 500 percent in the depth of the cut at different points on the cam.

The Master: Do you know enough about forging operations to say whether in your opinion the rough forging operation of the Ford camshafts was inferior in quality; as to whether they could very simply have forged them in such a way that they would have been suitable for your machine?

A. Anything that you do on the forging dies for a piece like that shaft is expensive, because they are quite heavy and they are hardened and quite expensive material, and they let them—they **(121)** use them as long as they can without getting beyond possible means of machining them, but I have seen shafts in some shops where they left a great deal more metal than they did at the Ford plant. There was one plant where we had two machines and we made no pretense at all in cutting it in one cut. We deliberately run them through with two cuts; put them in the machine twice.

Q. That was the Studebaker, wasn't it? A. No, at the Reo, and I asked them to try to get them to correct the dies, and they told me—I don't know as I ought to say it. If you want to know, I will tell you. They told me the management there was interested in the forge plant and they refused to correct the dies. We have 5/16ths of an inch to remove. Anyway, that is the condition. The Ford dies, the forging dies, when they were new, I think, were equally and maybe a little superior to the average, but like every-

one else they let them wear until they got to where they felt they shouldn't re-sink them, and I don't think Ford was any worse than anybody else in that respect, because it was a question of how much does it cost and what benefit do they get by re-sinking them.

Q. Now, Mr. Gordon, I don't recall anywhere in your answer, although you would not agree with the statement in our statement of account, that the principle of operation of the Gordon machine, and the impossibility of controlling the tool movement had anything to do with the tools undercutting on one side and leaving a hump on the other, I don't recall that you gave any explanation as to why that would occur? A. I just got through trying to explain it. It was due to the **(122)** irregularities and the amount of material that had to be turned off the cam.

Q. Due to the flash? A. Due to the flash largely, or to the way they were centered.

Q. Just where is the flash located? Is it located up there on the nose of the cam? A. It was right on the side of the cam in some cases. On others, it is on the base. The Ford cam had a flash like that, right on the side of the nose of the cam. That tool coming around there would get hold of that and spring that shaft.

Q. That was on some of the cams only? A. Absolutely. The flash, that is, the parting is always on one plane. The parting, I would say, was across there. Now, then, you couldn't get a flash on this one up here, because no flash was made there, but there would be a flash on this side and a flash on the nose, and when we attempted to turn that off, if there was excess metal there, of course it would disturb the location of the shaft or spring it. That was one of the reasons.

The Master: With a given amount of flash on two different camshafts, one of which requires a very sharp nose and the other one of which requires only a relatively blunt nose, is the tool more likely to be sprung with the sharp-nosed camshaft of the cam than with the other one? Is there any relationship there between the pointedness of the nose and the likelihood of getting into difficulty of this sort?

A. Well, I would say in a general way that the sharper the nose point, the more difficult it was to turn it, just the

same as **(123)** you had if a piece were perfectly cylindrical, why you wouldn't have that varying condition at all. What makes the variety or the varying condition is due to the nose of the cam, and, of course, when you are travelling, when the tool is cutting up this side, the condition is somewhat different than it is around the base line, and when you are setting it on the other side it is different again. The same as it is on the Melling machine. The speed of cutting on the Melling tool is very rapid going up the sides of the cam and very slow in going around the nose of the cam.

Now, people have been trying to use that as a reason why the Melling machine was better than the Gordon in this Ford case, but you have one advantage and one disadvantage.

The 100 percent condition would be where it was perfectly cylindrical and the conditions were the same all the way around.

When you have got to sweep the cutter up the side this way and then go down with the point and then sweep up again on the other side, why, you have got a condition that certainly isn't very good.

Q. (By Mr. Farley): On that point, Mr. Gordon, I have made a couple small sketches, and I will have this marked Exhibit 208. I think 207 was the last one.

(Sketch marked Exhibit 208.)

Q. And I will mark the first figure Fig. 1. Now, I have attempted to represent a circle. It was drawn freehand, and I will mark this one rectangular thing T, supposed to represent a tool of the lathe. Now, assume you are cutting the circular piece you have been talking about, the ideal condition, is it not, for **(124)** effective cutting is to have the tool located so that a tangent passing through the point of the tool, your tool is located substantially normal to that tangent, of course, making allowances for whatever positive or negative rake you are going to give the tool. That is the theoretically ideal condition, isn't it? A. No, I don't think it is. We very seldom see that in actual practice, where the tool is held in that normal to the tangent; very seldom see that.

Q. You are talking about having a rake where I am drawing now? A. It might be a rake and it might be the

other way. For instance, may I make a sketch on this? You have already got a dotted line out there. That shows the diameter of the rough work.

Q. That is right. A. Now, then, this tool is cutting from here to here. It is reducing the stock to that depth. It is not doing that with the point of the tool. It is doing it with the side of the tool and it is the relation of the tool to the material that it is removing that is the important thing.

Q. Yes, but— A. (Interposing): That is true, isn't it?

Q. Yes, but if you vary your nose of the tool—I will make a sketch over here on the right-hand side of the sheet, upper right. Now, if you vary your tool, and I have drawn the tool with a very sharp rake, and I will mark that tool T-1, and I will mark the part which we call the rake R. I will mark this other part, the inclined line to the vertical C. The part R is what is called the rake, that is true, isn't it? **(125)** A. What kind of tool is that?

Q. It is cutting on the front and side? A. Is it cutting on a radial line or is it cutting longitudinally of the cylindrical part?

Q. The same kind of tool we have been talking about. Assume the tool on the far side from what is shown on the drawing has a cutting edge that is going to cut on the side, and you make some clearance to do it that way and you give it a side rake such as I have sketched here below. I will call the first one Fig. 2 and I will call the second one Fig. 3. Now, this is a view looking towards the front, and the tool, as we assumed over here, is going to be cutting on this edge which I mark SE, side edge, and also is going to bring the work to its finished diameter upon the point which I have marked P in Fig. 1 and point which I mark P in Fig. 2. You are familiar with a tool of that type, aren't you? A. I am familiar with a tool as you describe it, but not as you draw it. I will see if I can make a little sketch that will probably help. Now, there is a tool that cuts this edge. This edge is higher than this edge. You see that, your Honor? This is looking straight at the side of that tool, this edge here being higher.

Q. As shown in this figure here? A. Yes.

Q. Figure 3? A. That tool is higher on this edge, and the work, the material it is removing, we will say, it is up

to there, and the finished material is down to here, so that this edge along here is doing **(126)** the cutting.

The Master: It is higher on the edge.

A. That is doing the cutting. This one is not. This one here is higher on the point which is not doing the cutting.

Q. You are indicating that line that I drew which is supposed to represent the same thing? A. I didn't say that line.

Q. I am assuming a tool with a sharp point, and you are assuming a round-nosed tool over there in your Gordon machine, but you used a sharp-pointed tool in your Gordon machine? A. You could have used a tool like that.

Q. Well, now, assuming a tool of that type, set your tool so that your reaction of work being removed will be substantially along the same line with the tangent at this point, that is the ideal condition, isn't it? A. I wouldn't say that, no. The point is you have got to have metal being removed, you have got to have that so that it is cut off it rolls away from the finished work.

Q. Suppose, instead of having your tool as I have sketched it in Fig. 1 with the reaction between the tool and the work being removed, the excess stock being removed, is not located on the tangent, but the tool is located off at an angle so that the reaction on the tool would be as I have drawn it by a dotted line or a dashed line which I have marked L, what would be the result of that sort of a condition? That is not the condition you want to have, is it? A. I don't just get the picture you are trying to tell me about.

Q. Suppose you have your tool extending in on this angle which I **(127)** have marked N, that is what you would call a negative angle, isn't it? A. If this was the edge on this tool that is removing the work, and instead of your having it higher, you had it lower than this side, why, you would call that a negative angle. It wouldn't be cutting. It would be more or less pushing.

Q. And if the tool were around the other direction which I have marked, drawn the dotted line N′ necessarily the tendency would be to push away from the work? A. Yes, the negative.

Q. Whereas in the second case the tendency would be for the tool to dig into the work? A. What we call hog in, yes.

Q. Now, the ideal condition is, however, to have your tool so that the reaction between the tool and work is along the tangent, that is the reason for having the tool normal? A. Yes. It very seldom is normal. They try to make a free cutting tool that will have a positive rake in cutting steel.

The Master: Didn't you state once the ideal condition with your machine was for a line between the point of the tool and the center of the circle from which the tool projected would be normal to the tangent, to the cutting point?

A. I don't know whether I said that or not. I don't think I did, but I did say that the cutting edge on that tool is positive to the material that it is removing, and it has very little bearing on its position in relation to the finished surface, that is, the finished diameter. We will take, your Honor, supposing you took a piece like that, that is, a flat piece of work and your **(128)** tool comes down here and this edge is higher than that edge, and it is cutting this back, we will say it is taking cuts off like that all along on a flat surface. This edge being higher, why of course it would have a positive rake to this much material. Now, it wouldn't be very good to have the point behind the raise of the cutter, because it would tend to curl or sweep down into this, which would cause it to choke up and drag. That is looking at the other angle, you see. That is normal to this surface. If that tool edge were cut back like that, why that would be a negative, that is really in relation to this surface, and it would tend to make the piece curl and interfere with this finished surface, and if you had it out this way, if that tool was higher and struck first on the point, it would have a tendency to curl or chip away from this. It wouldn't come in contact with this at all. To some extent that is the ideal condition, to have the point of the tool have a slight positive rake in this direction, and as much rake as the material will permit the tool to have in the other direction.

Q. In connection with the ordinary operation of lathes, the power which produces the cutting necessary to perform the cutting operation comes from the rotation of the work

piece around the axis of rotation, that is correct, isn't it? A. It doesn't come from that.

Q. You are driving your work in a lathe in the usual manner by a chuck. A. By a motor of some kind or external drive that drives the work. It doesn't come from here. It comes from some other source.

Q. Take your own machine, the power is applied in this machine, as **(129)** you show it here, where, either Figure 2 or 1 will do. A. This is the pulley here.

Q. The power is applied by this mechanism? A. It is applied to this gear and from there to the gear and over to the master cam.

Q. In other words, the power is applied to the tool shaft by means of a chuck which grabs this left-hand end of the work piece and the cutting force, the force which results in the cutting of the tool comes from the rotation of the work piece by means of this power mechanism? A. That is correct.

Q. So your cutting force is then exerted in the lathe by the exertion of power to one end of the work piece? A. That is correct.

Q. Your cutting action comes from the rotation of the work against the stationary tool? A. That is correct.

Q. Now, then, let us look at your Gordon lathe which I represent by the figure which I have marked 4, and we will take that figure as representing the condition which should exist when you are cutting a cam as that cam is approaching the nose and I have drawn the tool in substantially the ideal, normal condition. Now, the work is rotated about this axis which I will mark "O" and out at this point where the tool contacts with the work, which I mark P. You are whipping the work piece at that point through an arc of movement, which I draw through the point of the tool and which I have marked A, and effective force exerted by the work on the tool to do the cutting is **(130)** exerted in the direction of the arc A, isn't that correct? A. I don't think you have stated it correctly, no.

Q. Well, just a minute now, let us get this. Here is your point of rotation? A. Yes.

Q. If your work piece is being rotated by being grabbed at the end, that is your center of rotation? A. Yes.

Q. The point which I have marked P is the point where the tool is contacting with the work? A. Yes.

Q. At that particular point, considering that particular point of the cam, that is when the tool is contacting it and swinging through that arc A, isn't it? A. No.

Q. Why not? A. Because you have got this member here which tends to pull the tool in that direction, towards the point of the work.

The Master: Mr. Gordon, may I make this general suggestion: When you are testifying you have a tendency to refer to different points which you don't get down on the record. You say this and that and point to the thing. Try to designate more definitely.

A. All right.

Q. I probably should have drawn this a little better, but in your Gordon machine, your tool swings always. The trouble is I have shown this a little bit too high, but your tool swings always on the arc through the center of that shaft 24? **(131)** A. This one here.

Q. That passes through the center of the work piece? A. Yes.

Q. So then, any movement of this tool here is definitely and substantially a horizontal line back and forward to the axis of rotation of the work, that is correct, isn't it? A. Yes. May I show that? I want to get the thing so that it is understandable. You admitted you had it wrong. If we put a line through here and call that the horizontal line, then we can see what it is all about.

Q. Very well. We will do that, then. I will draw a dot and dash line here. I have drawn roughly a dot and dash line which I mark D which is supposed to represent the path on which the tool is travelling? A. Yes.

Q. In the horizontal. Now, then, assuming that, the question is, isn't the reactive force the force which causes the cutting of the tool on the work at the point P being asserted on this arc of movement which I have drawn A? A. No.

Q. Where? A. Well, for the finish work you have got two directions of movement. You have got a rotating movement here of the work and you have got here a swinging motion. It is a combination between this rotating motion and this motion. If you had just a rotating motion you

wouldn't get that shape. You have got to pull that tool up that way. You have got two directions you have got to consider.

Q. The movement of the tool back and forth here is very slow, isn't **(132)** it, that is, the movement of the tool effected by the cam 43? A. What do you call slow? You have got to move it from the base line, which might be here, considering that as a circle, you have got to move it from here clean out to here and back again while this rotates from that point to this point.

Q. Your principal force here in performing the cutting action comes from the rotation of the work piece? A. Correct.

Q. And that force, insofar as that force is concerned, it is exerted again on that curved arc A, isn't that true? A. Yes.

Q. And you have then, according to you, a component of cutting force which comes by moving the work piece or the tool holder 23 backwardly about the axis 24 under the influence of the spring 49? A. Correct.

Q. Now, the ideal condition would be, would it not, Mr. Gordon, to have that force exerted along the line which I have drawn an arrow at the bottom of it and which I have marked T; that would be the condition that would parallel the situation in the view shown in Figure 1, isn't that true? A. No, it is not. You have got a condition here. This member here is rotating about this center. Now, this space here, the side of the cam, is constantly changing in relation to the position of the tool, and that is the reason why we have to change the angle of the tool from the time it leaves here until it gets around here. We have got to change it all the way around and back again, so it is always changing so you can't say it is in that direction, because there is only one moment it is in that **(133)** direction.

Q. Wait a minute. Just confine yourself to the conditions I have sketched here. We are talking about things at this particular moment while the tool is doing the cutting at the point P. At that instant the principal force to do the cutting comes from the arc of movement which I have just drawn as A and which is directly on the point of the tool, isn't that true? A. No. I think you are mistaken about that, because the direction of the cut must

be in that direction to remove that material. You can't take a cut off the side of that by pushing this way. You have got to take the cut in the direction of the metal that you have got to remove, and that is in this direction. At that particular moment the stress of cutting is in that direction.

Q. Just a minute. When you say the stress is in this particular direction you have pointed to the line which I have drawn and which I have put the arrow T? A. Yes.

Q. That is an ideal condition. If the stress were in that direction you would have the ideal condition, wouldn't you, the principal stress to do the cutting? A. Yes, on a stationary piece.

Q. One a rotating piece? A. You have got a combination of the rotation of the work and the pull of the tool by these members here.

Q. Yes. But consider just that point. Your work is sweeping down on the point of the tool with an arc of movement that I have drawn at that particular point, and that is moving through **(134)** the arc I have drawn A. Quite obvious, isn't it? A. The point of the tool isn't moving at all? Theoretically it is stationary. You said point of the tool?

Q. I say your work at this point where I have marked P for the point of the tool, the work is swinging through this arc of movement to do the cutting at that particular time where I have marked the letter A on the arc? A. Yes.

Q. And the principal force for performing the cutting comes from the rotation of the work, and that particular point of the work in swinging through that arc, isn't that true? A. Well, that is a question. That force changes. It is the constant change from the base line of the work and the cam work right out to the point where it goes around, because you are pulling up that way and down that way. It is a component of those two movements.

Q. This changes force as your tool moves along there, and as you approach closer, the closer to the nose of the cam, the arc through which the work at any particular point is swinging the parts more and more from the tangent position and reaches its most acute condition just before

you get to the nose of the cam, so that you have a vertical change, instead of being along the theoretical tangent, is more like the condition over here at the mark N′, isn't that true? A. No, because here you have got a fixed tool position at N and N′, and one is negative and the other positive, whereas on this you are supposed to have a reasonably constant tool position regardless of where it is on the cam. That is the purpose of the machine.

(135) Q. And your reasonably constant position is supposed to approach as nearly as possible the position of the fixed tool position? A. Yes, whatever that fixed tool position is that is desired and that it is set up for.

Q. Let us assume again now a position on the other side of the cam, and I will just dot in a tool over there. That is supposed to represent a tool, if you can use your imagination to that extent, and over there. Then assuming your work again, a point P′ of the work, your work on that side, with the tool swinging through that arc there rapidly? A. You mean the work.

Q. Thank you. With the point being cut. A. Point of the cam.

Q. The point of the cam being cut at that point? A. Right.

Q. Is swinging rapidly away from the tool on the arc A, isn't that true? A. The point of the cam is, yes. The tool goes further up that side of the cam, the receding part of the side of the cam.

Q. Yes. And the tool at this point which I have marked P, the speed of the work swinging down through that arc A on to the tool there is rapidly approaching its maximum speed, that is true, isn't it? A. It does reach the maximum speed at the extreme point of the cam.

Q. That is right. Whereas, on the point exactly opposite it would be the same. Now, you said you are familiar with the Gordon machine or with the Walcott machine. Do you have any condition **(136)** at all like that in the Walcott machine? A. Not identical to that.

The Master: With your machine, the work piece as a whole is rotating at uniform speed?

A. Yes, sir. That is true on all the machines, Walcott, Gordon.

The Master: Okay.

A. Or Pioch or any of those machines. The rotation is uniform. That makes the cutting speed vary according to the distance it is from the center of rotation.

The Master: Go ahead with that.

Q. As a matter of fact, in the Walcott machine you have the—

The Master: Was the Walcott tool a side-cutting tool?

A. Yes.

Q. (By Mr. Farley): Now, I have drawn another Fig. 5 and we will assume this is a Walcott tool which I will mark T-2, and we will mark this point here PP, for pivot point of the tool. Now, in your Walcott machine, it is a fact, is it not, that as the tool which I have attempted to sketch and mark T-2 is pointing its—after the cam, rather, is rotating in the direction of the arrow towards the tool, that as the cam to be cut, as the side of the cam reaches the tool and the nose is approaching, the Walcott tool is swung upwardly around the pivot PP, in the general direction of the small arc of the circle which I mark S, that is true, isn't it? A. Yes, sir.

Q. And isn't it true, then, through the entire operation of the Walcott machine, due to that upward swinging movement of the tool, the reaction between the tool and the work is substantially always on a tangent line, similar to the tangent line which I **(137)** mark tangent in Fig. 1 and similar to this S, which I have drawn the line and marked tangent, isn't that true? A. What you mean, I think, is that it is normal to that tangent. Is that what you mean?

Q. I am speaking about the reaction? A. The point of the tool, of course, is always on the tangent line.

Q. I am talking about the reaction between the tool and the work when this tool is doing its cutting as the tool passes up and cam comes down, the force exerted by the work in its rotation against the tool and the movement of the tool is such that the cutting edge of the tool always insures that that reaction will be along the tangent line, similar to the ideal condition as shown in Fig. 1, isn't that true? A. I think that is correct.

Mr. Farley: I will introduce that sheet as Exhibit 208, please.

The Master: It is admitted.

(The sheet above referred to was marked Exhibit 208.)

The Master: Would you say that with the Walcott machine the tool or the movement of the tool and the work piece was slower as it went around the nose of the cam?

A. Let me explain this, your Honor. We will say that that line there makes the cylinder of that.

The Master: Yes.

A. Now, then, here is the nose, it starts here. Now, this tool is normal to a tangent of that circle.

The Master: Yes.

A. While it is cutting. The circle and the movement, it starts **(138)** to cut up the nose of the cam, then rapidly shoots up that side and it meets that, you see, that nose would be around here. Then when that has swept up that side, then it goes from here around there. What is the arc of the nose of your cam, one-sixteenth?

Q. (By Mr. Farley): One-sixteenth on the Model F. A. Then it goes around from here to here. The point of the tool follows that, and from that point there clean around to here. That tool hasn't any cutting to do except from this point to that point, see? Which is a pretty big section of the rotation of the work, and as it gets down there, that tool is up there, and then it has to rapidly sweep up here. If it didn't go up at terrific speed, this would leave the point of the tool and wouldn't cut at all. It must go up very rapidly from there to get up to that position. First it goes up that way at high speed, and from there around there. That is the rotation of that. It hasn't anything to do except to cut right around here. As soon as it gets down around the extreme nose of the cam, around that little radius there, from then on it has got to sweep up there at a terrific pace to get back to this point again.

Q. Incidentally, there is a backward motion of the tool, as well as an upward motion? A. Yes, surely.

Q. In both machines. Now, Mr. Gordon, in view of your talk about the rapid motions of the tools, if a cam were provided with a mathematically, or as nearly mathematically sharp point on the nose as could be machined, it would mean that the Gordon machine **(139)** in attempting to cut that nose would have to go around the thing instantaneously, wouldn't it, to get the proper cutting angle? A. If you had a knife edge, you mean?

Q. Yes. A. Yes, depending, of course, on what the included angle of the cam nose was.

Q. With the Walcott machine, if the side of the cam, the riser part of the cam, and between the circle and nose, if that were perfectly flat, then the Walcott tool would have to go up there in nothing flat? A. Pretty close to it.

Q. So far as that is concerned, that is a marked difference between these two machines, isn't it? A. In the actual cutting, yes.

Q. Now, you have seen the Walcott machines, have you not? A. I have.

Q. And you are also familiar with this patent number 1,655,655 to Herman W. Melling, granted January 10, 1928? A. Well, I haven't studied the patent. I know the machine quite well, though.

Q. And the structure shown in that patent drawing is a correct representation of the Walcott machines as used by the defendant, is it not? A. As I have seen them, it is, yes.

Q. As a matter of fact, the exhibits filed by the plaintiffs here, request more particulars or interrogatories, I have forgotten just which, showed photostatic copies of the Walcott or Melling drawings as contained on pages 992—they were introduced as Plaintiff's Exhibits B-1, B-2, 993, B-3, 994, B-4, 995. **(140)** They are quite obviously photostatic copies of the drawings of the Melling patent, isn't that true? A. I think they are.

Q. Now, the Melling patent was granted, as shown by the face of the patent, on January 10, 1928? A. Yes, sir.

Mr. Farley: I will ask this be marked, this patent be marked Exhibit 209, please.

(The patent above referred to was marked Exhibit 209.)

Q. And the Gordon patent was granted some time in June of 1925, that is also correct, isn't it, June 16, 1925, Plaintiff's Exhibit 2, shows as being the date of issue? A. Correct.

Q. Now, if you will refer to Exhibit B-2, the one marked Exhibit B-2, and reproduced at page 993 of Volume III, which you will agree is a correct representation of the Walcott machine. Now, that shows, does it not, a work piece to be cut, a camshaft to be cut and represented by the reference character 3 and to which 25′ is directed to the cam? A. Correct.

Q. And the tool is designated by the reference character 18? A. Yes.

Q. And you have a second camshaft which is shown by the reference character 23? A. Yes.

Q. And immediately behind that you have a roller to which the numeral 27 is directed? A. 26, isn't it?

Q. 26—27, apparently. **(141)** A. I see.

The Master: It is 26, isn't it?

Mr. Farley: Yes, 26. Thank you.

Q. Now, those parts are mounted on a reciprocating carriage that travels to and from the axis of rotation of the shaft 23 or 25′? A. That is correct.

Q. That is correct, isn't it? A. Yes.

Q. Now, there is on that reciprocating tool carriage a tool holder pivotally mounted on the carriage and the tool holder is the part having the roller at the end, I think it is designated by the reference character 15, and carries the tool 18? A. Correct.

Q. That is true, isn't it? A. Yes, sir.

Q. And there is in that machine a master cam corresponding to the shape of the work to be cut; that is the part 23, is it not? A. Yes, sir.

Q. Now, there is also an abutment roller co-acting with said master cam for controlling said carriage. The abutment roller is the roller 26 and it controls the carriage. I don't know what the number of that is, probably 11. A. I think that is the carriage, isn't it? Yes.

Q. That is true, isn't it? A. Yes, sir.

Q. Now, the radius of the abutment roller 26 is the same as the radius described by the arc of the cutting tool in this construction, **(142)** that is also true, isn't it? A. Yes, sir.

Q. And that cutting tool and tool holder 15 pivots about the bolt, or whatever it is supposed to be? A. 16.

Q. Is that 16? Then we have got two 16's in there? A. I don't see any other 16.

Q. Yes, 16, that is right. Now, then, there are means for oscillating the tool holder, being the part 21, which co-acts against the roller 20 and oscillates the tool holder 15, that is also correct? A. Together with the spring.

Q. Yes. A. I don't see a number to that.

Q. And this means for oscillating the tool holder, does it so that the point of engagement does it so that the point of the cutting edge of the tool of the work, that is, the point where the cutting edge of the tool engages the work, the cam 25′ corresponds to the point of contact of the abutment roller and the master cam; that would also be true in this machine? A. That is the purpose of the construction, yes, sir.

Q. That means that as the master camshaft 23 rotates the point of contact of the work or of the master cam with the follower roller 26 will travel upwardly as the parts move from the position in which they are shown in this particular Fig. 2 of this sheet 993 of the exhibit book, that is right, isn't it? A. The rotation of the master cam is anticlockwise from this view. I beg your pardon. Clockwise, and that would travel up the **(143)** abutting roller 26 up to the extreme, or not quite to the extreme end.

Q. And as that moves upwardly the tool will likewise move upwardly in synchronism with it? A. Yes, sir.

Mr. Farley: Right there, if your Honor please, I would like to state, for the purpose of the record that I just read to the witness one of the claims of the Melling patent which was granted and which constituted the patentable improvement that the Patent Office recognized in Melling over Gordon, and I could read many more claims here, but I think we can save time if I don't.

Q. (By Mr. Farley): Now, as a result of that movement that I just described, you have the condition of the reaction between the tool and the work being along the normal line such as I have drawn in this Figure 5, isn't that true? A. Its action on the leading side of the cam would be in that direction.

Q. Now, if the action of the tool, reaction of the work against the tool, as I have shown in Fig. 4 would result in the hollow or nick being formed on the leading edge of the cam in the Gordon machine, the difference of the mode of operation in the Walcott machine would avoid that formation of the nick, and to that extent the Walcott machine would be an improvement over Gordon, isn't that true? A. No, it would not. If the same work, that is, if there is any error in the shape produced by the Gordon machine, the same error was in the Melling machine.

(144) Q. We are not assuming any errors in either machine? A. Then they would both make a perfect job.

Q. Now, in the Walcott machine, in the Gordon machine, with this condition, I think you have admitted that considering the tool sweeping through that arc A, your condition of tool to work and reaction between the tool to work parallels the situation shown by the line N′ in Figure 1? A. No, I have denied that very specifically, either N or N′.

Q. You must have inadvertently said yes, then, or I would have followed that further at that time? A. I claim those were incorrect, both of them, both N and N′. At no time do we reach a condition like that in the Gordon machine.

Q. Such as I have sketched up here? A. In N and N′, or whatever Fig. this is.

Q. That is Fig. 1. Exhibit 208, Fig. 1. Then that, of course, depends upon how much the unavoidable error might be in your machine. Is it due to the fact those lines are drawn at a very much greater angle? A. In one position at N, you have a very negative rake to the tool and in N′ you have a positive rake. I would call that a positive rake, because it goes above the center, and this one here points way below the center. Those conditions do not exist in the Gordon machine.

Q. They don't exist at any such angle as I have shown? A. Yes.

Q. They may exist but to a smaller angular variation? A. Yes, sir.

Q. You are not in a position to state now, or do you still testify **(145)** now, that the angular variation such as you showed on the sketches, I think they were MM and NN, is the limit of error that would occur in your machine in

turning the Ford cam? Do you still insist that is the maximum that would be in that machine? A. With that design of cam.

Q. All right.

The Master: Does the Walcott machine eliminate any deviation in the angle of the cutting tool to the work piece?

A. It does, provided that this cam here does not control this cam here. This cam here in contacting this roller here determines the position above or below the center line of the work, and if that cam isn't correct, and the position doesn't, of the tool point, does not correspond to the point of contact between the master and this abutting roller, why then of course you haven't got it—you are not producing a replica of this master.

The Master: Theoretically, you could have, then, with your Walcott machine, an absolutely uniform angle then between the cutting edge of the tool and the work all the way around the cam.

A. Everything would be theoretical to meet those theoretical conditions.

Q. (By Mr. Farley): If those theoretical conditions are met then, Mr. Gordon, the reactive force between the work piece and tool in the Walcott machine is always along a line which is tangent to the work piece at the point of contact? A. Yes, sir.

Q. That is not true in the Gordon machine? **(146)** A. Well, no, it is not in actual practice, because it was not necessary, because the change of the angle of the tool in the Gordon machine does not affect the shape of the work, whereas in the Walcott machine any change in the angle of the tool as it was originally set, does change the shape of the work produced, which is a very, very vital point in that.

Q. Now, then, to the extent of that difference, that particular difference we were just talking about, results from the features of construction of the Walcott machine which I just read to you when I was reading from claim 13 of the Walcott patent, isn't that true? That is, the sweep of the tool, as this says, so that the point of engagement of the cutting edge of the tool with the work corresponds to

the point of contact of the abutment roller and master cam? A. What was the question in relation to that?

Q. That is the feature of construction which insures that in the Walcott machine the point of engagement of the cutting edge of the tool with the work, that is, the tool sweeping up the side of the work, as you described to his Honor, and as shown in these views, Figs. 7 to 11, of sheet 4 of the Walcott patent, that that is the feature of the machine which insures this tangency of operation we were just talking about, provided the master cams are properly designed, no error in them? A. That is correct.

Mr. Farley: How late does everybody wish to work?

Mr. Spohn: Isn't this a pretty good place to stop?

Mr. Farley: I was going to start on another subject.

Mr. Spohn: Are you through with this subject?

(147) Mr. Farley: Practically. I think we can stop here, if your Honor please.

The Master: As far as I am concerned, if you want to go on, it is perfectly all right. It is up to the parties.

Mr. Farley: Perhaps you have some questions at this time yourself.

The Master: I was trying to get some of these mechanical parts in mind.

A. In the first place, your Honor, the diameter of this roll changes, coming in on a path, going through this carriage, the carriage being movable in and out at right angles to the axis of the work. This is stationary in relation to the work. That is, these rotate, they are on center, but the distance between the two is constant.

* * * * *

(148) Cross Examination (Continued) by Mr. Farley.

Q. When we closed last night, Mr. Gordon, just before the adjournment, you had been speaking of the mechanism in the Melling machine for taking two cuts. As I recall your testimony, I think, I don't know whether it was in the accounting proceedings or before Judge Tuttle, you said at the time Melling was smarter than you in having his ma-

chine so that it could take two cuts. To that extent the Melling machine was an improvement over your machine, wasn't it? A. Yes, sir.

Q. And that in fact is what you did at Nash when you used two machines, one to take a rough cut and the other a finishing cut, or was it at Nash that you used your machine and then the grinding machines for a finishing cut? A. At Nash the grinder was used for a second, what they call a rough grinding operation.

Q. They did the same thing at Studebaker, didn't they, used two Gordon machines, one for a rough cut and the other for a finishing cut? A. Not to my knowledge. They had two machines at the Studebaker, **(149)** at the South Bend plant.

Q. As a matter of fact, they had four machines there, didn't they, four Gordon machines? A. I don't recall just how many they had. I didn't have much to do with the cam machines there. I was more interested in the crank cheeking machines.

Q. Would it be possible to revise or modify your machine so that it could take two cuts? A. Well, I never made a layout of it, but I think that it could.

Q. As a matter of ordinary machine design? A. I think so. As I remember, it comes to me now, we did make a layout of a means of doing that, of accomplishing that. We never built it. I don't know that we ever made completed drawings of it, but I remember what the method was.

Q. Do you remember the discussion we had last night in connection with this Exhibit 208—the reaction that would occur with the cam swinging down on the tool as I have shown in that Fig. 4 and the reaction being along the arc. Would you know how to prevent that from happening in your machine? A. I don't think that I admitted it would have that reaction. As I remember, my testimony was that it was a combination of two directions of force that did the cutting at that point, one in the direction of the rotation of the work and the other of the drawing of the tool towards the point.

Q. Well, the greater force that would be exerted here would be the force exerted by the rotation of the work shaft downwardly on the point of the tool, that would be a greater force than the movement of the tool in the horizontal path backwardly under the influence **(150)** of the

cam 43, wouldn't it? A. No, I hardly think it would at that point. You couldn't have one without the other, I don't believe.

Q. In the Melling machine, however, the action of the tool and the work cutting up along the side of the cam was such that the movement of the tool had a very much greater effect in producing the cutting action than in the Gordon machine, isn't that true? A. Only in a sense. They both have to cut, cover the same surface about the nose, and in each case that cut is controlled by the movement of the point of the tool.

The Master: Will you read that question?

(Question read by the reporter.)

Q. When you were explaining to the Master yesterday afternoon you said that in the Melling machine the tools swept up the side very rapidly and that did not occur in your machine, that is true, isn't it? A. Yes, sir, that is true.

Q. And the rapid upward sweeping of the tool in the Melling machine was along the line, a tangent line such as I sketch in Fig. 5 and mark with the letter S, and in that case the relative movement between the point of the tool and the work was produced largely by the upward swinging of the tool, isn't that correct? A. I think that you are correct in that, but in that connection I would like to say that the point of the tool covered the same distance in making that cut on one machine as it did on the other, but in the Melling machine the time required to make, the time required to travel from the base of the nose to the point of the nose was much less in one case, that is, in the (151) case of the Melling than it was in the Gordon.

Q. Yes. When you say the point of the tool covered the same distance, what you really mean there is that the point of the tool in both machines swept around, or cut the same part of the cam, that is really what you mean, isn't it? A. Covers the identical length of cut or movement of the tool point.

Q. Yes. A. What the tool point in one case covers it also covers in the other case. They are both producing the same form.

Q. Yes. A. But the speed at which they cut, that varies on the two machines at different points.

Q. They both cover the same surface or contour of the cam? A. That is correct.

The Master: Was the speed of the cut of the tool in your machine around the cam approximately uniform, or did it vary considerable as it went around?

A. The cut around the point of the cam?

The Master: The speed of the cut around the cam, as it was cutting the cam, was that approximately uniform all the way around with your machine?

A. It was uniform except to the extent that the cut is more rapid as you reach a greater diameter.

That is, if this were a 100 per cent diameter base line and you are moving out to a 2-inch diameter base line with the same number of revolutions per minute, why you are going to pass, the tool is going to pass through the material at a greater speed when it gets further away from the axis of rotation.

* * * * * *

(152) Q. (By Mr. Farley): I think I see what you have in mind. In the case of your machine the cutting action—we went over this before, but let us assume that the eccentricity of the nose is 3/8 of an inch. Suppose you have a base circle 3/8 of an inch. In that case, in the case of the Gordon machine, your tool is moving along the horizontal line between cam 43 and swinging on this shaft 24. The tool is moved 3/8 of an inch during the time the cam is rotating from this point, the point at the end of the base circle, to the exact nose of the cam, that is true, isn't it? That is the distance you must swing your tool backwardly to bring the point of the tool out the required distance from the center? A. Yes, sir.

Q. And during that time, however, the work is rotating quite rapidly? A. Constant speed.

Q. As your tool moves out beyond the base circle the cutting speed at each instance increases progressively from the base circle out to the nose of the cam? A. The cutting speed increases.

Q. That is right. A. That is correct.

Q. And the maximum cutting speed is exactly at the nose of the cam? A. Yes, sir; the greatest distance from the center of rotation.

Mr. Farley: Is that what you had in mind?

The Master: Yes. With the Melling machine, on the other hand, you had a much greater speed.

A. Accelerated speed.

The Master: At a certain point.

A. Yes, very materially accelerated speed, but the diameter on **(153)** which you are cutting in the Gordon machine is what controls the speed of the cutting, which is not true in the Melling.

Q. (By Mr. Farley): I think you already pointed out to the Master that the nose of the cam is the hardest point to cut; that in the Melling machine the tool moves upwardly somewhat rapidly until it reaches the nose and then during the cutting of the nose the relative movement between the nose and the point of the tool is comparatively slow? A. I didn't make any such statement as that to the Master or to anyone else at any time, because it is not true.

Mr. Farley: Will you read my question, please?

(Question read by the reporter.)

A. That first part of it is the part I object to.

The Master: Will you explain what you were going to say there? I would like to know what he was about to explain on that statement.

A. If this were a cylinder, and this diameter, the diameter at the end of the nose, it wouldn't make any difference there about the cutting speed. Now, that is the condition that obtains in the Gordon machine.

Now, the reason why they are so long in cutting about the nose of the cam in the Melling machine is because they whip the tool up to the point and then just follow it down around here and during that much of the rotation of the work they do very, very little work.

The total time consumed in turning all the way around there is divided up into, we might say, three periods. When you are working around the base that doesn't change. It is constant all the way around.

(154) When you start to go up here in the Melling machine it whips up there very rapidly and then as it reaches the point of the nose it slows down, while that

travels 'way around, approximately to that point, and all it is doing during that time is cutting from there to there, but that doesn't mean they are doing that, because it is a difficult thing to do. They are doing it because they can't avoid doing it. There is no way in which they can speed this up here and carry a similar speed around the nose, because if they did they would be shortening the total time and they can't do that. If there are 60 revolutions a minute it takes one second to go all the way around. They have got to use that entire time somewhere. It certainly changes the speed going around there. They are longer at one point and shorter at the other. It is not because one part is more difficult to cut than the other. We do not at any time in the Gordon machine, we do not at any time exceed the speed of cutting equal to the rotation of the work, whereas in the Melling machine they exceed that in two cases, and that degree is very, very material in one case.

The Master: Is the cutting tool worn out much faster by rapid acceleration at one point and decreased acceleration at the other?

A. The life of the cutting tool is dependent upon the speed of the cut.

Q. Let me ask you this: Do you know in either the Gordon tool, or Gordon machine, rather, or the Walcott machine, was it possible to rotate the work so that the linear cutting speed would be the maximum cutting speed for normal upkeep of the **(155)** tools, isn't that true? A. To a large extent it is true. However—

Q. All right. A. May I finish?

Q. Yes, that is all right. Excuse me. A. However, if you run that tool, we will say a tool that is quite capable under ordinary conditions of carrying a cutting speed of 150 feet a minute, which is not unusual at all, if you reduce that to 50 feet or one-third of that speed, your tool would wear out, but it wouldn't wear out as quickly. That is all the difference. There is a wearing out and that wearing out is very material even on slow cutting.

Q. One of the reasons why it is not possible to run either of those machines up to maximum cutting speed is

because of the difficulty in having the tilting tool mechanism following the tilting tool cam? A. Yes, sir.

Q. Now, on this proposition which you so violently disagreed with me, that the nose of the cam is the most difficult point to cut, suppose we increase the area under consideration being cut, not restricting it to the exact nose or sharp point of the cam, but including, let us say, oh, an area we will say ⅜ of an inch along the side edge of the cams in each direction from the nose. If we make that as the portion as being the most difficult to cut, would you agree with it? A. No. If I understand the question right it wouldn't make any difference under normal cutting conditions where you cut, as long as you maintain the proper tool angle and tool clearance.

Q. Then your answer assumes that in the cutting of that particular portion of the contour of the cam to which I referred that you **(156)** are going to have the ideal conditions existing, is that true, tool maintained normal at proper cutting angle and clearance? A. You are speaking now of the Gordon machine?

Q. Yes, let us limit it to that. A. We are assuming that the tool is going to be in the proper cutting position at all times.

Q. And if you can't hold the tool in the proper cutting condition during the cutting action at that portion of the contour, you will run into difficulties, or you are likely to run into difficulties, that is correct, isn't it? A. That depends entirely to the extent that you depart from what you might call an ideal cutting angle.

Q. Do you have any opinion as to how far that departure from the ideal may be before you would run into difficulties? Would you hazard an opinion on that? A. Well, I would like to express an opinion on that if I could make up my mind that my answer would be understood, because I think that we are looking at it in two different manners.

In the cutting tool of the Gordon machine the angle of the cutting edge of the tool does not vary at any time at any point while it is going around the cam with reference to the metal that is being removed, that is, the surplus metal.

The thing that does change is the angle or the tangent at the point of cutting to the point of the tool, which is not doing the cutting. I say that while—

The Master: For that first angle you speak of what line do you use as the other line or angle? You say that you have a constant angle.

A. Could I make a mark on this?

(157) The Master: Here, take another sheet of paper.

A. Looking at the tool we will say here is the cam. Now, this we will call that the center line of the work. Now, the tool is in here and that tool is positioned something like that.

Now, looking at it from the—that is, looking down on the top of the tool, and the cut is removing this metal back there, see?

Now, it is the relation of the tool to this that makes the cut.

Now, looking at it from the other side we have the tool here. It is this angle here in relation to the face of the material that is being removed that is constant at all times. There is not any movement that is going to change that angle.

That is, that cut is going to be the same right from the beginning and all the way around to the material that it is removing.

Now, the angle at all times, the metal that it is taking —in the Gordon machine we have a circular tool like that. Now, this angle here in relation to the surface of the finished material, that does change and can change and make no change whatever in this cutting angle, excepting as it might cut, the cut might be in that direction or it might be in this direction, or it might be in this direction. That is the face of the cutting edge of the tool in relation to the finished work.

The Master: This first angle you are speaking of, is that the angle formed by the side of the tool and work that is being removed?

A. I was going to bring you a piece of a shaft showing the cut. I **(158)** haven't got that here. I guess that

is over at the hotel. This angle here is the angle that might be pictured with that knife blade. No matter where that goes around the edge—

Q. Maybe this will help. A. You see, this angle here changes, the clearance angle from the cutting edge below it, that must have a clearance so that it does not interfere with the work.

Q. That is the side cutting edge of the tool you have been referring to on physical Exhibit 58-A that was introduced at the hearing before Judge Tuttle, and that is a tool-holder from a Gordon machine, is that correct? A. Yes, sir. I don't think that is a tool-holder from a machine that was made for Ford as my memory serves me.

Q. I think you are right. A. I don't remember it in connection with that, anyway. But this angle here, we will take that that way. That angle there might change. See, that would be this line here.

Q. Might I suggest something? You say this angle here. Would you please say, I am referring to the front angle, if that is what you mean, front angle of the tool and not the side edge. A. I am referring to the line designated as A on this sketch.

Q. Now, will you mark that sketch Fig. 1. Suppose you mark the other one Fig. 1 and make this one over here to the right Fig. 1 and that one Fig. 2. A. All right. I am holding the cutting tool in this Exhibit 58-A parallel to the line designated as Exhibit—designated as A in Fig. 2, and you will see that that angle is different from either a normal to the tangent, which would be there.

(159) Q. Suppose you draw a line at the point where you said "there," mark it "N" for "normal." Would you mind stating now that you have drawn a line there? A. I have drawn a line which would be practically—

Q. Normal? A. At right angles or normal to a tangent at the point of contact with the finished surface of the work.

Q. And you have marked that line N? A. And I have marked that line N.

Q. Thank you. A. Now, I am holding the tool now parallel with the line B, Fig. 2, and it shows an angle to the normal or to the tangent, which we would call a negative angle.

The Master: That is, angle to the tangent than to the normal, you mean? You said an angle to the normal or to the tangent.

A. Yes, this would be the normal and at a tangent it would depart from a right angle.

Q. Which one of the lines there are you referring to as being the negative angle? A. That one marked B.

The Master: The angle formed by B and a tangent to the finished part of the work.

A. Yes. And when it conforms or is parallel to the line marked A it would be what we would call a positive angle. Now, in neither case does that change the cutting angle of the tool with reference to the material being removed.

The Master: You mean the angle formed by the side of the tool is constant all the way around?

A. And the top of the tool, that is, this being the top of the **(160)** tool, and this being the side of the tool.

Q. (By Mr. Farley): I am wondering whether you haven't inadvertently, Mr. Gordon, referred to the line—oh, I see, you have got your work rotating in this direction. A. Clockwise.

Q. Isn't that going to be confusing, showing your tool over here on this side? A. I am afraid it would. Yes, this tool, the work should be rotated in that direction.

Q. Then if the work is rotating in that direction, then your line represented by the line B would be a positive angle and not a negative angle, isn't that true? If your work is rotating in this direction, hadn't you better put the arrow the other way around?

The Master: Rotating counter-clockwise, you mean?

Q. Yes. Now, with the work rotating in the counter-clockwise direction as you show by the arrow, the line B, then it would be— A. (Interposing): Would be a positive angle.

Q. Rather than a negative? A. And the line A would be the negative angle.

The Master: You better have this marked as an exhibit so that the record will be clear on that point.

Mr. Farley: Let us make it Exhibit 210, I think.

(The paper above-referred to was marked Exhibit 210.)

The Master: I will admit Exhibit 210 into evidence.

Q. (By Mr. Farley): Well, now, Mr. Gordon, I gather from your explanation that you want to have the Court understand that it is the side portion of the tool and side cutting angle which **(161)** is of the greater importance in so far as the Gordon invention is concerned, is that correct? A. That is correct.

Q. Are you taking into consideration when you state that the fact that your patent states that the main object of the invention is to maintain the cutting tool in the proper cutting and clearance angles to the work by varying the angle of the tool relative to its support and the work while the cutting is being done? There is not, and never was anything in the Gordon patent or in the Melling machines to vary that side cutting angle that you are now talking about, isn't that true? A. Not during the operation of the machine, that is correct.

Q. And as a matter of fact, the gist of the whole Gordon invention is that of varying the other cutting angle, the angle of the top of the tool, the top cutting edge of a side here relative to the point of contact of the point of that side cutting edge with the work; that is the principal object? A. And to maintain a proper clearance angle.

Q. Yes. A. If that were not done, if the tool were not rocked, why it would not be a very practical tool.

Q. But it all has reference to not the side cutting edge, the entire Gordon invention has reference not to the side cutting edge, but to that front part of the tool and the variation of the top of the side cutting edge from any angle except the normal angle to the work at the point where the point of the tool is cutting, isn't that correct? A. That is very largely true, yes.

Q. Now, let us consider again this area of the cam, as I stated, **(162)** let us say about ⅜ of an inch from the nose of the cam down along each side and including the nose.

Mr. Herklotz testified that in the attempt of the Ford Company to use the Gordon machine the tool made a hollow or a gouge in one side of the work and a hump on the other side, the gouge being there, and I will take the liberty of sketching on this Fig. 2 of Exhibit 210 a small dotted line on the left side of the cam and a similar dotted line on the right side of the cam. I will mark the first one "H" to indicate hollow, and I will mark—wait a minute. Strike that. I will mark the one on the left side "G" to indicate a gouge or hollow, and I will mark the one on the right side of the cam "H" to indicate a hump.

Now, you also admitted that you did have that experience at the Ford plant of some of the cams having a hollow and some having a hump on the other side.

Now, it is true, isn't it, that you did have that experience with your machine, of the formation of a hollow on the approaching side and a hump on the far side? A. It had an appearance of it.

Q. Well now, can't you answer that question "yes" or "no"? A. No, I can't, because it is necessary to explain.

Q. Answer it first and then you can explain. Say whether you had that experience. A. Yes, sir; we did have, and an explanation of what that was, the contour of the cam, gouge there of the finished cam, that is, the ground cam, or if there was no action that made the work depart from the position that it was supposed to be held by the steady rest, that shaft might have jumped into the (163) tool and made a hollow or there happened to be a hollow there on the other side. It might have been free to go away from the tool and put, make a hump, but in the construction of the Gordon machine there was not anything that would permit a hump, because there is no spring action or anything else. It is a positive cam action on the trailing side of the cam.

Now, on the leading side of the cam the tool is controlled by a spring holding the swinging arm up against the master cam, and if the spring didn't hold it up there, then the tool would cut below the surface that it was intended to cut on, but what I have maintained right along is that it was the gouge and the hump were due to the movement of the work in the steady rest, the freedom there in

the steady rest, or to the spring that was due to a heavy cut at the point of flash on the cams that affected the otner shapes, that is, it moved the shaft and of course the ones adjacent or nearer the cam where the excessive metal was on would show the result of a shaft movement that was outside of the orbit in which it was supposed to travel.

Q. Let me ask you this, Mr. Gordon. Assume that no one prior to yesterday ever called to your attention that as your tool in the Gordon machine is approaching the spot marked "G," or let me put it this way, as the tool is at the point where I have marked "P" there in my Fig. 4 of Exhibit 208, no one had ever called to your attention before the fact that your work was sweeping rapidly down on the tool at that point, and that your principal component of force there, giving the reaction between the tool and the work, was on the curved line which I have marked A, was that ever called to your attention before? **(164)** A. Surely. That is in the general principle of operation. You have got two forces and the component of those two forces—

Q. Well, would you say that the fact that your principal reaction between the tool and the work along this line which I have marked A would have no contributing cause at all to the formation of a gouge as I have checked in Fig. 2 of Exhibit 210? A. Yes, sir; I would state that it had no effect on that.

Q. I thought you stated on several occasions that you didn't consider the principal reaction to be along A there? A. I don't consider it, but you are asking a question, does that line that you have drawn, marked A there, it certainly doesn't. That is not the condition. I think I understand what you are getting to and I was trying to give you an answer as I understood what you wanted.

The piece of work is rotating anti-clockwise in this sketch, Exhibit 208, Fig. 4. It is against the tool. There isn't any reason why this is going to go ahead of the power that drives it.

Q. That is just it, Mr. Gordon. The entire cutting force there or certainly the predominant cutting force comes from the rotation of the work in your machine as shown in this view, isn't that true? A. No.

Q. Suppose you didn't rotate the work, could you do the cutting? A. Absolutely.

Q. You could? A. If you didn't rotate—you wouldn't get that form if you didn't do that, but if you pull the tool in that direction, which is one of the directions of the cutting, you certainly **(165)** would cut.

Q. Where are you going to start your tool to do that cutting? A. I am not saying you are going to get this force. It is the component of those two forces. One force is to pull the tool out and it has got the other when you pull that tool away from the axis of the work, and it has got that cut from the other force which tends to rotate the work.

The Master: Could you determine mathematically which of those forces was the principal force?

A. It might be done.

Mr. Farley: We have here, if your Honor please, a plate model of the Gordon machine.

* * * * *

A. Now, while you are turning that, your Honor, you can see what I am trying to explain. At this point here there is no **(166)** movement towards or away from the center of rotation, when it is going around the base line of the cam, but when it goes around here as soon as it strikes the base of the nose it starts to pull that way. This member here starts to swing in under the control of a spring or rubber. Here is the spring here that holds that up against the cam, and that is this cam here.

Q. That is marked the spring 49? A. The spring is 49.

Q. Spring 49 of the patent.

Mr. Spohn: The cam, he is talking about.

Mr. Farley: 43 is the one behind.

The Master: Do these numbers correspond to the numbers in the patent?

Mr. Farley: Yes, sir.

A. Now, when this member here swings away from the axis of rotation it certainly has a cutting effect. If you were to stop the rotation of this member 18, the work member, stop the rotation of that right there, but continue the rotation of the cams, and this would follow the cam—

Q. You would pull the tool out away from the work? A. You would pull the tool along the face of the metal to be

removed and you would depart, of course, from the desired shape of the work, but you would still be cutting.

Q. Just let me ask you before you get off that, Mr. Gordon. As I understand you, you are going to hold this work stationary at this point. You said if you stopped the rotation of the work at this point, that was your testimony, wasn't it, **(167)** you are going to stop the rotation of the work, but you are going to continue the action of the cam to pull this tool to the left? A. To make it more plain—I didn't have it in that position. Let me put it in the position where I had it when I was trying to show you.

Q. It is much clearer if you put it there.

The Master: By "there," you mean it is where?

A. On the leading side, about mid-way between the base circle and the nose of the cam.

Q. All right. A. It is very much easier to recognize what I was getting at.

Q. At that point you are going to stop the rotation of the cam, that is the idea, isn't it? I want to be sure we understand one another. You are going to stop your rotation of your work. A. I said if you stop the rotation of the work and continued the movement of this member 23 in swinging away you would carry that cut from the point where this stopped right out to the outside of the rough forging, and it would be cutting all the way.

Q. You are coming to the point where the cam, the back cam 43 is going to move the part 23, as viewed from the front, towards the left, and that if your work does no more rotation that is going to take your point of the tool straight over towards the left in a substantially horizontal line, and make it depart immediately from the point where it was cutting before, isn't that true? A. No, sir.

The Master: Isn't the motion of that big member horizontal?

A. This member?

(168) The Master: Yes.

A. Member 23?

The Master: Yes.

A. Your Honor, let me show with this illustration here on Exhibit 210, Fig. 2. Now, there is the axis of the

work, and here is the line. Do you want to give this any particular number, Mr. Farley? I am showing a radial line from the center of the rotation of the work.

Q. Let us mark it "R." A. If that tool were pulled out—it was at this point.

Q. "This" point, mark that "P," then. A. On "R."

Q. Before we go any further with that, Mr. Gordon, because this is going to make the record very confused, let me go into this matter. In your Fig. 2 you have shown a tool which I have marked "T" over here, that is correct, isn't it? A. Yes.

Q. And in accordance with your machine, and you have drawn that point of that tool substantially on a line which passes through the center of rotation of the work piece. Now, in your machine any movement of that tool under the influence of this cam 43, and the movement you have just been talking about, and the movement you are laying so much stress upon as having a cutting action additional to the rotation of the work, is going to be a movement in a horizontal line drawn through the point of the tool backward and forward substantially parallel to the top of the paper and not a movement along this line which you have drawn "R," isn't that true? **(169)** A. No, sir.

Q. Can you explain to me how in the Gordon machine, with this mechanism mounted as it is, with your tool mounted to swing on the axis of the shaft 24 it would be in any way possible to get a movement of the point of that tool up on that line marked "R." Let me show you here. There is the movement of that point of the tool, is in and out on that line, substantially horizontal there, isn't it; isn't that correct? A. Yes, practically, traveling in a horizontal direction, but you haven't pictured anything like what I am talking about.

Q. You are talking about the fact that that doesn't apply at all to the machine? A. That is what you think, but I think I will be able to show it does apply.

Q. All right, go ahead. You are going to make the machine do some tricks I never thought it capable of. A. It is not timed right. This line here and this one here are supposed—

The Master: Mark the gears.

A. Now, the metal to be removed from the work piece, No. 18, I will exaggerate and say that it sticks out there a quarter of an inch, just so as to make the picture plain. That is, it would come around about like that, follow that line that I marked 34.

With that movement in that direction, away from the axis of rotation of the work, that tool is set at an angle, and it is going to drag through there from that point to that point, isn't it, on a line horizontal, and that is the cutting **(170)** that I am talking about.

It is going to cut, but it is not going to continue following the contour that we are desiring to make on the work, but it is going to cut until it has passed outside the range of material that is there to be cut.

The Master: It will cut off sort of a small diamond-shaped piece there?

A. Correct. That is all I am trying to explain. Now, that is the power required to do that, together with the power to rotate the work. The component of those two are the direction of power applied.

Now, while this is rotating we still have to the full extent the power required to pull that tool out towards the end of the work.

Q. Now, what power is there in the Gordon machine that would permit the machine to accomplish that cutting you are now talking about? The only power there is is the action of the small spring 49. A. What do you mean by small spring?

Q. The springs such as shown in your patent. I don't mean to say this spring corresponds to the other. A. That spring is developed to where we felt that it was sufficient to do the work, and it did do the work. It took care of millions of shafts.

Q. If you eliminate the rotation of the work, Mr. Gordon, you wouldn't get very much effect of cutting? A. You certainly would. You would finish, you would finish the cut that the tool was in. We will say the tool is in this **(171)** material here to the extent we will say of five-thousandths of an inch. That is the thickness of cut that it is taking. You are making a chip and that chip is five-thousandths of an inch thick. That is what it would do without the rotation of the work and the swinging movement of member 23.

Now, if you stop the rotation you are not going to make the cut any thinner, the chip any thinner. You are going to continue the same thickness until it departs from the work altogether.

Q. Let us be sensible about this thing, Mr. Gordon. A. You are speaking about me?

Q. Yes, sir. A. All right, you go to it.

The Master: This is sort of off the point. How many revolutions of the cam is ordinarily made in completely turning the cam?

A. That varies, of course, with the diameter of the work and the hardness of the steel.

The Master: I was trying to get a general idea.

A. Anywhere from 200 to 250 revolutions per minute. It might be less than that; very seldom any more than that.

The Master: Go ahead.

Q. (By Mr. Farley): You will admit, won't you, that the principal characteristic of a lathe, and before that, the Gordon machine is a lathe, isn't it? A. Yes, sir; we consider it a lathe.

Q. And it works on the lathe principle? A. Yes, sir; but that it departs from the usual lathe practice in that swinging of the tool to and from the axis of the (172) rotating work.

Q. The swinging of the tool to and from the work doesn't in any way change the character of the machine as being a lathe? A. I wouldn't say so, no.

Q. Your principal characteristic of a lathe is that the cutting action is performed by the rotation of the work against the tool? A. Ordinarily that is correct.

Q. And isn't that also correct in the Gordon machine? A. It is true, except when you are cutting around the nose of the cam. I have been trying to explain that there is a different movement there.

Q. Oh, yes, we will admit that there is. A. What that ratio is between the two powers applied is something else. I don't know what that is.

Q. I think you put your finger on the nub of the entire situation and talk we have been having. The ratio between the power to rotate the work, and cause that great force

that is required to tear loose the excess material to be removed, that unquestionably a greater part of that force comes almost entirely from the rotation of the work and not by the action of the spring. Now, it is true, I will admit there is a slight component due to the back and forward motion of the tool along the horizontal line between cam 43, but I think you will admit that if you eliminate the rotation of the work you wouldn't have very effective cutting. Aren't you willing to agree to that? A. No, sir.

(173) Q. Very well. Eliminate the rotation of the work instead of the movement of the tool. You will still say if you eliminate the rotation of the work in the Gordon machine you would still have an effective cutting machine to do the job that is supposed to be done? A. If that were true I wouldn't have had to build a machine that rotated the work.

Q. That is right. A. But the same cut that is being taken during the rotation of the work, the same amount of work or power necessary to make that cut has got to be continued until that tool has finished the cut, diminishing, of course, as it gets nearer the outside diameter of the work, but it took certain power to bring the cut around to that point, around to this point here. Now then, it goes from that point there, it goes out in that direction. When it starts with the rotation it starts where the other cut leaves off and then it has just as much power to continue that, excepting that it diminishes until it gets out to nothing.

Q. Now, Mr. Gordon, did you know anything about the machine, the Gordon machine that was sold to the Jackson Shaper Company, or the Jackson Motor Shaft Company, or some such name as that. You had a machine up there at Jackson, didn't you? A. I think we had two machines, if I remember right.

Q. Didn't they have the same difficulty with respect to hollows and humps on the cams as the Ford Company experienced? A. On certain cams.

Q. Yes. And didn't you have the same sort of difficulty with **(174)** your machine at International Harvester? A. I never saw the machine at International Harvester and couldn't get information from the International Harvester Company people. I probably could have.

Q. You were not sufficiently interested in the International Harvester machine to check on it? A. Well, I was pretty busy. I was making a living outside of that at the same time, but I would like to state that we had the same flash trouble at this Jackson,—I think Jackson Motor Shaft Company plant, along with numerous other difficulties, which we protested against very much, and that was that they put our machine to work right in the middle of all of their rough grinders and emery wheels, and stuff got on our machine from the rough grinders. We told them that we couldn't continue unless they gave us the machine in a proper location, in a location that was clean.

Q. The experience then of the Ford Company was not unique in that respect; other companies had the same difficulty of humps and hollows. Let me ask you if you know how to modify or revise your machine to correct that trouble. Did you ever find that out? A. We did not only modify the machine, but we put the work in such condition so that it would fit a steady rest and couldn't float around like it did at the Ford plant.

Q. Then would it be your position that either could be done, you could either change the machine or modify the work to overcome the difficulties? A. Surely. It has been done.

The Master: Is it your opinion that with the Melling **(175)** machine the only way they got away from that difficulty was by making a duplicate cut?

A. Absolutely. They removed all those variations, all variations in the amount of material to be removed to a very slight degree by that first cut, so that on the second cut they had a very light cut and the metal was practically uniform all the way around, and there was no great amount of movement of the work.

The Master: While you were observing the Melling machine at the Ford plant did you see them attempt at any time to remove all of the metal with one cut?

A. No, sir. I don't think they did. I never heard of a Melling machine that made any attempt to do that. One of the features of the machine was that they would give it two cuts.

The Master: In the Melling machine did they cut it all the way around to the size to eliminate the major part of the metal, the flash and so forth, and then start over again and cut it at the smaller size, or did they make one revolution?

A. Your Honor, they passed entirely across the cam with the cutting tool, and they left it over-size. In other words, if this were the finished size of the cam, they cut it down the first time to about there all the way around, and then the work passed back to where the tool was in the starting position again with reference to the cam, and then the work was moved in so that the tool on the second cut cut it down to this line which I have shown on Fig. 1.

The Master: Pardon me for interrupting, Mr. Farley.

(176) Mr. Farley: That is all right.

Q. (By Mr. Farley): Mr. Gordon, assuming that my theory with respect to Fig. 4 of Exhibit 208, of there being a large component of the reaction to cause the cutting, being due to the rotation of the work against the tool, and that that reaction is directed along the line, or rather that the work is moving along the arc A, and that the reaction is along the dotted line which I have marked D, would that sort of a condition be more acute with a sharp-nosed cam, such as the Fordson F-446 cam, which you attempted to cut on the Gordon lathe; would it be greater with a cam of that kind than it would be with a cam of the type that was used by the Nash Company as shown in this Exhibit 205?

And I will let you look at the drawing of the Fordson F-446 cam, which is attached as Exhibit 3 to the Defendant's statement of account. Perhaps it would be simpler instead of using this to refer to your ten times enlargement of the Ford cam, because that compares very favorably with the size of the Nash drawing. A. Now, if I understand your question I can explain it this way: If this Nash cam, Exhibit 205, at any point around the base circle of that cam the direction of force is constant, and as soon as you start to depart from that cylindrical shape then you have got to have some other element that is going to require power to pull the tool in another direction.

Now, on the Ford cam—do you want to use any exhibit number?

Q. That is your Exhibit NN, I think. NN. **(177)** A. On this enlarged drawing of the Ford cam, Exhibit NN, is a sharper nosed cam than on the Nash. Therefore you are going to require more power to do your cutting as the tool is dragged out towards the nose of the cam, and if you were to have one twice as high as that mounted on the same diameter base circle, you would require still more power, and the nearer you get to a cylinder the less power is required, in fact, until on a direct cylinder there is no power required, except the power required to rotate the work. As soon as you start adding the nose or the tool, it must be carried in any direction away from the center of rotation, then you need power to pull that tool there.

Now the component of the rotating power and the power required to move the tool out towards the nose of the cam, that is the power required to move the work.

Q. That isn't really an answer to my question, Mr. Gordon. As I understand it, that explanation you just gave there involves the distance you have to move your tool outwardly due to the lift of the cam. That is the follow-out, as I understand your testimony, the follow-out from the base circle due to the lift of the cam here, and you have to pull your tool, and more power is going to be required to pull it out, is that the gist of what you were saying? A. Yes, sir.

Q. Well now, what would you say, that that would be greater on the Ford cam than it would on the Nash? A. I think it would.

Q. I am calling to your attention the fact of the drawing of the **(178)** Nash cam shows the distance from the center to the top of the cam as 1.0445 inches, whereas in the Fordson cam the distance from the center of the cam to the point is given as .964. So in that respect the Fordson cam would take less power to move it out? A. No. No, you haven't told the story.

Q. Well, probably I didn't understand your testimony correctly then. A. I said relative to the base circle, the amount of lift from the base circle.

Q. Oh, I see. A. That is the principal thing. Now, we have other things there in connection with that, which

as I referred to, the angle of that nose, and that is quite material.

Q. Yes. The Nash cam has a larger base circle by two one-hundredths of an inch than the Ford cam, fifteen one-hundredths of an inch, approximately, and there is a difference of probably fifteen one-hundredths of an inch between the amount of lift between the cams, and so they practically balance I would say, in that respect? A. Excepting for the shape of the nose.

Q. Yes. Well now, the point I am getting at is if you assume your various positions of the tool as shown in your Exhibit NN, a greater degree of movement of the tool in your machine for the Ford cams, a very much faster movement will be required around the nose of the cam than would be required with this long sweeping radius of the Nash cam, that is true, isn't it? A. That is correct, due to the shape, the difference in shape of **(179)** the nose. One has a very blunt nose and a wide angle between the sides, and the other has a comparatively narrow angle between sides, which makes a small nose.

Q. And you encountered greater difficulties in your machine in cutting the sharper nosed cam over the blunt nosed cam? A. No, not due to that.

Q. Due to what then; due to the machine? A. No, due to the fact I have been trying to explain in reference to the flash and irregularities of the amount of material to be removed.

* * * * *

(180) The Master: I would like to ask in connection with that line of questioning that was just completed by Mr. Farley, if you had the same amount of flash with a blunt-nosed cam of **(181)** the Nash type, would you have the same difficulty of gouging one side and a hump on the other?

A. Your Honor, if the cam shaft, that is, the work, was not held securely in the means provided, which we call the steady rest, if that steady rest did not control the position of the work, why any irregularity like that of course would make it move about and it would be reflected on pretty near every cam on the shaft, not only the one that had the flash, but on the other cams also.

The Master: The flash, as I understand it, is usually right at the point.

A. No.

The Master: It is not?

A. No, the flash on pretty near all the cams is near the point, on one or two cams, but it is also directly opposite it.

In other words, as shown here, the flash might be up here on the point or on the extreme nose of the cam, as shown here, Fig. 2, Exhibit 210, but there also is one directly opposite that, because the die is made in two pieces put together, and they throw a flash in both directions. It is the excess metal that is put in between the dies that must work out somewhere, and it squirts out between the two dies, and that forms the flash which usually is trimmed off.

The Master: Can you say from your knowledge of forging whether you are more likely to have a flash with the sharp-nosed cam than with the blunt-nosed cam, or if there is any relationship?

A. No, the amount of flash is dependent upon the condition of the **(182)** dies and the amount of surplus material that is originally put between the dies.

If the dies are worn there is not as much metal squirts out to make a flash. When the dies are new there is more metal squirted out from between the dies, but the dies are in such condition that they cut it down very thin.

Q. Probably it would help you if you would point out to the flash on Defendant's Exhibit 28, which is a forging of the Model A cam shaft. A. All right. Now, this part of two dies is shown quite distinctly at the end of that Exhibit 28, Defendant's Exhibit 28, and that is carried along the full length of the die, clean up to the other end.

Now, at this point the flash is moved over off the straight line because they have changed the surface of the forging die.

In other words, they have dropped down a little bit there and they have had to build the other die up to meet that, but it is pretty near the same all the way along.

Here on the second cam it is almost at right angles to the nose.

The Master: There is no relationship in this between the nose and the flash?

A. No. Over here the flash was directly opposite the nose, so it varies all along the line.

You have got all kinds of conditions there, and it might be that it is desirable in making up forging dies to have the flash slightly to one side.

(183) In this particular case they have overcome a difficulty there by changing the parting line of the dies on this cam, the first cam from the flange end, but the rest of it apparently is all on the one line all the way through, but in this particular one they have moved that over and had to build up the corresponding die to make up that difference.

So you see the flash really hasn't anything to do with the nose of the cam, only that it is convenient to make it near the nose of the cam of a four-cylinder shaft, of two of the cams, but they are the only two there where you have that condition.

In this one here you have it very close to the nose. Is that clear?

The Master: Yes, that explains it.

Q. (By Mr. Farley): Mr. Gordon, I hand you a blue-print of the cam which was introduced in evidence as Exhibit MM during the hearings at Milwaukee, and that is a blue-print of the drawing that you produced up there, is it not? This is a copy that was furnished us.

* * * * *

(184) A. There is no question but what it is a duplicate of the original.

Mr. Farley: Please mark that Exhibit 211.

(Document marked Exhibit No. 211.)

Q. I hand you a celluloid, we will call it celluloid, at any rate, semi-transparent paper, which is marked "Tractor Cam," and has just been marked by the reporter Exhibit 211, and I will ask you to place that upon the drawing Exhibit MM, and state whether or not the Exhibit 211 conforms exactly to the contour shown on your cam drawing Exhibit NN? A. It is very close there in contour to the figure shown on Exhibit MM.

Q. It is not only very close in contour, but it also coincides exactly as to size, does it not? A. Very closely, yes, sir.

Q. You are not able to detect any variances, are you, Mr. Gordon? A. Well, I would expect there would be a variance, because this is a blue-print and usually they shrink or stretch away from the original drawing dimensions. That is why we put dimensions on so that we don't use any dimensions that are taken off the drawings by measurement.

We always conform to the dimensions stated on the drawing.

Q. Well now, if that Exhibit 211 were prepared by the use of the dimensions given on the drawing Exhibit MM, you would agree that that would be a correct representation of the cam you depicted in that exhibit, would you not? A. Yes, sir.

(185) Mr. Farley: Very well. Will you mark this Exhibit 212.

(Paper marked Exhibit No. 212.)

Q. Now, as I understood your testimony at Milwaukee, the cam shown in Exhibit MM was prepared to give the angles of the Gordon tool such as you have shown in the Exhibit NN, which as you stated contains a representation of the Ford Motor Company's cam F-446 enlarged ten times? A. Yes, sir.

Q. Now, will you take the Exhibit 212, on which there is the representation or outline of a cam, and I might state to you that that is a representation of the contour of one of the Ford F-446 cams, with an allowance of twenty-five thousandths to represent the size to which the cam would be turned on a Gordon machine, and that twenty-five thousandths being allowed for finish, and if you will place that on the cross-sectional outline of the cam on Ford drawing F-446, which is attached to Exhibit A and marked Exhibit 3, making the check on the view at the top of the sheet marked Section AA. Will you do that, please, Mr. Gordon? A. It appears to conform.

Q. While you are making that check, Mr. Gordon, I would like you also to check the locations of the centers of the various radii? A. It doesn't appear to be correct

here. I don't know why. Maybe I haven't got it lined up, but I think I have it lined up on the center lines in both directions, but that doesn't seem to check.

(186) Q. It checks in the position in which I now have it. You see this contour drawn on this Exhibit 212 is a little larger than the contour shown. A. If it checks there it doesn't check here on the center line. I brought it to the center line and it didn't check here. You have made it check there, and that pulls it off the center line.

Of course, I don't know just what you are leading to, whether that slight difference makes any material difference.

Q. Perhaps we better check this. I would like to call your Honor's attention that these cams are constructed and formed of a plurality of arcs which are tangent. The first arc is the one which constitutes the base circle, and then up the side of the cam you have an arc struck on the radius which is marked 2.525. Then when you get to the nose of the cam you have still the third arc which is a short, a very small circle, the radius being, as given on the blue-print, .00625, and Mr. Gordon and I were discussing that substantially 1/16 of an inch radius, that is correct, isn't it? A. Yes, sir.

Q. Now, perhaps it might be better if you will make that measurement, Mr. Green, as to the location of that center, and have Mr. Gordon check it.

The Master: Are there only 3 arcs in that particular cam?

Mr. Farley: 3 arcs, yes, sir. That is, 3 arcs in each half of the cam and the arcs on each side are exactly the same.

Mr. Green: The distance down from the center line, **(187)** Mr. Gordon, is given on this drawing as 909. I have a scale here. You can check that.

A. That is to this center?

Mr. Green: Yes.

A. Yes. That is very close to it. You are speaking of thousandths. You have got to guess. I don't know what he is leading up to and whether you demand any greater accuracy than that or not.

Mr. Green: This is 1.632, the other location of the center.

A. You are reading in terms of thousandths.

Mr. Green: No. 1.632.

A. One inch and six hundred thirty-two thousandths. You have got to guess as to just those thousandths. I don't think it makes any difference.

The Master: Why don't you go ahead with your examination and find out whether it does make a difference?

Mr. Farley: All right.

Mr. Green: I would say these were a little out according to the drawing, to the best of my knowledge.

Mr. Farley: All right.

A. That doesn't match up with the drawing, and that is what I meant when I said perhaps the drawing has shrunk from the original and doesn't correspond with the figures. That has been wet and stretched, probably, or shrunk.

Mr. Farley: Referring to the blue-print, the Ford blue-print?

A. Any blue-print.

Mr. Green: In your shop practice you generally work to **(188)** the dimensions as stated on the blue-print.

A. Yes.

* * * * *

Q. (By Mr. Farley): Now, Mr. Gordon, considering your drawing Exhibit NN, you start with two, and I would say three, that is, three locating points, if I may put it that way, that is, starting at the point marked 65 on the left-hand side of your view, you start there with an established angle of the tool to the work of a 15-degree positive angle, that is correct, isn't it? A. That is correct, referring to the cutting edge in its relation to the contour of the work.

Q. Yes. A. Of the finished work.

Q. And now another locating point was the point directly in the middle of the sharp nose of the cam to which you have a vertical center line drawn and to which you have the inscription "Tool normal," that is also true? A. That is correct.

Q. And on the right-hand side of the cam you have a condition just as I described with the point 65 with a 15-degree positive angle, which is shown at the left of the cam? A. Yes, sir.

Q. Now, as I understood your testimony, you selected the 15-degree positive angle to begin with here, at the point on the left **(189)** marked 65, in order to bring the tool to the position, normal position, with the nose of the cam, and so that in the space between the 65 and the tool normal, you would get the various positions that you have indicated on your drawing, that is correct, too, isn't it? A. Yes, sir.

Q. Now, if you have a cam such as Exhibit 211, which corresponds in contour to the cam shown in the drawing Exhibit MM, and if with that cam on the plate model we have here, which is Defendant's Exhibit 57, if the condition of the 15-degree positive angle at the point 65, and the normal angle at the center of the nose of the cam, if those two conditions are fulfilled, together with the condition of the 15-degree positive at the point 65 on the right, then by the use of that cam we should get the same degrees or the same inclination of the tool to the work as you have shown in your drawing Exhibit NN, isn't that correct? A. Yes, provided, of course, that the mechanism that you show here corresponds to the mechanism on the machine. That I don't know. I haven't checked that up. This was only a general picture, as I assumed. I don't know whether the distances on this arc or the distance from the cam to this point, I don't know whether any of those will correspond with the real machine.

This was drawn up to represent what would happen in a machine similar to the machine that was provided to the Ford Motor Company.

I have no means of checking this to know. It is years **(190)** since I had anything to do with that, so I can only say offhand it doesn't look to me you have retained the dimensions on this that there was on the Ford machine, that is Exhibit 57.

Q. Did you ever change materially the dimensions of the frame piece swinging arms 23 during your manufacture of your machines? A. Yes, sir.

Q. What departure did you make when you changed those dimensions? A. As I remember the changes that were made, the material changes that were made was that in the first place we had—is that 34 or 84?

Q. 34. A. 34 represents the tool-holding block, referring to Exhibit 57.

This looks to me as though it were much smaller than the one we furnished the Ford Company, and if it is why then we must have changed the arm here to take care of the larger tool block, and if we took care of the larger block we would necessarily have to change this member here, 52, in relation from the point, fulcrum point, to the gear teeth that meshes with tool-holder block 34, and we also would find it necessary to change the dimension between the fulcrum point and the roller 53.

Q. You are changing the fulcrum point and roller? A. The distance between the two.

Q. Do you have with you the tool block that you produced at Milwaukee, I think it was introduced as Exhibit OO? A. I don't know whether we have it here. We have it somewhere in Detroit. It is in the hotel, I think.

(191) Mr. Spohn: We have that.

Q. We have here a tool block from a Gordon machine. A. I would say that was one of the early machines. It looks like it from size.

Q. Did you make any change in the dimensions of that part? A. Oh, yes. I just explained that as I remember we made an entirely new tool block, much larger in diameter, which necessitated these other changes.

Q. Was your Exhibit OO which you introduced at Milwaukee one of that type, one of the later ones? A. What was Exhibit OO?

Q. I think Exhibit OO was another tool block. A. If that is what we exhibited over there, I am quite sure it was a Ford machine, or used for the Ford machine, or similar to it.

Q. Now, you maintained, however, in all the machines, did you not, the equal distance between the pivot point and the gear sector 54 of the bell crank lever 52, and the dis-

tance to the center of the roller? A. They have been changed, but whether they were ever corresponding in dimension, I couldn't remember that.

Mr. Michael: You mean corresponding to Exhibit 57.

A. No, the distance from the fulcrum point to the pitch line of the teeth in the gear and corresponded in distance to the center line or the fulcrum point and the center of the roller pin 53.

Q. You made some mention during your testimony, as I recall it in Milwaukee, of having some sort of a jig or fixture which **(192)** you used to determine the proper contour of the tilting cam. Am I correct in my recollection on that? A. We did when we were producing those. They did not belong to us. They belonged to the concern that was manufacturing our machines.

Q. You did not use a jig of that type, however, to produce the drawing Exhibit MM, is that correct? A. No, sir.

Q. How did you produce that drawing Exhibit MM, do you know? A. We had to use all of the elements that went into this mechanism there and worked them up, developed them so that we could make a drawing such as Exhibit MM.

Q. It was necessary for you in making that drawing then to consider the distance from the center of the shaft 24 to the point of the tool 37, was it not? A. Surely. That is one of the, only one of the elements. There are many elements that entered into it.

Q. Do you know what dimensions you used for that, for preparing these two drawings? A. I couldn't remember that.

Q. Have you got any way of determining that, finding it out? A. What is that?

Q. Let me put it this way: Will you supply us with the data concerning that? We would like to have you supply us with the dimensions you used in the preparation of these drawings, Exhibits MM and NN, of the distance from the center of the shaft 24 to the point of the tool, when the tool is on the base circle. Will you make that notation? **(193)** A. That wouldn't make any difference where it was. The point of the tool is constant in relation to the center here.

Mr. Michael: What he wants, Mr. Gordon, are your work sheets, your dimensions you used.

A. The center is here.

Mr. Michael: He wants anything that may have entered into the figuring out of the cam.

A. I haven't got it here.

Q. I would like to have that, and I also would like to have the dimensions of the work piece 34. I would like to have the dimensions of the crank arm 52, with the location of the pivot point and the distance of the—the dimensions that would locate the center of the shaft upon which the cam 43, the contour cam and tilting cam, those distances being given from the—I would say from the location of this pivot when the part is on the base circle, and also from the center of rotation of the work. Do you understand? A. I think I understand. I think we can get what we call a manual showing the steps necessary.

Q. These dimensions I have just given you will be the requisite ones, and I would like in addition for you to supply us with all of the material dimensions, outlines, that you used in the preparation of these two drawings, that is, every factor of the dimension which you took into consideration in the preparation of these drawings, do you understand? A. Yes, sir. In other words, you want the data that we used to prepare that?

Q. Yes, and the method and means by which you prepared them. Now, **(194)** assume that we have here a correct representation of the dimensions of the Gordon machine and suppose that we begin with the parts in the position they are now in, in which the cutting edge of the tool is shown on the nose of the cam in a position there similar to that shown by the vertical line on this drawing Exhibit NN, and to which the inscription "Tool Normal" is given. Will you look at the model before you and state whether or not the tool is normal to the work at that point?

Mr. Michael: I think that is a rather violent assumption to base a question on, in view of Mr. Gordon's testimony.

• • • • •

Q. I might state for your convenience the upper of the lines of this outer plate is a line which extends parallel with the cutting edge of the tool. A. And it also passes through the center of the work?

Q. Yes. A. That necessarily makes it normal then to the work, the cutting edge of the tool normal to the work.

Q. Now, Mr. Gordon, I call your attention to this lower line here on the outer plate that passes through the point of the tool where the tool contacts with the work, and it also passes through the center or axis of rotation, and it coincides with the center of the arc where the tool is now about to begin cutting, isn't that true? A. It appears to be that way.

Q. Would you mind taking the protractor and state whether or not that line is 15 degrees?

(195) The Master: One from the other?

A. This is the line?

Q. That is the line. A. It is approximately. It looks a little bit more than 15 degrees from that line to this line, —that is what you are speaking of?

Q. It looks to me like it is right on the 15. A. It is not on the 15, but it is approximately there. This is a pretty crude arrangement to get any very accurate measurements.

Q. With that setting, that corresponds to the position 65 at the left-hand side of your Exhibit NN, with the tool at a 15-degree positive rake? A. I don't just get the lines you have got that would indicate it is on 65 degrees.

Q. Here it is here. 65. A. Approximately. Of course, that is only approximate. That isn't anywheres near accurate.

Q. It is off how much? A. It is off where? At this point?

Q. It is not off more than a portion of a degree, or something like that? A. It might be off a degree or two degrees. It could be brought around, however, to as near as your instrument will show exactly there. That would be mid-way. You can't see unless you are looking directly toward it. That is much closer in. Of course, you have got a line here that is 1/32 of an inch wide, corresponding with a line very much narrower.

(196) Q. Now, the model as now set then complies with the 15-degree positive condition for your point 65, isn't that true? You just measured the angle between the heavier line on this outer blade and the finer one and you found that to be 15 degrees. The heavier line passes through and is parallel with the uppercutting edge of the tool? A. It is approximately that, yes. It is pretty hard to say.

Q. The lower line, however, would indicate the condition as shown here, that your tool instead of being on the normal, the lower line is the line which in that position of the parts is normal? A. I haven't determined in my own mind yet why this line here isn't a horizontal line. It seems to me much lower here than there. It may be I am not looking at right.

Q. That is due to the fact that we are passing around. A. Have you passed off the base circle?

Q. We have got to the point here where we are above the horizontal line. A. You have passed.

Q. Here is the line running across there, here we are right on the base circle. A. I was trying to find out. It seems to me that base circle runs around to here, but that should be a horizontal line. That is the way it looks to me. That 65 degrees there is the point at which the nose of the cam begins to depart from the base circle, and that is considerable. 2½ degrees, and we have got 65 degrees. We are considerable down there.

Q. Let's see if we can get this horizontal. Now, I am holding **(197)** your drawing about in the same position, and this line, which is the upper heavier line, will be represented by this plate line that runs at that angle, and this other line. Neither one of those lines, if you put this to the corresponding position to the parts here, would be horizontal, if they were continued on your drawing, would they? A. This line here is a radial line that passes right through the center. If it is on the cylindrical part of the cam, the base circle, as soon as it departs from the base circle, of course it doesn't run through the rotative center.

Q. That will vary by the tilting of the tool here, will it not? A. Surely, that is what the action of this cam is, to tilt the tool to conforms to certain positions.

Q. As that tool is tilted it will move that line away from the horizontal position as I illustrate there.

The Master: Is the line horizontal all the way around the base circle? Is it supposed to be?

Mr. Green: It stays constant. May I have a question?

Mr. Farley: Yes.

Mr. Green: Isn't it true that the distance from this point of the tool to the pivot point up here isn't necessarily equal to the distance from the center of rotation to the pivot? As I remember the layout of this machine, the distance from the point of the tool to this pivot is slightly less distance from the center of rotation to this pivot. Therefore that would account for your extra, you say, variation.

A. I don't believe it is. I won't say positively, but it was my impression that that was the same distance from the point of the tool to the center of this four-inch shaft No. 24 was **(198)** the same distance as it is from the center of the work to the center of the shaft.

Mr. Green: Assuming that it is, if this is an arc and the arc moves from the vertical, or the radius is turned, assumed to be turned from a vertical position around an arc, wouldn't that raise it slightly from here to here?

A. It wouldn't raise the point. It would raise the entire mechanism if this were a vertical line there and if you departed from that vertical line it would swing upward slightly.

The Master: If you drop a vertical line down here would each of these points be equi-distant from the vertical line of your machine?

A. Which points?

The Master: The two points you are talking about here.

A. This point is a fixed point in relation to this point. That is, the center of member 24 and the point of the tool is a fixed distance between those two members. It is also true in reference to the center of the work and the center of 24. That is a fixed distance which never changes.

The Master: Are those exactly equal?

A. I think they are. Mr. Green said they were different.

Mr. Green: It is my recollection that this model, that there is a slight difference in the distance from the point of the tool.

A. In the model.

Mr. Green: And as I remember the checking it seems to me I remember definitely checking the machine. I wouldn't be **(199)** definitely sure about that.

A. Did you check the center of the bearing that carries the tool block?

Mr. Green: Yes, that distance corresponds with the center of the tool.

A. It is supposed to, but I don't know whether it could.

Mr. Farley: I might say we checked these with parts which we have in the office of a Gordon machine, and they correspond.

Mr. Michael: This lay-out was supposed to represent a Gordon machine. Why don't you defer all of this until you get Mr. Gordon's work sheet?

Mr. Farley: I am quite willing to do that. I am quite willing to do that. Of course, our point here is that if you have the main locating points and you fulfill the requirements of the main locating points with the cam, and this cam does correspond 100 per cent with Mr. Gordon's drawing of the cam as contained in the Exhibit MM. Now, if we make a cam in accordance with that drawing, and we find that it coincides at the three reference points and gives the same result, then there can't be any appreciable variation between the plate model and the part from which this drawing is made. That is, your three reference points will locate the thing. The location then there fulfills the requirements here, but it does not fulfill the requirements at all when we get to the crucial part.

Mr. Michael: He is explaining the variation in dimensions.

(200) A. Supposing I were to take 1/16 of an inch off this cam in here I wouldn't disturb the points, the three

points you are speaking of, but I would disturb it in between those points.

Q. (By Mr. Farley): That is right. A. And the shape of this cam is to put the tool in just as shown on that drawing.

Q. If you take these three locating points, and you keep the contour of the connecting line between those two locating points exactly as shown in your drawing, and follow the same dimension, if we get the same result at the two locating points, which is on the line 945 of Exhibit MM, then we get the same result at the line marked O, and then if this cam is precisely the same contour of the model Exhibit 211 as it is on your drawing Exhibit MM, we should of necessity then get the same result as you have depicted in your drawing?

Mr. Michael: Not at all, unless your dimensions in the mechanism are the dimensions used. Not at all. It is perfectly clear.

Mr. Farley: I don't think it is, but we will be pleasantly disagreeable about that.

A. It is a fact nevertheless.

Q. (By Mr. Farley): If you will furnish us then with the complete data by means of which you got the results shown in the Exhibit NN in the use of the cam such as shown in Exhibit MM, we would like to have the opportunity of checking that. A. I think we can probably.

(201) Mr. Farley: And I will defer examination on that particular point.

* * * * *

---

(202) Todd L. Moise was thereupon recalled as a witness, and having been previously duly sworn, resumed the stand and testified further as follows:

Cross Examination by Mr. Farley.

Q. You are the same Todd L. Moise who testified formerly in the Case? A. Yes.

* * * * *

(228) Q. Do you remember your cross examination, Mr. Moise, concerning the use of the straightening operation? A. I remember your bringing that question up.

Q. Yes. A. And asking me some questions about it.

Q. Yes. Now, have you got—now, let me see page 3 of Exhibits "Z" and "Z'." A. Yes.

Q. The figures taken there were posted over from page 4? A. Yes.

Q. And from page 5? A. Yes.

Q. And from page 6; that is correct? A. Pages 4 and 5 were made from page 6, and so forth.

Q. Have you got that Exhibit "Z" that you had before you when you were on the stand before? A. I have.

Q. You made certain penciled corrections to those figures during the cross examination before. Did you make the same penciled corrections upon the corresponding sheets of Exhibit "Z'"? A. I did not make penciled corrections. You asked me if that was included how much difference that would make in the amount of the damages or of the amount of the profit, and I figured that up roughly at the time. I have since gone more carefully into the amount the difference which that would make if it was included, and if you wish, I can give you that amount as I see it, which, of course, would make a more adequate correction if it is to be corrected.

Q. Yes. When you prepared Exhibit "Z'," however, you did not **(229)** include any of the figures that you penciled on sheets 6, or 5, or 4, of Exhibit "Z," is that correct? A. That is true.

Q. Now, if a straightening operation were required on the Melling machines and such a straightening operation were not required on the shapers, there should be a revision of the figures as contained in your report, should there not? A. It would reduce it, but as I figured it, I would give you the amount if that proved to be the case, and it is so ruled.

Q. Well, will you take your sheet 6 of Exhibit "Z'"? A. Yes, sir.

Q. And, in the column "Man Hours Per Shaft," the 4th column from the right of the page, under the heading with "Melling Machines," the time "Man Hours Per Shaft" is given as .01333? A. Yes.

Q. .01333? A. Yes.

Q. And, will you add to that the time for the straightening operation? A. No, I couldn't do it that way. Of

course, that is based purely on so many shafts per hour divided the way in which these corrections—if I did, as an accountant, if I would make that correction, would be to my experience, the corrections of .50 minutes per shaft, and having found the cost of .50 minutes per shaft as I have done it from and by experience, I would extend that by the cost per minute of labor and overhead, and so arrive at a difference for each year which would reduce the profit by a total of—if you wish it, as I have it, subject to check, of $51,240.60.

* * * * *

(232) Q. (By Mr. Farley): I see. Well, your answer was that it would reduce the profits $51,000. Now, the computation, you mean, Mr. Moise, had only to do, did it not, with the figure obtained by you and given by you as $42,719.94? A. Yes.

Q. That is, you changed that $42,000, which you have put there as a saving through use of the Melling cam lathes, and that becomes, through conversion, that figure, instead of a savings, **(233)** into a loss of some $9,000, isn't that true? A. That would convert that into $8,520.66 loss.

Q. Loss? A. Yes, if that is used.

* * * * *

(245) Q. Now, on page 2 of your own account, both as originally submitted and as amended, you have this:

> "Burden ratios used are probably too low, as, for most periods, data from which the ratios could be determined, was not supplied by defendant for many of its low production months."

Now, insofar as there was a great deal of talk about burden and burden ratios on cross examination by Mr. Spohn, but if the straightening operation were taken into account **(246)** throughout these computations and the figures show a loss rather than a profit the use of the overhead burden ratios as used in the cost summary cards of the Ford Company would increase rather than decrease the loss? A. Yes, certainly, but that would make no difference in trying to get at the truth.

* * * * *

(247) Q. (By Mr. Farley): When it comes to the question of burden as given by the overhead burden figures which you have used throughout your computations, would that burden, overhead burden figure include a large number of items; that is right, isn't it, Mr. Moise? A. Probably.

Q. Yes. Such as maintenance, space, depreciation, repairs, taxes, and so on? A. Yes; supplies and numerous other things.

Q. Yes. Now, if as in the matter we are now considering, you are going to compare the cost of two different machines used in the same department—you follow that? A. Yes.

Q. And one machine, we will say, let us say, to make it simple, cost twice as much as the other machine. Now, in determining burden it would be better and more accurate, would it not, to figure depreciation according to the costs of those respective machines rather than taking the lump sum burden figure which applies to the whole department, and in which there are 45 or more different operations, is that true? A. Providing you knew that the life of the two machines were the same, and also based on the cost of production on the machine.

Q. Yes, yes. A. It might be the ideal way to do it.

Q. Yes. And, it would be the ideal way to do it insofar as maintenance and every other one of the larger items, repairs, tool costs, etc., were involved, that is true, isn't it? A. I may say that if you could get a sufficient number of the important **(248)** items to fairly get the true cost of them when one machine is compared with the other.

Q. Yes. A. That would be the way to do it.

Q. Yes, that is right. A. But not to take a few when you could not get all the important ones.

As you know, many companies carry machine cost in which they allocate cost of overhead to each machine. That makes this kind of thing relatively simple. But that was not done by the Ford Motor Company.

* * * * *

IN THE

Supreme Court of the United States

OCTOBER TERM, 1942

No._____

FORD MOTOR COMPANY,
Petitioner,

vs.

THE GORDON FORM LATHE COMPANY,
Respondent.

Transcript of Record

On Petition for Writ of Certiorari to the United States Circuit Court of Appeals for the Sixth Circuit

VOLUME II.

Defendant's Record (Continued).

I. Joseph Farley,
1664 National Bank Bldg.,
Detroit, Michigan,

Cooper, Kerr & Dunham,
Woolworth Bldg., 233 Broadway,
New York, New York,
Attorneys for Petitioner.

Lecher, Michael, Whyte & Spohn,
110 East Wisconsin Ave., Milwaukee, Wisconsin,

Richey & Watts,
Union Commerce Bldg., Cleveland, Ohio,

Swan, Frye & Hardesty,
Ford Bldg., Detroit, Michigan,
Attorneys for Respondent.

No. .....

United States Circuit Court of Appeals

FOR THE SIXTH CIRCUIT.

THE GORDON FORM LATHE COMPANY,
Plaintiff-Appellant and Cross-Appellee,

vs.

FORD MOTOR COMPANY,
Defendant-Appellee and Cross-Appellant.

EQUITY No. 4564.

APPEAL FROM
THE DISTRICT COURT OF THE UNITED STATES,
EASTERN DISTRICT OF MICHIGAN,
SOUTHERN DIVISION.

TRANSCRIPT OF RECORD.

VOLUME II.

Defendant's Record (Continued).

LECHER, MICHAEL, WHYTE & SPOHN,
110 East Wisconsin Ave., Milwaukee, Wisconsin,

RICHEY & WATTS,
Union Commerce Bldg., Cleveland, Ohio,

SWAN, FRYE & HARDESTY,
Ford Bldg., Detroit, Michigan,
Attorneys for Plaintiff-Appellant and Cross-Appellee.

BODMAN, LONGLEY, BOGLE, MIDDLETON & FARLEY,
1400 Buhl Bldg., Detroit, Michigan,

COOPER, KERR & DUNHAM,
Woolworth Bldg., 233 Broadway,
New York, New York,
Attorneys for Defendant-Appellee and Cross-Appellant.

INDEX.

VOLUME I.

Trial Papers, Plaintiff's Record and Part of Defendant's Record.

Caption 1

Decree on Mandate 2

Report of Special Master 4

I. Nature of Invention and History of Litigation and of Defendant's Use of Machinery 5

II. Claims of Parties 9

III. Accounting Period, and Production of Shafts on Infringing Machines: Question of Notice 11

A. Beginning of Period 11

B. Production of Camshafts and End of Accounting Period 15

IV. Profits 17

A. Profits from Infringement 18

1. Standard of Comparison 18

a. Standard for Model A Shaft 21

(1) Pioch and Modified Walcott Machines 21

(2) Westinghouse Lathe 24

(3) Ford Cam Shaper 28

b. Standard for Tractor Shaft 34

c. Effect of Choice of Incorrect Standard ... 35

2. Savings from Use of Infringing Machines ... 36

a. Savings or Loss in Other Operations: Straightening 40

b. Savings in Cam-Roughing Operation 42

(1) Direct Labor Savings 42

(a) Speeds of Production on Model T Shaft 43
(b) Speeds of Production on Model A Shaft 44
(c) Speeds of Production on Tractor Shaft 46
(2) Other Savings: Overhead or Burden 47
(3) Offset of Loss from Scrapping Shapers 59
3. Apportionment of Profits..... 60
V. Damages: Reasonable Royalty..... 71
A. Conditions to Assessment of Reasonable Royalty 73
B. Amount of Royalty..... 74
VI. Questions of Clean Hands and of Increase of Recovery 81
A. Clean Hands 81
B. Increase of Recovery..... 84
VIII. Interest 93
Schedule A. Production of Camshafts on Infringing Machines 94
Schedule B. Proration of Production on Camshafts between Pioch and Walcott Machines, May 14, 1930 to March 15, 1931, inclusive..... 97
Schedule C. Comparative Costs on Cam-Roughing Operation with Walcott Lathes and Standards of Comparison 99
Clerk's Notice of the Filing of the Master's Report..... 101
Plaintiff's Objections to Master's Report..... 101
Exceptions of Defendant to the Report of the Special Master 103
Motion for Action Upon Master's Report and Objections Thereto 111
Affidavit of Todd L. Moise..... 111

Schedule I 115
Schedule II 115
Schedule III 115
Schedule IV 115
Notice of Motion for Action Upon Master's Report..... 117
Opinion of the Hon. Arthur J. Tuttle, District Judge, on the Objections to the Master's Report..... 118
Master's Order for Statement of Account, dated July 6, 1937 132
Exhibit A—Defendant's Statement of Account, filed September 27, 1937 138
Exhibit 7. Operation Sheet No. 1..... 151
Operation Sheet No. 2..... 152
Operation Sheet No. 3..... 153
Operation Sheet No. 4..... 154
Operation Sheet No. 5..... 155
Exhibit 10. Material Price Card No. 1..... 156
Material Price Card No. 2..... 157
Exhibit 11. Computation of Certain Items of Cost of Gordon Lathe Operation on Tractor Camshafts 158
Exhibit 12. Computation of Certain Costs Involved in Rough Grinding Operation on Tractor Camshafts by Landis 10 x 36 Grinders during Period July 1, 1925 to January 1, 1928..... 160
Exhibit B—Amendment to Defendant's Statement of Account, verified December 31, 1937..... 161
Ptf. Rec. Vol. III beginning line 18, page 29 of Typewritten Transcript (Mr. Spohn)..... 166
Master's Order for Statement of Account, dated October 29, 1937 169
Exhibit C—Defendant's Further Statement of Account, dated December 31, 1937..... 171
Ptf. Rec. Vol. III from page 34, line 26 to page 37, line 3 inclusive of Typewritten Transcript (Mr. Spohn).. 193

TRANSCRIPT OF TESTIMONY

(Designated by both Plaintiff and Defendant).

Appearances 195

PLAINTIFF'S RECORD.

FRED M. HOVIS (Defendant's Witness):
Cross Examination by Mr. Spohn..... 195
Cross Examination by Mr. Farley..... 208
Re-Cross Examination by Mr. Spohn..... 212
Re-Cross Examination by Mr. Farley..... 214
Re-Cross Examination by Mr. Spohn..... 216

HAROLD M. WOEHRLE (Defendant's Witness):
Cross Examination by Mr. Spohn..... 216
Re-Cross Examination by Mr. Spohn..... 220
Cross Examination by Mr. Spohn..... 227
Re-Direct Examination by Mr. Farley..... 239
Re-Cross Examination by Mr. Spohn..... 242
Re-Direct Examination by Mr. Farley..... 244

FRED M. HOVIS (Recalled):
Cross Examination by Mr. Spohn..... 244

HAROLD M. WOEHRLE (Recalled):
Cross Examination by Mr. Spohn..... 246
Cross Examination by Mr. Farley..... 249

NORMAN R. SCOVILL (Defendant's Witness):
Direct Examination by Mr. Farley..... 253
Cross Examination by Mr. Spohn..... 254

TODD L. MOISE (Plaintiff's Witness):
Direct Examination by Mr. Spohn..... 255
Cross Examination by Mr. Farley..... 258
Re-Direct Examination by Mr. Spohn..... 273
Re-Cross Examination by Mr. Farley..... 274

CHARLES GORDON (Plaintiff's Witness):
Direct Examination by Mr. Spohn..... 275
Cross Examination by Mr. Farley..... 280
Re-Direct Examination by Mr. Spohn..... 282
Cross Examination by Mr. Farley..... 283

LYLE E. BROUGHTON (Plaintiff's Witness):
Direct* Examination by Mr. Spohn..... 291

HOWARD JONES (Plaintiff's Witness):
Direct Examination by Mr. Spohn..... 296
Cross Examination by Mr. Farley..... 300
Re-Direct Examination by Mr. Spohn..... 302
Re-Cross Examination by Mr. Farley..... 303

MILES G. SLONIKER (Plaintiff's Witness):
Direct Examination by Mr. Spohn..... 304
Cross Examination by Mr. Farley..... 308

DEFENDANT'S RECORD.

CHARLES GORDON (Plaintiff's Witness):
Cross Examination by Mr. Farley..... 312

TODD L. MOISE (Recalled) (Plaintiff's Witness):
Cross Examination by Mr. Farley..... 423

---

* The Examination of Lyle E. Broughton by Mr. Spohn, appearing on page 291, was incorrectly stated in the Typewritten Transcript. It should be "Direct" instead of "Cross."

VOLUME II.

Defendant's Record (Continued).

MORRIS E. SHAWKEY (Defendant's Witness):
Direct Examination by Mr. Farley..... 427

SPENCER W. LIBBY (Defendant's Witness):
Direct Examination by Mr. Farley..... 436
Cross Examination by Mr. Spohn..... 444
Re-Direct Examination by Mr. Farley..... 454
Re-Cross Examination by Mr. Spohn..... 457

MORRIS E. SHAWKEY (Recalled) (Defendant's Witness):
Direct Examination by Mr. Farley..... 461

MIKE KLOPSIC (Defendant's Witness):
Direct Examination by Mr. Farley..... 464

RALPH T. MYERS (Defendant's Witness):
Direct Examination by Mr. Farley..... 481

VICTOR F. MARENTETTE (Defendant's Witness):
Direct Examination by Mr. Farley..... 486
Cross Examination by Mr. Spohn..... 493

A. M. WIBEL (Defendant's Witness):
Re-Direct Examination by Mr. Farley..... 495

CHARLES GORDON (Plaintiff's Witness):
Cross Examination by Mr. Farley..... 511

THEODORE R. DAHL (Defendant's Witness):
Direct Examination by Mr. Farley..... 512

GEORGE W. SMITH, JR. (Defendant's Witness):
Direct Examination by Mr. Farley..... 526

ALBERT APTEKAR (Defendant's Witness):
Direct Examination by Mr. Farley..... 529
Cross Examination by Mr. Michael..... 545
Re-Direct Examination by Mr. Farley..... 559

WILLIAM D. HUNT (Defendant's Witness):
Direct Examination by Mr. Farley..... 559
Cross Examination by Mr. Spohn..... 564
Re-Direct Examination by Mr. Farley..... 567
Re-Cross Examination by Mr. Spohn..... 567
Re-Direct Examination by Mr. Farley..... 567

HENRY G. PILLINGER (Defendant's Witness):
Direct Examination by Mr. Farley..... 568
Cross Examination by Mr. Spohn..... 579
Re-Direct Examination by Mr. Farley..... 585
Re-Cross Examination by Mr. Spohn..... 586

JOHN L. SCHMIDT (Defendant's Witness):
Direct Examination by Mr. Farley..... 588
Cross Examination by Mr. Spohn..... 605

RUDY EHRHARD HERKLOTZ (Defendant's Witness):
Direct Examination by Mr. Farley..... 606

WILLIAM F. PIOCH (Defendant's Witness):
Direct Examination by Mr. Farley..... 632
Cross Examination by Mr. Michael..... 663
Re-Direct Examination by Mr. Farley..... 697
Re-Cross Examination by Mr. Michael..... 722
Re-Direct Examination by Mr. Farley..... 727

NIELS BOESEN (Defendant's Witness):
Direct Examination by Mr. Farley..... 728

ALANSON P. BRUSH (Defendant's Witness):
Direct Examination by Mr. Farley..... 752
Cross Examination by Mr. Michael..... 801
Re-Direct Examination by Mr. Farley..... 813
Re-Cross Examination by Mr. Michael..... 820

ERVIN FRANKLIN (Defendant's Witness):
Direct Examination by Mr. Farley..... 825
Cross Examination by Mr. Spohn..... 843
Re-Direct Examination by Mr. Farley..... 846
Re-Cross Examination by Mr. Spohn..... 846
Re-Direct Examination by Mr. Farley..... 846
Re-Cross Examination by Mr. Spohn..... 847

JOSEPH HENRY ACHTEN (Defendant's Witness):
Direct Examination by Mr. Farley..... 847
Cross Examination by Mr. Michael..... 856
Re-Direct Examination by Mr. Farley..... 859

FRED HOVIS (Recalled) (Defendant's Witness):
Re-Direct Examination by Mr. Farley..... 863
Re-Cross Examination by Mr. Spohn..... 869
Re-Direct Examination by Mr. Farley..... 874
Re-Cross Examination by Mr. Spohn..... 877
Re-Direct Examination by Mr. Farley..... 881
Re-Cross Examination by Mr. Spohn..... 882

VOLUME III.

Defendant's Record (Continued),
Appendix to Record and Appeal Papers.

HAROLD W. HOGELAN (Defendant's Witness):
Direct Examination by Mr. Farley..... 883
Re-Direct Examination by Mr. Farley..... 889

PIERCE ALBERT WEYL (Defendant's Witness):
Direct Examination by Mr. Farley..... 891
Cross Examination by Mr. Michael..... 911
Re-Direct Examination by Mr. Farley..... 913
Re-Cross Examination by Mr. Michael..... 918
Re-Direct Examination by Mr. Farley..... 920
Re-Cross Examination by Mr. Michael..... 924

JAMES McEVOY (Defendant's Witness):
Direct Examination by Mr. Farley..... 925
Cross Examination by Mr. Michael..... 932
Re-Direct Examination by Mr. Farley..... 935

ALBERT APTEKAR (Recalled) (Defendant's Witness):
Re-Direct Examination by Mr. Farley..... 936
Re-Cross Examination by Mr. Spohn..... 939
Re-Cross Examination by Mr. Michael..... 940
Re-Direct Examination by Mr. Farley..... 942
Re-Cross Examination by Mr. Michael..... 943
Re-Direct Examination by Mr. Farley..... 945

I. JOSEPH FARLEY (Defendant's Witness):
Direct Testimony 951
Cross Examination by Mr. Michael..... 956

JOHN W. MICHAEL (Plaintiff's Witness):
Direct Testimony 962
Cross Examination by Mr. Farley..... 965

NORMAN R. SCOVILL (Defendant's Witness):
Re-Direct Examination by Mr. Farley..... 971

HAROLD M. WOEHRLE (Defendant's Witness):
Re-Direct Examination by Mr. Farley..... 980

WILLIAM F. PIOCH (Defendant's Witness):
Re-Direct Examination by Mr. Farley..... 1051
Re-Cross Examination by Mr. Michael..... 1055
Re-Direct Examination by Mr. Farley..... 1059
Re-Direct Examination by Mr. Farley..... 1060
Re-Cross Examination by Mr. Michael..... 1061
Re-Direct Examination by Mr. Farley..... 1063
Re-Cross Examination by Mr. Michael..... 1063
Re-Direct Examination by Mr. Farley..... 1063
Re-Cross Examination by Mr. Michael..... 1064
Re-Direct Examination by Mr. Farley..... 1064
Re-Cross Examination by Mr. Michael..... 1065

HAROLD M. WOEHRLE (Defendant's Witness):
Re-Direct Examination by Mr. Farley..... 1065
Re-Cross Examination by Mr. Spohn..... 1071
Re-Direct Examination by Mr. Farley..... 1080

DONALD M. RUSSELL (Defendant's Witness):
Direct Examination by Mr. Farley..... 1082

HAROLD M. WOEHRLE (Defendant's Witness):
Examination by the Master..... 1094
Re-Direct Examination by Mr. Farley..... 1095
Re-Cross Examination by Mr. Spohn..... 1096

ALEXANDER OBERHOFFKEN (Defendant's Witness):
Direct Examination by Mr. Farley..... 1097
Cross Examination by Mr. Michael..... 1114
Re-Direct Examination by Mr. Farley..... 1122
Re-Cross Examination by Mr. Michael..... 1124
Re-Direct Examination by Mr. Farley..... 1126
Re-Cross Examination by Mr. Michael..... 1127
Re-Direct Examination by Mr. Farley..... 1129

HENNING OHRN (Defendant's Witness):
Direct Examination by Mr. Farley..... 1130
Cross Examination by Mr. Michael..... 1137
Re-Direct Examination by Mr. Farley..... 1150

CHARLES HAJOVICH (Defendant's Witness):
Direct Examination by Mr. Farley..... 1151
Cross Examination by Mr. Michael..... 1159

ALBERT KIPTA (Defendant's Witness):
Direct Examination by Mr. Farley..... 1165
Cross Examination by Mr. Michael..... 1167

WILLIAM D. HUNT (Recalled) (Defendant's Witness):
Re-Direct Examination by Mr. Farley..... 1171
Re-Cross Examination by Mr. Michael..... 1174
Re-Direct Examination by Mr. Farley..... 1182

CHARLES GORDON (Recalled) (Plaintiff's Witness):
Re-Direct Examination by Mr. Michael..... 1183
Re-Cross Examination by Mr. Farley..... 1198

TODD L. MOISE (Recalled) (Plaintiff's Witness):
Re-Direct Examination by Mr. Spohn..... 1210
Re-Cross Examination by Mr. Farley..... 1240
Re-Direct Examination by Mr. Spohn..... 1258

APPENDIX

TO TRANSCRIPT OF RECORD

Designated Portion of the Testimony of the Witnesses Otto H. Schultz, Frank Steinke, Bert Weisel, William Cunningham, and Charles Gordon from Plaintiff's Exhibit 14—Patent Office Record, Interference No. 47,200—Herman W. Melling vs. Charles Gordon and Alfred Redlin.

OTTO H. SCHULTZ:

Q. 1, page 132, to and including Q. 22 and Answer, page 136:

Direct Examination by Mr. Earl..... 1261

Q. 45, page 140, to and including Q. 72 and Answer 145:

Direct Examination by Mr. Earl..... 1264

BERT WEISEL:

Q. 1, page 190, to and including Q. 55 and Answer, page 198:

Direct Examination by Mr. Earl..... 1268

XQ. 84 and Answer, page 203:

Cross Examination by Mr. Dennett..... 1274

XQ. 100, page 205, to and including XQ. 102 and Answer, page 206:

Cross Examination by Mr. Dennett..... 1274

XQs. 115 and 116 and Answers, page 210:

Cross Examination by Mr. Dennett..... 1275

XQ. 121, page 211, to and including RDQ. 150 and Answer, page 219:

Cross Examination by Mr. Dennett..... 1276

Re-Direct Examination by Mr. Earl..... 1281

RDQs. 153 and 154 and Answers, page 220:

Re-Direct Examination by Mr. Earl..... 1282

RDQ. 166, page 222, to and including RDQ. 177 and Answer, page 224:

Re-Direct Examination by Mr. Earl..... 1282

RDQ. 183, page 224 to and including RXQ. 193 and Answer, page 226:
Re-Direct Examination by Mr. Earl..... 1284
Re-Cross Examination by Mr. Dennett..... 1284

RRDQ. 207 and Answer, page 229:
Re-Re-Direct Examination by Mr. Earl..... 1285

FRANK STEINKE:

Q. 1, page 230, to and including RDQ. 66 and Answer, page 238:
Direct Examination by Mr. Earl..... 1286
Cross Examination by Mr. Dennett..... 1289
Re-Direct Examination by Mr. Earl..... 1291

WILLIAM CUNNINGHAM:

Q. 1, page 288, to and including Q. 16 and Answer, page 293:
Direct Examination by Mr. Earl..... 1292

XQ. 19, page 293, to and including XQ. 43 and Answer, page 298:
Cross Examination by Mr. Dennett..... 1295

RDQ. 44 and Answer, page 299:
Re-Direct Examination by Mr. Earl..... 1299

CHARLES GORDON:

Q. 56, page 402, to and including Q. 57 and Answer, page 403:
Direct Examination by Mr. Dennett..... 1300

Q. 66, page 405, to and including Q. 74 and Answer, page 409:
Direct Examination by Mr. Dennett..... 1300

XQ. 188, page 441, to and including XQ. 190 and Answer, page 442:
Cross Examination by Mr. Earl..... 1303

Master's Report in *National Tube Company v. Mark et al.*, Equity No. 4360 1305

Proceedings in Court 1305

Proceedings Before the Master 1306

Conceded Facts 1307

The 1909 Order 1308

Answers to Questions Referred 1309

Gains and Profits 1310

Savings 1312

Advantages Derived by Defendant From and Through Said Infringement 1315

License 1319

Special Damages 1321

Damages 1322

Interest on the Award 1325

Judge Sater's Opinion on Exceptions to Master's Report in *National Tube Company v. Mark et al.*, Equity No. 4360 1326

Special Master's Report, on Accounting of Profits, Opinion and Order, and Opinion and Order on Standard of Comparison in *O'Neal v. San Jose Canning Co.*, Equity No. 1307 1333

Special Master's Report on Accounting of Profits 1333

Master's Opinion and Order 1336

Special Master's Opinion and Order on Standard of Comparison 1340

Opinion of the Circuit Court of Appeals for the Sixth Circuit in *Gordon Form Lathe Co. v. Walcott Machine Co.*, No. 5511, Decided April 12, 1929, 32 Fed. (2d) 55 1344

Opinion of the Circuit Court of Appeals for the Sixth Circuit in *Gordon Form Lathe Co. v. Ford Motor Co.*, Nos. 7363, 7364, Decided January 12, 1937, 87 Fed. (2d) 390 1358

Final Judgment 1365

Notice of Appeal of Plaintiff..... 1369

Bond on Appeal of Plaintiff..... 1370

Plaintiff's Statement of Points To Be Urged on Appeal.... 1371

Notice of Appeal of Defendant..... 1373

Bond on Appeal of Defendant..... 1375

Defendant's Statement of Points To Be Relied On Upon Appeal under Rule 75(d) of Rules of Civil Procedure... 1376

Stipulation Re Waiver of Supersedeas Bond..... 1379

Stipulation Concerning Number of Copies of Record to be Filed on Appeal..... 1379

Stipulation Re Exhibits and Transcript of Record on Appeal in *Gordon v. Ford,* Nos. 7363-4..... 1380

Order Re Exhibits and Transcript of Record on Appeal in *Gordon v. Ford,* Nos. 7363-4..... 1381

Stipulated Designation of Contents of Plaintiff-Defendant Composite Record on Appeal..... 1382

Stipulation Extending Time to July 29, 1941..... 1399

Order Extending Time to July 29, 1941..... 1399

Stipulation (filed July 21, 1941) Extending Time to September 27, 1941, and Approval of U. S. Circuit Court of Appeals 1400

Stipulation (filed September 24, 1941) Extending Time to October 27, 1941..... 1401

Stipulation Extending Time to November 26, 1941, and Approval of U. S. Circuit Court of Appeals..... 1402

Certificate of Clerk..... 1403

VOLUME IV.

Plaintiff's Exhibits, Defendant's Exhibits and Main Record Exhibits.

PLAINTIFF'S EXHIBITS.

Exhibit		Page
D.	Cost Summary Card for A-6250 Camshaft covering January and March 1930 and September and October 1929	1404-5
E.	Cost Summary Card for A-6250 Camshaft covering May, August and October 1930 and March 1931	1406-7
E-1.	Cost Summary Card for A-6250 Camshaft covering March, May and July 1929. (Same as Exhibit 6 in Exhibit A)	1408-9
F.	Cost Summary Card for T-410 Camshaft covering January to June 1923	1410
F-1.	Cost Summary Card for T-410 Camshaft covering July to November 1923	1411
F-2.	Cost Summary Card for T-410 Camshaft covering January to June 1924	1412
F-3.	Cost Summary Card for T-410 Camshaft covering July to November 1924	1413
F-4.	Cost Summary Card for T-410 Camshaft covering April to September 1925	1414
F-5.	Cost Summary Card for T-410 Camshaft covering October to November 1925	1415
F-6.	Cost Summary Card for T-410 Camshaft covering January 1926 to October 1929	1416-17
F-7.	Cost Summary Card for T-410 Camshaft covering November 1928	1418
F-8.	Cost Summary Card for T-410 Camshaft covering October 1930	1419
F-9.	Cost Summary Card for A-6250 Camshaft covering August 1928 to January 1929	1420-21

EXHIBIT PAGE

F-10. Cost Summary Card for A-6250 Camshaft covering December 1927 to June 1928.....1422-23

F-11. Cost Summary Card for F-446 Camshaft covering April to September 1925..... 1424

F-12. Cost Summary Card for F-446 Camshaft covering October to November 1925..... 1425

F-13. Cost Summary Card for F-446 Camshaft covering January 1926 to March 1928.....1426-27

H-1. Production Cost Record for T-410 Camshaft covering November 1927..... 1428

L-1 to L-3. Pages from note book kept by witness Spencer W. Libby 1429-31

M. Operation Sheet compiled from notations appearing in Exhibit L. (Same as Exhibit 13 attached to Exhibit C) 1432-33

N. Operation Sheet for T-410 Camshaft dated 10-8-24. (Same as Exhibit 14 attached to Exhibit C).....1434-35

O. Correspondence between Ford Motor Company and Jackson Shaper Company.....1436-63

P-1 to P-14. Ford Work Orders for Repairs to Melling Lathes 1464-70

Q. Inventory card covering Ford Camshaft Shaper #10706 1471

R. Inventory card covering Ford Camshaft Shaper #11628 1472

S. Inventory card covering Ford Camshaft Shaper #12205 1473

W-1 to W-14. Study of operation of Melling Lathes....1474-87

X-1. Productive Labor and Overhead for Department 410 6-1-25 1488

X-2. Same—continued to 2-28-31 1489

X-3. Productive Labor and Overhead for F-446 Camshaft Machining 6-1-25 to 3-31-28 1490

Exhibit		Page
Y-1.	Inventory Card covering Melling Cam Turning Lathe Ford #36592	1491-92
Z-3.	Plaintiff's statement of account	1493-1513
Z-4.	Plaintiff's schedule showing computation of depreciation on Model T type cam shapers and Melling Cam Lathes	1514-16
Z-5.	Plaintiff's compilation of depreciation cost on Model T Cam Shapers and Melling Cam Lathes	1517-18
Z-6.	Plaintiff's computation of Maintenance and Overhaul Expense	1519-22
Z-7.	Plaintiff's computation of Cost of Tools	1523-24
CC.	Telegram dated 11-18-30 addressed to Ford Motor Company	1525
DD.	Telegram dated 11-18-30	1526
GG.	Release to White Motor Company from infringement of Gordon patent. (Included in Exhibit RR).	1540
HH.	Letter of White Motor Company to Mr. John W. Michael dated 12-24-29. (Included in Exhibit RR).	1532
RR.	Gordon Form Lathe Company agreement file	1527-57

DEFENDANT'S EXHIBITS.

209.	Copy of U. S. Patent No. 1,655,655 of January 10, 1928 to Herman W. Melling	1558-66
217 to 222.	Ford Purchase Orders for Melling Cam Turning Lathes	1567-73
232.	White Motor Company Departmental Correspondence dated 12-17-31	1574
233.	Same—dated 1-29-30	1575
254.	Ford Motor Company print dated 11-17-13 showing front view of construction of original Ford Cam Shaper with attachment superimposed in yellow	1576
255.	Same—end view	1577

Exhibit		Page
257.	Ford assembly print showing attachment for use in shaping Model A Camshafts	1578
258.	Same—sub-assembly	1579
259.	Same—showing removal of tools numbers 1 and 5	1580
263.	Sketch drawn by witness Pioch	1581
264.	Letter of Mr. Pioch to Mr. Farley dated 11-2-38	1582
266.	Computation by witness Pioch	1583
268.	Print Camshaft Shaping Machine Oberhoffken design—layout showing "tools to cut in both directions—speeds being equal"	1584
269.	Same—Layout to show individual relief of tools on return stroke	1585
272.	Sketch by witness Brush showing cutting action of Shaper Tool	1586
273.	Same—showing cutting action of Melling Tool	1587
276.	Brush sketch of two way cuts	1588
281.	Operation Sheet for T-410 Camshaft dated 12-21-27. (Same as Exhibit 15 in Exhibit C)	1589-90
289 (1 to 10).	Engineering Record of T-410 Camshaft, Forging Size	1591-95
290 (1 to 13).	Same—Finished Size	1596-1602
291 (1 to 3).	Engineering Record for A-6250 Camshaft, Forging Size	1602-03
292 (1 to 4).	Same—Finished Size	1604-05
293.	Ford print 9-Z-32, Shaper Tool	1606
294.	Ford print 9-Z-215, Melling Tool	1607
295.	Letter of witness Pioch dated 2-1-39 re: Surface Speeds of Shaper Tools	1608-09
296.	Sample Ford Purchase Order	1610
297.	Print of Ford Camshaft A-6250-A1	1611

EXHIBIT PAGE

298 (1 to 6). Engineering Record Fordson Tractor Camshaft, Forging and Finished Size.....1612-14

299. Summary of Ford Tractor Production..... 1615

301. Defendant's substitute pages for plaintiff's statement of account Exhibit Z-3 making 3 changes....1616-22

302. Same—6 changes 1623-29

304. Pages from Ford Parts Price List, effective 2-1-31 1630-33

305. Defendant's computation of Comparative Direct Labor Costs on F-446 Tractor Camshafts.....1634-35

306. International Harvester Company Requisition for Gordon Lathe dated 11-20-19..... 1636

307. International Harvester Company order for Gordon Lathe dated 11-24-19 1637

308. International Harvester Company installation of machinery card covering "Gordon Std. Cam Turning Machine" 1638

309. International Harvester Company disposition of machinery card covering same 1639

312. Copy U. S. Patent No. 1,512,995 of 10-28-24 to Herman W. Melling 1640-47

313. Copy U. S. Patent No. 1,634,550 of 7-5-27 to Herman W. Melling 1648-52

314. Print #C-2129 of Walcott Machine Company—"Assembly of New Style Parallel Type Tool Head" 1653

315. Print #KT-530-A of Walcott Machine Company—"Assembly of Tool Head" 1654

MAIN RECORD EXHIBITS.

Exhibit		Page
2.	Copy of U. S. Patent No. 1,542,803 of 6-16-25 to Chas. Gordon *et al.*	1655-69
5.	Amended Final Decree in Walcott case	1670-72
40.	Notice of Infringement dated 7-1-25	1673
41.	Cuts only of Walcott Machine Company advertising pamphlet	1674-75
42.	Mailing List	1676-83
48.	1929 Notice of Infringement	1684-86
52.	Photograph of Ford Shaper ¾ front view	1687
53.	Same—front view	1688
53-b.	Illustrated chart of Ford Shaper tool movements and actions	1689
55.	Record re: delivery of Gordon machine to Ford	1690
56.	Copy of Ford order for Gordon machine	1691-92
61.	Affidavit of I. W. Kindall re: Ford Camshaft Shaper	1693
62.	Ford Motor Company Print dated 5-18-15 showing Ford Camshaft Shaper, front view	1694
63.	Same—end view	1695
64.	Walcott letter to Ford 7-30-29	1696
71.	Copy of General Motors-Gordon Company Agreement. (Included in Exhibit RR)	1552-57
154-a, b, c, d.	Records produced by Ford in response to Court order	1697-1700

(269) MORRIS E. SHAWKEY was thereupon called as a witness on behalf of the Defendant, and having been first duly sworn, testified as follows:

DIRECT EXAMINATION by Mr. Farley.

Q. Your name, please? A. Morris E. Shawkey.

Q. And you live in Detroit? A. Off and on since 1910.

Q. You are employed by the Ford Motor Company, Mr. Shawkey? A. I am.

Q. How long have you been employed by the Ford Company? A. I first went with the Ford Motor Company in the spring of 1912.

Q. What are your present duties at the Ford Motor Company? A. General Foreman of the Production Department.

Q. What department are you in now? A. That is the clutch and carburetor, fuel pump.

Q. In your work at the Ford Company have you ever been assigned to any duties in Department 410, the Cam Shaft Department? A. Yes, I have.

Q. And when was that, please? **(270)** A. That was in December, 1928.

Q. What was the nature of your duty there? A. It was general trouble man, chiefly in quality.

Q. What particular type of cam shaft was being produced in that department at that time? A. The Model A cam shaft.

Q. Were you familiar with the Model T production? A. No, I was not.

Q. I don't mean cam shafts, I mean generally of the Ford Motor Company? A. Oh, in a general way, to some extent.

Q. Can you state whether or not the standards for Model A shaft were more accurate or precise than the Model T? A. Not any more than in a general way that I could say that the general quality in Model A was much higher than it was in Model T.

Q. Now, in connection with your duties in the T-410 Department, while they were producing the Model A shafts, was it any part of your duties to observe the operation of the Melling or Walcott cam lathes? A. Yes,

to some extent. I naturally when I went into the department,—I might start at the beginning.

When I went into the department they were having considerable trouble producing a quality shaft on a production basis, and it was my job to get in and find out what the troubles were in order to get a shaft of quality, as well as quantity.

Q. Do you know why you were assigned to that particular department? A. They had considerable trouble in producing enough shafts of the (271) quality to keep the assembly line running.

Q. As I understand it, the cam shaft department at that time was one of the departments whose production tended to slow down the general assembly proposition, is that right? A. That was the understanding they gave me when I went in there.

Q. Now, what did you find when you went into that department so far as the production of cams was concerned on the cam shafts? A. Our first trouble on the cams, we were getting into difficulty on finish. We required a very smooth finish and they were having considerable trouble in grinding to get that finish.

Q. Was the production of the cam part of the cam shaft held up any because of that, or did that in any way tend to hold up the production of cam shafts, I mean both the machining and grinding, and if so, just what was the nature of those difficulties, if you can recall? A. Well, we had a number of difficulties in finish. As I say, the finish on the cams were part of our troubles. We had trouble with the finish on the bearings as well, so that it was all along about the same.

Q. I am speaking, of course, in terms more of output, rather than in accuracy or quality of work. I mean was there difficulty experienced at the time in getting the required output from the grinding machines, the finish grinding machines? A. Well, we were held up naturally some by grinding. I think we had too many machines to take care of excess grinding.

We had a trouble of getting finish, and in what we call the semi-finish or rough grinding of the cams.

Q. Just what operations were performed in that department at that (272) time for bringing the cams of the

shaft from the rough size down to the finish size? A. A great many shafts would come through with excess stock for rough grinding.

We had to hold our semi-finish size fairly close in order to get a good finish and proper finish on the finished product.

A great many shafts would come through with excess stock. In fact, I have seen as much as ⅛ of an inch on cams to be ground off in finishing, rough and finish grinding.

Q. That was after the cams left the Walcott machine? A. After they came through from the Walcott, through the hardening, into the rough-grinding.

Q. Was it necessary at that time to perform a straightening operation on the cams immediately before they were put into the Walcott machines, do you know? A. Yes, it was.

Q. Were you at all familiar with the operation of the Model T cam shaft shapers? A. No, I was not.

Q. What was the standard at that time, if you can recall, in so far as the amount of stock left on the cams by the Walcott machine for the next operation? Let's see, before we go to that, you spoke of assembly finish grinding. Now I would like you to go over the operations. You have spoken of a straightening operation, and the next operation in the department, as far as the cams was concerned, was turning the cams on the Walcott machine, is that correct? A. Yes.

(273) Q. Now, then, the next operation was a semi-finish grind, is that right? A. That is referring to cams?

Q. That is referring to cams. That is all we are concerned about here. A. Then the next operation was hardening and then rough-grinding the cams.

Q. That is, a semi-finish grinding after they came from hardening? A. After they came from hardening.

Q. And after they had come off the Walcott machine? A. Yes.

Q. And then finally a finish grind, is that the idea? A. Yes.

Q. Now, how much stock, if you know, was left on the cams by the Walcott machine to be removed in the other grinding operation which came later? A. Our prints called for, as I recall, 40 thousandths. Our gauges were set for 40 thousandths, but the cams came through with

60 thousandths and from there up, but they tried to hold them about 60, because they wouldn't clean up in our rough grinding when we held them to 40 thousandths.

I remember that quite well because we had considerable trouble. They would drive for production of the machines, and in trying to get high production from the cam lathe they were neglectful of the tools.

The tool point would wear or burn off or break off and in that way we would get cams coming through, when they were rushing hard, as much as two-thirds of them would have cams, not all the cams, but cams on the shafts, would have as much as **(274)** ⅛ of an inch of stock.

Then I would go up into that section and raise merry Ned because we had too much stock to grind.

It would cause burning of the cams, it would wear our wheels, preventing us getting production on the rough grinding cam grinders.

Well, they would cut down again and try to get down to gauge size, which I would insist on, and immediately we would have trouble with cams not cleaning up, so it was a fight between trying to hold the small amount of stock to grind and their production.

Q. About what was your average daily production in that department, do you recall? A. I could hardly give you an average daily. As I recall it, it was about 2,000 a day when I went in there in December, 1928, and we reached a high of 9,000-some odd shafts in the middle of the spring.

Q. The middle of the spring of 1929? A. Of 1929, yes.

Q. Did you make any particular recommendations at that time to anyone in authority concerning the difficulties you were having? A. Yes. I felt at that time that I could add a second turning operation which would take, would tool up the shafts to grinding tolerances, within the grinding tolerances we had allowed on our print and increase the efficiency in our grinding.

I apparently sold them on that idea, for they ordered **(275)** some Melling cam lathes for that purpose.

Q. And who was foreman of the department at that particular time? A. A man by the name of Harry Klan.

Q. Do you know a man by the name of Myers, Ralph Myers? A. He came in in the late spring of 1929.

Q. So Myers was in the department during the time you were in there, too? A. Yes.

Q. And what was Myers' position in the department? A. He was general foreman.

Q. He succeeded Klan, is that the idea? A. He did.

Q. Just with whom did you take up this matter of ordering additional Melling machines; was it Myers? A. No, as I recall—

Q. (Interposing): Or Herklotz? A. As I recall, it was before—

Q. (Interposing): Myers came into the department? A. Yes. Naturally on anything like that, where there is an added expenditure and added operation, I would talk it over with a number. I talked to Harry Klan on it, and as I say, Harry Klan, I mean to say the general foreman, I think it was in Mr. Klan's time that he was in there, and if I recall right, I talked to Mr. Smith, the building superintendent.

Q. Do you know where Klan is now located? A. No, I don't.

Q. He no longer works for the company, is that the idea? A. He left the company just before Myers came into the department.

Q. Well now, did the company act upon your recommendation and buy any additional Walcott machines? **(276)** A. They did.

Q. And do you know when those machines were bought? A. No, I couldn't say as to time. They came in in the spring of 1929.

Q. Do you know whether they were ever used for this third operation? A. No, we never used them.

Q. Do you know what use they were put to, if any? A. Yes, they were used, whether they were all used, I know there was one or two of them used for turning the eccentric on the Model B cam shaft.

Q. Do you know when the Model B type of job was put into production at the Ford Company? A. In 1932.

Q. And the Model B shaft was in all respects similar to the Model A, was it not, except for the eccentric? A. Yes. Then a slight difference in the form of the shaft.

Q. Now, did you know anything about the output of the Walcott machines per hour, or is that any part of your

job? A. No, it was not really a part of my job. I naturally had to watch costs, had to figure costs along with changing operations, or in making a quality shaft I had to stay within reason, but I checked up a little more on the Walcott lathe, due to requesting more machines, for the expense, operation, and as I recall, we had a production, or figured the production, that is, we could get 400 a day from a Walcott machine during the operation as it was at that time.

Q. 400 a day? A. I mean for each operator. An operator ran two machines.

(277) Q. That was the production you figured upon getting, is that the idea? A. Yes.

Q. Do you know whether you obtained that production from those machines? A. I think they did, but I couldn't say. That was what we figured we would get day in and day out from a machine when it was in operation.

Q. And how many would that be then per machine, or how many hours did you work the machines? A. 8 hours a shift.

Q. Do you know whether you worked those machines the full eight hours of the shift, or whether they were down for lunch time, or what happened in that respect? A. Well, they were under both conditions. It depends a great deal on the amount of production they required, what was coming off the machines, how many machines were running. If they had particular trouble that was customary, if we had particular trouble on the machines, we were short of production in that particular operation, we would run them through lunch hour.

Q. Then as I understand it at the time when you went there the production was 2,000 a day and you probably did not run the machines during the lunch hour? A. I don't believe so.

Q. But when you got up to the higher production of 9,000 a day you probably then found it necessary to run the machines during lunch hour? A. That is what I mean by times we would do that.

(278) Q. Do you know whether you had any particular difficulty in maintenance of those machines, in keeping them operating? A. Not any more than what I could see when I would complain of sizes of cams, and it would always

be one of their alibis that it was caused by trouble with their machines, and keeping it in order.

We had a number of maintenance men working there and mainly working on those machines all the time.

Q. Now, were you at any time given any particular assignment by anyone at the Ford Motor Company to see what records, if any, might be available at the Ford plant in connection with this camshaft operation? A. I don't believe I just got that question.

Mr. Farley: Read it, please.

(Question read by the reporter.)

Q. Do you understand that? A. No.

Q. Well, let me put it this way! When did you first become acquainted with me and under what circumstances? A. That was last October a year ago, I believe. I was called into Mr. Smith's office, the building superintendent of the motor building, and told to report to Mr. Crawford's office to a Mr. Coulton to be assigned in looking up records and information regarding the cam operation on the Walcott lathe and whatever was required.

Q. And did you make any searches in and around the Ford plant to locate records? A. Yes.

Q. And as a part of that work you were requested, were you not, **(279)** to interview men who had particular familiarity with the camshaft department through the years? A. Yes. I was told to find what men I could, any one of whom was connected with that work and knew from personal experience what we did.

Q. I see. How long did you spend on making those investigations and surveys, a matter of several months, 2 or 3 months? A. Yes, it amounted to 2 or 3 months.

Q. Now, do you know a man by the name of Spencer Libby? A. Yes.

Q. Just who was Mr. Libby, please? A. He is a foreman of what you call the steering gear department.

Q. Do you know whether Libby was ever connected with the camshaft department? A. Only as much as he told me he was.

Q. I hand you a notebook which has been marked Exhibit L in this case and will ask you if you ever saw that before, and if so, explain what it is. A. Yes, I have.

Mr. Spohn: Now, if your Honor please, may I have a preliminary question before the witness starts to explain that?

The Master: Yes.

Mr. Spohn: When did you first see this book now handed to you, designated as Exhibit L?

A. It was in the fall, a year ago.

Mr. Spohn: The first time you saw the book was in the fall of 1938, you mean?

A. No, that would be the fall of 1937.

Mr. Spohn: Oh, the fall of 1937?

(280) A. Oh, yes.

Mr. Spohn: I object to the question as incompetent, irrelevant and immaterial, the witness having no familiarity with the book prior to the fall of 1937. That is Exhibit L, your Honor. There was examination made on it before.

Mr. Farley: I don't think any comments are required on my part to that objection, your Honor.

The Master: Where did you find this book?

A. Mr. Libby gave it to me.

Mr. Spohn: Another objection is it is completely hearsay as to this witness.

The Master: Well, I was just wondering whether it comes in the books and records exception to the hearsay rule.

Mr. Farley: I might state, if the Court please, that I am going to produce Mr. Libby as the next witness to fully identify the book. My purpose of the examination of Mr. Shawkey at this time is to show how the book was discovered, how it came into his office, and what he did with it afterwards.

Mr. Spohn: That was not the question. It was to explain what the book was.

The Master: Yes.

Mr. Spohn: That is altogether different. If counsel is limiting this question, all right.

Mr. Farley: He explains that was a book handed him by Mr. Libby. After he answers, if you want to move to strike out any part of it, you may.

The Master: Well, I will take the testimony subject to the objection and subject to identification of the record by (281) Mr. Libby, and rule upon the question of its admissibility at that time. Now, what was the answer?

(Answer read by the reporter.)

Q. The answer so far says you have seen that book before. Where did you get that book? A. From Mr. Libby.

Q. What did you do with the book after you got it? A. I took it to Mr.—our time study man, Mike Klopsic.

Q. What was your purpose in taking the book to Mr. Klopsic? A. There was found in the book a copy of the operation of the time study, and Mr. Klopsic—in my next call I took the book to him to see if we had any records of that time study at that time and if he recognized anything in this time study that was copied here. I didn't know whether I had anything of value or not.

Mr. Spohn: I move all the answer of the witness be stricken. It is based on hearsay in the first place, and an assumption of a copy of a time study record in a book with which he is not familiar.

The Master: It certainly looks like hearsay testimony to me.

Mr. Spohn: I move it be stricken.

Mr. Farley: I haven't heard anything, if your Honor please, that I would characterize as hearsay. The witness said that he took the book—will you read the answer?

(Answer read by the reporter.)

Mr. Farley: There is not any hearsay there.

Mr. Spohn: If your Honor please, he says it is a copy of a time study record. How does he know about that? I move (282) the answer be stricken.

The Master: I will withhold ruling on that objection until I hear the rest of this testimony.

Q. (By Mr. Farley): Mr. Shawkey, are you familiar with operation sheets that are in use at the Ford Motor Company? A. I am.

Q. Is there anything about the material written in that book that would in any way, with your familiarity with

those operation sheets, lead you to believe it resembles such an operation sheet of time studies? A. It is made out in such a way that it looks like a duplicate or a copy of a time study.

Q. Now, will you proceed with your answer as to what you did with the book?

Mr. Spohn: If your Honor please, I resume my objection. If the witness is present in court who prepared that exhibit, the best evidence of what that exhibit contains, or its nature, whether it is a time study, can be given by that witness, not what its similarity may be or something else. Everything he knows is hearsay.

The Master: Why don't you withdraw this witness and put Mr. Libby on the stand temporarily?

Mr. Farley: All right, I will withdraw the witness temporarily.

(Witness excused temporarily.)

Mr. Farley: Mr. Libby, will you take the stand?

---

(283) Spencer W. Libby, a witness called on behalf of the Defendant, and having been first duly sworn, testified as follows:

Direct Examination by Mr. Farley.

Q. Your name, please? A. Spencer W. Libby.

Q. And you live where, Mr. Libby? A. 918 Stevens Avenue, Highland Park.

Q. You are employed by the Ford Motor Company? A. That is right.

Q. How long have you been employed by the Ford Motor Company? A. Since October 16, 1916.

Q. Until the present date? A. Until the present date, yes, sir.

Q. And what are your present duties at the Ford Motor Company? A. General Foreman of the Steering Gear and Pedal Department.

Q. Now, in your work at the Ford Company, were you ever assigned to Department T-410, the cam shaft department? A. That is the department I started in at the Ford Motor Company.

Q. And when was that? A. October 16, 1916.

Q. And at that time how was the Ford Company machining the cams of its cam shafts? A. Well, as I recall it, they had a milling operation on the cams, followed by a grinding operation. That is the operation.

* * * * *

(284) Q. (By Mr. Farley): The milling operation which you are speaking of, Mr. Libby, I show you Defendant's Exhibit 145, pages 9-10, from the American Machinist, of July 3, 1913, and this is entitled, "Ford Cam Shaft Milling Methods." This Exhibit 145 was introduced during the trial before Judge Tuttle, and I call your attention to the showings of Fig. 3 on page 10. You hadn't seen that particular publication before, I don't think, but will you examine that Fig. 3 and state whether or not that is the milling operation you were referring to? A. Well, it looks similar. I couldn't positively say at that time.

Q. That particular milling operation was one in which you used but 3 shafts? A. 3 cutters and 3 shafts.

Q. And what was next used by the Ford Company after that? Let me put the question this way: How long did you stay in the cam shaft department from 1916, how long were you there? A. Well, I just don't recall the exact date, because whatever time they went on War work, I know I was transferred from the cam shafts up to the War work, on the Liberty motor cylinders.

(285) Q. Did the Ford Motor Company throughout your period of experience in the cam shaft department continue to use the milling operations such as shown? A. No, sir; they did not.

Q. What did they use after they discontinued the use of the milling machines? A. Ford shapers.

Q. Ford cam shaft shapers? A. Yes, sir.

Q. At the time they were using the Ford cam shaft shaper what was your duty in the department, or what was your job? A. I was assistant to the general foreman. In other words, he was the direct supervisor over that department. I had one shift under him, one of the three shifts that were under him.

Q. And in your job in having charge of one of the shifts, was it a part of your duty to know all of the operations that were performed in the department? A. Yes, sir.

Q. And was it part of your duties to know the times required for the various operations? A. That was absolutely necessary.

* * * * *

(286) Q. (By Mr. Farley): Will you please tell, what operation, if you remember, Mr. Libby, was done upon the cam shafts prior, immediately prior to the shaping operation? A. Yes. I can recall it was turned, front and rear bearings.

Mr. Spohn: Slowly. I want to copy that.

Q. Now, I show you a book, Mr. Libby, which was marked for identification here as Exhibit L, and ask you if you know what that is? A. Yes, sir; I do know what that is.

Q. Will you please tell the Court what it is? A. Well, sir, this part here—

Q. First, generally what the book is. A. The book was the property of myself when I was in the department 410, and I kept various records from time to time, always having the time study at my finger tips. That was necessary for any person running a job.

Q. Did the Ford Motor Company when you were foreman of the department have time studies that were made by time study men who **(287)** checked the time of the jobs? A. Oh, yes, sir.

Q. Now, will you state to the Court what memorandums, if any, are in that book? A. There are several memorandums in that book. The one here—

Mr. Spohn: I wonder if his Honor has a copy of that? I might give you the photostat, if you care to see it, your Honor.

Q. Will you refer to the page that is marked Exhibit L-1 and state to the Court what that is? A. I didn't quite get that, Mr. Farley, if you please.

Q. Will you refer to the page that is marked Exhibit L-1 and tell what the various notations and figures on that page are? A. That was a duplicate of the time study on that particular part.

Q. And in whose handwriting is that? A. That is in my handwriting.

Q. And where did you get the data or information that is contained on that page? A. I copied this from the time study.

Q. And the time study, where did you get the time study; what was the practice with respect to time studies? A. Well, there is a book left in each department of the time. It is in a folder there. It is in there and the foreman has access to it to find out various items at different times.

Q. And the figures which you put in your book, were they copied at that time, do you recall whether they were copied from a time study? A. Oh, yes, they were copied from a time study, I am positive of **(288)** that.

Q. Now, will you refer to your book there and to the operation 12, the number 12. Will you read that notation, just what you have in the book. A. "Shape Cams."

Q. "12," Shape Cams. A. .120.

Q. What does the .120 mean? A. Why, that means the time established by the time study on that particular operation.

Q. What machine, to the operation of what machine does that refer? A. That refers to the cam shapers.

Q. That were used at that time at the Ford Motor Company? A. Yes.

Q. Now, let me ask you as to the operations that are numbered here. Just what do they represent? Do they represent all or only part of the operations that were required in that department to machine a completed camshaft? A. A, B, C, D.

Q. Where were those operations performed? A. I do not know that.

Q. That is, you do not know what? A. Where those operations were performed, because this was not in my department at that time.

Q. From your own personal observation you never saw those operations? A. No, sir; they were never there, and also operations 1 and 2.

Q. Now, as to the operations that were performed in your department, **(289)** will you please refer to those? A. They begin at No. 3. "Center both ends."

Q. Now, the next operation. Just glance over those operations. A. "Center both ends." Then you put the shaft in an arbor press and you rough-straightened it.

Q. Then the next operation? A. Rough turn center bearing.

Mr. Spohn: Will you read the number, Mr. Libby?

A. Yes, sir; that was operation—center both ends was 3. Rough straighten is 4. Rough turn center bearing was 5.

Q. Go ahead, please. A. Sir?

Q. Continue, please. A. No. 6 was between the cams.

Q. Rough turn between cams? A. Yes. No. 7 was straddle.

Q. No. 8? A. Was turn the gear post.

Q. Now, your notebook just simply says gear post? A. That was just an abbreviation that I entered.

Q. Your notebook for No. 9 says what? A. Drill L hole.

Q. Your notebook says "L hole"? A. Yes. I will repeat exactly the book.

Q. The next one is what? A. End bearings.

Q. What does that notation mean? A. The front end bearing.

(290) Q. I mean what was the operation. A. On a lathe.

Q. A turning operation? A. Yes, sir.

Q. All right. Now, the next one. A. Rough grind center bearing.

Q. And the next is what? A. Shape cams.

Mr. Spohn: What is that number?

The Master: No. 12.

A. Shape cams is No. 12, sir.

Q. How do the notations in the notebook jibe with your recollection of the particular operations that were performed in that department? A. That is the same. I have the same recollection as that.

Q. You have a present personal recollection of all those operations having been performed? A. Yes.

Q. Without referring to the book, awhile ago when you had not referred to the book you said that the operation immediately preceding the operation of shaping the cams was turning the end and center bearings.

Mr. Spohn: The witness didn't say that.

Mr. Farley: All right, read back and see what he did say. That is my recollection.

Mr. Spohn: My recollection is different.

Mr. Farley: I don't think it matters.

(Answer read as follows: "Yes, I can recall it was turning **(291)** front and rear bearings.")

Mr. Farley: Turn front and rear bearings. You made a notation and I didn't.

Mr. Spohn: Failing accuracy of memories.

Q. Now, after having consulted the book, what is your recollection on that, or just what do you mean by you turned front and rear bearings? Which operation is that on your book? A. In the book?

Q. Yes. A. All I have in here on No. 10 is end bearings. That is the same thing, of course, end bearings.

Q. Now, I will ask you again what operation now then was performed immediately prior to the shaping of the cams in the camshaft shaper? A. Rough grind center bearing.

Q. Was any operation performed intermediate the rough grinding of the center bearings, or between the time that the center bearings were performed and the cams were shaped in the shaper? A. Were there any operations between those two?

Q. Yes. A. No, sir.

Q. Will you state how many operations all told are listed on these pages of the book to which you have been referring? A. How many operations are listed?

Q. Yes. You referred first to the page which is marked Exhibit L-1. A. Yes.

Q. And that contains a number of operations, beginning with A, **(292)** running from A to D, and then beginning with 1 and running down to 19. Now, will you refer to the next page of the book and that contains operations running from 20 to 42. A. That is on the next page only.

Q. Yes. A. Yes, sir.

Q. And will you glance over the operations on that page without taking time to read them all into the record, and state what those operations, or just what those notations are supposed to represent? A. All right. I will have to continue from operation 13, is that right?

Q. Yes. Let me, in order to shorten this, the operations that are listed in this list are what? A. 13 was cyanide.

Q. Yes. A. Then polish cam, re-sink and remove cyanide from holes.

Q. Now, let me ask you, Mr. Libby, so that we won't take the time to read them all, are these other operations which are given certain numbers and running from operation 13, continuing to 19 on the bottom of the page, and beginning with 20 on the next page there and running to 42, and then on the third succeeding page running to 43 to 45, were they all, rather, do they refer to operations that were performed in your department? A. Yes, sir. This here was entirely what was performed in my department.

Q. Is that a complete record of all of the operations that were required in Department 410 for the fabricating of the cam shafts? **(293)** A. That was all on the camshafts.

Q. Yes. And all those operations were performed on the camshafts in the department under your supervision as foreman, is that correct? A. With the exception of the first A, B, C, D, 1 and 2.

Q. All right. And do those notations conform with your present personal memory of the operations as performed in that department? A. Yes, sir; they refresh my memory and they bring the job back to me. It is so long ago I can't remember everything in detail without looking at this book, but when I do it comes back to me.

Q. Very well. Now, these particular pages to which we have been referring, do they have any date on them? A. These particular pages have no date.

Q. Can you state just when you made that list in your notebook; have you any way of establishing the date or approximately the date when you made that compilation? A. This was made, whatever it was, was previous to any changes made in operation. That is, when we were doing that operation. There was nothing else in the camshaft department at that time to do it.

Mr. Spohn: Just a minute, Mr. Farley. Will you read the question and answer?

(Question and answer read by the reporter.)

Q. Are there any other dates in the book, Mr. Libby, that would help you to establish the date when you made that list?

Mr. Spohn: If your Honor please, I submit that the witness has answered the question with respect to those two **(294)** pages.

The Master: I will allow counsel to further try to bring out his memory on that point. I will overrule the objection. Read back the question.

(Question read by the reporter.)

A. Well, here when these specials were made.

Q. You are referring to a page of the book which is marked Exhibit L-2? A. That is right.

Q. All right. Proceed. A. This date here, was made on the 4th, 1924, 2nd, 3rd—I can't say whether that is the 4th or 6th.

The Master: 4-4-24.

Q. Now, in whose handwriting are the notations on the page specials? A. They are mine.

Q. Is that in your handwriting? A. Yes.

Q. Those dates appearing there, 4-1-1924, 4-2-1924, 4-3-1924, 4-4-1924, did you put them in? A. I did.

Q. Were they put in at the particular date indicated, or some later date? A. What do you mean, were these put in?

Q. Yes. A. These were put in at the date indicated on that page.

Q. Can you state whether or not the compilation on the pages which are identified by the Exhibit No. L-1, whether those compilations were made before or after, or when they were made **(295)** with respect to those other dates, if you know? A. That I couldn't say. I couldn't say whether they were made before or after, but it must have been in that period, because I don't keep a book that long.

Q. Well, what would be your testimony as to whether those notations on pages L-1 were made in any of the years 1919, 1920, 1923, 1924, 1925, or what year? A. They were made in 1923 or 1924, that is, within the period of 12 months, I would say.

Mr. Farley: I offer the book and the pages thereof as Exhibit L-1 in evidence, and Exhibit L-2. There is a page here which was marked for identification as exhibit, apparently, L-3. This was Exhibit L and then Exhibit L-1 and Exhibit L-2. The whole book is L. I would suggest that the reporter mark the back of the page L-1 and the succeeding page also as Exhibit L-1, because they are all of the pages.

Mr. Spohn: If your Honor please, I object to the receipt of the document in evidence, and ask the right to cross examine the witness before you make a ruling on my objection.

The Master: Go ahead.

Cross Examination by Mr. Spohn.

Q. How old are you, Mr. Libby? A. How old am I?

Q. Yes. A. I was 48 the 24th of last November.

(296) Q. So when you came to the Ford plant then in 1916 you were— A. (Interposing): 27 years of age.

Q. You were 27 years of age? A. Just about that.

Q. What were your duties in the cam shaft department? A. When I first came in?

Q. When you came to the Ford plant in 1916. A. I was hired there and went to work on a Lo-swing lathe.

Q. How long did you work on that lathe? A. Not very long.

Q. Was it a month or a year? A. It was not very many weeks.

Q. And that was in October of 1916? A. That is right.

Q. Then what did you do after you got off working on that lathe? A. I was put machine-setting.

Q. Machine-setting? A. Yes.

Q. And how long did you work there, approximately? A. I want to give you something definite, if I can, on that. Maybe five or six months. It was not very long, anyway.

Q. Some time until 1917? A. Yes, it was early in 1917.

Q. Was it before or after the War started? A. Before the War.

Q. Before the War. And then what did you do after you got off of that job? A. Well, after I got off that job I had a section as a foreman.

Q. And where was that section? **(297)** A. The section as a foreman was on the—well, it was half hard end of the cam shaft and half of the soft end, what we call the soft end was before the part was hardened.

Q. And you were a foreman on that work? A. Foreman under the shift foreman at that time, yes.

Mr. Farley: Did you say under the soft end or under the hard end?

A. Half of each. I had the hard bearing grinding and part of the soft, because it was split in sections. The shift foreman has probably 4 foremen, 5 foremen under him on a shift at that time.

Q. How many men did you have under you? A. About 30 at that time.

Q. At that time? A. Yes.

Q. You were the foreman on the job? A. On that particular part, not on all the camshafts.

Q. And that job had something with respect to the grinding of the camshaft, you say? A. No.

Q. What did it have to do? A. The bearing, not the cams, the bearing. I ground the rear bearing and center bearing.

Q. But the rear bearing and center bearing were on the camshaft? A. Yes.

Q. How long were you foreman on that job? A. Well, sir, I was there until the War started, and then I got transferred on the War job.

Q. The War started in April, 1917, and your testimony is as soon as **(298)** the War started you got on that job? A. Yes.

Q. What was that War job? A. Liberty motor cylinders.

Q. Where was that job done? A. In the W building, W-2.

Q. The Liberty building? A. W, the letter "W."

Q. Mr. Libby, we are not quite as familiar with these buildings as you are. When you say "W-2," is that what you said? A. I had reference to W-2, the 2nd floor of the W building.

Q. Where is that located? A. On Manchester Avenue.

Q. In the City of Detroit? A. Highland Park.

Q. Were the Liberty motors built for the Ford Motor Company? A. I don't know. I was working on that one particular part.

Q. That part was what? A. Liberty motor cylinder.

Q. How long were you on that? A. Until Armistice Day.

Q. Then where did you go? A. Back to the cam shaft.

Q. What duty did you have then in the cam shaft department? A. I was a shift foreman directly under the general foreman.

Q. Who was the general foreman at that time? A. Alex McAlipine.

Q. And you were under him as a shift foreman? **(299)** A. Yes, there was three of us, one on each shift. I was one of them.

Q. How long did you stay on that job as foreman? A. On that job, I stayed there until the early part, that is, in Highland Park, if you refer to now that time, all with the Ford Motor Company in that particular department.

Q. In that department where you did the job? A. Regardless of where the job was done?

Q. Yes. A. Either May or June, 1925.

Q. Then where did you go? A. From there I went back to Highland Park on the Australian gas tank.

Q. What were your duties between the time of the Armistice and 1925 in that department? A. The same as I told you before. I was a shift foreman.

Q. You were a foreman on one particular shift? A. Yes.

Q. And that was what, an 8-hour day? A. 8 hours a day.

Q. You did that job all the way through until 1925? A. That is right.

Q. And you made your reports, did you, to your immediate superior? A. What reports have you reference to?

Q. Any reports you made, if you made any. A. There was nothing to make after the time sheets were made out, and any trouble, of course, we took that up with the general foreman.

(300) Q. But the department had a general foreman in it? A. Yes, sir.

Q. And you were working right under him? A. That is right.

Q. Your testimony is these operations set forth on Exhibit L-1 were copied by you from some sort of time study report? A. That is right.

Q. Have you got that time study report now? A. No, I haven't got it now.

Q. How often did you get time study reports? A. How often?

Q. Yes. A. You can request a time study report any time.

Q. Beg pardon? A. There is no set time for time study.

Q. I did not ask you that. I asked you how often you got them? A. As often as we requested them.

Q. Did you have the duty of requesting them? A. We did.

Q. I mean you. A. I did. When I was on the day shift if I wanted a time study on a particular job I could get it.

Q. How often did you request them? A. Well, that is hard to say, because sometimes you could run along for maybe three or four months, and if there is an operation change we immediately call the time study to get a new cost for the part.

Q. Is that the only time you called for a time study, is when you had an operation change? **(301)** A. Is that the only time?

Q. Yes. A. If I wanted to change something done on the job I would get a time study change. You might change a certain operation, or get a new machine, and then you would get the approximate time on that.

Q. Well then, there wouldn't be a time study unless there was something in the department that warranted a time study, a change of some sort or other in the operation, is that it? A. No, I wouldn't say that. What method the company has in the time department for changing their time study, or how the period is between the job, I don't know definitely, that is what I mean to say. There is a certain lapse of time. That may be five months, or six months, or maybe two months, but they have to bring the records up to date. The operation sheets are not allowed to get too old.

Q. The company determined that and not you? A. Not me. I wouldn't determine any time study. That is entirely out of our department.

Q. Did you have any duty as to whether you would have a time study or not? A. Whether I would have?

Q. Yes. A. If the operation was changed we sent in a request to change the time study.

Q. Will you look over these operations as they are set forth in Exhibit L-1 here? And indicate what change in operation was in there that required a time study. A. What change of operation was in here that required a time study?

(302) Q. Yes. A. At this time on this part?

Q. Yes. A. There is nothing. That represents, that part, that is supposed to represent—

Q. (Interrupting): There was no changed operation that was set forth on Exhibit L-1 that required any time study? A. There is no change at this time the way that part was manufactured. That there was copied from the original time study. When it was taken, I don't know.

Q. Now then, I want to be perfectly fair with you. You don't know the day upon which that time study was taken, do you? A. The day?

Q. Yes. A. The date I don't know, the date the study was taken, because time studies change so much from either a month or week or year or anything. I don't know that. But I do know that that was the operation on that cam shaft or part we were doing at that time.

Q. Now, Mr. Libby, will you look at these specials, Exhibit L-2? A. Yes.

Q. What do those specials mean? A. Well, sir, those specials, center front, rear and long—if you have a cam shaft print I could very readily show you what they represent. It is hard to explain that unless you have that. When a bearing was ground—

Mr. Farley: Before you proceed, Mr. Libby, I would like to say I am showing you print T-410 which is attached to Exhibit A and identified as Exhibit 1. Now, go ahead, please.

A. Now, if this bearing should come half a thousandth under-size **(303)** in regular manufacturing that was thrown out by the inspection department.

Mr. Farley: Excuse me a minute, please. In order that this will be in the record, when you said "this bearing" you were referring to the bearing shown in the blue-print at the left-hand side of the sheet.

A. I call it rear bearing.

Mr. Farley: And that is the rear bearing. Go ahead, please. Try to avoid saying "this."

The Master: When you refer to something, make a reference to it.

A. Center bearing. If that was ground half a thousandth under-size, why they would grind that down ten-thousandths and make a special. That is what they determine by the word "special," whatever bearing is there. That was 14 under-size bearings that day, and over here you got on the center and rear. That is what you have, and the long, the special bearing for length. This front bearing is a little too long for the regular standard part, so what we did, we took ten-thousandths off of here and made that for a special length bearing, instead of scrapping the part. That is what I mean by that part there.

Mr. Spohn: I will ask the reporter to mark a page of this book Exhibit L-3.

(The page above-referred to was marked Exhibit L-3.)

Q. I show you a page of your book marked Exhibit L-3. That exhibit has some red crayon on it and I will ask you who wrote that? **(304)** A. My little boy.

Q. Was this book at home? A. Always at home except when I worked at the Ford Company, and then I used to carry it on my person.

Q. There is a little of the writing in here that isn't yours. A. I will have to identify it if it is not mine.

Q. Did you always copy these time study records into a book? A. When a man runs a department, how otherwise is he going to base production? You have got to have something to start with. You couldn't go in there without knowledge of something. That is the first thing I do when I go in a new department. The first thing I do is get the operation sheet and get costs and see if there is anything we can improve on the job.

Q. Was this copy put in this book then at the time that you went on that job for the purpose of improving the production? A. When I went on the job?

Q. Yes. A. What particular job have you reference to?

Q. I don't know. You say these are put in the book so as to enable you to improve the work when you go into a department? A. Not necessarily.

Q. Why were they written in the book then? A. Well, I told you when I was on a job I always took the time study there and I took the operation sheets and it doesn't make any difference whether it is this week or next week, but when I first went in there I never had any access to these records.

Q. You didn't? **(305)** A. Oh, no, sir, an operator.

Q. When did you first have access to the time study records with reference to the cam shaft department? A. It was after the War.

Q. How long after the War? A. Definitely I can't say. It was after the War, I know that. I couldn't exactly remember the date.

Q. Your testimony was you came back to the Ford cam shaft as a shift foreman in 1919 after the Armistice? A. The Armistice was in 1918, wasn't it?

Q. 1918. A. Yes, I did come back after that.

Q. Were those records available to you then? A. They were.

Q. This is the only one of those time studies you put in a book like this? A. I don't remember. I found this in the attic.

Q. You found this in the attic in your home? A. In my home.

Q. Now, you state those time studies were available to you after 1918 when you were a shift foreman. A. As a shift foreman, yes, sir.

Q. What did you do with those time studies after you got them? What did you do with the papers or photostats, or whatever it was? A. They were kept in a file right there. We weren't allowed to remove them from the desk.

Q. Whose desk were they on? A. Our desk.

(306) Q. Your own desk? A. Yes.

Q. Were they always there? A. They were always there.

Q. For how long? A. Until they were changed. Then they were returned to the time study department and replaced by new ones which they had written.

Q. Well, you had available always at the plant this time study record on your desk, didn't you? A. Yes.

Q. Why did you copy it in the book, then? A. Why?

Q. Why did you copy it in this book, Exhibit L? A. On the day shift, when the day shift went home they were put away with the rest of the records of the men. That is what I mean to say, the time sheets, and when the timekeeper was gone they were put away. If you were on nights you had no access to them and you kept it in your own pocket.

Q. You were on the day shift? A. Sometimes, and sometimes on No. 3. 2 weeks days, 2 weeks afternoons, and 2 weeks midnights.

Q. Then they were not on your desk, were they? A. I said our desk, if you remember.

Q. How many men used that desk, Mr. Libby? A. The general foreman, the three shift foremen and the timekeepers.

Q. Did you make a copy of every time study that you had? A. That is the only one we had. There was only one part in that **(307)** department.

Q. Did you make a copy of every time study that was put on that desk? A. I don't remember whether I did or not.

Q. Did you ever make any other copies that you know of? A. In various departments I make them all the time.

Q. In various departments. What do you mean by various departments? A. The different departments I have been in. If I went in a new department I made it.

Q. Your testimony is when you went into a new department you made a copy of the time study? A. I always find out the time study.

Q. You did make a copy of the time study. You testified, did you not, that when you went into a new department you always made a copy of the time study? A. I

always made a copy and found out the production and everything on that job.

Q. Then thereafter you had available to you, did you, the regular time study records? A. I had it before. I couldn't make a record of it. I must copy it from something. I can't surmise that. I must prove to show I have it there. I can't go and time a job, because I am not that efficient in time study. I don't carry any stop-watch with me.

Q. And after you went into the department and after you made the copy of the first time study so that you knew the operation and time in those operations, your testimony is then you always **(308)** had, there was always submitted to you or your superiors time studies at intervals, that is right, isn't it? A. There were time studies at intervals, and when the time study was made at intervals the old ones were taken over by the time study department and the new ones placed on the desk.

Q. Have you any other book or paper or memorandum that shows— A. (Interrupting): I looked through everything.

Q. Have you any other book, paper or memorandum in which you did copy any other time study record? A. No, not in my possession I haven't right now. I can tell you the cost of every part that is made in my present department, which is over 198 pieces. I keep a minute cost of that every month, and the time study of that every month.

Q. Now, tell me again, just why did you copy down this time study in this book Exhibit L-1? A. Why did I copy it?

Q. Yes. A. Well, the reason I copied it was I couldn't go into a department and not know how much the thing cost. I always copy that for reference. It is natural that a man going into a place would find out what the part he is making would cost.

Q. Do we understand each other when you say you go into the place, you mean when you go in for the first time into the department, or what? A. No, when you go into a department, when you are transferred, in other words, to another department, it is essential that a man should know the cost of the part which he is making.

Q. And do I understand then this statement was written, this time **(309)** study was written in Exhibit L-1 when you were transferred to that department? A. It doesn't necessarily mean that.

Q. It may mean that? A. I don't say it does.

Q. It may mean that? A. It may not mean it, too.

Q. You don't know when this was written, do you? A. I know it was written previous to April, 1924.

Q. How do you know that? A. Because the date is in the book.

Q. It is on the next page? A. That doesn't make any difference.

Q. You mean to be understood as testifying here today that you can state that that information set forth on Exhibit L-1 was written in April of 1924? A. No, I can't say that.

Q. You say it was previous to April of 1924? A. I never keep a book over a year, as I already testified, and the exact date of that part, I am telling you, all that what I have written in there, I can not exactly tell the date. I couldn't tell that to save my soul. I can't remember that long ago.

Q. It may have been 1923, 1924 or 1922? A. It was in the period of a year when that book was written.

Q. Either prior to or subsequent to April, 1924? A. It was within the lapse of a year.

Q. A year either way? A. Either way.

(310) Q. Oh, either way. All right. A. I can't testify exactly right to the date when that was written.

Mr. Spohn: If your Honor please, may we have a ten-minute recess?

The Master: All right.

Mr. Spohn: And I ask this witness still be segregated from the other witnesses.

The Master: He can remain in this room, then. We will recess.

(A short recess was taken.)

Mr. Spohn: That is all, Mr. Libby.

Now, if your Honor please, I renew my objection to the offer.

The Master: Well, this document is not, of course, the primary record kept by the Ford Motor Company

of the time it takes to perform these operations, and it is not a direct study by the witness himself, because the witness testified that he was not, or did not make any time studies, and could not make them, and it is merely a copy, but I think it is sufficiently proved it was made at the time of existing time studies. It is in the nature of secondary evidence.

The only question in my mind is as to whether sufficient foundation has been laid for the introduction of this by showing that the primary records are legitimately not available.

Do you have any argument to make on that?

Mr. Farley: Yes, there is another point in connection with it. This is a record made at the time by a man familiar with the operations.

* * * * *

(311) RE-DIRECT EXAMINATION by Mr. Farley.

Q. Mr. Libby, will you refer to your notebook again, and I call your attention particularly to the operation 12, "shape cams," and for which in the right-hand column of the book you have the notation 1.20. What does that notation 1.20 mean? A. That is the time it takes.

Q. That represents then— A. (Interrupting): That operation. That is the time it takes to do that particular operation.

Q. That represents one and twenty one-hundredths of a minute, is that correct? A. That is right.

Q. And what is that, is that man-hour time for the job or machine-hour time? A. Well, by that I don't understand, but I will explain to you what I mean. That means the man takes the part and puts it in the machine and out, and that is the operation you charge the time of one minute and twenty one-hundredths.

Q. To each shaft for the time of a man on each shaft, is that the idea? **(312)** A. That is right.

Q. How many shapers would the men operate at that time? A. Shapers?

Q. Yes. A. Two.

Q. One man operated two shapers? A. One man operated two.

Q. Now, was it any part of your job to check and see whether the men were producing production, getting out

production in accordance with the time schedule as given in that notebook of yours? A. Well, here is the way we did that. I don't know how the time study do their job. That is a different thing, but what we do, we have a department, and we will say about 6 foremen in the department.

Well, as soon as one foreman got ten operations, another foreman got ten operations, and we add those operations up at the end of a day, and the time sheet will show so many men on that particular job.

Then we go to work and add these men up and the hours up and how much production we got out on that particular part, and figure the cost of each unit on a job, and the whole department is figured in after by the timekeeper.

Q. Do you use the operation sheets to check on that production? A. No, not that way.

Q. Well, now, what is your personal recollection concerning the output from the shapers and the shafts that you expected to get from an operator for each shift? A. How many shafts one man produces on 2 machines, is that what (313) you mean?

Q. That is on the regular shift. A. Around 450 to 480.

Q. Now, let me ask you this: During your period of time in the cam shaft department, as foreman of that department, from 1918 on and during the time the department was using the shapers, did you, or were there any changes in that operation of rough machining the cams that would require any new time study to be made for that particular operation, so far as you can remember? Do you understand what I mean? A. No.

Mr. Farley: Read the question.

(Question read by the reporter.)

A. There was other machines came in there.

Q. I am speaking now, the question is limited to the time when you were using the shapers, just during the shaper operation. A. The shapers is all we had to do it with right there and then.

Q. Was it required at any time, to your knowledge, to have any new time studies made on the shaper operation? A. I don't remember of any, Mr. Farley.

Q. Now, if you take the time given for that particular operation 1.20 and divide that into 60 minutes, how many —what would that give you as the output per man? A. 1.20. That would give you 50 an hour.

Q. How does that jibe with your recollection as to the output that you got from those machines? A. How does that what?

Q. How does that check up with your own personal recollection of the output? If you got 50 per hour, how many would you get **(314)** from the machine per man per day? A. That would be 400.

Q. And your recollection is you got slightly more. You testified you got more. A. Yes, we did.

Q. Now, just one more question. The counsel for plaintiff pressed you very hard to have you state that this particular record of yours was made at some other time than the date you testified. What is your best recollection, without pinning it down to any special day, as to the year when you believe you made this notation?

Mr. Spohn: If your Honor please, I submit that question has been answered by the witness.

Mr. Farley: Yes, he already has answered it.

The Master: I will overrule the objection.

A. The exact date I couldn't honestly say, because it was in a period of around a year either way. I can't exactly tell what date it was. I can't tell that.

Q. What would be your best judgment, was it made in 1923, 1924, or 1925?

Mr. Spohn: If your Honor please, I submit that counsel is cross examining his own witness. This is on re-direct examination and the witness testified with respect to the possibility of dates.

The Master: Well, he started in and asked a general question in the first place and a further specific question and then there was the cross examination, and I think counsel is entitled to go into it more specifically on re-direct. I will **(315)** overrule the objection.

A. I am positive it was not made in 1925. I am positive of that. I am positive only it was not made in 1925.

Q. How about either of the other years? What would you say as to 1923 or 1924? A. It must have been made in

1923 or 1924, in the period of a year there. I know it was not made in 1925, I know that.

Mr. Farley: That is all.

Now, with respect to the objection, if your Honor please—

Mr. Spohn: Just a few more questions on cross examination.

Re-Cross Examination by Mr. Spohn.

Q. Now, you stated to me that it might have been a year either way, you didn't know. A. I didn't know.

Q. And now you state you know positively it was not in 1925. A. I do know positively, and another thing, I went to the Rouge in 1925 and that book was made at Highland Park. We never had a book of that kind delivered to us at the Rouge plant.

Q. When you said it was a year either way, what did you mean? A. 1923 or 1924. It was possibly made in early 1923 or late 1924, but not 1925, sir.

Q. The only date that you have to fix that on is when you went to the Rouge plant in 1925? A. I went to the Rouge plant some date in September, 1924. The exact date I can't tell.

Q. What were your duties in the Rouge plant? A. When I went to the Rouge plant?

(316) Q. Yes. A. Well, I had the wrist pin, part of the camshaft and push-rod job.

Q. What part of the camshaft work did you have in the Rouge plant? A. Well, I had the hard end or the push-rod job. I can't remember the part number of that, 419, if I remember that, and the wrist pin job. I was not there very long. My wife was taken sick and I went back to Highland Park.

Q. You went back to Highland Park? A. That is when my wife was taken sick.

Q. When you say at the end of the day you figured up time records and production records and so forth, that record was not made in connection with the time sheet? A. It couldn't be here, because the first five operations I never saw in my life. That is the reason I am positive it was copied off a time study. I don't know what building they were made in.

Q. Did I understand you correctly when you said there was no change in shaper operations with respect to rough-turning while you were in that department that would require a new time study? A. Not that I know of, sir. I don't know of any operation change in there that would be required on this particular one.

Q. That would require a new time study? A. I don't know of any.

Q. Were there any other operation changes in that department while you were in it which would require a different time study, any other operations? A. Not that I know of.

Q. Not that you know of. **(317)** A. Not that I know of. I don't remember of any.

Q. In the operations with respect to that camshaft from the time you were there in 1918 until you left in 1924, they were just about the same? A. The operations were just about the same.

Q. Wouldn't require any new time study at all? A. That would be up to the time study department. That wouldn't be up to us, unless we made a radical change. If we improved our job and cut the cost we would have to report it to the time study department and they would make a check, but I don't remember anything of that kind being done.

Q. If it had happened you would probably remember? A. Yes, I would remember if there was anything that was of any great importance.

Q. You would remember that? A. Yes.

Q. You can't recall of any? A. I can't recall of any on that particular job.

The Master: You state the time study department made time studies at regular intervals whether there was a radical change or not?

A. Yes, sir; they do that. They come down and make a time study if they have got an idea there is some confliction in the cost, I suppose, they come in sometimes and time your job, take a time study, that you don't even call them in on.

If you will notice on the bottom of each operation sheet there it says that any change in operation must immedi-

ately be reported to the time study department. You see that on the bottom of the operation sheet.

(318) Mr. Spohn: I guess that is all, if your Honor please.

Mr. Farley: Do you want to hear me on the objection?

The Master: Yes.

Mr. Farley: That is all I have of the witness.

Mr. Spohn: That is all for the witness.

The Master: Is this exhibit being introduced not only to show the operations, but also as evidence of the time it took?

Mr. Farley: Yes, your Honor, introduced as evidence of the time the operation took, as a record made by this particular witness who was familiar with the facts at the time the facts occurred, made in his own handwriting, and also as secondary evidence, and we will produce the witnesses later to explain the practice of the Ford Company with respect to the destruction of these time studies, and we will show the original time study from which the man made this particular copy is no longer in existence and not available. It is not secondary evidence. The witness testified he positively made it from a time study that was in existence at that time. I think under all the facts it is clearly admissible.

Mr. Spohn: If your Honor please, may I defer my argument on that until we hear the witnesses?

The Master: I think for some purposes, without having the other witness' testimony, that this document will be admissible.

The witness has testified that he is thoroughly familiar with the operation, and that this record is an accurate record of the operations at the time.

I think on his testimony alone, without the other testimony, **(319)** it would be admissible for that purpose, but when it comes to the actual times that are set forth there, this witness has never clocked or timed the various operations, and for that purpose it is only secondary evidence.

On that question I think I will have to withhold my ruling until you show the primary evidence is not available.

I think you can go ahead and question the rest of the witnesses, however, just as though it were admitted into evidence, and I will withhold a ruling until such time as the further proof is submitted.

Mr. Farley: That is all, Mr. Libby.

Mr. Spohn: With respect to your ruling I want to point this out.

One of the basic reasons of the objection to the exhibit, even for the limited purpose for which your Honor received it, was it has no definitely fixed time.

In other words, the witness' testimony was he copied it from a time record. He doesn't know when that time study was made. So far as this record shows, that time study may have been made in 1918.

Mr. Farley: I don't think it makes any difference when it was made. It is a record of the operation of those shapers.

The Master: It was a time study which was in use in the department some time in 1923 or 1924. I think that the witness' recollection is sufficiently good on that point to assume that that is the truth, that he did copy it, the time study, during one of those years.

The original time study may have been made in 1918, and (320) under his testimony possibly not revised since then, but if it was not revised, it would appear from the system employed that it was not revised because there was no radical change necessitating a revision.

I am inclined to think that your objection as made has something to do with the weight to be attached to the evidence, but I think the document is admissible, and I will admit it, except for the purpose of or except as evidence of the actual time of the various operations. I don't think it is yet admissible for that purpose.

Mr. Farley: All right. Now I will have Mr. Shawkey resume the stand.

Morris E. Shawkey was thereupon recalled as a witness on behalf of the Defendant, and having been previously duly sworn, testified as follows:

Direct Examination by Mr. Farley (Continued).

Q. Mr. Shawkey, when you were asked to retire from the stand I think we were discussing this Libby notebook and what you did with the notebook after you got it from Mr. Libby. Will you resume from that point? I think it is all right, unless you want the reporter to read back to you what you were saying. A. No, I recall I was saying I had taken the book with me to Mr. Klopsic and let him look over it, and we thought it would be a good idea to immediately have photostats made of it.

Q. What else was done with it? Were there any other copies made in addition to the photostats, if you know? **(321)** A. Not that I know of. Yes, Mr. Klopsic copies off—he had the typist type an operation sheet or time study form from this book.

Q. And then did Mr. Klopsic turn over to you the book and operation sheet which he had typed? A. Yes, he did.

Q. I show you an exhibit which is marked for identification Exhibit M here, and ask you whether or not that is the sheet that Mr. Klopsic turned over to you? A. That appears to be the same, yes.

Q. After you received that sheet, Exhibit M, did you check it with the note book and the times given at any time? A. I was looking at this. I don't believe I got the wording of the question.

Q. I say, after you received the sheet Exhibit M, did you check that sheet then with the information as contained in the Libby notebook? A. Yes. We run over the figures to see that they corresponded.

Q. You made a check with Mr. Klopsic on that? A. Yes.

* * * * *

(322) Q. Did you make any searches through the files of the superintendent's office, or any other place, particularly for time studies and operation sheets? A. Yes, I did.

Q. And did you locate any other ones? A. I located a time study sheet in the superintendent's office.

Q. Are you familiar with the practice of the company concerning operation sheets in the work that you were doing in the cam shaft department? Was it any part of your duties to refer to time study operation sheets? A. Yes, quite often, to make me familiar with the times of the various operations, and the way—I am at a loss to express myself,—the following of operations, if I make myself clear, how they were arranged, one operation after the other.

Q. That is, as I understand your testimony, you men in a position of foremen, more or less in authority there, regularly use the time studies as a part of your regular duties in order to be thoroughly familiar with the sequence of operations? A. Yes.

Q. And also the time which is supposed to be consumed in the various operations? A. Yes.

(323) Q. I show you an exhibit marked Exhibit N, and ask you if you can state what that is? You were speaking about the fact that you found an operation sheet. Is that the operation sheet you procured? A. That seems to be the operation sheet that I found in Mr. Smith's office.

Q. And who is Mr. Smith, please? A. The building superintendent.

Q. Of what building? A. The motor building.

Q. And is that the building in which the Department 410 camshaft department is located? A. It is.

Q. And from whom did you procure that particular sheet? A. I went through the file myself. I don't know if all the papers were in there, and I found this sheet among those papers. There were several sheets that had reference to various things in the camshaft department that were in a file 410, and this was among the papers.

Q. Let me ask you, Mr. Shawkey, was there in the superintendent's office a regular file of operation sheets or time study operation sheets, a current file for the work then in process or then being used? A. I couldn't say to that, because I asked the superintendent's clerk if he had in his files any old files for past periods, and I don't know. I didn't go through all his drawers. He pulled this one out with a lot of other old information there.

(324) Q. Miscellaneous papers? A. Miscellaneous papers, and this was found among those.

The Master: Did you yourself go through all those miscellaneous papers?

A. Yes.

Q. And that was the only operation sheet you could find in those miscellaneous papers? A. Yes.

Mr. Farley: I offer this in evidence as Exhibit N as a paper found by this witness in the regular files or records of the Ford Motor Company and produced by him from those records.

* * * * *

(The hearing was resumed pursuant to recess.)

(Parties present the same as before.)

(335) The Master: You finished your direct examination?

Mr. Farley: Yes. I would like to offer in evidence this Exhibit M, which is the re-typing of the material on the Libby notebook, which was done for convenience in attaching it to our statement of account, and about which the witness just testified.

Mr. Spohn: If your Honor please, in respect to the offer, if it is to be received at all, I move that the date of April, 1924, be stricken from the offer on both sheets. The testimony is clear as to the day of its date, so far as the recollection of the witness is concerned.

The Master: I think from the testimony it is not known whether it was in April, 1924. You might change this to 1923 or 1924.

Mr. Spohn: If that is done then I ask the month of April be stricken off.

Mr. Farley: No objection so far as I am concerned.

The Master: It doesn't indicate on its face—yes, it does, too—it indicates that it is a copy of the Libby notebook. I will just cross out 1924. Have you compared it with the original exhibit?

Mr. Spohn: May I have a minute to do that, your Honor? **(336)** If your Honor please, I don't see on the bottom of the exhibit—Mr. Farley, am I wrong in this?

Mr. Farley: No, there are some additional things.

Mr. Spohn: Weights, and so forth.

Mr. Farley: That have been put in here that I will examine Mr. Klopsic about.

Mr. Spohn: If we may stipulate that the weights appearing, rough weight 5.865 pounds, finish weight 3.2050 pounds, and the next words, "forging steel," are not in the original Exhibit L and subject to further proof by counsel, then I won't have to move to strike it out.

Mr. Farley: So far as I am concerned this may be stricken, because I don't think it has any relevancy.

Mr. Spohn: Then I move it be stricken.

Mr. Farley: To any of the proceedings here. I think it will save time, if instead of examining the witness on it.

Mr. Spohn: As I understood the tendered offer of Exhibit L was admitted not as evidence of a minute consumption as set forth therein, am I right on that?

The Master: That is correct. Exhibit M will be admitted as simply a copy of Exhibit L and admitted subject to the same limitations.

Mr. Spohn: And received for the same purpose as Exhibit L was?

The Master: That is right.

Mr. Spohn: I want to offer the same objection to the reception of Exhibit M as Exhibit L.

* * * * *

---

(337) Mike Klopsic was thereupon called as a witness on behalf of the Defendant, and having been first duly sworn, testified as follows:

Direct Examination by Mr. Farley.

Q. State your name, please. A. Mike Klopsic, K-l-o-p-s-i-c.

Q. And where do you live, Mr. Klopsic? A. 1450 West Grixdale Avenue, Detroit.

Q. You are employed by the Ford Motor Company, Mr. Klopsic? A. Yes, sir.

Q. And what are the nature of your duties at the Ford Motor Company? A. Foreman of the time study department.

Q. How long have you had that particular position? A. Somewheres since 1928. I will not be able to recall the month. Anyway, it was at the beginning of Model A. That will give you the date. I don't recall just when.

Q. Model A was shown to the general public, the first showing of Model A was December, 1927? A. It was at the beginning of 1928. It was in the month of March. I am not going to say which year it was.

Q. If it was the beginning of Model A that would make it 1928. How long have you been employed by the Ford Company, Mr. Klopsic? **(338)** A. Since November 11, 1913.

Q. Now, how many men do you have working under you at the present time, Mr. Klopsic? A. You mean only at the Rouge plant?

Q. Well, generally. It doesn't make much difference. I thought I would let you give in general the extent of your employment. A. Somewhere around 90.

Q. Of that number, how many are at the Rouge plant? A. At the Rouge plant there are 25 or 24.

Q. As a part of your duties do you supervise time studies, not only at the Rouge plant, but all the various branch plants of the Ford Motor Company? A. Yes, sir; both in this country and in Europe.

Q. Now, will you explain to his Honor the general system used in your department and at the Ford Motor Company in the making of time studies? A. We use the decimal timer, double action.

The purpose that we use only this watch is because it has two large hands. When we start an operation and it continues, if for any reason there is avoidable delay, we press on this and we stop one hand. Then we count, take into consideration only between this hand and this hand, which gives us the amount of lost motion.

Q. Then when the lost motion ceases, you press the other button? A. Release it again when the lost motion is started, then we release it. One gets accustomed to it.

Q. Now, when a time study is made by your department, Mr. Klopsic, do you time—state just how you make that sort of a time study. Let us assume, we will say for the purpose here we **(339)** are concerned only with the cam

shafts, manufacture of cam shafts. Are you familiar with the cam shaft department? A. I am in a general way. I don't myself at the present time make time studies but I check them to see that they are fairly balancing with the actual time paid by the company.

Q. I think for the purpose of making your test perhaps more readily understandable, I will show you an exhibit which is marked Exhibit 7, and attached to Defendant's first statement of account which has been introduced in evidence as Exhibit A, or marked Exhibit A, and I will ask you just what this Exhibit 7, which is entitled "Operation Sheet" is, by name cam shaft symbol A-6250. It has at the bottom of the sheet, "Revised 7-1-31 by M. K." Who is M. K.? A. That is me.

Q. Now, did you make that particular time study to which your initials are attached, or was that made by somebody under your supervision? A. By one of the men working under me and on his original would be found his initials, if that could be procurable.

Q. Now, will you explain in general about that type of time study and just how they are made? A. This time study, or any time study under my supervision must be studied.

We have a ruling that it must be studied a sufficient length of time, the sequence of the complete operation, until the observer will find delays, if any, and so record them with the foreman.

That varies. Shall we say an operation that will require **(340)** 2/10 of a minute, it would be studied generally at least 10 minutes.

Under no consideration a time study man is to put down the figures with less than 20 minutes study, when operations are requiring say four or more minutes, because we believe it is not possible for the eye to find lost motion, and the accuracy would be more questionable on the end of the month when the total hours charged to that part number and the total time study, then the study would be then out of balance, if we did not time study long enough.

Q. When you make those time studies are they all made with a stop-watch? A. Yes, sir.

Q. Now, as I understand your testimony, your instructions are that the man must time the operation over a sufficient number of pieces so that he gets a fair record by

use of the time study and the use of the stop-watch? A. Yes.

Q. Now, with respect to that particular time study which you have before you, I call your attention to operation 14 made on July 1, 1931, and can you state whether or not you know what machine or what operation that is, and what machine that operation was performed on? A. No, I can not state on what machine that was performed on, due to the fact that I myself did not make the time study.

Q. Is that, however, a record from your department and a record made under your supervision? A. Yes, sir.

The Master: What is the purpose for which you make these **(341)** time studies?

A. There are two purposes. For cost accounting and for elimination of lost motion.

The Master: If one of your men is making a time study and he discovers for a particular operation there is considerable unnecessary delay, so that we will say the operation should be capable of being performed in half a minute, when actually it is being performed in one minute on the average, which of the two times would be set down on the time study as being the time for the operation?

A. Always the one, the reliable one which is at that time performed, and not the future one, what it should be. When it is necessary to make a new time study, which in the case your Honor specifies we would make a new time study after the operation has been corrected.

Q. When you make a time study, Mr. Klopsic, or referring to this particular one Exhibit 7, and I call your attention to the column under the heading "Minutes," just what does the minutes necessary for this operation 14, .7143, what does that indicate, machine time or man time? A. Combined time, handling and machine time.

Q. But the record .7143 is the record of the man, the entire time on the man to produce one piece, is that correct? A. That is correct.

Q. Now, do you know what the purpose of making those time operation sheets is for? For what purpose are they made? A. They are used in the accounting department for cost purposes and on a yearly inventory, for the inventory in process, pricing.

(342) Q. Are they also used in any way by the foremen of the various departments? A. They are.

Q. For what purpose, if you know? A. I do.

Q. Thank you. A. For the purpose of keeping within the cost specified in the time study. Each foreman will first see the time study before he will O.K. it as all right, or it will not come to my desk.

Q. Now, as the time given, and we will restrict the answer to this particular operation 14, .7143, does that represent actual time as shown by your stop-watch, or is there any allowance computed in that particular? A. There is always an allowance added. That is according to the fatigue of a human body.

For example, a man working on cylinder blocks, if he were to lift cylinder blocks all day, he can not perform, he would get tired, and an allowance must be made.

An allowance must also be made for personal duties, and it must also be made—allowing the distance from his place of work to that of lavatories and so forth. That allowance must be made. It varies.

In some departments where the work is lighter, we will probably allow 14¼ per cent, that is, to the entire figure arrived at by the observer, and not only on the machine time and man time, but combined time.

Q. What is your usual, more or less standard allowance? A. Well, I believe that we would come nearer 20 per cent on an **(343)** average, than we would to any other figure.

Q. And in making this allowance is there any consideration given by your department to such things as the necessity for changing tools in machines, and machine trouble, and that sort of thing? A. Yes, sir.

Q. And in connection with an operation which involves the use of a machine, and not merely a purely manual operation where no machine is involved, what is your ordinary allowance there? Would it be the 14 per cent or the 20 per cent? A. Where no machine is used?

Q. Where a machine is used as distinguished from one where it is a purely manual operation. A. It would be 20 per cent.

Q. Then can you state whether or not an allowance of 20 per cent is included in this figure of .7143 on the opera-

tion sheet Exhibit 7 for the A-6250 shaft? A. Yes, I believe it was.

The Master: Do you know whether it was 20 per cent or 15 or 25, or do you simply mean there was an allowance made?

A. There was an allowance made, whether 20 per cent or 25 per cent, I have no means now of checking back, but that it was not less than 14¼ per cent, I am sure.

Q. Do you know what particular individual in your department made the time study from which this sheet was made? Does this initial G. Z. throw any light on that, or is that the name of the typist?

The Master: Can you tell generally whether that would **(344)** be the name of the man who made the time study, or the typist?

A. Generally it is the man, but I could not say G. Z. is. I am afraid that is the typist's initial, because I am not familiar with the name, of ever having had any time study man with the last letter "Z."

Q. In 1931, were you making time studies yourself, in July of 1931? A. I made some time studies.

Q. Would the fact that your initials M. K. appear on there, would that indicate you yourself might have made that one, or did make that one? What is your practice in that respect? Do you put on the time study the initial of the man who made the time study, or are all time studies that are made in your department,—do they contain your initial? A. They all contain my initial, but also the initial of the man that made the time study.

Just when that was started, these sheets do not provide that space, but now we have the same form number that does provide space for the initials of the observer.

I might have myself made that time study. I might have made it myself.

The Master: Where did you get this 14¼ per cent figure from? You are getting down to fine points of accuracy when you split percentages.

A. 14¼ per cent. In other words, of 480 minutes is about ⅛, allowing for personal duties, just about ⅛, I believe, 14¼ per cent of 480 minutes. That is 68.4 minutes.

The Master: I was just interested in knowing how you **(345)** arrived at the figure 14¼ per cent as being the minimum allowance for non-productive time.

A. That is not accurate at all. The working man's cycle will go somewhat like this:

First hour, second hour, third hour, fourth hour, fifth hour, and so on, will rise from the morning work, continue on quite an even scale until about the sixth hour, seventh hour. Whether he wants to or not, a working man has a very hard time to produce as much as he did at the fifth hour.

In the third, fourth, fifth, sixth hour he will produce, if conditions permit, more than he will in the first or last hour.

That is generally applied, I believe, by all time study departments.

Q. And do you find that to be true as a result of your own observations? A. Yes, sir.

Q. How long have you been doing this time study work, Mr. Klopsic? A. Since 1928, about 10½ years.

Q. Now, when the time study, such as this Exhibit 7, is produced, it is submitted to you, you say, or rather, it is submitted to the foreman before you get it. What, if anything, do you do towards checking the correctness of that time study before letting it become official? Let me ask you this first: I assume that before these time studies are put into practice there that they must be approved by you, is that correct? A. By me or my assistant. I have an assistant.

Q. And who is that assistant? A. His name is Frank Dorsey.

(346) Q. Now, what, if anything, do you do towards checking the correctness of that time study before you permit it to issue from your department? A. If it is away from actual conditions it does show, when variation appears greater than warranted, but the reason of time study, perhaps the reason the time study was made first, was because operations changed, either the sequence of operation or some improvement has been made, and if the variation of time varies too much to be safe, we re-check it.

We send a man back to check it again to be sure that we will be within balancing time of the time department, which is under another departmental head.

Q. Now, when you say because of a change of an operation or because of an improvement, just what do you mean by improvement there? Do you mean improvement in the product, some change in the construction of principle, or do you mean improvement in the machines or methods, or do you mean both? A. I mean both; that if an operation is combined with another, or eliminated, although the design may remain the same, the cost is affected which demands that I make a new time study.

Q. From time to time changes are made in the various parts by the engineering department, and the engineering department informations issue? A. Yes.

Q. To make some change in the construction of a part, and even if it were only as to one portion of the part, that is one thing that would necessitate a new time study? A. I receive from Mr. Sheldrick every engineering change issued **(347)** by the Ford Motor Company. A copy is forwarded to me in order that I maintain a schedule of what to do.

Q. In order that his Honor may understand that system I hope I may do a little leading to shorten the thing up. At the Ford Motor Company they have an engineering design or department which devotes its entire time to changes in the construction of the car; that is Mr. Sheldrick's department, is that right? A. Right.

Q. And whenever a change is made in any part of the construction that is when an engineering information is issued that one is being made? A. Yes.

Q. And you say you get a copy of every one of these engineering informations? A. Yes, sir.

Q. And it is your duty to inspect those, and if you find any change has been made in any of the parts of the car, then it is your duty to send a time study man to check that operation, that is correct? A. It is my duty to give each time study man—they are assigned to certain buildings, and I give those parts that are manufactured in that building, I give these engineering informations to the time study man. It would not be sometimes quite possible for me to read them all.

Q. Then what does that man do after he gets the engineering information from you? A. He first checks whether it is a material change, like forging **(348)** or casting, whether it is to be purchased on the outside or to be manu-

factured. At times changes occur that we buy parts on the outside, and we make parts sometimes at the factory.

Then he would change, if an operation change is needed, and he will go to the department manufacturing that part and make a new time study.

Q. And check with the foreman of the department? A. Yes, sir.

Q. Very well. Now, supposing you get new machinery into one of the departments to perform an operation that was formerly performed by another machine, how is that sort of thing brought to your attention? A. On machinery purchased by Mr. Kellogg's department, when an installation order is issued, I receive a copy of that order.

Q. And after you receive a copy of an order showing the installation of a new machine, what is then done? A. Immediately the machine is installed. If it is a new machine, that it will change the times, we will make a new time study, but if it will not change the actual time required to perform the operation, then we may not change it.

Q. In other words, if a new machine is purchased and is of a different type from the machines that had heretofore been used in the department, you would make a time study? A. Yes, sir.

Q. But if a machine coming in, a new machine coming in, was of the same type as already had been in use in the department, you might not make a time study of that one? **(349)** A. I might not make a time study if the machine is simply added because of larger production may be required.

Q. Now, after these time studies are prepared and checked and approved by you and you are satisfied that they are accurate, what then is done with them? A. One copy goes to the accounting department, one copy goes to the foreman, general foreman in the department, and then they are all for foreign branches. They are mailed, such as Walkerville, Degenham and Germany and France, wherever they manufacture.

Q. Degenham is the English plant of the Ford Company? A. Yes, sir.

Q. When you prepare a new time study what happens to the former time studies that you have prepared, or let us say between the period when you started in the department until quite recently what was the practice? A. Until quite recently the old sheet was always destroyed

when a revised sheet was issued, because of the tremendous filing space, and it was not deemed necessary, I presume, by the executive department, of which I would have no knowledge.

The Master: In connection with the answer to the previous question, did I understand where you make a time study you retain the original or copy in your own department, as well as sending them on to these other departments that you mentioned?

A. Yes, one copy, the original, is kept.

Q. And when you issue a new time study and send it to the foreman of the department and to the accounting department, is it the duty of your men to collect the old one and see that it is **(350)** destroyed? A. No, it is not.

Q. Whose duty is it, if anyone's, to destroy those old ones? A. The timekeeper of the department should, according to instructions, when he receives a new operation sheet, should pull out the old one and destroy it and insert in the same place the new one.

Q. Do you know the reason for that practice, in so far as the time study man of the department is concerned, of destroying the old one? A. No, I do not.

The Master: With respect to the copies that are sent to the accounting department, do you know whether those are destroyed, and if so, under what circumstances?

A. Until very recently they were destroyed after either obsoletion of a model or discontinuance, or when a new operation sheet was issued the old one was destroyed.

The Master: That was true of the accounting department as well as the copies sent to the foremen of the various departments?

A. Yes.

The Master: Whose duty was it in the accounting department to see that the former sheet was destroyed?

A. The cost clerks figuring those parts when receiving a new operation sheet they each had there on file, and we will say when they get one they simply pull the old one out and insert the new one.

The Master: Are there instructions on the sheets themselves **(351)** to that effect?

A. No, that was all done by, shall we say verbal request, or understanding? I don't know. I always understood it. Before I was a time study man I worked in the cost department myself figuring costs in money and I remember that that is what they did.

Q. That was the instruction you had when you were in the cost department, to destroy the old sheets as soon as you got the new ones? A. Yes, sir.

Q. Now, in so far as your own department is concerned, what orders have you there in that department in so far as destruction of the old sheets were concerned, when the new sheet was gotten out, or what was the practice there when the sheet was made? A. The practice was the same until recently, when we were instructed to file the old sheets. Until then we always destroyed obsolete operation sheets.

The Master: When you say recently, what date are you referring to?

A. I would say it is maybe a couple months ago.

Mr. Farley: I might say, if the Court please, there that in view of the experience I had in this case discovering records that orders were issued that there be a complete file kept in the future of all operation sheets prepared at the Ford Motor Company.

Q. (By Mr. Farley): Now, Mr. Klopsic, I would like you to first look at this Exhibit L, the notebook which has been introduced here, and ask you to examine it and state whether you have ever seen **(352)** that before? A. Yes, I have.

Q. Well, will you please state the circumstances under which you saw that notebook? A. Mr. Shawkey brought this to my desk. I will not say what date it was, but for the purpose of convenience I had an operation sheet copied off of this, just as it was written, using the same figures as they appear in this book, and that is all I did with the book.

Q. I show you the 2 sheets that were marked Exhibit M, and ask you if you know what that is, and if so, to state?

A. That is the sheet that I requested to be prepared. I felt that it was going to be for convenience. That was all.

Q. Prepared from what? A. From this book.

Q. And the data appearing on the operation sheet Exhibit M, is that precisely the same as contained in the notebook? A. Precisely the same. That was the sheet.

Mr. Farley: I think that this already has been offered.

The Master: Yes.

Mr. Farley: And it is received subject to the objection made against the notebook.

Mr. Spohn: I suppose it doesn't make any difference, but there is a total on this page that was not on the other, and without taking the time to add it up, I don't suppose the total is material.

Mr. Farley: No, I don't think so.

Mr. Spohn: I suggest the total be stricken. Otherwise we **(353)** have got to add it up and see if it is right.

The Master: Let us strike the total.

Mr. Spohn: It is not material, anyway.

Mr. Farley: That is quite right.

The Master: After these time studies are made, is there any attempt on the part of your department or any other department to check the production to see that it corresponds with the production which should be obtained according to the time studies, if you know?

A. Yes. Form 2002-B, I believe it is, on top of that form is inserted the latest time study, the best month, and naturally the actual minute cost of that time. Mr. Woehrle had the form like that here.

Q. Here is Form 2002-B, Exhibit H. That is the form you are referring to? A. Yes. You see they insert that time study. In here are inserted the shift hours. This would be shift No. 1, which would be from probably 11 o'clock at night to 7 in the morning. That would be from 7 to the afternoon shift, and that would be from afternoon to 11.

Then these hours are totaled and production inserted.

The minute cost is figured daily on the form. If it varies to a great extent, what he has here, it is immedi-

ately called to our attention. Of course, that will not give operation cost.

The Master: To make the record clear, you mean if there is a material variance from the time in the time study then it is called to your attention?

A. Yes.

(354) Q. (By Mr. Farley): If there is a material variance which persists between the total times as given by your time studies, what then happens? Do you re-check the job or does it run on without any further check? A. What happens to all of us who work at the Ford Motor Company in the time study department, we will know quite well when it does happen.

Q. Then what do you do, Mr. Klopsic, when that does happen? That might be called the first reaction, and after that first reaction, Mr. Klopsic, what then happens? Do you put your men back on checking? A. Either that observer will go to the job immediately, which most of the time is not rapid enough, and I have to go and do the work myself.

The Master: Are your time studies expected to give an accurate representation of the amount of time to do the job whether you are having low production or high production? Is there any effect of production on the accuracy of the time studies, as representing the actual production?

A. We make great attempts to be as near up to date as humanly possible, and we strive to always issue new sheets for parts that require lower production, which has a bearing on cost.

Shall we put it this way, your Honor: When a model changes and the obsolete model production is lowered, we must issue new sheets, new time sheets, because of the lowered production.

The Master: Even though the operations themselves are exactly the same?

A. Yes.

(355) The Master: Is there any general correlation between low production and the amount of time it takes to do the job? That is, can you state when the

production is low the time for the operations rise, or is less than when the production is heavy?

A. Only in handling, your Honor. The variation is only in handling, delivering to machine, because the flow is not constant like in full production.

The variable will be in handling the stock.

Machine time will not change materially, unless an operator, for example, will run three machines during high production, and two or one and part time one. That will have a bearing then on what he can produce.

Q. When you say two or one or part one, you mean on low production? A. On low production.

Q. Yes. Now, do you know, Mr. Klopsic, did the Ford Company have a time study department at the Highland Park plant? A. Yes, there were two men working, Mr. Bennett and Mr. Marentette.

Q. At the Highland Park plant? A. At the Highland Park plant.

Q. Since you took charge of the time study department in 1928 where has most of your work, in so far as the Ford Motor Company here in Dearborn or in River Rouge, or wherever you want to call it, has most of your work been in what we call the Rouge plant or Highland Park plant? A. Most of my work in time study has been in the Rouge plant.

Q. Before you started your time study department in the early part **(356)** of 1928, do you know whether or not there was any time study department at the Rouge plant? A. There was not.

The Master: Do you have a separate department called the time department?

A. The time department is a separate department, yes, sir.

The Master: What is the function of that department, just to keep a record of actual time spent by the workman?

A. The foreman in charge of that department is the boss of all time clerks, keeping the Form 2002-B, extending the clock cards, balancing the time from daily foremen's time reports.

* * * * *

(373) The Master: What kind of checks have you made on the accuracy of your time studies, generally? Have you ever, for example, had two or three different men make time studies of the same series of operations unknown to each other and to check up their results?

A. Well, that is done only periodically. You change men around. That is done periodically, say every three months. A man that now works in one building in approximately three months will be assigned to another building, and the other man from the other building will come to his building.

The Master: When they are shifted around the man who is shifted doesn't immediately make new time studies of all the operations in the departments that he is now assigned to, does he? He simply waits until some occasion arises for a new time study to be made, the same as the old man did?

A. Oh, yes.

The Master: Have you ever made any experiments to see how closely two different men in your department would come in their time studies on the same series of operations, at the same general time?

A. It is not deemed necessary, because we use Form 2002-B to state and show the facts, how much, how many hours or minutes Ford Motor Company has paid in wages to workers to produce that, and if our time study is out of balance on that, as stated before, I would very quickly be informed that something is wrong.

(374) The Master: When one of your men is making a time study, might not the man observed speed up during the particular period in which the time study is being made, and consequently go through a series of operations in much less time than he ordinarily would?

A. We time study in the plant approximately six hours a day.

The department starts at 8 o'clock, while production starts much earlier than that, and the time study men come into the office to make their computations of the last

hour or hour and a half, so that the most time for observation is generally between 8:30 to 3 or 3:30, which is, we believe, the best time to study under most productive and efficient hours.

Mr. Farley: You haven't really answered his Honor's question. What he was asking was, don't you find that when one of the operatives on the machine sees one of your time study men holding a stop watch on him, doesn't he slow up so that he won't get too much time, so that he won't have to work too hard?

The Master: Or speed up.

Mr. Farley: How do you prevent that from happening?

A. Pardon me. I did not understand the question. That we are not, because we are not paying piece work and the men do not fear the time study men like they do where a piece rate is paid, and to my knowledge no complaints have been registered that I know of that any operation has been excessively sped up.

Mr. Farley: Or slowed down?

A. Or slowed down.

Mr. Farley: Suppose you had any reason to expect that the (375) operator was trying to, let us say, put one over on the time study man, would you let it go at that, or do you go back and check, or how do you handle that situation. Surely that must have arisen.

Mr. Spohn: I understand the witness has said there has been no complaints of any operation sped up or slowed down.

Mr. Farley: It seems incredible to me.

Mr. Spohn: I admit it, but if that is the witness' understanding of the situation, all right.

A. Now, no complaints that I know of, if you mean to my department by men, because we don't time study one man if there should be, say, 15 men performing the same operation. In our time study it must be included; all 15 men must be checked.

The Master: You don't pick out one operator and base a time study on that?

A. We do not carry around at the Ford Company so-called speed experts or professional operators for time

study purposes. The man that performs the operation is the man to be time studied, and not unbeknown to him.

The Master: Here with this particular study you have just a single man performing the operation. At the time this department was on Model A cams or Model A cams were being produced in the department, there were quite a number of machines and a number of men running them, under ordinary conditions of production?

A. Yes, sir.

The Master: In view of that fact would you consider that this time study made of the operations of one man is reliable?

(376) A. The man who operated that machine, I would say is reliable, because he operated machines, so I was told, but he operated the machine quite efficiently.

The Master: When you take a time study, I presume you have done it yourself, you have taken time studies where you have had as many as, say, 10 or 15 men operating the same machine during the day, and clocked the different men. What do you ordinarily find with respect to variations in the time of operations of the time taken by the various men to perform the operations?

A. Oh, that is sometimes quite a variation.

The Master: What do you do in a case like that when you find variations? Do you take the average?

A. Average of all men.

The Master: Now, if you averaged 15 men, then, for example, in the camshaft department during the period when the Model A camshaft was being produced, in operating the Melling cam lathes, and if Pillinger was one of the men operating at the time, a time study of his operations might have shown considerably different results from a time study of anyone of the other 15 men?

A. Yes.

The Master: How much difference? Would you say as to what the maximum variation would likely be? Would it be 20 percent, 50 percent?

A. No, it could not be more than 10 percent variation, I don't believe, in men. It could be, but it generally isn't.

* * * * *

---

(431) RALPH T. MYERS, a witness called on behalf of the Defendant, and having been first duly sworn, testified as follows:

DIRECT EXAMINATION by Mr. Farley.

Q. What is your name, sir? A. Ralph T. Myers.

Q. And where do you live, Mr. Myers? A. I am living at 10 Roosevelt Boulevard, Cohoes, New York. I just moved down there.

Q. You are employed by the Ford Motor Company, Mr. Myers? A. Yes, sir.

Q. In what capacity? A. I am foreman of the Green Island plant.

Q. The Green Island plant is where? A. Green Island, New York.

Q. That is near Albany? A. Seven miles from Albany.

Q. Is that an assembly plant of the Ford Motor Company? A. No, it is manufacturing.

Q. Manufacturing what? A. Manufacturing radiators, roller bearings and car springs.

Q. Now, before you were assigned to the Green Island plant of the defendant, the Ford Company, where were you? A. Why, I worked out of the superintendent's office in the motor building the last year.

Q. And before that? **(432)** A. Department 410, the camshaft department.

Q. You were general foreman of that department? A. Yes, sir.

Q. How long have you been employed by the Ford Company? A. I went there in 1913.

Q. Now, as general foreman of Department 410 you were familiar with the various operations performed in that department on the camshafts? A. Yes.

Q. And with the machining of the cams of the camshafts? A. Yes, at that time, after I went in there.

Q. What time did you go into that department as foreman? A. I think I went in there in June, 1929. It might have been 1928, but I know the month was June.

Q. At that time what type of shafts were they making in the department? A. Model A.

Q. You went there shortly after Model A production started? A. I believe they were making about 3,000 a day.

Q. When you first went in the department? A. When I went in the department.

Q. You remained as foreman of the department until 1936 or thereabouts? A. 1937, I think about October. I went out of there in 1937.

Q. Now, when you first went into the department what type of machines did you use in the department for the machining of the cams of the camshafts? A. Well, we had what they call the Melling lathes, or Walcott lathes.

(433) Q. Do you have a present recollection of the average production of those lathes in machining the Model A shafts? A. Well, approximately. I couldn't say right to the shaft.

Q. What did you count on getting? Was it part of your duties as foreman to know what you could expect per man in a general way per day? A. Yes, sir.

Q. On the various operations? A. Yes, sir.

Q. What did you count on getting per man in the operation of the Walcott lathe? A. Well, if I remember properly, I think a man run 2 lathes, and we used to figure,—we used to work for 500 in 8 hours.

The Master: Was that the top amount you were working for, or is that what you expected to get?

A. The job was good for that if you didn't have any tool trouble and that man worked eight hours. If you had tool trouble you would not get that many. We figured 50 an hour average working 8 hours in and out. We used to work 3 shifts. If you had a good shift, why, you got 30 or 35 an hour on that kind of machine. The time study would show somewhere near what we got. I am recalling the best I can.

Q. You spoke of the fact that machine trouble possibly might cut down production. Did you have any particular

amount of machine trouble with the Walcott lathe? A. Yes, we did. They caused a lot of trouble.

Q. And do you remember how many maintenance men you had to have in the department to keep those lathes up, or did they come **(434)** under your immediate supervision? A. That come under a different foreman. He handled the toolmakers of the building, but if I didn't get enough production it was up to me to holler for more men, and I know we had on the average of 4 or 5 mechanics on that one particular thing. Occasionally they would be put on a spare job here and there, but it kept them pretty busy on the cam lathes.

Q. Who was the foreman of the toolmakers? A. A man by the name of Pillinger. You mean the cam lathes or toolmakers?

Q. I was inquiring of the general foreman of the toolmakers. A. John Schmid. Pillinger was the man under him in that division.

Q. Who was in charge of repairs on the Walcott lathes? A. Yes.

The Master: What were the difficulties you were encountering on the Walcott lathes?

A. They had these overhead slides and the slides used to stick. That was one of the main troubles and it was a bad job on tools too, of course.

Q. You mean by that tools had to be replaced frequently? A. Yes.

* * * * *

(479) Q. Very well. Will you just go through the series of steps up to the machining of the cam? A. This is the rough forging, the way I receive it from the **(480)** forge shop.

Q. That is Exhibit 28, that is the way the cams came to you? A. Yes.

Q. What is the first operation done in your department? A. The first operation, I machine these ends to length.

Q. That smooths up the two ends? A. That is right. In a Davis-Thompson machine we milled them.

Q. Then what came next? A. We centered them.

Q. By centering you mean you put this little hole on? A. 60 degree included angle for centers of your lathe.

Q. And that centering is done in a centering machine, holes are drilled in there? A. Yes.

Q. What comes after the centering? A. Then we had a straightening job on the center bearing. After we centered that we located from the rough bearing itself and we centered that, and then from the center itself, this here naturally will run out, and we straighten that job down and naturally it pulls in the center line.

Q. That is to prepare the shaft for the next operation? A. Yes.

Q. Which is what? A. Rough turn the center bearing. At this point we can put no steady rest on that shaft yet. What we have between centers there, we use an air chuck on this.

Mr. Farley: I might state I am doing this so that it will help you to understand these operations, and I hope you will feel perfectly free to interrupt at any point if you have a **(481)** question yourself.

The Master: I didn't get this straightening operation straight.

A. Mill to length, the first operation we do, then we center both ends at once. That is the second operation. The third operation, the shaft is the same as this rough forging, only it is milled off and centered. Then we straighten between centers on a chuck press, and sometimes that is run out ⅛ of an inch, and pull that shaft down. We use a gauge, or a good man can use his eye.

Mr. Farley: The centers are put in for the purpose of mounting this in the lathe.

The Master: I understand.

Q. And it is rotated on the centers, and if after those centers are put in, have been located by these two ends, this part should be out of round or eccentric, then they put it in the press and straighten it? A. We center on these two bearings and pull these two bearings with this bearing, what we would clean up.

Q. Now you have got your rough turn center bearings. That is the operation you describe? A. Yes. Then the next operation, we turn between cams.

Q. Let us see if we can give those numbers as we go along. No. 1 was mill ends. 2 was center? A. Right.

Q. 3 was straighten? A. Right.

Q. 4, turn center bearing? **(482)** A. Yes.

Q. Now you are to 5. A. I am going to change that operation now. I am going to recess this shaft. We are going to recess this. That is where we have got the length of this bearing from our center out here and also the side of that cam. This happens to be a V-8 shaft. We won't take that into consideration. Now, let's see, we turn between cams before the recess, the recess before the cam. Either one way or the other.

Q. I don't think it makes any particular difference so far as the issues here are concerned. A. I am almost sure we recessed it first, but I might be wrong on that. We had a tool here and if that cam was out of location we got the side of that cam as well. With these ends tools you get your bearings to length.

Q. Then the recess would be 6? A. Either one or the other.

Q. The turns between cams would be 7, shall we say? A. That is right.

Q. Then what after that? A. Then we come down here and we turned, I think we turned the gear post.

Q. That would be 8? A. Maybe we come back and turned these two bearings off the center bearing. Now, whether we did that before the post end, that is not just clear to me. This is one operation, rough-turning this post and facing here and turn that O. D. there. We can turn that O. D. when we turned this flange. That takes the steady rest.

(483) Q. You are referring then to Exhibit 29. Now, what after what you just described? A. We have to get down further. Well, that is all right.

Q. What would be the next operation? A. Taking for granted that these are turned now. We had a short hole here. We call it a construction hole. The hole didn't mean anything to the job. We put that hole in there, locating from a certain cam. That gave us our cam, our rough ridge here before it went into the cam mill or Melling lathe, locating from that pin. That would put it in position to clean up properly.

Q. Then after drilling that hole, what was the next thing that you did? A. It went into the cam lathe.

Q. Did you perform any operation on it? A. Pardon? Yes. When we had the straightening job after this bottom cam and recess here, we had to straighten that.

Q. What was the purpose or function of that straightening operation? A. We used to go after these pretty rough and sprung this shaft out of line. We had a steady rest here and on the centers here and we would throw that shaft out 16 or ninety-thousandths and straighten that out to get the bottom cams running true to line it up properly for your cam mill or Melling lathes.

Q. Did that have anything to do with the operation as performed in the Melling lathe? Was it in any way necessary or unnecessary? A. You had to line this up or too many cams didn't clean up.

Q. After that operation of straightening was performed on those **(484)** shafts it is ready then for the turning operation? A. That is right.

Q. That was the A shaft? A. Yes.

Q. Was that practice followed all during your time as foreman? A. As far as I know, yes.

* * * * *

---

(487) VICTOR F. MARENTETTE, a witness called on behalf of the Defendant, and having been first duly sworn, testified as follows:

DIRECT EXAMINATION by Mr. Farley.

Q. Your name, please? A. Victor Marentette.

(488) Q. And where do you live, Mr. Marentette? A. 12731 Lauder.

Q. That is where? A. On the West Side.

Q. Detroit? A. Yes, sir.

Q. You are employed by the Ford Motor Company? A. Yes, sir.

Q. How long have you been employed by them, Mr. Marentette? A. 26 years.

Q. What are your present duties at the Ford Company? A. I am a lay-out man on floor space and so on in the time study department.

Q. You are in the time study department? A. Yes, sir.

Q. Under Mr. Klopsic? A. Yes, sir.

Q. How long have you been doing time study work at the Ford plant? A. Approximately 8 or 9 years.

Q. Did you ever do any time study work at the Highland Park plant of the Ford Company? A. Yes, sir.

Q. When did you start doing that work at the Highland Park plant? A. It must have been around 1916 to 1915.

Q. How long did you continue to do that work there? A. Until I was transferred to the Rouge plant, which I think was in 1925, 1924 or 1925.

Q. Now, in the time study work that you did at the Highland Park plant, did you make those time studies with the aid of a stop-watch **(489)** or not? A. Yes, sir.

Q. You used a stop-watch on all time studies? A. Yes, sir.

Q. Do you have any present recollection of having made any time study on the cam shafts? A. Yes, sir; I made the time studies running from the Series A until the last one I made up, which I believe nine changes were made, eight or nine changes were made on that cam shaft, and I was the one that made those changes.

Q. And I show you a certain original here that is marked Exhibit N, and ask you if you can tell what that is? A. Well, this was the change that I made in respect to the 12th and 13th operation.

Q. What is that? Is that a time study or what? A. It was time study, yes, sir.

Q. By whom was it made, do you know? A. By me.

Q. Now, I call your attention to the initials V. F. M. on the 2nd sheet of that, and ask you what is the meaning of those initials? A. That meant that we had to sign all operation sheets with our own initials.

Q. What do the initials V. F. M. stand for? A. Victor F. Marentette.

Q. That is yourself? A. Yes, sir.

Q. How about the time appearing on that? First let me ask you this: Did you make the time study Exhibit N? Was that made **(490)** by you personally? A. Yes, sir.

Q. Now, was that time study made by you with a stop-watch or was it merely by talking to the foreman, the operators and getting the times? A. That was made by a stop-watch.

Q. What was your practice in making time studies with a stop-watch? How long did you observe the job? A. I should judge approximately 2 hours at that time that I made this change in this straightening operation and the turning, turn cam on the lathe.

Q. Do you know anything about the type of machine that was used for turning the cam? A. That was the Walcott machine.

Q. What operation is that on your time study there? A. That is operation 13.

Q. Now, as to the date appearing, 10-8-24, did you have anything to do with the placing of that date on there? A. Yes, sir; any time we made a change on an operation sheet we put the date on, the day it was changed.

Q. That date was put on there by you 10-8-24, on the 8th day of October, 1924? A. Yes, sir.

Q. Now, what is the meaning of the inscription "Series I," or "1"? A. That is Series I. We started on the alphabet, A, to whatever change we had in the previous operation, whatever change we made, it is a transposition of the operation of whatever we made the change on. It is hard to tell. May be additional (491) operations, or probably minus an operation.

Q. I show you a notebook that was introduced in evidence here as Exhibit L, and will ask you if you ever seen that book? A. No, sir; I never seen that book.

Q. Now, will you refer to the pages that are marked L-1, and state whether or not you recognize that information contained there on those pages? A. The shape cams on operation 12 is the only thing I can see.

Q. Will you compare the various things stated here in these notes with your operation sheet Exhibit N? You might as you go along, Mr. Marentette, just read out those things? A. You want the operation read out? Cut to length, .12, .48.

Q. You find it is on both Exhibit N and sheets Exhibit L? A. Yes, sir. Straighten forge 1.24. He has got heat and forge, 1.24. Cold trim, .48. Air heat, 1.72. A snag at 2.22. Center both ends at .2. Rough-straighten, .8 and rough turn center bearing .666. Turn between cams, .75. Straddle face flange, .60. Rough turn gear box, .60. Drill letter L, .24. Rough turn end bearings, .60. Rough grind center bearing, .333 and straighten—I have

a straightening operation of .5 and they don't show a .5 here. It is a shape cams.

Q. What is operation straighten on your time sheet, Exhibit N, what is the number of that? A. No. 12.

Q. Now, as you were reading those and comparing those, do you find the same designation as far as letter or number of each operation is concerned on each? A. That is O.K., outside of this operation here.

Q. What operation number? **(492)** A. Operation 12.

Q. Operation 12 in Exhibit L is what? A. Exhibit L is shape cams .120.

Q. And operation 12? A. On my sheet is straighten. That was the added operation.

Q. And the time given for that is .5? A. .5.

Q. Now, are you familiar with those operations that are described on those two records? A. Yes, sir.

Q. Now, what is operation 12 on Exhibit L? You just read that it is shape cams. A. Shape cams.

Q. And operation 12? A. Here is straighten.

Q. How about operation 13? A. 13 was to turn cam lathe.

Q. That is on Exhibit N? A. On Exhibit N.

Q. And is there a corresponding operation in Exhibit L? A. Shape cams here.

Q. What is the time for it? A. I have .86 against 1.20.

Q. How do you remember what the operation is? Let me put it this way: What was the operation that is designated by "shape cams" on Exhibit L? What type of machine was that operation performed on, if you know? A. That was a shaper.

Q. And what machine was the operation performed on in No. 13 on **(493)** your Exhibit N? A. That was a Walcott machine.

Q. Walcott? A. Of the type of machine of Walcott grinder.

Q. Grinder or lathe? A. Walcott lathe.

Q. Now, referring to the first set of operations, A, B, C and D on these 2 sheets, in what department was that operation performed? A. That was in the forge shop, in the D department.

Q. And how about the operations numbered 1 and 2? A. They were heat-treating operations.

Q. What department was that in? A. 819.

Q. As to the remaining operations, what department were they in? A. They were in Department 410.

Q. All in Department 410? A. Yes, sir.

Q. Now, will you compare the remaining operations on these two sheets. First will you state how many, what is the total number of operations contained in Exhibit M which contains the same information that is contained in Exhibit L-1? A. You mean the remaining operations?

Q. First what are the total number of operations listed on Exhibit M? A. Exhibit N is 46.

Q. No, this is Exhibit M. A. Is that the one you wanted? Exhibit M was 45.

(494) Q. Now, so far as this Exhibit L-1 is concerned, how many operations were listed there? A. Exhibit L-1, 45. The same as this one.

Q. How about Exhibit N, how many operations? A. Exhibit N, we had 46, with the added operation of straightening.

Q. Will you briefly compare, and you might use for convenience Exhibit M, because it is easier to read, the remaining operations after operation 12, shape cams, on Exhibit N, and the remaining operations after 13, turn cam lathe, on Exhibit N. A. Comparing the 2 sheets, is it?

Q. Yes. A. The 14th operation on Exhibit N is cyanide and quench and the 13th on Exhibit M is cyanide. Naturally that would go up an operation, adding this one on Exhibit N of straightening. That would throw this operation sheet off.

Q. You mean changes the number of operations? A. Yes.

Q. Operation "cyanide" from 13 on this sheet to 14 on yours? A. Yes, sir.

Q. Without going over all of them, will you just check briefly the times? A. Do you want me to call them out?

Q. No. Now, can you state, Mr. Marentette, whether or not the record such as contained on this Exhibit M was prepared from a time study of yours? A. I wouldn't be a bit surprised but what it does.

Q. Exhibit M and Exhibit L? A. Yes, sir. Just a moment.

(495) Q. Is there anything on that that would enable you to identify it as a time study?

Mr. Spohn: Just a moment. What exhibits are you referring to?

Mr. Farley: Exhibits L and M.

Mr. Spohn: Both of them?

Mr. Farley: Yes.

Mr. Spohn: I ask the question be divided. The witness testified he never saw the Exhibit L until today.

The Master: I should think if anything the question should be restricted to Exhibit L, rather than M. L is a copy.

A. Exhibit L I will say I never seen before.

(496) The Master: Would you examine Exhibit L and see if there is anything there to cause you to say it was a time study prepared by yourself or not?

A. I don't know of any comparisons here.

The Master: You don't know who the time study was originally prepared by?

A. This was originally prepared by me.

The Master: Exhibit L?

A. But this I don't know anything about.

Q. You are referring to the particular writing here in the book. You mean you didn't write that in the book? A. No, sir; I did not.

Q. My question was this, by looking at the operations listed and the times given for the operations, can you state from examining that whether it was prepared from a time study of your department? A. Well, that I can't say. The cost seems to be approximately the same all the way through, and who did this I don't know.

Q. You mean who made the writing? A. Who made the writing I couldn't say.

Q. Were you the only time study man at the Highland Park plant in and around about 1923 or 1924? A. Yes, sir.

Q. Do you know a man by the name of Spencer Libby? A. Yes, sir.

Q. Do you remember when he was a foreman of the department there? A. Yes, sir; he was a foreman of the department at the time I took the study.

(497) Q. Where would Libby or any other foreman of the department get such information as contained in the first six operations listed?

Mr. Spohn: Well, just a moment now. Objected to as incompetent, irrelevant and immaterial. How would this witness know?

The Master: I don't know how he can unless he is familiar with all the possible sources of obtaining such information at the Ford plant.

A. I am.

The Master: You are?

A. Yes, sir. I know just about how they would go after this to get it. They would refer to our sheets to get that.

The Master: Is there any other place at the Ford plant to get such information?

A. No, sir.

The Master: I will overrule the objection then.

Q. Just one other question. You stated you were removed from the Highland Park plant to the Rouge plant in 1925. What work were you assigned to at the Rouge plant when you were sent there in 1925? A. I was time studying, sir.

Q. Do you know when the time study department at the Rouge plant was started under Mr. Klopsic? A. That I can't just say. I was on production in Highland Park at the time I was taken into the Rouge plant, and I don't know the exact time.

Q. Let me get this straight. When you were transferred from the (498) Highland Park plant you say you were on production? A. Yes, sir.

Q. You mean you were working on production in Highland Park? A. Yes, sir.

Q. And just what do you mean by working on production? Trying to push work out? A. No, sir; I was working production. I was transferred out of the office on to production.

The Master: You mean you were actually on the line?

A. Yes, sir; building tops.

Q. Oh, I see. Then you were transferred to the Rouge and you continued on production work? A. No, sir; I continued on time study work.

Q. You were then transferred back to time study work? A. Yes, sir.

Q. Under whose supervision? A. Mike Klopsic.

The Master: What year were you transferred back to time study work?

A. I think it was in 1925.

The Master: Was Mike Klopsic head of the department then?

A. About five or six months before I came in.

Q. At any rate when you were transferred then from Highland Park to the Rouge you were assigned to work under Mike Klopsic? A. Yes, sir.

Q. What is your usual practice, Mr. Marentette, or what was your usual practice, if there has been any change in 1924, and let **(499)** us say even at the present time. Suppose a company gets in a line of new production machinery, something they haven't used for some time, or never used before to change operations around, do you make a time study of that job immediately after the machines come in, or do you wait? A. We wait a certain length of time until the machine has produced certain parts, and then we take a time study.

Q. You endeavor to wait until they have got the machines operating? A. Yes, sir.

Q. And operating efficiently? A. Yes, sir.

Q. You don't make those time studies immediately after? A. No, sir; we do not.

Mr. Farley: I think that is all.

Cross Examination by Mr. Spohn.

Q. You have been on time study work eight or nine years? A. Approximately.

Q. And most of that was in the Highland Park plant? A. Yes, sir.

Q. You are not on time study work now, are you? A. No, sir.

Q. And you haven't been for some time? A. Well, approximately three years.

Q. As far as this Exhibit L is concerned, that is, that notebook there— A. This notebook, yes, sir.

(500) Q. So far as your information goes that may have been copied from a time study made by you at any time? A. Made by me.

Q. And any operations left out of it they wanted to be left out? A. Yes. I wouldn't say to that because I don't know what they would do. Those are available, if they had those books.

Q. Will you look at Exhibit N and look at the note at the bottom of it? A. Yes, sir; "Operation 12 and 13 H list transposed."

Q. What is the H list? A. The H list was the previous list to I.

Q. What does that note mean? A. Well, it means that the transposition of operations, possibly they were doing one operation where they should have done it ahead of another, or possibly behind the other.

Q. But both operations were in the H list? A. With the exception of the straightening operation.

Q. On your notes you see operations 12 and 13? A. That was the previous operation sheet from this one.

Q. Yes. A. Yes, sir.

Q. And operations 12 and 13? A. 12 and 13 of the H list.

Q. Transposed, that is, one put ahead of the other? A. Or probably the other way around.

Q. Operations 12 and 13 on the H list then would be the turning and straightening? A. 12 on the H list might be—

(501) Q. 13? A. 13 on the opposite list, or the other way.

Q. Exhibit N. A. That is the idea.

Q. And 13 on Exhibit N may have been 12 on the H list? A. It might be that way.

Q. Just transposed? A. I don't remember what the operations were at that time.

Q. You just transposed the operations in Exhibit N? A. Yes, sir.

Q. Both operations were in both lists? A. Yes, sir.

* * * * *

(503) Mr. Farley: I should have offered Exhibit N while the witness was here, the time study of October 8, 1924, photostatic copy of which is attached to Defendant's statement of account as Exhibit 14. I make the offer, if your Honor please, of both Exhibit 14, which is a photostatic copy of the other.

The Master: Well, I will admit the exhibit in evidence. Do you want to object?

* * * * *

---

(522) A. M. Wibel was thereupon recalled as a witness and, being previously duly sworn, testified as follows:

Re-Direct Examination by Mr. Farley.

* * * * *

(551) Q. (By Mr. Farley, continuing): In connection with these Walcott machines, did you ever make, have made, any particular study to determine how the machines were operating? A. Yes, sir.

Q. And will you please state what that was that you did in that connection? A. Well, those machines were in use for a considerable length of **(552)** time. The equipment was new to a certain extent, anyway, to our operations, and in nearly every case an important machine of that kind we send an engineer to specifically check over that group of machines, what it is doing each week, and any one of the engineers in his department may be assigned to that particular kind of work. And that was done in this particular instance.

Q. Now, you say that was done in that particular instance? A. Yes, sir.

Q. Now, then, I show you a number of photostatic copies entitled, "Mr. A. M. Wibel, report on Melling cam shapers, week of August 11 to August 17, 1924." Is that what you had reference to when you said that that was what was done in this particular instance (handing exhibit to the witness)? A. This is a copy, a photostatic copy of such a report run week by week.

Q. Was that the report that was authorized by you? A. Yes, sir.

Mr. Farley: I might state that the copies of those have already been introduced in evidence, they are marked Exhibits W-1 to W-14, inclusive. I don't know whether you have copies of them, your Honor.

The Master: No, I don't.

Mr. Spohn: They haven't been introduced.

Mr. Farley: They have been marked for identification, rather.

(The witness handed exhibit to the Master.)

A. In explaining one of these recap sheets, this one that I have **(553)** in my hand, dated 8/18/24, shows the brass tag number of the machines in question. And, on each one of those machines for that week, it shows the number of pieces that the machine is assigned to that it produces, and then it shows the number of hours run for each machine for that week. And then it cites the machine trouble they had for that week on each machine. That is, in hours and the number of tools and the amount of, and the stock and the number of the operations. Now, these are the hours lost due to all of those different things.

You see, in this case here, the operator was absent. That would have to do with it also, and the various other things that apply to that that are under those headings.

And then the recap here to the right end under "Remarks" shows broken tools, and so on. Those are all recapped. And then you take it week after week, and on the final sheet, the whole number of weeks are totalled, and your conclusion as to the fitness of that machine for a particular operation is drawn from that sort of recap.

Q. (By Mr. Farley): I notice that the sheets have the name Payne on there. Who is Payne, if you know? A. He was one of our employees working through the machinery division at that time.

Q. And I notice on the first sheet in longhand, that is Exhibit W-2 the word Payne—Figure a percent efficiency —Wibel—is that in your handwriting? A. Yes, sir.

Q. And did you authorize this engineer, Payne, or employee, to make the survey of this particular operation? **(554)** A. I did, yes, sir.

Q. Do you recall any of the facts in connection with your reasons for ordering this survey? Had anyone called to your attention any particular difficulties you were having

with the machine? A. When we have machines assigned to operations we have our shop men continually contacting these machines, and when trouble is reported, they weren't coming up to expectations, and in order to let it rest, we put a special checking operation or checking sheet such as we have shown here, until something different sets up.

Q. Now, this series of reports gives, I think there were ten weeks' study of those machines, and that study is shown on each of the pages, including a check as to the actual number of hours run, and the machine trouble, and all of that sort of thing; now, in connection with this notation, "Payne, Figure a percent of efficiency." That was a direction by you to Mr. Payne to give you some sort of a figure on the percentage of efficiency, is that correct? A. That was to give a resume of the complete set of facts so that we could get some idea as to what we could consider the efficiency of that machine.

Q. Now, I wish you would look at the last sheet, Mr. Wibel, which is marked Exhibit W. I can't make out whether that is 14, or 19.

Mr. Spohn: 14.

Q. (Continuing): W-14. And I see on there in longhand about "Sixty percent no good." In whose handwriting is that notation? A. That is my handwriting.

(555) Q. Now, will you please explain to the Court just about how you arrived at the figure of 60 percent? I notice that in the first column you have, "Hours run: 50.7." In the last column, next to the last column, "No stock" is 6.3; and, in the next, in the very last column at the right—6.7. Are those figures, 50.7 and 6.3 and 6.7, are experiencing trouble percentages, are they not? A. They are, and the computation by me was evidently made by me in about this manner. I looked at the 50.7 and 6.3 and 6.7, and gave the machine the credit of the last two, and said that the machine was about 60 percent efficient as far as the machine ran. We blamed that on the stock and the operator, and any time the operator might have been absent due to some behaviour of the machine.

* * * * *

(556) Q. Well, I have here in front of me a number of photostatic copies of inventory cards relating to the

shapers (handing copies to the witness), and I ask you to refer to them and notice that this particular one (indicating), shows the—now, let's see— A. (Interrupting): Well, the first machine bearing factory serial **(557)** number or brass tag number, as we call it, was 7089, and that machine was installed on 10/26/14.

Q. So, those machines, if they had been in use, then, at that time, let us say, 10 years when the Model T, or Walcott machines were ordered for the Model T, would that be about right? A. Yes, sir.

Q. Subject to whatever—we won't take the time to check them now—subject, however, to dates of later acquisition, as might appear from the permanent inventory records? A. Yes, sir.

Q. What would be your experience there, Mr. Wibel, concerning these shapers, which already had been in use in the plant of the company for, let us say, a period of eight, ten years; would those machines be expected to run very many more years, or had they about outlived their usefulness, or what would be the facts there? A. It would all depend upon the policy of your company as to maintenance. They would be very badly worn in most cases; because some types of machines, maintenance, can't always keep repairing the parts that are badly worn. But, as a rule, we would consider a machine 10 years old or even 8 years old, an old machine.

Q. Well, that, so that at the time the order for the Walcott machines was given, some of the shapers needed replacement? A. That would be the ordinary procedure and the ordinary conclusion that we would draw.

Q. Do you know of any reason why, Mr. Wibel, why the shapers were not used by the Ford Company in the production of the Fordson camshafts? **(558)** A. Well, the production of the Fordson camshafts was low. It was a type of thing that might not necessarily have the same equipment in every case. Those operations didn't parallel each other 100 percent. Even some of the boring operations, and some of the other operations were slightly different. Just what the reasoning was of the original tractor installation, I don't recall all the facts about that now.

Q. Well, what were the facts insofar as the tractor and Model T cars being prepared or machined in the same de-

partments of the Ford Motor Company at that time? I mean, was tractor production under the supervision and control of the same shop supervisors and executives, or were they entirely separate? A. Well, as I recall, the shop supervision is different.

Q. And up to the time that the Model T production stuff was moving from Highland Park, it was still—the production was located in two different plants, wasn't it? A. One in the Rouge plant, and the tractor at the Rouge plant, and the Model T at the Highland Park plant.

Q. And was it ever called to your attention, at any time, Mr. Wibel, the relative or comparative cost between the production of Model T shafts on the camshaft shapers as compared to the cost of producing those on the Walcott machines? A. It might have been called to my attention. I don't recall the incident especially or where that particular thing was.

Q. When, if ever, did you ever learn that it might have cost you more to produce those camshafts on the Model T, on the Walcott machines and the shapers? A. Well—

Mr. Spohn: Now, if your Honor please, that is a pretty (559) leading question. In view of the witness' answer to the last question, it is fairly leading.

The Master: Well, I think I will let it stand.

A. The circumstances that would come up when we would check up the equipment, that is, we would have our engineers, the different supervisions and the handling of the machining of the tractor camshafts and the Model T camshafts, they would check both operations, and we, of course, knew how the tractor camshafts were machined at that time, and we would draw a conclusion from that, and the conclusion we would draw was that the camshaft as machined by the tractor division was much more expensive.

Q. I wasn't thinking of a comparison of the cost of machining the tractor camshaft and the Model T camshaft. I have in mind, and my question was, did it cost—do you know whether it cost you any more money, or was it ever called to your attention during the operation of the Walcott machines, that those machines were either more costly to operate than the shaper operation had been, or less costly than the shaper machine has been? A. I don't recall any comparison made like that.

Q. Were you familiar with the operations that were required when the shapers were used to prepare the shaft for the shaper operation, in a general way? A. In a general way, yes. There would be forging and going through the forging operations.

Q. Do you happen to know whether immediately prior to changing it, whether there was any distinction between the preparing of the shaft for the shaper and preparing the shaft for the Walcott **(560)** machines, as to whether there was any difference required or any different operations required? A. Insofar as what we knew at the time the Walcott machines were ordered, I am sure we didn't consider any difference in the work to the machine.

Q. Yes.

The Master: Well, do you know if there is any difference in the practice?

A. I do know there was a difference.

Q. (By Mr. Farley): And what was that? A. It was necessary to follow the Walcott operation up with a straightening machine before—

The Master (Interposing): Why? Do you know?

A. Due to the manner in which the machine handled the work. It is quite often that forgings are off to a certain extent, and in order to take certain types of operations you have to straighten them, and it is usually done with a small arbor press, or a punch press.

The Master: You say that was not necessary with the use of a Ford shaper?

A. No, sir, it was not.

The Master: Well, if you had a shaft that was slightly bent in using the shaper, wouldn't that affect the shaper, the shape of the cams obtained?

A. It would all depend on the manner in which the camshaft was held, and the action of the tools. Two machines might act entirely different in that regard.

The Master: Well, the shaper—are the tools of a uniform **(561)** height above—well, the ground, shall I say—as they are going across the shaft?

A. In the case of the shaper, it was a shaper cut just moving across, a different kind of cut than what was used with the Walcott machine.

The Master: Well, if the—because of the fact that the shaft was slightly bent, some of the cams were of a greater height than the others, wouldn't that result in those cams that were of a greater height to be cutting down more than others?

A. It would. But that is of a very common characteristic of forged parts. Forging die, to start with, is new, and the forgings come out much more perfect, and as the die wears, that might cause inaccuracy or a little opening of the piece itself might cause a little inaccuracy, but that might be handled very easily by the shaping machine, and was.

The Master: Well, I am wondering whether or not you are sufficiently familiar with the operation of a shaper just to know why it was unnecessary on a shaper?

A. Well, it has been a long time since I inspected those machines. But, as I recall it, the type of operation was entirely different in that the type of machine as to its solidity and the holding of the work. I can visualize myself that it might very easily take a straightening operation on the Walcott machine.

The Master: Well, as far as you can testify, you simply can state that from your knowledge of the operations that no straightening operation was used in the Ford shaper, but you (562) can't explain why, from the mechanics of the machine, it was unnecessary to have a straightening machine for sprung or bent shafts than was necessary on the Walcott?

A. I think I have explained that to your Honor. It is the way the shaper cuts across the cam on the camshaft.

Q. (By Mr. Farley): Do you know what the relative speeds of rotation of the work shaft and the shaper would be as compared with the speed and rotation of the shaft lathe, which one turned the faster, fast or slow, do you recall any of those details? A. I don't recall exactly, but I would say from memory that the rotation of the shaft in the shaper was slower.

Q. Very slow? A. I think so.

Q. Would that be a factor and necessity for a straightening operation? A. It would be a factor, but from my own opinion it wouldn't be as an important factor as the ones I have mentioned. I think it would be quite a factor also.

The Master: When you found that the Walcott machines did not live up to the guarantee that was made on them and the expectations, did you give any consideration to replacing them with shapers when they became worn?

A. We might have done so. I don't recall exactly what our reasoning was at that time.

The Master: How long before the purchase of these 16, the second series of 16 machines were the three original ones purchased?

A. I believe we purchased the first two in January, and the date **(563)** of the 16 were just a short time after—4/1/24.

The Master: Do you know whether you made any studies on the operations of the first three machines as distinct from the other 16, before you purchased them?

A. Yes, sir. We didn't make studies, however, as we did on the later use of the operations, or machines, because the time element didn't permit that.

The Master: In spite of the studies you did make, however, you did conclude that it would be wise to purchase 16 more of that type of machine?

A. Yes, sir.

Q. (By Mr. Farley): Mr. Wibel, can you state whether or not the Ford Company maintains any particular department for the design, construction or modification of its production machinery, either new or existing? A. It does, yes, sir.

Q. And how large a department of that type do you have? A. I don't know the exact number of men in the department, but it is a large part of our operations.

Q. Who is in charge of that department? A. Mr. Pioch.

Q. And do they in that department design new machinery from time to time in any quantity? A. Design new machinery, I would say, as a general rule, when we feel that the market does not give us the type of and kind of equipment that we need for a particular operation.

Q. You are one of the Ford executives, are you not, Mr. Wibel, who regularly meet with the other principal executives in the offices **(564)** of the company each day for luncheon, and have a discussion of matters of general business of the company with respect to all sorts of activities of the company, isn't that true? A. Yes, sir.

Q. Do you know anything, as a result of your conferences there, and your regular duties, whether the company does from time to time design new machinery and put it in operation? You know that to be a fact from your own department, don't you? A. I know it from my own department. I know it from contacts with other departments, and I know it from contacts with our executives.

Q. Now, do you ever, in connection with your general management and operations of the Ford Company, consider changing any of the parts of the car in order to facilitate production methods? A. Quite often.

Q. As the head of the purchasing department of the Ford Company and as charged with the responsibility of buying the particular Walcott machines, would you have purchased those machines in 1924 if you had known at that time that there was any question that those machines here would be charged with an infringement of a patent?

* * * * *

(565) A. I say we would not have purchased the machines for us at that time.

Q. Do you regularly consider such matters, Mr. Wibel, in connection with your duties, that is, the question as to whether or not possible infringement might arise? A. We always must bear that point in mind, but the type of our purchase order covers that situation, and we don't always go into every detail. As a matter of fact, I would think that would be an exception.

Q. That is in the purchase of production machinery? A. Yes, sir.

The Master: Well, what do you mean when you say that your purchase order takes care of the situation?

A. Well, purchase order has a patent infringement guarantee clause in it.

(566) The Master: Oh, in other words, you usually deal with responsible sellers, and you expect that if there is any possibility of patent infringement, that in the event that any litigation will arise, the seller will take care of it.

A. If a machine tool manufacturer sells us a tool to do a certain kind of job, we assume that the responsibility of the infringement phase of that is his.

The Master: That is as between you and the seller.

A. That is as between us and the seller, yes, and to further that line of reasoning, our orders are prepared like that.

The Master: But, except in a very exceptional case, you make no independent investigation to determine whether or not the particular machine that is being sold to you may be constituting an infringement of, or the use of such machine may infringe an existing patent?

A. I would say that to make a detailed search into the patent would be an exception. We assume that the machine can be sold and used in the regular business procedure when the man approaches us to sell it, that is a responsible company in doing so.

The Master: Well, under what exceptional circumstances do you make an investigation into the infringement?

A. Where a company might have been in litigation or where his financial structure might be in question or where some particular happening had taken place to draw unusual attention to the facts pertaining to a machine tool.

Q. (By Mr. Farley): Is the situation with respect to machine tools different in that respect from a consideration of parts put in the construction that go into the car? **(567)** A. Very considerably different.

Q. Yes. Now, if you knew of a situation, for example, where there had already been some patent litigation or threats of an infringement received by the company

before the purchase of production machinery, is that a question that would have any considerable bearing as to whether or not you would or would not purchase that machine? A. The procedure would be the same practically whether it were production machinery or whether it were maintenance machinery, because, after all, one depends on the other, because as far as the patent phase of the situation is concerned—

Q. (Interposing): Well, my question is directed, not so much as to the type of machinery, but as to the proposition as to what it would be insofar as the purchase is concerned; if you knew there was a possibility of patent difficulties because of the purchases? A. We would be more concerned, I believe, if I understand your question correctly, with reference to the production machinery because the production machinery involves so much more responsibility. It has to do in many cases with millions of parts.

Q. Yes. My question is directed to this: Have you had any reason to talk over patent difficulties with a purchaser for any purpose whatever, whether it was production, maintenance, or whatever it may be; would that have any influence at all in determining whether or not you would purchase the machine? A. It certainly would, yes.

The Master: Did you have any dealings with the Walcott Company before they sold you these machines?

(568) A. I don't recall whether we did or not.

The Master: Did you know whether it was a financially responsible company?

A. We assumed that it was.

The Master: Did you make any investigation or inquiry to determine that?

A. Only in the regular way; his reputation, and we didn't have any special investigation.

The Master: Did you suppose that it had substantial assets, that it was a large company?

A. I don't think we considered it a large company.

Q. (By Mr. Farley, continuing): Now, since you have been in charge of the purchase, director of purchases of the Ford Company, and let's see, prior to that time, in

charge of what is now Kellogg's department—for how many years has it been, Mr. Wibel, that you had been connected with the purchase of production machinery for the Ford Company? Some 20 years or more, is it? A. The purchase of production machinery with Ford Company still passes through my hands.

Q. Yes, but how far back does that experience go? A. 27 years.

Q. 27 years? A. Yes, approximately 27 years.

Q. And, throughout all that experience you have had, I assume, a great many machines, probably thousands of machines called to your attention by manufacturers of machine tools for sale to the Ford Company, is that correct? A. Yes, sir.

Q. Do you know of any instance where the builder of any machine tool, **(569)** offering that machine for sale to the Ford Company, had offered it on the basis of the company paying to the builder a sum of so much per piece for each piece turned out on the machine? A. There may have been instances where that sort of thing was offered, but I certainly don't recall them, as they certainly were not common.

Q. Would you, as the director of purchases for the Ford Company, recommend to the company in any event that they purchase a machine for which they would have to pay so much per piece for the use of the machine during the time the company was using it? A. I would not.

Q. Then, how do you purchase machinery which you do use for production purposes. I mean on a lump sum basis or how? A. The representative of the particular machine tool represents what he can do, and we use our own judgment as to whether the proposition he has made is one that we wish to take advantage of, and if the machinery is satisfactory, it is paid for, and it goes into our regular line of equipment.

Q. Now, are you sufficiently acquainted with the general policy which prevails in not only—let us say, in the machine tool industry, in connection with that sort of a set-up, whether machines are sold as a general policy on a lump sum purchase price or on a basis of a continuing sum to be paid every time the machine turned out a piece of work?

Mr. Spohn: Now just answer that question yes or no.

A. Yes.

Mr. Spohn: I object to that as incompetent, irrelevant and immaterial.

(570) Mr. Farley: Again, in view of the objection, I will ask counsel if he will stipulate here that the plaintiff here is making no claim or pretense that under any circumstances there could be a reasonable royalty of so much per piece turned out by these machines, turned out by the Ford Motor Company. If it will be so, I will withdraw the question. Otherwise, the objection is just as unsound as the other.

Mr. Spohn: Is the other one unsound?

Mr. Farley: Decidedly.

The Master: Read back the question.

Mr. Spohn: I will stand on my objection, your Honor.

(The question was read by the reporter.)

Mr. Spohn: If your Honor please, the objection goes to the fact that we are not dealing here, not with the question of custom; we are dealing here with the question of profits.

Mr. Farley: Might I suggest, Mr. Spohn, that you read the cases dealing with reasonable royalty.

I am quite sure that your Honor, with your readings, is very familiar with the doctrine that reasonable royalty is the amount that reasonable business men called upon, meeting one another, free to deal with one another, would adopt in connection with this, or a similar transaction.

Now, if a reasonable business man in an industry never followed such policy, how can the claim of reasonable royalty here be in the slightest degree reasonable if there is something that no one has ever heard of in any industry.

Mr. Spohn: If your Honor please, if that is counsel's position as to the law in this case, simply because automobile **(571)** manufacturers may not have paid royalties—

Mr. Farley: (Interposing): I am speaking of machine tool industry.

Mr. Spohn: I am sorry. Machine tool industry —that that prevents this Court from hearing that question.

Mr. Farley: I don't think there is any necessity of any further argument.

Mr. Spohn: I stand on the objection.

The Master: I will overrule the objection. The answer may be taken.

Mr. Spohn: Now, will you read the question again, Mr. Reporter.

(The question was repeated by the reporter.)

A. I am.

Q. (By Mr. Farley): Are they sold? A. Sold as a machine tool with no relation made to the royalty phase of the situation at all.

Q. Yes. Now, the same question with respect to the automobile industry.

Mr. Spohn: Same objection.

The Master: Same ruling. I will hear the testimony.

A. I would say that it is even more applicable to the automobile industry.

Q. That no one buys machinery on the basis of paying so much per piece for each piece a machine turns out? A. That is right.

The Master: With what other industries are you familiar with the custom in purchasing machine tools.

(572) A. I am familiar with the machine tool builders and the manner in which they sell their machines.

Mr. Farley: You see, the machine tool business, your Honor please, are the type of people that make machinery for production purposes and sell it to the automobile industry and builders of ships and all sorts of things. That is what we call machine tools, shapers, planers, tools like that. It is a very, very extensive industry.

Q. (By Mr. Farley): Now, Mr. Wibel, there have been certain statements of account and computations filed in this case. Plaintiffs have filed a statement in which it is purported to show that by the operation of these Walcott ma-

chines, the Ford Company made very large and substantial profits. That computation is based on the assumption almost entirely on the assumption, with the exception of a comparatively small manufacture—well, manufacture of a few million, I will say, Model T shafts, that if the Ford Company had not purchased these Walcott machines in 1924, they would have had to employ Landis grinders for the manufacture of over four million Model A and Model F shafts—do you follow me? A. Yes, sir.

Q. Are you familiar with the Landis grinders? A. Yes, sir.

Q. What would you have to say concerning the proposition that if the Ford Company had not known of these Walcott machines, or had not purchased these Walcott machines, they would have been compelled to machine over four million Model A shafts by the use of Landis grinders? (573) A. I would say that we wouldn't draw that conclusion.

Q. You would say that you wouldn't draw that conclusion? A. I would say that we wouldn't draw that conclusion.

Q. Well, I would like to have you state, Mr. Wibel, if you please, state what the facts are and what your position with respect to that sort of a thing would be, as a man holding an executive position in the Ford Company, and charged with the purchase of production machinery and with some knowledge of the Ford Company's methods of the design and the production and all that sort of thing? A. Had that problem come up before us at that time, we would have immediately checked in all the equipment we had on the job for machining pieces of a like nature which would have been the Model T camshaft, and we would have determined whether there was anything that we could do with that machine that takes the other tractor or the Model A camshaft or whatever the problem might have been at that time; I think that would have been the procedure and it certainly would have been my reasoning at the time.

Q. Would you state what the plausibility would be, or the possibility of the Ford Company employing Landis grinders for the production of Model A camshafts? Would you say that it would be altogether possible you might

have ever resorted to that method of machining those shafts if you did not have the Walcott machines? A. Well, that would be—it might have been possible, but it wouldn't have been probable. We would have considered an extensive manner of doing it in the manner in which we were doing the **(574)** camshafts then.

The Master: What manner are you referring to, by the way?

A. The shaping method.

The Master: You were using the grinders in preparing or processing the tractor camshafts at that time?

A. I believe we were. I think that is right.

* * * * *

(577) Q. And I believe the point was raised by a certain witness that testified in this proceeding here that a shaper was not an efficient machine tool because of the fact that it, like a planer, had an idle stroke, and then a cutting stroke. What would you say about that? A. I would say that is a principle that is recognized in machine tool practicing, and we know it is inefficient, and we don't use it unless the circumstances of the job demand that we use it.

Q. And, nevertheless, thousands of planers and shapers are used with the regular production machines? A. Yes, sir, they are a regular part of the machine tool equipment.

Q. Now, I ask you, Mr. Wibel, do you know what type of equipment is now used by the Ford Company for machining its camshafts? A. We cast our camshafts, and the procedure is, as I recall it, different. We finish grind.

(578) Q. You now no longer use any of those that the industry would call a machining operation? A. We finish the shaft directly from the cast camshaft condition.

Q. And you eliminate all of these operations? A. We have.

Q. Such as turning or milling or shaping? A. Yes.

Q. As were formerly used? A. Yes, sir.

* * * * *

(742) CHARLES GORDON was thereupon recalled as a witness, and having been previously duly sworn, testified further as follows:

CROSS EXAMINATION by Mr. Farley.

Q. Mr. Gordon, you have produced a certain paper which was offered in evidence as Exhibit GG having to do with a release and settlement with the White Motor Company, and which was signed by you as president of the Gordon Form Lathe Company. That is correct, isn't it (handing document to witness)? A. Yes, sir.

Q. You did not, when your testimony was taken concerning that, tell the Court that there was another agreement in addition to that, which was signed by your company with the White Company, did you? A. I don't remember that I did.

Q. Well, there was another agreement between your company and the White Motor Company of which that forms a part, isn't that true? A. I don't remember any other agreement. It is quite possible there was, because—

Q. (Interposing): Are you familiar with the agreement made between your company and the General Motors Company, General Motors Corporation? A. Well, to the extent that I read over all the agreements before I signed them. That would be the only time that I would probably ever see them.

Q. I show you paragraph 8 of Defendant's Exhibit 71, which was introduced in the trial before Judge Tuttle, which purports to be an agreement between the Gordon Form Lathe Company and the (743) General Motors Corporation. I call your attention to paragraph 8 of that agreement which refers to an agreement with the White Motor Company dated February 6, 1930. Now, this particular letter, which was introduced as Exhibit GG, is not the one identified by the agreement dated February 6, 1930, is it? (Indicating.) In other words, paragraph 8 of that agreement appears, if your Honor please, in volume III, pages 1046 to 1049, inclusive. A. White Motor agreement, dated December 21, 1929, appears to carry the same date as this agreement.

Q. That is as Exhibit GG? A. As Exhibit GG, yes.

Mr. Farley: Now, I would like, if your Honor please, to call upon Mr. Gordon and his counsel to produce the White Motor Company agreement dated February 6, 1930. Do you have that in your possession?

Mr. Michael: I don't think it is here. I thought they were both here.

The Master: Will you produce that agreement?

Mr. Michael: Gladly, yes.

Q. (By Mr. Farley, continuing): Are you aware of the fact, Mr. Gordon, that the White Motor Company agreement dated February 6, 1930, contained a paragraph to the effect that neither of the parties to that agreement would use that agreement in connection with any litigation against any other parties based on infringement occurring prior to the date of the agreement?

Mr. Spohn: Objected to as incompetent, irrelevant and **(744)** immaterial; hearsay, if we are going to produce the agreement.

The Master: We will get the agreement, and it speaks for itself.

Mr. Spohn: The agreement will speak for itself.

The Master: You needn't answer that question.

Mr. Farley: Very well. That will be all, Mr. Gordon.

(Witness excused.)

Mr. Farley: I will call Mr. Dahl, please.

THEODORE R. DAHL was thereupon called as a witness on behalf of the Defendant herein, and having been first duly sworn, testified as follows:

DIRECT EXAMINATION by Mr. Farley.

Q. What is your name, please? A. Theodore R. Dahl.

Q. Where do you live, Mr. Dahl? A. I live in Cleveland, Ohio. I am some 53 years old. I am a lawyer by profession, finishing the University of Minnesota Law School in 1910. Practiced law in Cleveland some two years, until 1912, and then I went with the White Motor Company

as its office attorney and remained there for 23 years in various capacities, from assistant secretary to executive vice-president, member of the board of directors, and office attorney.

Q. In or around, or about the year 1929, what was your position with the White Motor Company? **(745)** A. The White Motor Company, my official title was Secretary.

Q. And, did you have anything to do with the legal matters arising in the company in connection with the business of the White Motor Company in and around 1929? A. I handled all our legal matters, and had no other legal advisers other than our general counsel downtown.

Q. In connection with those duties, did you have anything at all to do with a certain agreement made by the White Motor Company with the Gordon Form Lathe Company? A. Yes, I handled the settlement; was responsible for it, and determined to make the settlement—

Mr. Spohn: Just a moment. The question was did you have anything to do with it. Will you please answer the question yes or no. I move the rest of the answer be stricken.

A. The answer is "yes."

The Master: I will strike the rest of the answer.

Q. (By Mr. Farley, continuing): Do you know a man by the name of R. M. Cooper? A. He was one—yes.

Q. And who was he? A. He was one of my assistants who handled my patent work.

Q. Was any work done by Mr. Cooper done under your supervision? A. Yes.

Q. When you were Secretary of the White Motor Company in charge of legal matters, did you have anything to do with a settlement made by the White Motor Company with the Gordon Form Lathe Company? A. Yes.

Q. Do you have a present recollection of that particular matter? **(746)** A. I have.

Q. Now, will you recite, as far as you can recall the facts, the facts which led up to that settlement?

Mr. Spohn: Now, just a moment. May I have a preliminary question or two, your Honor, before the witness answers that?

The Master: Go ahead.

Mr. Spohn: Mr. Dahl, are you now connected with the White Motor Company?

A. I am not.

Mr. Spohn: Are you practicing law now?

A. I am not.

Mr. Spohn: And, when did you leave the White Motor Company?

A. October 1, 1935.

Mr. Spohn: And, are you here under subpoena?

A. No.

Mr. Spohn: You are here voluntarily to testify?

A. Right.

Mr. Spohn: Now, if your Honor please, I object to the competency of the witness to testify to any transactions at all concerning the White Motor settlement or its negotiations. The relationship of attorney and client persists. The witness is here voluntarily. No proper background for the giving of this testimony is in the record at this time.

Mr. Farley: Counsel apparently forgets that they called one Howard Jones to testify concerning this matter.

Mr. Spohn: He is not a lawyer.

Mr. Farley: As far as the relationship of attorney and **(747)** client is concerned, my understanding of the law is that that, if there is a confidential relationship, is one which can be invoked only by the persons who are in the confidential capacity. I have never heard of any objection being proper coming from a third party who has no part of the confidential relationship.

Mr. Spohn: Why, if your Honor please, does counsel mean to state that simply because the client isn't before the Court, or isn't a party, that the client's attorney can get on the stand and tell private communications, confidential of nature, between that attorney and the other client when he isn't there even

to offer his objection to it? I never heard of such a thing.

Mr. Farley: When I get to the point of discussing confidential matters, then I think it will be plenty of time for Mr. Spohn to make the objection.

Mr. Spohn: If your Honor please, the confidential communication extends to all of the negotiations with respect to this White agreement.

Mr. Farley: Why did you use it then?

Mr. Spohn: I didn't use it then; I used the agreement.

The Master: Well, to the extent the communications are negotiations between attorney for the White Motor Company and the opposite side of the agreement, the confidential communications which come within the scope of the attorney-client privilege consist of the advice given by the attorney to his client and the things that are said when the client is requesting advice by his counsel. I don't think they **(748)** extend to negotiations with the other side.

Mr. Spohn: But, the question, your Honor, called for all the facts, all the facts.

The Master: The question is so broad it might, if it were fully answered, cover matters which are within the scope of the attorney-client privilege.

Mr. Farley: Might I have a further question or two?

The Master: Go ahead.

Mr. Farley: I think I can dispose of that very quickly.

Q. (By Mr. Farley, continuing): At the time we are speaking about, Mr. Dahl, you were then an officer of the White Motor Company? A. I was.

Q. And you were not merely a lawyer, whom the White Motor Company was your client? A. That is right.

Mr. Spohn: But, you did handle all—may I ask a question on that? We are still under my objection.

The Master: Yes.

Mr. Spohn: These are all preliminary questions.

The Master: That is right, there has been no ruling on the objection yet.

Mr. Spohn: You were the attorney for the company, office attorney for the company, and as you stated you handled all legal matters around 1929 for the company.

A. For the company, correct.

Mr. Spohn: Yes.

Q. (By Mr. Farley, continuing): Now, I would like to call your **(749)** attention, before being called as a witness here, have you had any discussion concerning this matter with Mr. Black, the president of the White Company? A. No.

Q. Have you, before coming here, been granted access to the files of the White Company? A. I have.

Q. And, the White Company are aware of the fact you were going to appear as a witness here? A. That is right.

Q. And, were you placed under any obligation by the White Company not to discuss any of these matters? A. Not in the least.

The Master: Who in the White Company was aware of the fact you were going to appear here as a witness?

A. Off the record may I just tell you?

Mr. Spohn: Not off the record; nothing off the record, no, sir.

The Master: On the record.

A. The president of the company, the secretary of the company, and—no, I am not sure about that; the president of the company and secretary of the company, that is all.

* * * * *

(755) Q. (By Mr. Farley, continuing): As secretary of the White Company at that time, Mr. Dahl, did you have anything to do with that settlement? A. I did.

Q. Will you please state the facts which came to you as secretary of the company which decided you to engage in, or participate in that settlement?

(756) Mr. Spohn: I object to that. It is a privileged communication between attorney and client stating facts.

Mr. Farley: The facts—he is the secretary of the company.

Mr. Spohn: He is the attorney. You can't be an attorney on one hand and secretary on the other, and withdraw from the privilege of attorney and client because you are secretary.

* * * * *

(758) The Master: The witness on the stand testified he was handling this matter in a legal capacity—

Mr. Farley (Interposing): I would like to have the witness state just what the facts are in that connection.

Mr. Spohn: Just all preliminary to the general objection.

Mr. Farley: Yes.

Mr. Spohn: I would like to find that out, too.

Q. (By Mr. Farley, continuing): Will you please state, Mr. Dahl, whether or not your duties in connection with this settlement were those in which the relation of attorney and client existed, or were you acting as an officer of the corporation?

Mr. Spohn: If your Honor please, that is not the facts; that is calling for a conclusion on the part of the witness, whether he is an attorney—

Mr. Farley (Interposing): If that does not call for a fact—he was on the job.

Mr. Spohn: Well, if your Honor please—

The Master: I will overrule the objection.

A. I can answer that question categorically, I believe. I was acting as an officer of the corporation in effecting the settlement. I certainly had to exercise no legal judgment, **(759)** or to base my judgment on no legal experience until after the settlement had been made, and the question of the form of the document setting forth the details of the settlement was submitted to me.

The Master: Well, I will make this ruling. It is certainly true that the privilege is that of the client and not of the opposite side to a lawsuit in which the client is not participating, and the client may waive the privilege either impliedly or expressly, and I think the witness, since we do not have the client present, is the best judge of whether or not the client has made

such a waiver. If the witness thinks he is an attorney, he can testify to communications between himself and the client he was representing, or by whom he was employed, I will permit him to so answer and leave it up to the judgment of the witness as to how far he wants to go on this point.

Mr. Farley: On that, your Honor, I think I should, perhaps, make, and be entitled to make, a statement. After Mr. Jones' testimony was taken, I arranged to have a conference with Mr. Black, the president of the White Motor Company. I had such a conference with him. Mr. Black told me that anything they had in their files, anything with relation to this particular matter, would be turned over to us as freely as possible. Also, it was through Mr. Black I got the name of Mr. Dahl. I questioned Mr. Black concerning the matter and Mr. Black said at that time, "I was not president of the White Corporation; I was not connected with it; I know nothing about it. Mr. Dahl handled all those **(760)** matters and I should see, interview, and talk to him about the thing," and Mr. Black further said that I was to tell Mr. Dahl that he could have full access to the company's files.

The Master: Go ahead, then.

Mr. Farley: Is there a question?

The Reporter (Reading): "Q. Will you please state the facts which came to you as secretary of the company which decided you to engage in, or participate in that settlement?"

A. As an officer of the company I attended all meetings of the board of directors of the National Automobile Chamber of Commerce, of which, in later years, I was a director. At all those meetings reports were made by the Chairman of the Patent Committee to the board of directors in reference to patent matters. At that time for the first time there was called to my attention the Walcott, the Gordon-Walcott case. Later the company received a notice from the Gordon Company advising of certain court decisions, which caused me to immediately contact the Chairman of the National Automobile Chamber of Commerce, and this decision having been made, I considered that it was a matter which the company should attempt to settle.

Q. May I have a question here, Mr. Dahl. In view of the fact that you attended the Board meetings of the Chamber of Commerce at which patent matters were brought to the attention of the Board, had you known that the Chamber of Commerce had taken over the defense of the Walcott case? **(761)** A. I knew that it had taken over the defense, but I don't know at what time I knew it in reference to what I have just said.

Q. Very well, proceed. A. I then called into my office an assistant who handled patent matters for me, a man named Cooper, and had him find out whether we had any of these machines that were alleged to violate a patent, how many, and upon his coming back to report to me he brought with him his superior in the engineering department who was H. D. Church, resulting in a conference between Church, Cooper and myself, in which we discussed our situation, and in which I determined to make an offer of $5,000 to get the thing out of the way. I suppose I ought to probably interpolate and say my principal job with the White Motor Company was really "trouble-shooter," and this was what I considered a rather minor trouble. And, as a result of my instruction to Cooper he wrote a letter, which I suppose speaks for itself, offering a settlement of some $5,000, which offer was refused.

Q. Just a minute, Mr. Dahl. Cooper's letter was introduced in evidence as Exhibit HH. I show you a photostatic copy of it and ask you if that is the letter to which you have reference (handing document to witness)? A. That is it.

Q. Very well. Will you proceed. A. That offer was refused. Meanwhile I was obtaining a good deal of information from the National Automobile Chamber of Commerce in reference to—I am not an engineer and my terminology is probably incorrect—in reference to equipping **(762)** these particular machines we were using with some different kinds of heads, or at least some different kinds of apparatus, which, it was alleged, would avoid the interference with a patent.

I took that matter up through Cooper with the factory, and the production was so slight that they didn't think it was worth doing. We were then either advised by letter or—I think by letter—no, I retract that. Yes, we were advised by letter from the National Automobile

Chamber of Commerce, and I was advised in the directors' meeting, that other suits were about to be brought by the Gordon Company for infringements, and one or two companies' names were mentioned, and the probability was that we would be one of the companies that might be sued. So, again I called Cooper, and in an attempt to avoid suit, asked him to at least try to get a settlement on the machines, which settlement we got of $2,000 a machine, as I recall.

Q. And, that was for the future use of the machines? A. That is my recollection. I would have to refer to the files to be sure of that. But, I wasn't very much interested in the settlement; it wasn't a matter of any particular moment. It was a matter to be gotten away with from as cheaply as possible, and when it comes to details, whether it was before or after, I would have to have an opportunity to refresh my recollection from the White Company files which they delivered to me to take over with me.

All during this time there was quite a ferment among the members of the industry through its meetings in Detroit, and it **(763)** was intimated to us that we probably ought not to settle as a separate company, that we probably ought to wait for the rest of them, but again to avoid suit I told Cooper to go ahead and make the best settlement he could, and as a result we made a settlement, or made a payment of $2,355.00 plus four, something like that—six thousand odd dollars. I think that covers any general statement I could make. I think it is nice of counsel not to object to some of my statements before this.

Q. Now, in connection with that particular payment of six thousand odd dollars, did you as secretary of the White Company take into consideration any question of reasonable royalty?

Mr. Spohn: Objected to as incompetent, irrelevant and immaterial.

The Master: Overruled.

A. I did not.

Q. At the time this settlement was made, did you, in your capacity as an officer of the White Company, have more or less complete authority concerning the question of settlement, or was that a matter about which you had to

particularly refer the matter to someone in a position of greater authority than the position you occupied?

* * * * *

(764) A. I consider that I had complete and final authority to determine the amount of settlement.

Q. (By Mr. Farley, continuing): Now, as to the actual facts, did you or did you not have to consult with anyone as to whether you should not or could make that settlement? A. Well, as a matter of fact, I can probably clear up your question, if you will permit the answer, and that is this, that I did not report it to the board of directors, but that in all matters of this kind we always discussed them with the president of the company, and I, no doubt, told him I expected to or had settled this matter.

Q. Do you know a man by the name of Howard Jones? A. Yes, I know him.

Q. At the time you considered this question of settlement, do you know whether Jones was employed in any executive capacity by the company? A. I know he was not.

Q. And just what were his duties at that time, or his job at the White Company at that time? **(765)** A. If I may be permitted to refresh my recollection of the employment record of the White Company, I will give you his title. (Examining document.) He was shop engineer.

Q. Did you, in connection with your reaching your decision to make the settlement, at any time confer with Howard Jones? A. I never saw him.

Q. Did you know Howard Jones at that time? A. I probably knew him, but it is even questionable whether I knew who he was, but I probably knew him.

Q. You knew of this decision which had been rendered by the Court of Appeals of the Sixth Circuit, did you not, Mr. Dahl, in the case of the Gordon Form Lathe versus Walcott Company? A. I did.

Q. That had been called to your attention? A. It had.

Q. You knew that the Sixth Circuit Court of Appeals had decided that the Walcott machines were an infringement on the Gordon patent? A. Yes.

Q. Will you state whether or not that in any way influenced your decision to make the settlement which you did make? A. Of course it did.

Q. What bearing, if any, would that have had on the matter considering it as an officer of the company having some knowledge of legal matters? A. Why, being a small producer with a very limited output, a specialty plant, not a production plant, and a decision against me as to paying royalties why, would I settle with a **(766)** gun at my head?

Q. Did you consider whether or not the decision in the Walcott case might in the future have been held to be *res adjudicata* against the White Company? A. Read that, please.

(Last question was read by the reporter.)

Mr. Farley: If you don't understand—

Mr. Spohn (Interposing): Just a minute. Just a moment, I think that question is perfectly clear to any lawyer, and won't require any information of counsel in the matter at all.

The Master: Counsel can re-phrase his question. He can withdraw it and ask a second question if he wants to, as long as his second question is perfectly competent.

Mr. Farley: Strike the question.

The Witness: I understand the question. It isn't a question of my understanding it; it is a question of my memory, whether at that time I considered that, and I believe that whether I considered it or not would be determined by a reading of the final contract which we entered into with the Gordon Company, but I don't recall, and I don't want to answer, because I couldn't be perfectly honest in my own mind, and the matter isn't of sufficient importance to me so that I care to trifle with my conscience. That is the truth.

Q. (By Mr. Farley, continuing): There has been some testimony here, and particularly the testimony of Mr. Jones, that part at least of the White Motor Company, was on the basis of ¾ of a cent a cam for past infringement. Will you state whether or not you gave any consideration to that? **(767)** A. I did not, and I can go as far to say that until

I went back to get the White Motor Company files, I didn't know that that had anything to do with it, but I couldn't have helped but have known it, because I saw Cooper's letter stating that ¾ of a cent—stating that the number we had made at ¾ of a cent, plus $2,000 a machine, added up to that amount. It was not at all a question of royalty or reasonableness; it was a question of a settlement of a lawsuit in which there was a court decision against us.

The Master: Well, the Court decision, of course, did not find anything with respect to the profits which —or, royalty, which would be attributable to the machine. It simply found there was an infringement.

A. That may be true, but through the information that was presented to us every month in New York by the Patent Committee to the directors, which meeting I attended, unquestionably three-quarters of a cent must have been what they were talking about because that is the only figure I can remember until I look over again the White Company correspondence and read something about the meetings in New York, or various offices, and what not, that I had completely forgotten about.

* * * * *

(768) Q. (By Mr. Farley, continuing): Will you state whether or not, Mr. Dahl, after you made the settlement with the Gordon Form Lathe Company you received any monies from the General Motors Company with reference to the same matter? A. We did.

Q. I hand you a letter and ask you if you will state, if you know, what that is (handing document to witness)? A. Yes.

Q. And, just what is it, please? A. It is a letter from my assistant, Cooper, addressed to me, bearing my secretary's stamp of receiving it, and handing to me the release and sub-license under the Gordon and Redlin patent, No. 1,542,803, with a pencil notation from my secretary in reference to the payment of a sum of money from General Motors.

Mr. Farley: I ask this be marked as Defendant's Exhibit 232.

(The document above-referred to was thereupon marked Defendant's Exhibit 232 by the reporter.)

Mr. Farley: I will ask the reporter to mark this photostatic copy Exhibit 233.

(The document above-referred to was thereupon marked Defendant's Exhibit 233 by the reporter.)

Q. (By Mr. Farley, continuing): I show you another photostatic copy of a letter, and ask you if you know what this is (handing document to witness)? **(769)** A. I do.

Q. Is there anything particular in that letter which enables you to identify it? If so, will you state what it is. A. My name.

Q. You are now referring to Exhibit 232, and that is a photostatic copy of a letter of the White Motor Company, a departmental communication, written by Mr. Cooper, addressed to Mr. S. G. Crilley, Comptroller. Mr. Cooper there is the man whom you referred to earlier in your testimony as being an assistant of yours? A. That is correct.

Q. And, you are familiar with Mr. Cooper's signature? A. I am.

Q. And you recognize that as being his signature? A. It looks just like it.

Q. Briefly, will you state what that letter is and what it has to do with, and what your recollection is concerning it? A. It is a letter from my assistant to the comptroller requesting him to issue a check for $6,455.92, to the Gordon Form Lathe Company which has been okayed by me for payment.

Q. And would that have been a necessary part of your duties to okay a communication of that type? A. They wouldn't have paid it unless my name was on it.

Q. Now, I refer you again to Exhibit 232, and ask you to refer to the pencil notation there, and state what you know about that (handing document to witness)? A. This is a notation from my secretary advising that we had received this check for $3705.92 from the General Motors Corporation representing the difference between the—I don't **(770)** think that is right—representing the amount that was refunded to us by General Motors to apply against our net cost of settling this case, which made our cost the difference between $6455.92 and $3705.92, which was $2750.00, is my recollection.

Q. $2750.00 being the amount or the cost to the White Motor Company of this settlement? A. That is right.

Q. As far as the release and sub-license under the Gordon and Redlin patent referred to in this communication, I notice it is dated December 17, 1931, did you receive with that further release and sub-license from the General Motors Company? A. We did, or I did.

Mr. Farley: I offer first, Exhibits 232 and 233 in evidence.

Mr. Spohn: No objection.

The Master: They are admitted.

Q. (By Mr. Farley, continuing): Now, Mr. Dahl, when Mr. Howard Jones was produced as a witness at Cleveland, he gave some testimony to the effect that the White Motor Company had paid or were paying 10 cents a shaft royalty for splined shafts. Do you happen to know anything about that? A. That was a Gear Grinding settlement, I believe. We paid 12½ cents for past, and 10 cents for producing, it is my recollection.

Q. Will you state the facts under which that particular settlement was effected? A. Well, there had been a decision against the Studebaker, and it is my recollection it was 15 cents—I don't know enough **(771)** about the patent handling of it to know how 15 cents was arrived at. It is not a decision of the Court, but I guess it is determined by a hearing such as this, by a Master or something like that. In any event, I was up against 15 cents royalty on that thing, and I came over to see Banks of the Gear Grinding Company, and finding him a pretty tough Scotchman, having played golf with him three or four days, and not being able to do very much, I was pretty well satisfied to get any settlement under 15 cents, and my recollection is that I got 12½ for past and 10 cents for future, and I didn't make much in the golf games either.

Q. In so far as that payment of the White Company that was, too, a settlement, as I understand your testimony, which was effected by you; that is, the Gear Grinding? A. It was entirely effected by me, yes.

Q. And, in making that settlement was there any question of reasonable royalty as far as you were concerned? A. There wasn't, and if there had been I wouldn't have been handling it.

Q. As I understand your testimony, that was a settlement made after the Court of Appeals had rendered its decision in the case of Gear Grinding versus Studebaker in which they found a reasonable royalty in that particular case would be 15 cents a shaft? A. The decision.

Q. That is what the decision was? A. Yes, sir.

Q. And you had knowledge of that? A. Yes. I know it was the Studebaker case, but outside of that **(772)** I don't know what district it was in; circuit, or anything like that.

Mr. Farley: I think that is all. You may cross examine.

Mr. Spohn: Your Honor please, may we have just a little recess?

The Master: All right.

Mr. Spohn: Oh, did you have something, Mr. Farley?

Mr. Farley: That is all right. I have just one more question. I will ask it after the recess.

(A recess was thereupon taken.)

Mr. Farley: Just one more question.

Q. (By Mr. Farley, continuing): Do you know a man by the name of George Smith? A. Yes.

Q. And what was his capacity, or was he associated with the White Company at that time, and, if so, in what capacity? A. He was. In various capacities. His last title was vice-president in charge of production. And, previous to that he was technical assistant to the president, and next he was Works Manager, and finally he was the vice-president in charge of production.

* * * * *

---

(773) George W. Smith, Jr., was thereupon called as a witness on behalf of the Defendant herein, and having been first duly sworn, testified as follows:

Direct Examination by Mr. Farley.

Q. What is your name, please? A. George W. Smith, Jr.

Q. Where do you live, Mr. Smith? A. Greenwich, Connecticut.

Q. Were you ever connected with the White Motor Company? A. I was connected with the White Motor Company for 14 years in the period beginning with 1913 and ending in 1935.

Q. In what capacity were you employed in the White Motor Company around about December, 1929, and the early part of 1930? A. I was vice-president in charge of production.

Q. And, do you know Mr. Dahl who just testified? A. I do.

Q. And, what was his position with the White Motor Company at that time? A. He was both Secretary of the company and in charge of legal activities.

Q. Did you know anything particularly about this Gordon patent, and the charge of infringement against the White Company? A. I did.

Q. And, did you have anything to do with the settlement of that particular controversy? A. I did not.

Q. As far as a matter of that type was concerned, do you know, **(774)** in the position you were then occupying, under which official of the company such a matter would be referred to? A. I did know.

Q. And to whom would that matter be referred? A. To the Legal Department under Mr. Dahl.

Q. What was your particular knowledge of the situation? A. The amount of money that would be charged to the factory in the settlement of the case.

Q. And, there was a charge of that type made to you, or to your department? A. That is correct.

Q. Do you know Howard Jones? A. I do.

Q. And do you know in what capacity he worked for the company at that time? A. He was shop engineer reporting to Mr. Merton Blank, who in turn reported to me.

Q. And, do you know whether or not it would have been any part of Mr. Jones' duties to make decisions to settle or not to settle that particular charge of infringement? A. It would not have been part of his duties.

Mr. Farley: I think that is all. You may cross examine.

Mr. Spohn: No cross examination.

The Master: Just a minute, would it have been a part of his duties to advise as to the benefits received from the infringing machine?

A. It would have been.

The Master: Do you know whether he was consulted at that **(775)** time in connection with the settlement?

A. He was consulted by the factory as to the implications of this patent in litigation.

* * * * *

(879) Mr. Farley: If my memory serves me right, if your Honor please, at the conclusion of the sessions Monday night, I renewed the offer of Exhibits L and M. That was the Spencer Libby note book, and the copy that was made, which was marked Exhibit M. When that offer was made originally, after Libby's testimony, I understand the ruling was that the admission of them would be withheld until we had satisfactorily explained the destruction of the original records. I think we did satisfactorily explain that with the witness Klopsic, who testified that as new time sheets were made, the originals were taken back and destroyed.

The Master: I think there is sufficient testimony as to the destruction and also as to the date on which the exhibit was prepared, to make it admissible into evidence. There is some question, of course, as to the exact date of the time study from which it was taken, but I will admit the exhibit into evidence. Do you wish to register an objection?

Mr. Spohn: I do, if your Honor please. I understood at the time your Honor made the original ruling on it, that it was admitted solely for the purpose of detailing the witness' knowledge of the operations, and it was not admitted at all as any evidence on the minute costs set forth therein.

The Master: That is true. I think now, though, with the further proof as to the destruction of the original time studies that it is admissible for the other purpose as well.

(880) Mr. Spohn: I will just note an objection to that. I appreciate your Honor's ruling on that point.

The Master: Yes.

Mr. Spohn: My objection on the point of the minute costs being that the exhibit does not point out with sufficient definiteness, nor did the witness, the time study from which it was taken, if it was taken from a time study, so as to afford any benefit of evidentiary value in this proceedings.

The Master: The witness testified it was taken from the time study that was currently available to him as a foreman and during the year 1923 or '24.

Mr. Spohn: That is right. That was his testimony, your Honor.

The Master: And as foreman, it would be unlikely that he would have copied any time study which was not being used at the time that he was acting as foreman. There would not have been any purpose in doing so. The time study itself may have originally been made a number of years before under the system of the Ford Company, not to revise time studies except where there is a change in operations or a change in part or something which makes them suppose there is a necessity for a change in time that it takes to perform operations. I think that there is some question about the weight to be attached to the exhibit, but I will admit it in evidence.

Mr. Farley: I will call Mr. Aptekar.

---

(881) Albert Aptekar was thereupon called as a witness, and being first duly sworn, testified as follows:

Direct Examination by Mr. Farley.

Q. Where do you live, Mr. Aptekar? A. 15803 Normandy, Detroit.

Q. You are employed by the Ford Motor Company? A. Yes, sir.

Q. How long have you been employed by the Ford Motor Company? A. I have been there since March, 1915.

Q. To what department of the company were you assigned when you went there in March, 1915? A. The cam shaft department.

Q. Do you remember what method or machines the Ford Company were using for machining or roughing down the cams of the cam shafts when you went into the com-

pany? A. Yes, sir, I do. They used a Milwaukee mill, set up an attachment on it where they applied three shafts for cutting the cams at one time, with an index head on it.

Q. And that machine was one where the operator machined three shafts at one time? A. That is right.

Q. I show you an exhibit that has been introduced here, Defendant's Exhibit 145, pages 9 and 10 of the publication American Machinist, dated July 3, 1913, and call your attention to Fig. 3, and ask if that machine shown in that figure represents the machine you just testified about? A. That is right, this is the machine.

(882) Q. Now, how long did the company use that type of machine after you went in there? Was it continued to be used during your entire time in the cam shaft department, or did they use something else? A. No. We used this machine until we got our shapers in.

Q. Let me ask, how long were you in the cam shaft department, Mr. Aptekar? A. I was in the cam shaft department until 1934. I was out for a short period. I was across in Europe for the company.

Q. I show you a photograph, Defendant's Exhibit 53, reproduced in Volume III of the printed record at page 1037, and ask you what that machine is? A. That is the type of shaper used for machining the cams and cam shaft.

Q. If you looked at Defendant's Exhibit 53-B, which is a sketch,—you understand that sketch, the series of drawings? A. Yes, sir.

Q. What does that represent to you? A. Those are the slides for the tool holders that were used on the cam shaper.

Q. That shows the methods by means of which the cam shaft shaper removed the material? A. That is right.

Q. The first view at the left of the page, Fig. 1, shows the— A. —front view of the tool.

Q. The side view of the tool, is it? A. Yes, that is right.

Q. And the two views underneath show the manner in which the tool **(883)** traversed across—that is, the first view underneath shows the traverse of the work under the tool to perform the cutting stroke? A. That is right.

Q. And the other, with the arrow running in the opposite direction, shows what? A. The back stroke.

Q. And the side views to the right, which are numbered 2, 3, 4, 5, and 6, show what,—the manner in which the— A. That shows the manner in which the cam was travelling and the way it was cutting.

Q. The way the shaft rotated relatively to the tool as the tool covered the entire circumference or periphery of the shaft? A. Yes, sir.

Q. Now, let me ask, did you yourself personally ever run any of the shapers? A. Oh, I have at times, just probably a period of 15, 20 minutes.

Q. Under what occasions would you run the shapers? A. Just to try them out and see what they were like, and just get a little experience on them.

Q. Did you ever take any of the machines over and run it while the regular operator was at lunch or anything like that? A. I have on several occasions, yes.

Q. Do you have any present recollection as to what the output was in shafts per hour on the shapers on the machining of the Model T shafts? A. We figured around 30 an hour.

Q. What was the particular duties you had in the department at that **(884)** time, that is, during the machining and manufacture by the Ford Company of the Model T shafts, in the period when they were using the shapers? A. Well, at first I was on inspection there and later on I was put on production there. I was foreman of that section of the job, that is, all their machining, rough machining in the cam shaft department.

Q. How many shapers were they using, do you recall? A. Well, we started out with one shaper, and then we got another one later on, and I believe before we were through we had 13 shapers, if I am not mistaken.

Q. How long did the company continue to use the shapers? A. The shapers were used in Highland Park there. Let's see, that was in 1924, and then we moved to the River Rouge plant there, and from then on we have had some of those Walcott lathes.

Q. Do you have any particular knowledge concerning the efficiency or lack of efficiency of the shapers, from the standpoint of repairs or maintenance costs? I mean did you have very much difficulty with the shapers in keeping them running? A. No, we did not. At first we had a little trouble with our slides there, but we overcame

that by putting guards over that, to keep the chips from going into the slides. After that, those machines run right good.

Q. Were you in the department after the Walcott machines were in use? A. That is right.

Q. What could you say, if anything, concerning the type of work done by the two machines? I mean you were an inspector in the **(885)** department. Let me ask, was it a part of your duties as inspector to observe the contour of the cams and inspect the contour of the cams as they came from both the shapers and the Walcott machines? A. That is right.

Q. It was part of your duties? A. That is right.

Q. Well, now, referring to the two machines as the Ford Company used them on the Model T shafts, what would you say as to the type of work done by the machines from the standpoint of getting the proper contour and finish?

Mr. Spohn: Just a moment. I don't think the witness has stated when he became a foreman. He said he was first an inspector and later foreman.

A. In 1922, I should say that.

The Master: You were no longer an inspector after that?

A. That is right, although it is the duty of every foreman in the Ford plant there to kind of oversee the work that is done, that the quality of work is kept up, and so forth.

The Master: But you were no longer an inspector after that?

A. No, that is right. Now, I can explain this as to the quality of work produced by the shapers. I think they were much better, and we had less scrap out of those machines than we did out of the Walcott machines. For one reason, the construction of the machine was built so that they had actually five places where they held these shafts fast in there, and that in itself caused a better job. On the Walcott machines, where we had the steady rest about 6 inches from the base, hanging in the air there, we **(886)** found an awful lot of spring in those machines there, and this would be a consequence of the machine, the steady

rest going back and forth as the pressure of the tools would cut the stock off the cams.

The Master: What differences did you notice in these results, with respect to the contour of the cams?

A. Well, the contour of the cams was much better on the shapers, because the shaft itself travelled only two revolutions on a complete circuit of the shaft, that is, when it was finished cutting, while on the others the shaft travels quite fast, and at the point of the cam, it kind of jumps over the end of it. It used to dig in with the tool there. That caused a lot of trouble there. We had a lot of minor cams; they did not clean up on the finish end. Also we had to keep them on larger size of the Walcott machine because of that trouble there.

Q. When you say you had to keep them larger size— A. They raised our limits for the rough turn.

Q. You left more stock on for the finish grinding operation? A. Yes, sir.

Q. When you used the Walcott machines than you did with the shaper? A. That is right.

Q. Now, illustrate by reference to an actual shaft just what you mean by this trouble of the tool going around the point? Can you illustrate that? A. I believe I can. I was out to the Highland Park there Monday, and I brought in a shaft that was turned there last Friday, and I can show you the difference, yes. This is where our **(887)** trouble was, right there, the tool digs in there.

The Master: You are pointing to the point of—

A. It is the part in here, this part in here is lower than the actual contour of the cams. These are the parts in here where they did not use to clean up there, where we had trouble with our grinding, and also with polishing the cams. We had to have several men on polishing those cams, and also extra stock in there, grinding them. That is my handwriting. I picked these shafts up in Highland Park Monday.

Q. That shaft was introduced as Exhibit 234. You were referring to what cam, cam number 5, weren't you? A. I guess most of the cams are that way, but this seems to be the worst one there.

Q. That is number 5 cam? A. This is number 6 cam, I believe.

Q. All right. Are you familiar with the operation of the time sheets of the Ford Company that were made by the time study department? A. Yes, sir, I am.

Q. Before referring you, however, to the sheet, I am going to ask you what your recollection was of the various steps or operations performed on the camshaft before the camshafts were sent to the shapers for the shaping operation; and so that your testimony will be more readily understood, I will show you a camshaft which has been introduced in the trial below here, as Exhibit No. 29. First let me ask you, what particular camshaft that is, if you know? A. This is a Model B camshaft.

(888) Q. Now, will you explain to the Court just how —what about preparing that camshaft for the operation on the shaper? A. The first we did there in our department was to center both ends, and then we straightened the shaft, and then we turned this bearing in here, that is, the center bearing, and then we turned them between the cams. We nicked the cams first, we called it the re-set operation, I believe, and then we turned the end bearings, and then we straddled the flange, turned the gear post. Now, you are referring to the shapers?

Q. Yes. A. Then we put them in the shapers and turned the cams on that, shaped the cams.

Q. Was there any differences in the series of operations as performed on the cams prior to going to the shapers, and the series of operations performed on the cams before they were put on the Walcott machines? A. They were all identical with the exception we had the added operation there of straightening. We had to straighten those cams out before they went into the Walcott lathes.

Q. Did you use that operation or any similar operation before you sent the camshaft to the shapers? A. No, we did not straighten those, if that is what you mean.

The Master: You had a straightening operation at one point along the line.

A. Yes, we straightened those right after we centered those as a rough forging. When they are hot, they usually spring more or less. We had to straighten them right after we centered them, just trued up the forging, and here we just used a piece of **(889)** chalk on there to straighten them.

Q. Why did you have to have a straightening operation on the Walcott machine and not on the other? A. I would like to take you over to the exhibit. The way we had our shapers set up there, it helped straighten the shaft somewhat; and on this Walcott lathe we found that we would spring the shaft—we only had a steady rest in here—because it was not very rigid.

Q. You are pointing to the center bearing? A. The center bearing, yes, the steady rest in there.

The Master: In other words, your testimony is that the pressure of the tools in the shaper was—

A. Here is the whole thing. The way it is constructed, you have got this steady rest on the solid base of the machine there, and all the pressure was up against the face of that machine. There was nothing there to give. On the other hand, on the Walcott lathe, we had our steady rest in front here, and that was quite high off the base, if you recall the exhibit in Highland Park. That steady rest wobbled back and forth, as I explained before, and that would cause the cams to be crooked in here, and they would not clean up there. We had to straighten these after they were hardened.

Mr. Farley: Would it help your Honor if the witness explained that with reference to the model that we have here. I might say for the purpose of the record we have in the courtroom two wooden models, which have not yet been introduced in evidence, but which will be introduced as physical exhibits. One of them is marked Model T cam shaper. The (890) witness is going to use that. I will ask that for the purpose of the record this be marked for identification Exhibit No. 237.

Q. Now, let me first ask a few questions concerning this. Now, you testified, Mr. Aptekar, that you were familiar with the operation of these shapers and that you yourself operated them? A. That is right.

Q. Will you look at this wooden model before you and work the handle, and let me ask you first if you understand the model and the working of it? A. Well, the model is very similar to the machine we had in the plant.

Q. And does that model correctly represent the method of operation of the shaper? A. Yes, it does. Of course, we have not got the working parts there, but the model is a duplicate of the machines that we had in Highland Park.

Q. Insofar as the cutting tools are concerned and the relation of the cutting tools to the shaft, it is mounted in the middle, and shows the manner in which the table which carries the shaft functions with respect to the tools, is that correct? A. That is right.

Q. All right, now.

Mr. Farley: I make an offer of the exhibit as illustrative of the shapers used by the Ford Company on the Model T camshafts.

A. Now, here is the working condition of this machine here. We have got a solid base on this machine here. All your tool pressure is right up against the base. There is no give. No **(891)** steady rest whatsoever.

Q. Did you have a solid base of that general type on the machines as used by the company? A. Yes.

Q. Very well. A. You take on the Walcott machines, we had the steady rest right up in here, in the front end of it, which I don't exactly recall, whether it was eight inches or so from the base. All your pressure was from the back, forcing the shaft to the front of the machine there. That would cause our trouble in not holding our camshaft straight on the machine.

Q. Now, have you described why or how the shaper functioned so that you did not have to use the straightening operation on the shapers? A. Well, I do not believe I have. Now, as I said before, start with this solid base in here, your tool is up in top there pressing up against the base there. That would form a solid shaft in there. The other way you had only one steady rest on there, your two collets on the end there. Of course, that shaft being so small in diameter there would force the cams and the stock right out of there. In other words, when we were through with the shaft, maybe we would have .040 more stock on one side of the cam—that would be on center—than we would have on the other; where in this case on the shapers we had a solid base to work to, and the construction of the machine was much more solid all the way through.

Q. When you are referring to the shafts having .040 stock on one side, you were then referring to the operation on the Walcott **(892)** machine? A. That is right.

Q. Perhaps you could—I guess we have not got a shaft here now.

Mr. Farley: Does that answer your question specifically, your Honor?

The Master: Yes. Well, I will admit the exhibit in evidence as supplementing the witness' testimony.

Mr. Spohn: May we reserve an objection to that until cross examination?

The Master: All right.

Q. What did you call—did you have any particular symbol to designate the camshaft department? A. Department 410.

Q. When the Walcott machines were used in the department, as I understand your testimony, you were employed in the capacity of foreman of the department? A. That is right. I was shift foreman at the time.

Q. And part of your duties had to do with the operation of the camshaft machines? A. Yes, sir.

Q. Of the Walcott machines? A. Yes.

Q. What is your recollection, if you have any recollection, concerning the output of shafts per hour on the Model T shafts on the Walcott machines? A. On the Model T we used to run around 30 an hour.

Q. How about the maintenance on the Walcott machines, how did that compare with the maintenance on the shapers? **(893)** A. Well, we had very little difficulty with our shaper machines there, after we eliminated our troubles on the slides as I mentioned before. On the Walcott machines we had a lot of trouble with tools and springs breaking, and also the slides sticking, and I believe we kept about three or four men on each shift maintaining those machines, keeping them in repair.

Q. What is your recollection concerning the number of men you had to keep on a shift in order to keep the shapers in repair, maintenance men? A. We usually maintained a man on each shift there in the department there, and part of the time he worked on those machines.

Q. You were in the camshaft department, Mr. Aptekar, were you not, when production changed over from the Model T to the Model A shafts? A. Yes, I was.

Q. Do you know whether they had any difficulty at the outset of the Model A production, in using the Walcott machines on the Model A shafts? A. What do you mean by the outset?

Q. I mean at the very start of the Model A production, when you first started to use the machines? A. We had to change the form of the cam. We had difficulties in maintaining our sizes on those Walcott machines for the Model A, because they were held—the Model A job was much closer limits than we were held to on the Model T.

Q. Are you familiar with the operation of the Walcott machines? A. Yes, I am.

Q. Will you state whether or not, insofar as the contours of the (894) cams were concerned, the Model A as compared with the Model T, which was, if either—which was the more difficult to machine? A. Well, the Model A was much more difficult to machine, because they had a sharp point or a closer angle, and it was much harder to machine those.

Q. That is, on the Walcott machines? A. On the Walcott machines, yes.

Q. Could you state whether or not that same difficulty insofar as the change in contour of the cams, would affect the operation of the shapers on the Model A cam?

Mr. Spohn: Just a minute. There is no evidence in as yet that the shaper was used to turn out the Model A.

The Master: This is a question of opinion. Of course, he is asking the witness' opinion, assuming that the witness is an expert on this particular problem.

Mr. Spohn: If your Honor please, is the witness here as an expert on that, or just here as a foreman of a department, detailing what he saw and what he viewed.

The Master: So far he has been testifying to facts. He has not been asked for questions of opinion; but the witness, I suppose, can testify to facts and also to questions on which he is qualified to express an opinion.

Mr. Farley: I might state there, if your Honor please, that it is entirely a matter of fact for a skilled man, and the question was limited to the contour of the cams.

(The question was read.)

The Master: I think the question is purely one calling for the opinion of the witness. The testimony is that the **(895)** shaper was never used in the Model A shaft, and the witness cannot testify as a matter of fact as to how well the shaper actually did turn the Model A shafts as a consequence. He can only express his opinion as to the relative merits of the shaper and the Walcott machine, with respect to turning a cam with a sharper point.

Mr. Farley: Suppose, in view of this discussion, and to shorten matters up, I re-frame the question.

Q. Suppose, Mr. Aptekar, or assuming that the Model T camshaft, the contour of the cam of the Model T camshaft had been made the same as the contour of the Model A shaft—do you understand what I mean? A. Yes, sir.

Q. Would that in any way have affected the operation of the shaper in getting the proper shape as it did affect the operation of the Walcott machines? Do you understand my question? A. Yes, I understand it. To my opinion, I don't think it would make any difference, because of the construction of the machine and the tools that we were using on the job, and the form of the cam would not make a bit of difference.

Q. On the shaper? A. Yes.

Q. And it did make a difference on the Walcott? A. Yes, sir.

The Master: Do you know when the straightening operation was actually introduced as an additional operation on turning the cams in the Walcott machine?

A. It was introduced at first there when we had a lot of trouble **(896)** in cleaning up our cams; we were forced to add another operation to it, which was the straightening operation, when we started those Walcott machines.

The Master: Do you know whether there was any discussion of the possibility of providing firmer supports or a stronger steady rest as a means of taking care of that, rather than providing the additional straightening operation?

A. Not that I know of.

Q. What is your recollection, Mr. Aptekar, concerning the production of the Model A camshafts on an hourly output per hour on the Walcott machines? A. Well, we figured around 25 an hour on the Walcott machines per machine, 50 per man; we used to have one man run two machines.

Q. Do you have any way of fixing that as a matter of recollection? Let me ask you this: As foreman of the department there, running those machines, how did you ordinarily do with respect to your operations, that is, you have a certain number of men performing, let us say, the recess between the cams? A. Yes.

Q. And a certain number of men performing the operation of the Walcott machines. Just how did you, as foreman of the department, check this matter of getting out your daily production? Do you go there and make some sort of record for each hour as to what each man is doing, or do you count on a lump sum production per day for each man? A. When we start a new job of any kind, we usually have checkers to check each operation there. In fact, one operator checks the other man, as to how much he produces every hour, and we (897) keep a record of that in the department in each shift.

Q. Now, after you get your department running in regular order and producing the same job for some time, what do you do? Just figure on what you are going to get per man per day, or per shift? A. We have a time study, a time study department in the Ford plant there, and they give us an estimated time on what should be produced on each operation there, and we usually have to keep up to that in order to keep our job there, more than anything else.

The Master: What kind of check do you make to determine whether you are living up to the time schedule?

A. We have checkers every so often there, and they take stock off of one machine, if it is not used on conveyors; if it is on conveyors we just check it at different points. For instance, we will have a section there with four or five operations on it. We know during the eight hours we have to produce so much on that section there. If we don't produce that, naturally the next section will be short

of stock there. In the Model T days, we did not have the conveyor system as much as we have of late here, and in those days we used to have checkers carry the stock from one machine to the other, in order to get their proper amount of production out for each machine.

The Master: What kind of records do these checkers keep?

A. Well, we have boards there every so often, a blackboard, and we mark it up on the blackboard with chalk, as to the amount of production produced in each operation.

The Master: Were there any permanent records kept?

A. Well, I will tell you, each foreman used to have to turn a **(898)** report in to the general foreman on the day shift there, on how much they produced on each operation or each section, in fact. Being this department was quite a large department there, we have a lot of operations on the cam shaft, and we turned those records in daily to the general foreman.

Q. What sort of record is that—a permanent record? A. No, those are destroyed every, probably, couple of days.

Q. I think it would be interesting to the Court to tell a little bit more about this blackboard proposition. Each of the departments has a blackboard about the size of the Master's desk? A. Just about that size.

Q. And at the top of that board, or somewheres on the board, you have a figure given of what the schedule of production is per day, is that right—you have the figure which you are supposed to be shooting at in the department, whether it is 5,000 or 6,000 or something like that? A. I will describe it as a board, if you don't mind. This board is usually put on a stand. We have that in every section, every so often in the department there; and then the hourly production, for instance, like would be 1, 2, 3, 4, 5, up to 8 hours, and then the three shifts all separated, all different sections. Those boards, on them we put the hourly production as they are produced in each section of the department. At the end of the day—we keep those for 24 hours, and after 24 hours we erase that, and leave on the total production produced in the whole department there, on the board there. There is no record, as far as we are

concerned, but there is a record noted in the superintendent's office; we turn in a record every **(899)** day on each shift how much we produce.

The Master: How many operations constitute a section of the department?

A. That all depends. In this cam shaft department particularly we would have, I would say, five sections.

The Master: What would be the operations included in the second section, including the rough turning operation?

A. This includes in one section there all up to the heat treat department, in those days of the Model T and Model A cam shaft.

Q. The real purpose of the board there, you foremen, I assume, keep a pretty close watch on the board, and let us say you had a schedule of production of, well, to make it easy to talk about, we will say four thousand a day? A. That is right.

Q. That would mean that, in order to meet that production, you got to have your department turning out a certain number of shafts every hour? A. Yes, sir.

Q. Suppose if your department starts to fall down, then your main shop foreman would probably get after you as the shift foreman on that particular section, and get you to pep things up, is that the way it runs? A. The general foreman usually comes in and finds out where your weak points are, when he sees the board is not up to date. In other words, if you don't produce 500 an hour, as you must do to get 4,000 a day. If you don't produce that 500 an hour, then he wants to know where your troubles are. He probably would come in and if we need any help in there, we would get it. **(900)** If there is any trouble, we two get together on it and straighten matters up.

Q. By the way, do you know a man by the name of Ralph Myers? A. I do. He was my general foreman at the time I worked in the cam shaft department.

Q. If your section was not keeping hitting on the ball, we will say, why, Ralph Myers would probably be the one who would come after you, get after you? A. That is right.

Q. Concerning this straightening operation you are talking about, did you have to use this straightening operation on the Model A shaft when you turned them on the Walcott machines? A. Yes, we did.

Q. Suppose you would use the shapers for turning the Model A shafts would the straightening operation, in your opinion, have been necessary?

Mr. Spohn: If your Honor please, that is pretty hypothetical, in view of the present state of the record.

Mr. Farley: It is a matter of opinion here. The witness has testified and given reasons for the straightening operation.

The Master: I will let him answer the question.

A. Why, it would not be necessary to straighten those.

* * * * *

(910) Q. As I understand your testimony, you were working in the capacity of **(911)** foreman when you were over at the Highland Park plant, and you also had the same duties as foreman when you were over there—or was it of inspector? A. No, I was foreman after two years, before I came to the Rouge plant.

Q. Can you state whether or not the company provided the foremen of the Highland Park with any particular stationery or other material for the purpose of keeping records for their own information? A. Yes, they have. Every foreman in the Highland Park plant was furnished with a little book there about this big, it had a brown cover on it, in which we usually kept our records of our production and our time required for each operation, as a rule. I had one of those books myself. I believe I destroyed it some years ago, which it was not necessary for me to use any more.

Q. Do you know a man by the name of Spencer Libby? A. Yes, I do.

Q. I am going to show you a book and ask you if that is in— A. This is the type of book that we were all furnished in Highland Park.

The Master: That is Exhibit No.—?

Mr. Farley: Counsel has just shown the witness Exhibit L.

Q. I will ask you to refer to pages L-1, that are marked L-1 in that book, and state what the information contained on those pages means to you, if anything? A. Well, this looks like a time study copy of some kind there, on the cam shaft job.

Q. Let me ask you this, Mr. Aptekar, did you ever see that particular **(912)** book before? A. No, I did not.

Q. Do you recognize any of the operations listed here as having—state whether or not you recognize them, or what you do recognize about that? A. Well, this is a duplicate of our operation sheets that were on the Model T camshaft.

Q. How do you know that? A. Well, I can tell by the operation layout in here.

Q. How do you know it was the Model T cam shaft? A. I believe that is the time that—

Q. Is there anything in any of those operations that enables you to identify that as a Model T time study? I will ask you to refer to operation 12 there. A. Shape cams, operation 12.

Q. Was an operation of shape cams ever used in the Model A? A. No, we did not use it in the Model A.

Q. Does that in any way help you to identify that? A. That is right. I did not notice this operation 12 on here, which calls for shape cams, which we did not use on the Model A.

The Master: Did you ever keep time study records in a note book that was furnished to you?

A. Yes, I did.

The Master: Do you know whether it was common practice for all shop foremen to do that?

A. Most of them did, yes, for our own use there, because we were required to produce a certain amount of shafts on each operation. **(913)** If you did not know just what you had to produce there, it was kind of hard,—they would come in and ask you occasionally just what you had to do on a certain operation, and we had to be pretty well lined up on that. In fact, I had one of these books myself some time ago, and I burned it up since I had no use for it. I have been out of the cam shaft job now four years, in fact, this is the fifth year, and since I had no use for it I burned it up.

Q. As a matter of fact, later on, did not the company over at the River Rouge plant discontinue this system and take all these books away from the foremen? A. Yes. We have a fellow by the name of Mr. Harvey in the Rouge plant there, and he objected to all the foremen carrying their books around, in fact, a lot of other records were destroyed; we were not supposed to have any records around the desk there, any papers or anything; they were all destroyed; done away with all records.

* * * * *

(914) Cross Examination by Mr. Michael.

Q. Mr. Aptekar, are there any of these shapers in existence now? A. Not that I know of, no.

Q. I think on your direct examination you referred to this Exhibit 29 in describing the operations prior to the turning or shaving. What was the first operation on the shaft? A. We turned the center bearing.

Q. Is that the first operation? A. No, pardon me. The first operation was to center, center both ends.

Q. Then what? A. Then we straightened those with chalk.

Q. How was that straightening done? A. That was put in between centers, and we used to hold a piece of chalk up against there between the cams, just to rough straighten that as a forging.

Q. Then you pulled a press or something down? A. We had a hand press, a Springfield 00 hand press.

Q. Is that the same straightening operation done today? A. We are not using this type of cam shaft today.

Q. Well, was it done when you were? A. On the first operation at all times on forgings. Now, we are using a cast alloy cam shaft, which does not require any straightening.

Q. But getting back to these earlier operations, you used that straightening operation on the form miller and on the shaper and on the Walcott machines? **(915)** A. That is right.

Q. And then your next operation was to turn the center bearing? A. Turn the center bearing, yes.

Q. Then what happened? Was the shaft still straight then? A. Yes.

Q. Then what did you do? A. Then we nicked—recess, what we called it—we would nick that between the cams there, to mark for the spacing of the cam.

Q. Did that make the cams crooked? A. It did not.

Q. What was the next operation? A. The next operation, we turned the end bearing.

Q. Did that make it crooked? A. Pardon me. We turned in between the cams after the recess, and then we turned the end bearings, and then we turned the flange, and the gear post.

Q. Did any of those operations make the shaft crooked? A. No, they did not.

Q. What was the next step? A. The next operation, we put it in the shaper.

Q. Then the shaft was straight when it went in the shaper? A. It was, yes, it was straight enough that the cams would clean up on the shaper. On account of the construction of the machine, that held that shaft solid in there, and it was straight enough to do our operation in of shaping the cams.

Q. Did you do the same operation that you just described when you used the Walcott machines? **(916)** A. All operations, with the exception of the added one, we added another operation of straightening.

Q. Wasn't the shaft straight when it got to the Walcott machines without straightening? A. It was straight enough, provided you could hold the shaft in there solid enough so you could turn the cam; but holding it on each shaft and just one steady rest on the center there, the shaft would spring in the operation.

Q. Even though it was straight when you put it in there? A. Yes.

Q. How would straightening keep the shaft straight in the machine, if it was straight without straightening? A. Here is what happened. If this shaft here was actually sprung in the Walcott machine, and they had to be very straight there, in order to get them in there—

Q. Are you drawing a distinction between straight and very straight? A. Well, there is such a thing, yes. You can bend the shaft here to a certain extent so that it won't work in a machine.

Q. What bends it? A. The various operations would bend the shaft in the previous operation.

Q. I thought we just went through these operations step by step? A. Yes.

Q. With the shaper, and you said the shaft was straight when it went into the shaper? A. I would not say it was exactly straight. It would be bent somewhat, but not enough to do any damage in the following operations.

Q. When it went into the Walcott machine, it was just as straight **(917)** as when it went into—it would have been just as straight going into the Walcott machine without the straightening operation as it was going into the shaper without the straightening operation? A. That is right. But, now, suppose this shaft was running, say, 15 thousandths of an inch; this shaft was not supported in between these points in here; then in turning this here at high speed, there, that would offset the cam, with this other part there, where we would not do this on the shapers. We would hold the shaft in this part in here, and that automatically straightened the shaft right there.

Q. If the shaft was crooked when it went into the shaper, would it be crooked when it came out of the shaper? A. No, it would be somewhat straighter.

Q. What do you mean by somewhat straighter? A. Because of holding this shaft in between the cams.

Q. Would that shaping operation actually straighten the shaft, the body of the shaft? A. It would help it some, yes.

Q. All it could do would be to spring it? A. That is what happens to any crooked shaft, that springs; that is what happened in the shaper.

Q. If it is crooked when it goes into the shaper, the shaper springs it straight? A. It does in a way, yes, and it also turns it concentric with the cams wherever you hold it.

Q. Do you want to change your testimony, then, that the shaft, when it went into the shaper, was a bit crooked, or was it straight? **(918)** A. Well, it was somewhat crooked, I would say yes.

Q. And when it went into the Melling machine, if it was not straightened, it would be crooked, to some extent? A. It would be more crooked.

Q. When it went into the machine? A. No, it would be about the same shape, naturally, because the operation

was identically the same, but we would have to straighten it a little more closely because you had no support—you had no way of holding the shaft in the proper position there, to hold it concentric with the cams there. This was up in the air between this point in here and the collets on the end there. This shaft was all—

The Master: You mean between the center bearing and the collets on the end?

A. Yes, the center bearing and the end bearing and the collets. I was referring to the gear post end.

Q. If the Walcott machine did not hold the shaft steady enough without the straightening operation, why did not you put on two supports intermediate to the center bearing? A. That was out of my jurisdiction. I did not have anything to do with that.

Q. In your opinion, would that have corrected the matter? A. We never tried it. I don't know.

Q. You are sure the shapers had five supports? A. Yes.

Q. Is this a photograph of the shaper at page 1037 of the record? A. Yes, it is.

Q. That machine is shown there as being operated—
(919) A. Yes.

Q. —by an operator, and the work in place? A. Yes.

Q. How many supports do you see for the shaft? A. I see three supports in that one.

Q. Is that contrary to your understanding of the machine? A. Well, I don't know why they have not got those—the machines were not designed, and we had those five supports in there.

Q. There were drawings of the shaper introduced in evidence down below as Exhibit 63. Do you recognize this drawing as being a drawing of the shaper? A. Yes, it is similar to the shaper we used out there.

Q. How many supports do you see in that? A. I only see three supports on that one.

Q. Just one center bearing? A. That is right. Is this a photostatic copy of our shaper there, of our blueprints there?

Q. Yes. Mr. Farley has the prints that were actually introduced. These are photostatic copies of the prints, Exhibit 63.

The Master: With these additional supports that are not shown on these drawings, this photograph that was just shown to you, did you grind or smooth the bearing immediately above the supports so that the work piece would rest smoothly on the supports?

A. Yes, they were ground.

Q. Which parts were ground? A. I did not quite get that, your Honor.

The Master: Well, I was asking—

(920) A. If this was ground here?

The Master: You ground the center bearing, did you not?

A. No, we did not grind it. Just rough turned it.

The Master: Just turned it?

A. Just turned it, yes.

The Master: Did you have the same sort of operation immediately above the other two supports?

A. No, it was the same operation. We turned this and we turned the bearing. That was supported here and supported there. Of course, we did not have this eccentric on the cam on the Model A or the Model T shaft.

Q. I show you pencil sketch that I mark for identification as Exhibit QQ, in which I have attempted to show, very roughly, the side elevation of a cam shaft, the wedge shape marks at the end of it being the centers on which it is supported, and this wedge shape mark in the center being the steady rest? A. Is this the shaper?

Q. This is the shaper. A. We did not use centers in the shaper. There were collets there.

Q. Well, we will let that represent collets then. A. That makes a lot of difference there. You are holding that so much closer, making this a collet in here. The collet held just about this far here. This gear post end there, that was held right on the gear post there. And I should put a flange in there, shouldn't I? And the collets come right up to here, like that.

Q. Will you mark those two things, "collets," these V-shaped figures that are just above the cam shaft are supposed to represent (921) tools. I will mark two of them

with the letter T. Now, let us assume when you had this shaft in the machine, when you put this shaft into the machine, it is crooked, either between the one end bearing and the center bearing, or between the end bearings, in other words, if it is crooked from end bearing to end bearing, the center bearing would be out of line? A. That is right.

Q. And you start your shaping operation; now, the shaft in the latter event would be bowed upwardly, we will say, when it is put into the collets? A. Yes. That is exaggerating it a lot.

Q. Well, it might happen, might it not? A. Well, I don't see why it would bend that much to cut a bow in it.

Q. If it is bent at all, it would have a bow in it somewhere? A. We are talking in thousandths of an inch.

Q. Well, it would be a thousandth of an inch bow? A. That is right.

Q. It never bowed any more than that? A. Oh, yes.

Q. Well, what would be the maximum bow? A. I could not tell you offhand just what it would be.

Q. Would it be as much as 20 thousandths? A. In some occasions I would say yes.

Q. Would that be common or very uncommon? A. I would say it would be quite common to have them run out ten to 15 thousandths.

Q. Would it ever vary as much as 50 thousandths? **(922)** A. Not that I know of.

Q. 30 thousandths? A. Sometimes it would, yes.

Q. Well, in that event, or in any event, the variation of crookedness from one end bearing to another, the bow would be sufficient—or tell me first, what would you do with the center bearing,—was that adjustable in any way? A. No, there was a solid rest there, you could not adjust that.

Q. So if the shaft was bowed from end to end, there would be a time when the center bearing would not even rest on center? A. That is right.

Q. If the tools now in operation were fed from—well, I don't think the tools moved, did they—they did not traverse the work—the work moved on the tools? A. The tools were solid; just travelled up and down with the form of the cam.

Q. The tools, the work, then, in the position of the tools here, would be in a position to take the first cut, is that right? A. Yes.

Q. Or, take a cut, and in taking a cut, the work would be moved to the left under the tools? A. Yes.

Q. When this bow or when the crookedness of the shaft or the bow in the shaft was in the uppermost position, that is, the shaft was bowed upwards this 10, 20 or 30 thousandths, and came back in this position, to take a cut, the tools in engaging the work, would what—force the shaft down against the support? A. Under pressure on all tools coming down, at the same time this **(923)** shaft would straighten up, resting on the lower steady rest of the machine.

Q. Now, how quickly would it straighten up? A. As soon as the pressure would force the shaft down with the tools.

Q. When would that be? A. The shaft is moving to the left against the—

Q. —the tools, is it not? A. Yes.

Q. It would not force it down the instant it hit the tools? A. Naturally, as soon as the tools would hit the shaft on top there, it would force it down.

Q. Would it force it down the instant the tools hit the edge of the cam? A. I believe it would.

Q. Do you know? A. Well, it is so far back I do not really recall, but my experience tells me that as soon as your tools will strike this shaft there, it would force that shaft down, being such a length there and the diameter being small, three-quarters of an inch, that would force the shaft right down against the steady rest of the shaper.

The Master: You cannot tell by actual experience; the bow is so small you cannot detect it with your eye, so you are simply inferring that maybe what would happen, the result?

A. The result is that the tools would force the shaft down, regardless of whatever springing you would have in the shaft, whether it would be 30 thousandths or one thousandth. Your **(924)** cam shaft would always rest on the steady rest firm as soon as your tools would touch the shaft. There is a long span in between those two collets there. If this thing was up in the air and your tools come down here, they will force on there. We were taking quite a bit of stock off of there, I believe it was a sixteenth of an inch, if I am not mistaken, from the rough forging to the size of the

cam. Your pressure on all tools hitting that at the same time, that would force it right down and actually keep it firm and straight while in operation.

Q. But it could not force—the tools could not force the shaft down except while they were cutting? A. As soon as the tools strike the shaft, it would force it down.

Q. They were cutting as soon as they struck? A. You can bend the shaft down like this with your hand pressure, and probably bend it four or five thousandths.

Q. Would not there be any irregularity in the first cutting action of those tools on the cams where the shaft is receding? A. I don't think so.

The Master: Until the tools got on top of the particular cam being cut, it would not force it down, you would first have to get the tools on the cam?

A. That is right, but as soon as the pressure of the tools would strike the shaft, that would force it right down there, because you have an even amount and all tools come down at the same time.

The Master: Wouldn't it make a little nick on it until the tools actually got on top of the cam?

A. It might make an impression there, but it would not be much of (925) a nick in there. That would apply to any cutting tool. You can find this same thing in here, where the lathe is taking a cut in there, but after it gets to the top in there, it presses it right down against the steady rest there.

Q. If you had only three supports for the shaft, as I have shown in this sketch, Exhibit QQ, the tools coming down on these cams intermediate to the bearings, would cause some depression in the shaft, would they not, causing some receding of the shaft or springing of it down? A. As soon as the tools would touch the cam shaft, yes.

Mr. Michael: I will offer this sketch in evidence as Exhibit QQ.

Mr. Farley: No objection.

The Master: It is admitted.

Q. Mr. Aptekar, I understood you to say on direct that these shapers took two cuts? A. I did not say that.

Q. Well, I understood you to say that. They took only one cut? A. I did not say that.

Q. Well, what did you say? A. Nobody asked me that question.

Q. What is your answer to that? A. There is two cuts—the machine was designed to make two revolutions, but there was only one cut there.

Q. What did you use the second revolution for? A. The machine was set so as to make two revolutions to complete the cycle, but there was actually one cut on there.

Q. I wish you would explain that for me. In one revolution the **(926)** tools would traverse the entire surface of the cams, wouldn't they, but the entire surface of the cam? A. Well, they would, but they would not finish it.

Q. Then what did you do,—go around and take another cut without adjusting the tools? A. No. Put it the other way now. This work here made two revolutions to complete the cycle. Now, on the Walcott machines, I don't know how many revolutions it made, but it ran around 220 r.p.m., I believe.

Q. Let us just stick to the shaper a minute. Describe to me what you mean by a cycle? A. The cycle means from the time—supposing this cam was upwards when it started cutting; then it made one complete revolution and continued on around there until it came the second time around. This means one cycle of the machine, which made two revolutions in the cutting of the cams.

Q. What happened to the first revolution of the work? A. It would cut the cam naturally.

Q. And what would happen during the second revolution? A. It continued cutting it around there.

Q. Well, it did it then in two cuts? A. No, it is actually one cut there.

The Master: Assume you had one complete revolution of the cam shaft up now, what would be the state of the cam?

A. The cams would be oversize, they would not be completed yet.

The Master: They would be cut smoothly all the way around, they would not have gaps or spaces which had not been cut?

A. No. You can stop your shaper at any angle at all or any time. **(927)** Suppose we make just one quarter of a

turn, it would cut all these cams up on top here. Then if you continue your cycle around there for two revolutions, that would complete the job, and make it down to size.

Q. Did you say you took off about a sixteenth of an inch? A. I don't know exactly what our forgings were of late there.

Q. I am speaking now of the shaper. I understood you to say you took off a sixteenth of an inch? A. I believe about a sixteenth of an inch.

Q. Then on the first revolution of the shaft with the machine operating, you would take off a sixteenth of an inch of metal all around off each cam? A. I would not say quite a sixteenth of an inch, on account of a certain amount of back pressure on your tools and one thing and another; it took some more stock off the second turn, which completed the cycle.

The Master: Was there any re-setting of the tools for the second turn?

A. No, there was not any. We just—we would just bring the head right down and leave it there until it made the complete cycle there, and then they would shut it off automatically with a switch, an automatic switch on it.

Q. The first cut was a heavy cut, there would be no adjustment of the tool, all you did on the second cut was to clean up? A. Evidently did, but I would not call this as a second cut. It is the second revolution of the shaft.

Q. But the tools were working, and were they removing metal? A. Yes, they did, yes.

(928) Q. Evenly all around or just in high spots? A. No, evenly all around.

Q. What was the pressure of the tools on the work on that second cut compared with the first? A. There would be naturally less pressure on the second cut than the first.

Q. Tremendously less? A. I don't know just how much.

Q. Would it be greatly less? A. There is no way of checking it. My imagination is there would be less pressure on the second revolution.

Q. There is a way of checking it? A. Yes.

Q. It is a sixteenth of an inch against maybe a few thousandths? A. Yes, that is what I say.

Q. Then if the shaft was crooked when it went into the shaper— A. It automatically will straighten there; all this pressure of taking this stock off there, and pressing up against the solid bed of the machine like this here, it would automatically straighten the shaft some. On the second cut it would naturally clean up and make a smooth job all the way around.

Q. Is it your position that a crooked shaft going into the shaper would come out straight? A. It would, to some extent, it would straighten itself in the shaper.

The Master: When you straighten the shaft in a press, you press it in the other direction, you get a bow opposite to the one you have in the crooked shaft, and then it springs back to **(929)** normal?

A. Yes.

The Master: You would not get that effect with your cam shaft shaper, because the most your pressure would do would be to hold the cam shaft absolutely straight while it was being cut?

A. Yes.

The Master: And then the tendency would be for it to spring back to the bow shape again?

A. It would naturally do that, yes. It was straight while it was cutting. That is the object of the steady rest and the construction of that machine there.

The Master: It would be just about as crooked when you pulled it out as when you put it in?

A. Yes, but you see between the cams—

The Master: You mean while it was shaping, it was straight, because of the pressure of the tools on the cams, but when you pulled it out—

A. It was just as crooked. We did not care anything about that, because they went into the fire after that operation, and they would spring anyways in there, 1800 degrees heat there; they would spring anyways.

Q. Under this first cut, the shaft would spring quite a bit? A. It would straighten itself. It would not spring. It would spring back to the natural shape, because of the steady rest on the bottom, on the solid base.

Q. All right, then, on the second cut, when it had sprung back to natural shape, you would take a lot of metal off one side of the **(930)** cam and none off another, and so on around? A. Not necessarily, no.

Q. How could you avoid it? A. Because you had pressure under your second revolution of your shaft anyway.

Q. You had what? A. You had a certain amount of pressure on there anyway.

Q. Yes, very light pressure. Can you tell me how much pressure? A. I never measured it.

Q. But you could judge pretty accurately? A. I have not measured it there, but through my experience I find that the second cut on those shapers were quite a bit of pressure, although there was not as much as on the first revolution on there, on the shaft.

Q. In the Walcott machines, the steady rest at the center of the machine rested on the bed of the machine? A. Yes, but it was not right direct on the bed of the machine.

Q. It was not on the bed of the machine? A. It was held down by a bolt in the center, and the steady rest was up about, I don't recall whether it was five or six inches off the bed of the machine, and the pressure—your tools were in the back of the machine, instead of being on top, and of course, that naturally had to sway in the steady rest, because all that was holding it was holding on the base of that machine there.

Q. But your steady rest was directly opposed to the tool pressure? A. Yes.

The Master: Is your tool pressure constant or always **(931)** changing?

A. It was just opposite of what your tools are cutting. The only thing we did not have sufficient pressure on that steady rest there, because we did not press down on it, we pressed sideways, and that caused a certain amount of give in the steady rest there, which caused the shaft to be crooked while it was turned.

The Master: Your tools are constantly changing their position in the Walcott machine?

A. But the pressure remains the same.

The Master: In the same direction?

A. Yes, they do. They do not go around the shaft. The tools are stationary. They go up and down some, but they still remain—the pressure is on the same side.

Mr. Farley: May we refer to this model?

A. You see, your tool pressure would be always—it may go up and down a little ways, but your pressure, your shaft will spring out this way, regardless of what position your tools are in.

Mr. Farley: I am referring now to Defendant's Exhibit 140, physical model Walcott machine, which was used at the trial before Judge Tuttle.

The Master: The pressure will always be in the same general direction, but there will be some alterations in it as the tool changes positions.

A. Some, but not very much. You will have to turn it faster than that, Mr. Farley.

Mr. Farley: (Demonstrating.) I cannot turn this 220 r.p.m.

(932) Mr. Michael: Your Honor, that is all I have at the present, but I would like to reserve the right to recall the witness for further cross examination a little later, if I find it necessary. There are certain things we would like to check in the record.

Mr. Farley: What is that?

The Master: He says he wants to recall the witness at a later time.

Mr. Farley: That is all right. Did you want to say something?

The Witness: This photostatic copy that was presented to me by this gentleman here,—I don't know your name.

Mr. Michael: Michael.

The Witness: You showed me a print of the shaper showing only three steady rests on there, and also a photograph. Now, I don't know what date this print was made, but we showed three steady rests in there besides the collets.

The Master: Do you have a very definite recollection on that point, that there were five places at which the shaft was resting?

A. Yes. In one particular occasion I remember we had all machines equipped with five supports there, three steady rests and two collets.

The Master: What time did you say you went into the cam shaft department?

A. In 1915.

The Master: At that time they were using the milling machine. Do you recall the period there when they were using **(933)** machines with only one steady rest?

A. No, I don't recall that. They might have taken those steady rests off for, probably, easier operation in handling, but as I recall it we had three steady rests.

The Master: Your recollection is quite positive on that point?

A. Yes, I know we had three steady rests on there. It is possible they have removed those for particular reasons of handling, because, as I remember right, there was little difficulties in getting the shaft in and out of the machine there, due to the cams striking those steady rests. It is possible they may have moved them out later on. I don't quite recall that. I was under the impression we had three steady rests on those machines. In fact, Mr. Farley's blueprints show that, too.

Mr. Michael: Well, what is that blueprint?

Mr. Farley: One I intended to introduce later, this particular one he is referring to is—

Mr. Michael: It is not an exhibit in the case?

Mr. Farley: It is not an exhibit in the case. It has the date of 11-17-13. I will prove this up by a later witness. I will have this marked for identification at this time. There are just some notations of names that I scribbled on there while I was using the telephone. This will be Exhibit 242.

Mr. Michael: What was the date on there, Mr. Farley, 11-17-13?

The Master: Any further questions?

Mr. Michael: Not at this time.

(934) RE-DIRECT EXAMINATION by Mr. Farley.

Q. Only one point. You were questioned at some length by Mr. Michael concerning one or two cuts on the shaper. I think you draw a distinction between a machine in which there is a definite mechanism for moving the tools in for a second cut as in the Walcott machine, and the case of your shapers where you just let the tools—the shaft run around a second time, without changing the position of the tools? A. There was no fitting attachment of any kind or change of tool sizes as far as that is concerned.

Q. That is what you had in mind when you said the shaper did not take two cuts? A. That is right.

Q. That is all.

WILLIAM D. HUNT was called as a witness, and being first duly sworn, testified as follows:

DIRECT EXAMINATION by Mr. Farley.

Q. Where do you live, Mr. Hunt? A. Jackson, Michigan.

Q. Were you at any time ever connected with the Walcott Machine Company or the Walcott Lathe Company or whatever the name was? A. Yes, sir.

Q. And when were you connected with them? A. I think I went to work there in 1922.

Q. In what capacity were you employed by the Walcott? **(935)** A. In the engineering department.

Q. Are you familiar with a certain type of machine that was known as the Melling cam turning lathe? A. Yes, sir.

Q. Did you, in your work in the Walcott Machine Company, have anything to do with that particular machine? A. Yes, I was in charge of the designing of that machine.

Q. Did you have anything at all to do with the designing of certain Melling cam turning lathes that were sold by the Walcott Company to the Ford Motor Company? A. Yes, sir.

Q. Do you know when those machines were sold by Walcott to Ford? A. I think I can get the date right off the blueprints. That would probably be better.

Q. Well, what did you have to do with those particular machines? A. My position was to lay out what we call the

set-up on each different machine as it was sold to the different companies, the set-up had to be made for that particular shaft, to fit that machine.

Q. That means that each time you sold a machine you had to make changes in the detail construction of the machine to fit the particular shaft for which it was designed or which it was going to turn? A. Such as the collets and your steady rests, and, of course, about 80 percent of the machine was standard.

Q. Now, will you state whether or not that is the ordinary practice of engineering and machine tool designing, to make the necessary changes that might be required in a machine, in view of the **(936)** machine turning different products or different shafts? A. It is absolutely necessary in order to turn the different shafts.

Q. Is that regular practice, regular everyday work? A. Yes, it is regular practice.

Q. Now, were you familiar with any other machines sold by the Walcott Company, to companies other than the Ford Motor Company, of these Melling cam turning lathes? A. Yes, sir.

Q. What was the difference, if any, between the machines sold to the Ford Company and those sold to other companies? A. Well, the first machine, I believe, that we sold to the Ford Company, there was no difference, so far as the general—that was the tractor job, I think that was the first machine; we had standard gears on it. Then, when we sold them to Ford's, they wanted to see, if possible, to speed the machines up, and we put a faster feed gear on the machine.

Q. Speed gear or feed gear? A. Feed gear. As far as the speed is concerned, that was governed largely by the sprockets from the motor to the clutch, and with all different machines we have quite a variety of sprockets.

* * * * *

(949) Q. There has been some testimony here, Mr. Hunt, generally to the effect that as those machines—well, let us take it step by step, that, let us say, after six months after the machines were in the Ford Company, and during which time our records show that they produced approximately a million shafts, that they would not then be operating efficiently after the six months period of use, it being

suggested that perhaps the company had not learned how to use the machines by that time. What would you have to say about that?

Mr. Spohn: If you know.

Q. If you have any opinion on the matter.

Mr. Spohn: Just a minute. Will you read that question?

(The question was read.)

Mr. Spohn: Objected to as calling for an opinion, no (950) proper foundation. What does he know what efficiency the Ford Motor Company had on those machines.

Mr. Farley: Might I ask what your own witness, Mr. Moise, meant, when he expressed this opinion. I think the designer of the machine, the opinion of the designer of the machine is worthy of considerable weight in the case.

The Master: Did you have any experience as to the length of time it generally takes operators of machines or companies using these machines, to get the maximum efficiency of production out of them?

A. With the cam machine, it should not take so very long, because there are only a few operations that the operator has to go through. In probably a week or 10 days he would become very familiar with the operation of that machine.

The Master: With a machine of this sort, which was designed at least for a particular shaft, for the first time, in 1924, when you sold the machines to the Ford Motor Company, would there be a certain length of time in which difficulties would be arising in the machine, to a much greater extent than after the machine had been in use for some time.

A. I think the first machine was the tractor machine, and after that had been in the Ford factory for some time, we changed the design of the spindles, the spindle gears, to make it a more efficient machine, and one that would not wear so fast and give longer life, and after that, those spindles would hold up.

Q. This change of design you are referring to, Mr. Hunt, was that merely change of design or change of materials with the substitution of harder steels or what? **(951)** A. No, it was really a change in design. You see, in the first place, your tail stock spindle has to be moved back and forth, in order to remove the cam shaft from the machine. At first that spindle moved back and forth and also revolved in the bushing. Dirt or anything could get on the shaft as the shaft was in the forward position, and then be drawn back into the bearing as it revolved, and would wear this bearing more rapidly than if you had only one motion, the forward and back motion of the spindle.

Q. That means, then, as I understand it, that in the first machine which you sold to Ford for the Model F, or the tractor cam shaft, you had a drive on the tail stock as well as the head stock? A. That was a drive on both ends in both cases, but the spindle moved back and forth in the bushing, and also revolved in the bushing on the tractor, and this design was changed so that the spindle moved back and forth in a sleeve, and then the sleeve revolved in the bushing, and the spindle did not revolve in the sleeve.

Q. So that, if any chip should happen to fall on that tail stock spindle in the later design, they would not be carried on in between two parts that were rotating? A. Exactly. That made a better designed machine.

Q. When you designed the Model T machines, however, that change was incorporated in them, as I understand it? A. Yes.

Q. Now, assuming you have your machines, and let us refer specifically to these Model T Ford machines and assuming that a stop **(952)** watch time study, taken in the latter part of 1924, we will say was made of the machines, which indicated a definite production or a more or less definite production, would there be anything, in your opinion, that would alter the conditions in 1925 or 1926, assuming that no change was made in the machine? What factor, if any, would change that situation? A. As far as the actual time of one single operation was concerned, they would be the same, as you have not changed your gearing or the speed of your motors, and of course, the time cycle then would be the same at that time as any other.

Q. So that any changes that would occur would be changes in and part of the production cycle, which is other

than the actual machine time? A. Yes. In other words, if the parts were worn and the machine had to be tuned more on account of worn parts and changes made, there would be your loss in time and not in the actual cycle of the machine.

Q. Of course, any other variations there might be, then, would be variations in the system of handling the work? A. Yes.

Q. Of course, that could affect the cycle? A. Yes.

Q. But insofar as the machining time was concerned, that would remain fixed throughout the entire period of use of the machine? A. Yes.

Q. Except for loss of time due to breakage of the machine or the necessity of greater maintenance, is that right? A. Yes.

(953) Q. Now, I would just like you to state, Mr. Hunt, with your experience with these machines, would you say that as far as maintenance is concerned, that the maintenance costs would be increasing or decreasing throughout the period of use of the life of the machines? Do you understand my question? A. Of course, as you know, the heads of this machine was rather narrow, and it is impossible to build heavy bearings in the tool heads themselves, and therefore, after a certain number of revolutions, those bearings are worn and have to be replaced.

Q. The wearing of those bearings, however, will you state whether or not that would affect the time cycle? A. That would not affect the time cycle.

Q. Are you sufficiently informed concerning the operation of these machines at the Ford Company, to know whether or not your figure of 85 percent actual operation was actually achieved by the machines? A. I am not.

Q. I did not expect to go into this particular matter with you, Mr. Hunt, but you were present during the testimony of the former witness, Mr. Aptekar, and he was questioned at great length concerning the spring of the shaft, and its functioning in the cam shaft shapers of the Ford Company, a great deal of his examination being, I would say, directed, perhaps, to matters of opinion on his part. Let me ask you, did you ever see these Ford Company's cam shaft shapers? A. No, sir, not in operation.

Q. Did you understand the testimony of Mr. Aptekar's sufficiently to understand how that machine would function

in performing **(954)** those cutting strokes? A. I believe I did.

Q. Did you hear his testimony concerning the shaper tools bending the shaft down as they—assuming that the shafts were pulled upwardly and supported at the two ends as he described—that the tools would bend the shaft down and hold it in a straight position? Would you say that was in accordance with what would be expected in the operation of that machine, considering it from your knowledge of the machine and as an engineer? A. Well, naturally, when the shaper tool hits a piece, it causes a pressure, and if there is not something to resist that pressure, the shaft is going to bend, and the pressure being more than the power of the shaft to resist that, I would say that the shaft would give to a certain extent, probably sufficiently to bring it down directly into the bearings that were lined up for it.

Q. All right. You may cross examine.

(Thereupon, a recess was taken until 2 o'clock p. m.)

---

(955) Detroit, Michigan,
Thursday, January 26, 1939,
2 o'clock p. m.

Hearing resumed pursuant to adjournment.

The Master: You may proceed, gentlemen.

W. D. Hunt thereupon resumed the stand as a witness on behalf of the Defendant herein, and having been previously duly sworn, testified further as follows:

Cross Examination by Mr. Spohn.

Q. Mr. Hunt, you testified that you were employed by the Walcott Machine Company along in 1921 and 1922? A. Yes. I think I started to work there in 1922.

Q. And, how long did you work there, then? A. I am still with that same organization.

Q. Still with the Walcott? A. It is the Crank Shaft Machine, they are still building. It is a different company, but I was transferred from the Walcott Machine over to the Crank Shaft Machine Company.

Q. And, what machines do they manufacture? Just crank shaft machines? A. Crank shaft machines, and they build the cam shaft machine for the Walcott Machine Company.

Q. Are they still making some of those machines? A. Yes, sir.

Q. Are they still making replacement parts for them? **(956)** A. Yes, sir.

Q. Now, the Walcott machine was pretty generally accepted by the automotive industry, was it, along about 1921 to 1930? A. Not 1921. I think the Walcott cam shaft machine, when I first went there—of course, the cam shaft machine was rather new. I don't know just how long it had been going at the time when I went to work. I don't know when the first machine was made.

Q. But, a good many of the automobile companies purchased and used the Melling machine? A. Yes, sir.

Q. And, do you know whether any of those companies are still using that machine for turning cam lathes? A. They are.

Q. For turning cam shafts? A. For turning cam shafts.

Q. They are? A. Yes, sir.

Q. And you still make replacement parts for them? A. Yes, sir.

Q. Do you know the extent to which the Melling machines are still being used today by any of the automobile companies? A. I couldn't tell you just how many they are using. The Dodge, I believe, are using it; Chevrolet are using them; Packard.

Q. Cadillac? A. I believe they are; yes, sir.

Q. Nash? A. Yes, I believe the Nash are using them.

Q. White? **(957)** A. Well, we haven't furnished any new set-ups for White in quite some time, but they have our machines.

Q. Chrysler? A. Yes, sir. There are one or two companies that have gone to casting cam shaft, and, of course, those machines aren't being used because they grind directly from the casting. Now, what companies have ceased to use the Walcott machine and gone to the cast cam shaft, I couldn't say.

Q. Do you know any other automobile companies that are now using the Melling machine? A. Well, of course,

the Muskegon Motor Specialties Company are using our machines.

Q. Can you recall offhand, or do you remember any other companies that are using the Melling machines? A. Let me see, the Hudson, I believe. I don't know. We have named a lot of the larger companies.

Q. Now, the Muskegon Motor Company, Motor Specialties Company, that makes only a cam shaft, does it not? A. I believe that is all they make.

Q. And they are still using your Melling machines? A. As far as I know.

Q. And, do you know whether that Muskegon Motor Specialties Company makes cam shafts for automobile and motor manufacturing companies? A. I don't know who they make them for.

Q. Would you have any information about or concerning the number of cam shafts that Muskegon puts out a year? A. No, sir.

Q. Now, you remember the time when you recommended to the Ford Motor **(958)** Company that they put on a new overhead cam when they started to manufacture their A models? A. Well, in the changing from a Model T to a Model A, it was absolutely necessary to change the overhead shaft.

Q. You made such recommendation to them, did you? Did I understand your testimony correctly? A. Well, the testimony I gave this morning was the fact they changed the shape of the nose of their cam on the Model A after we had laid out the overheads which necessitated a new set of overhead cams being made.

Q. Did your company, or do you know whether your company made that new set of overhead cams? A. Yes, sir, we did.

Q. You did. For all the machines? A. As far as I know.

Q. Do you know how much stock your machine took off the cams on the T cam shafts? A. No, sir. Of course, that varies with the condition of the forging dies. When the dies are new, why, the machine would have to take off less stock than when the dies became worn.

Q. And, how about the F shafts, the tractor shafts, would you know how much your machine took off? A. No, sir.

Mr. Spohn: That is all, Mr. Hunt.

The Master: That is all. Wait a minute, do you have some more questions, Mr. Farley?

Mr. Farley: Just one question.

(959) Re-Direct Examination by Mr. Farley.

Q. I think I showed you this morning one of these purchase orders, I don't know whether this is the particular one, but I am now showing you two purchase orders. I will show you the one, Exhibit 219, for 15 Melling cam turning lathes, and this purchase order states, "For operating above 15, 5 horsepower, 1150 R.P.M. Westinghouse motor," and so forth. That was the type motor specified and that was the type recommended for you and upon which the calculations which you gave this morning are based? A. Yes, sir.

Q. When you saw the machine out in the Highland Park plant recently, did it have that same motor on or type of motor, or what did you notice, if anything, about the R.P.M.'s of the motor? A. I think it is an 1100 R.P.M. motor on the machine at the Highland Park plant at the present time, and that would, of course, tend to slow down the speed, slow down the speed in proportion to the percentage of drop in speed.

Q. That is, the proportion of 1100 to 1150? A. Yes, sir.

Mr. Farley: That is all.

Mr. Spohn: One more question, Mr. Hunt.

Re-Cross Examination by Mr. Spohn.

Q. Does your company sell much merchandise of any type to the defendant, Ford Motor Company? A. Well, we haven't sold them practically any in the past year, I believe.

(960) Q. Prior to that time? A. We have sold them considerable equipment at times.

Mr. Spohn: At times. That is all.

Re-Direct Examination by Mr. Farley.

Q. Would the fact that your company sold any merchandise to the Ford Company, in any way influence or modify your testimony? A. No. I just gave the testimony

as the machine was actually designed, and it couldn't change that.

Mr. Farley: That is all. You have no interest in this proceeding?

A. No, sir.

* * * * *

---

(962) Henry G. Pillinger thereupon resumed the stand as a witness on behalf of the Defendant herein, and having been previously duly sworn, testified as follows:

Direct Examination by Mr. Farley.

Q. Your name please? A. Henry G. Pillinger.

Q. You are employed by the Ford Motor Company, Mr. Pillinger? A. Yes, sir.

Q. And you live where? A. 924 Lincoln Boulevard, Lincoln Park.

Q. That is a suburb of Detroit? A. Of Detroit.

Q. How long have you been employed by the Ford Motor Company, Mr. **(963)** Pillinger? A. Well, since 1925. That is about—

Q. And, in what capacity were you? What was your job with the Ford Company in 1925? A. Well, I started in the tool room there and I did about four months there, and then I was transferred on to the cam department, on the Walcott lathes.

Q. Have you ever served an apprenticeship, Mr. Pillinger? A. Yes, sir.

Q. And, when and where did you serve your apprenticeship? A. In England.

Q. To learn what trade? A. Tool making.

Q. Tool maker and machinist? A. Machinist and general tool maker.

Q. After you worked in the tool room at the Ford Company in 1925, how long did you work there in the tool room? A. Well, about—I started in the tool room about February, and I worked there about three months.

Q. And then what department? A. Then I was transferred into the cam department.

Q. And, just what were your duties in the cam department? What was your job over there? A. Well, I went

out there to work on the Walcott lathes, and after I had been there a while, I was put in charge of the job.

Q. What part of the job were you put in charge of? A. Maintenance of the Walcott lathes.

Q. And, just what was the work you did in maintenance of the lathes, **(964)** repairing the lathes when they were broken, and things of that sort? A. Broken down, and—

Q. (Interposing): How many men did you have working under your supervision when you were in charge of that job? A. Well, there were about four men on each shift; four men on days, four on afternoons and midnight we ran around three, I guess.

Q. How long did you work on that job of maintenance for the Walcott lathes? A. Well, I worked on it until we quit running the machines.

Q. And, when did you quit running the machines, if you know? A. I think it was about 1931, as far as I remember.

Q. What type of shafts were the Walcott lathes machining in 1925 when you first went there? A. Model T's.

Q. And, did they continue to machine Model T shafts until the time they discontinued—did you always make Model T shafts on the Walcott lathes? A. Yes, sir.

Q. Until Model T production stopped? A. Until they stopped.

Q. And then what did you machine on? A. We went on the Model A's then.

Q. Now, after you stopped using the Walcott machines, what then did they use to machine the cam shafts? A. The mills, the Pioch mills, was it?

Q. Was there anything in connection with the stopping of the use **(965)** of the Walcott lathes that was in any way unusual or would enable you to remember the facts as to when and how they stopped using them? A. Well, they just, as the mills come in, they discontinued to use the lathes.

Q. And, what is your recollection, if any, concerning the date when they stopped using the lathes? Was that after all of the mills came in or— A. (Interrupting): No. I think as the mills came in, we began to use them.

Q. Did you have anything to do with, any work to do in connection with the Walcott lathes when the mills would come in and the Walcott lathes would be moved out? A. In the way of repairing?

Q. Well, what I have in mind, you in charge of the machines there, if an order came in to move the Walcott machines out, would you or any of your men do anything with those machines before they were moved out of the shop? A. Well, no. When a machine was got in a bad shape, we generally ship one to the shop for overhauling.

Q. How often did you overhaul the Walcott machines? A. You mean a complete overhaul?

Q. Yes. A. Well, as a rule we had one in the shop at a time. They would send one in there, and they would overhaul it, and when it came back we would send another one in.

Q. You would keep one machine in? A. We would keep one in there all the time.

(966) Q. All the time? A. That is right.

Q. Did you have anything to do at any time at all with dismantling a number of the Walcott lathes, taking the overhead, as they call it, off? A. The cam shafts and slides, you mean?

Q. Yes. A. Oh, yes. We used to have to do that, take the slides out and to do that we had to pull the master overhead shaft out, you see.

* * * * *

(970) Q. I understand you have been actively engaged in the repair and charge of those machines from the period 1925 until 1931? A. Yes, sir.

Q. And, during that period of time, did every one of the machines that were in that department come under your personal observation? A. You mean the cam lathes alone?

Q. I mean the cam lathes alone. I mean would there be any—wasn't it really a part of your duties to more or less know what each and every one of those machines were doing insofar as their operating condition was concerned? A. Yes, sir, it was my job to see they were kept running.

Q. So, you observed the operation of all of that battery of machines during their entire period of use at the Ford Motor Company? A. Yes, sir.

Q. And, would you say that the operation of that machine in Highland Park was in any way different from the regular operation of those machines during that 1925 to 1931 period? A. Not to my knowledge.

Q. Now, during your operation of that machine, a certain part of the cycle, one of the parts of the machine broke? A. Yes.

Q. Will you tell the Court just what happened then at that time; just what it was that broke? A. It was the overhead spring that kept the tool, the tool on to **(971)** the cam, on to the tooling cams. This is the spring (indicating).

Q. Just a minute. I have here a plate model, Mr. Pillinger, which is marked Defendant's Exhibit 140. Will you first state whether or not that shows correctly the operating parts, the main operating parts for making the cam the right shape of the Walcott machines, aside from the fact that this is just out of place? A. Yes, sir. This is a similar machine; similar model.

Q. Now, you spoke of a spring breaking, and you pointed to a small spring on this model, the lower end of which is connected to the tool holder, which is marked with a reference number "15"? A. Yes, sir.

Q. That is right, isn't it? A. That is right.

Q. Now, will you state whether or not the breaking of the spring that occurred there was anything particularly unusual insofar as the operation of those machines are concerned? A. No, sir. We very often have those springs break.

Q. Now, when those springs broke, in your experience with the machine, I understand from—in this particular case when that spring broke, did it do any damage to any other parts there? A. Well, it didn't at that time, because I stopped the machine pretty fast.

Q. How about the cam shaft or the working shaft, did you notice— A. (Interrupting): Well, it dug in a little on the work shaft, but it didn't break any other part.

(972) Q. If you had not stopped the machine so quickly, would any further damage have occurred? A. Well, we had then, when those springs break they break this here—the tool holder here.

Q. Part 15? A. Yes.

Q. Did that very frequently occur? A. Yes. That was one of our troubles with those springs breaking.

Q. Did you have any other major repair difficulties with the Walcott machines? A. You mean from a broken spring or any—

Q. (Interposing): I meant from any other cause? A. Well, the slides were our main troubles. These slides here (indicating).

Q. And, by these slides here you are referring to the part colored green in this model and marked "11"? A. That is right.

The Master: What trouble did you have with the slides?

A. Well, we had continually to keep them clean. They fill up with dirt and chips and, of course, that would give us a bad cam shaft.

The Master: How often when the machines were used in regular production, would a spring on one of those machines break?

A. Well, sometimes we would have two or three a day break.

The Master: Two or three on all the machines?

A. On the whole, say, 16 machines, we had, I guess it was. And, other days we would probably g[illegible] a day with no break. It just **(973)** happened some days we got the whole thing.

The Master: Can you say anything as to the percentage of times that the breakage of the spring would also cause the breakage of the tool holder?

A. Well, that depended on the operator. If the operator was fast in stopping the machine, he may be able to save the tool holder. You see, when this spring did break, and this nose would come around here, you would very often hit on here (indicating), and cause this tool holder to break off here.

Mr. Farley: The witness, when he said, "this nose," he pointed to the nose, the high nose on the cam 21, and when he said, "the roller" (?) he was pointing

to the roller 20. Do you want to make any more explanation of that?

The Master: I wanted to get some rough idea. Would it be, say, once in every five times when the spring would break it would be followed by the tool holder's breaking, or once in a hundred times?

A. I would imagine it was more than that. If the operator wasn't very quick he would break it off every time.

Q. And, when the operator was running two machines, how would that affect that? A. Of course, that didn't help any. Sometimes the spring would break, and it would be gone before he could even get back to it.

* * * * *

(974) Q. Now, will you state whether or not there was any particular difficulties experienced with the machines when you made the changeover from Model T to Model A shafts? A. From the Model T to the Model A shafts?

Q. Yes. A. Why, yes, we had quite a lot of trouble there. Our main difficulties **(975)** was on the nose of the cam, we couldn't seem to get a good form on that.

The Master: Was this before or after you changed the overhead in the master cam that you had the difficulty?

A. It was while we were producing the Model A cam shaft.

The Master: Did you have the same difficulty after you changed the overhead?

A. Well, no. We never did change them. We changed them the once, but that is all we did do. We had to change the form—

The Master: (Interposing): As I understand, you operated the machines, or attempted to operate them on the Model A shafts with the same overhead at first that you had in turning the Model T cam shafts, and then the overhead was changed.

A. No, we changed the overhead as soon as we started on the Model A's.

Q. (By Mr. Farley): Would you, as a mechanic, Mr. Pillinger, attempt to produce the Model A shaft, using the same master cams as you had used on the Model T? A. No, I wouldn't.

Q. It just couldn't be done? A. It couldn't be done.

Q. Now, then, we just had a witness who testified that after the Model A job started, there was a change made in the design of the nose of the cam, and that it was necessary then, that after the change in the design of the nose was made, either increasing or decreasing the radius of the nose—you understand what I mean? A. Yes.

(976) Q. (Continuing): —you attempted or you continued to attempt to run the job with the first set of master cams for the Model A, and that you ran into difficulties, and then it was found necessary to change again the master cams in view of the change in the design. Do you remember anything about that? A. Well, of course, when making a new cam you may run into little difficulties while you are producing that master. What I mean to say is that we didn't quite change the cams after they once started on high production. While we were forming the master cams to produce that shaft, we probably did make changes.

Q. That is, there would be, before any change in one model to another, a certain development period in the department where you would be, let us say, fiddling and fooling around with cam shapes? A. That is right, to get the perfect cam.

Q. And, do you have any recollection of having done that with the Model A job that was made—did you cut and try with your cams until you got the best results? A. Yes, we did do that.

* * * * *

(981) Q. About, if you know, Mr. Pillinger, how often did you in regular production, have to change the tools on the Walcott machines? A. Well, it depends. Some days they would go a lot better than others, and I know some days they would change, perhaps, a half dozen times.

(982) Q. The entire set of tools? A. The entire set of tools.

Q. That would be on one shift? A. On one shift.

Q. That would mean you would change those tools about every hour and a half or hour and a quarter? A. That is right.

Q. What was the ordinary practice? How often did you change tools. Let us say, when things were going good; every two shifts, or one every 24 hours, or 48 hours, or what? A. At least twice a day.

Q. Twice a day. That would be about every four hours? A. About every four hours.

The Master: How much of a job was it? How long would it take?

A. I would say ten minutes between the time they were changed and set up again.

Q. (By Mr. Farley): That would be a change of all eight tools? A. Yes.

The Master: When you changed them did you make it a policy or a point to change all eight, if possible, instead of making a change of a single tool?

A. Well, sometimes one tool would break, and it all depended on how the job was going. If it was making a good job, you would look at your tools and you would leave them in there and just replace the one tool.

Q. (By Mr. Farley): How long,—the particular tools that were in the machine which you demonstrated at Highland Park, do you **(983)** know how long they were used in the machine without re-sharpening? A. You mean since we started that machine out there?

Q. Let me first ask you this. When you were told to go over and get that machine in running shape, did you change all the tools before you demonstrated the machine last Friday? A. Yes, sir.

Q. You did? A. Yes, sir.

Q. And, now, I think you said you took three tools out of the machine, one of them I happen to have in my pocket which was turned over to me, and I believe you have the other two.

(The witness thereupon produced the tools above referred to.)

Q. Will you just describe to the Court, the differences, if any, between those tools, and the reasons for the differences? A. You mean on the width? Well, this tool here—

Mr. Farley: (Interposing): Let us get some tags and we will tag these.

Q. (By Mr. Farley): While these are being tagged, you said that you always kept one machine down in the tool room for overhaul and repair. About how often was it, Mr. Pillinger, that you took any particular machine and sent it into the tool room? Let us say, just think of this machine that was out there in Highland Park, and that was in your production line. How often would it be that that particular machine would get into the crib, or wherever it was that you gave your general overhauling or repairs to them? A. Well, I figure about three weeks or a month, I guess they take to overhaul that machine.

(984) Q. How long would you spend on overhauling a machine when you got it in there? Would it be one day or two or three? A. No. It used to be in there probably three weeks for general overhaul. They used to overhaul the whole thing.

Q. Then, you would put that back on the line? A. When that was fixed, we would send another one.

Q. And, just go down the line until— A. (Interrupting): Keep coming around to the machines again.

Mr. Farley: I will ask that these be marked.

(An article was thereupon marked Defendant's Exhibit 243 by the reporter.)

Mr. Farley: Let us call the other tool Exhibit 244.

(An article was thereupon marked Exhibit 244 by the reporter.)

Mr. Farley: Now, the tool which we marked Exhibit 244 has etched on the side of it, "CM-1034-1," is that the way—would every one of those tools of that type have that same number on (handing article to witness)?

A. No, I don't know what that is there.

Q. (By Mr. Farley): Now, if you will refer to the tool which is marked Exhibit 243 and explain—let me say I notice that tool is very much smaller on the cutting nose of the tool than the tool which we marked 244. That is right, isn't it? A. Yes.

Q. Just explain the reasons for that, if you will, please? A. Well, the reason for grinding this tool in this way, it is for clearance for the center bearing. This is the

tool which we use on the cam just ahead of the center bearing, and if we **(985)** had the wide tool we wouldn't get a clearance. Right here, see (indicating).

Q. That is, because the space between the center bearing and the adjacent cam is very much closer together or very much narrower, rather, than for the other cams? A. Here is the way that goes (indicating).

The Master: You are indicating the cam, the number 4 cam.

A. Number 4 cam.

The Master: To the left of the center bearing as you face the machine?

A. And, also here on this one, number 8 cam.

The Master: Why is this tool, the tool Exhibit 243 you have in your hand, longer than the other one you produced, and notched?

A. Well, these notches are so that the man that is putting these tools in, so that he can get a hold of it with the pliers to pull them out. And, the length, these tools are worn more than this. This is about the original length of the tool. These are worn down, being ground several times.

Q. (By Mr. Farley): Referring to Exhibit 243, that is, you say, a newer tool than the other one, and hasn't been ground as many times? A. A newer tool; that is right.

Q. Do you happen to know about the number of grindings those tools would have before they are unfitted for use? A. Well, I figure they would have quite a bit of grinding because there is about one inch from this toe to this. There is about one inch difference in length, and they can grind this down until they get about one inch.

(986) Q. And, the reason for having the grooves in the side of the tool, Exhibit 243, is because there was less space for the tool setter to get in there so that he could grip that with the pliers, is that the idea? A. No, all the tools had this. I don't know why this hasn't got it, but it is probably ground the wrong side, and it was ground off before it was cut down so short.

Q. Now, do you know about how many shafts were turned with those three tools that you have in your hand, since they were last re-ground, since they were put in the

machine in a sharpened condition? A. Well, I should say around 50.

Mr. Farley: Will you mark this, please?

(An article was thereupon marked Defendant's Exhibit 245 by the reporter.)

The Master: For the purposes of the record, the short tool which doesn't have the grooves in the side, which has been produced by the witness, and which we have referred to, is Exhibit 244.

Q. (By Mr. Farley): Now, Mr. Pillinger, you mentioned one of your troubles, or one of the major troubles you had with the Walcott machine was with the slides, and that, as I understand your testimony, was due to the fact the chips would get into the slides and necessitate that they be taken down for regular cleaning and removing of the chips? A. Yes.

Q. How often was it ordinarily necessary to take machines apart and take the slides out to clean out the slides? A. Well, I figure the way I used to work, I would pull one machine (987) down a day; about eight slides out.

Q. And that would be— A. (Interrupting): By doing this we would keep the job running more even, you see, and I found before that some mornings I would go in there and probably find, say, two or three machines down even.

Q. Stuck? A. Stuck up.

Q. The tool slide stuck? A. And made it a practice to tear one machine down a day.

The Master: How long a job was that to take it apart and clean the slides?

A. Well, we did not clean the slides. We used to send them to the shop. But, it would take up about two and a half to three hours to take them out and replace them with others, and get the machine ready to operate again.

The Master: Did that include the time—oh, you replaced the slides with others?

A. We had slides ready to put in the machine.

The Master: As this machine is operating, where would the chips fly? In what direction?

A. They would fly around here. In fact, we had a guide in front to keep the chips from going back in; in fact, there was a felt in front of this tool holder here, a piece of felt.

Mr. Farley: That is all, you may cross examine.

I am not sure but I offer these tools in evidence, Exhibits 243, 244 and 245.

The Master: Exhibits 243 to 245 are admitted as being **(988)** tools used in the demonstration of the Walcott lathe.

Mr. Farley: Attention has been called to the fact, —I am pretty sure we put in and offered in evidence the cam shaft, Exhibit 234. I think that is in. I am not sure whether I offered in evidence the work sheets, 235 and 236 of Mr. Rauser. I think they were offered.

The Master: Yes, they were. I remember as far as the Walcott—or admission was withheld pending a showing the machine was in good operating condition. I will wait until the end of this cross examination to rule on that.

Cross Examination by Mr. Spohn.

Q. How long would it take to take out those slides in the Walcotts? A. Take them out and replace them?

Q. Yes. A. You mean to get the machine ready to go?

Q. Yes. A. Around about two and a half, three hours.

Q. How many men did it take? A. Two men.

Q. And, you did that on one machine a day, about? A. Yes, sir.

Q. When you say a day, do you mean a shift, or what? A. Eight hours.

Q. Eight hours. What do you mean when you say overhaul the machine? A. Well, that is a complete overhaul.

Q. Now, tell us what that meant? **(989)** A. Well, they replaced the clutch, probably; check the clutch, bearings; scrape the bed, probably, if it was needed, and give the machine a thorough overhaul.

Q. What else besides that? A. Well, you know, line the body on the machine, that works with the cam shaft.

Q. Look at the lining on that? A. They would probably line that up.

Q. And, what else? A. Well, I replace the pins, steady rests, and center bearing on the cam shaft, and the two end bearings on the cam shaft; that is, the master cam I am talking about.

Q. You say you had one machine in the tool shop for about three weeks, is that right? A. About three weeks.

Q. And then, you would bring another machine in? A. That is right.

Q. That is, each machine was in there about once a year? A. Well, according to that, yes.

Q. Did you ever work on any other machines other than the Walcott machines? A. Yes, we had other machines around.

Q. What other machines did you work on other than the Walcott machines? A. You mean—

Q. In overhauling? A. Well, we had centerless grinders.

Q. How many of those machines did you look after? A. About a half dozen, I guess.

(990) Q. Did you overhaul them, too? A. No, sir.

Q. Who did the overhauling work on them, do you know? A. You mean the general overhaul?

Q. Yes. A. They never went in the shop for general overhaul.

Q. What other machines did you do that work on? A. Let us see, there was wrist pin machines there.

Q. How many of those were there there? A. About a half dozen.

Q. Did you work on those, too? A. Yes.

Q. That was during the time you were working on the Walcotts? A. Yes.

The Master: Did I understand you to say you actually did the overhauling work on the Walcott lathes?

A. Yes.

Q. (By Mr. Spohn, continuing): And these centerless grinders, they were there when the Walcott machines were there, were they? A. Yes.

Q. And you had those under your charge, too; did the repair work, did you? A. Yes. We didn't have to do much to them. There wasn't much overhauling to them.

Q. But, on the ordinary repair work? A. Any little job we would do, yes.

Q. What other machines were under your supervision? A. That is about all I have.

(991) Q. And you had how many men under you? A. Four men a shift.

Q. And those four men worked on all those machines, did they? A. Yes.

Q. And did all the repair work that was necessary on all those four machines, on all those machines? A. Yes.

The Master: Were those four men spending all their time on repair work and maintenance?

A. Yes, sir.

The Master: None of those men operated those machines at that time?

A. No, sir.

Q. (By Mr. Spohn): Did those four men work, sometimes work in the tool shop? A. No, sir. Only when production was shut down. They would come in, probably, on a Friday, and that was all, and go in there for a day, perhaps.

Q. Who did the tool changing on the Walcott machine? A. Change the tools?

Q. Yes. A. They had a tool setter there.

Q. The operator didn't do that himself, did he? A. No, sir. In fact, they had two there, as far as I know; two tool setters.

Q. In the meanwhile he was running the other machine, then, the operator was? A. You mean the tool setter?

(992) Q. No, when the tools were being replaced, the other machine— A. (Interrupting): He would be running the other machine.

Q. He would be running the other machine? A. Yes, sir.

Q. All during that time? A. Yes, sir.

Q. Those tools that have been offered in evidence here as Exhibits 243, 244 and 245, where did you get those tools, do you know? A. At Ford Motor Company. I ordered them.

Q. Did the Ford Motor Company make them themselves? A. No, sir. They had them in stock.

Q. They had them right in stock there? A. Yes, sir.

Q. Still have some of those tools, do they? A. As far as I know. I couldn't say whether they have or not.

Q. Do you know whether the company made those tools, or whether they were purchased? A. I couldn't tell you that, sir.

Q. One of these tools has a mark on it, I think it is Exhibit 244—no, that isn't the one I had in mind—Exhibit 245 has a mark on it, "9-Z-215-D-1," does that mean anything to you? A. Why, that is the "Z" number of the tool. Every part you get has Z numbers on it.

Mr. Farley: What do you mean by a "Z" number, do you know?

A. That is a number you order another tool from, if you need one.

Q. (By Mr. Spohn): Doesn't the number "Z" mean anything in the defendant's production? I mean, doesn't the Ford Motor Company make "Z" numbers themselves? A. Yes. Every part you get is under a "Z" number. Every part in **(993)** a machine has a "Z" number on it.

Q. Whether the machine is made by the defendant, or whether you got it somewhere else? A. Well, what do you mean? Tools or—

Q. Tools? A. Yes, nearly everything is "Z" numbered. If it was sent outside to be made, there is a "Z" number on it.

Q. Doesn't that "Z" number mean the Ford Motor Company made those tools themselves? A. No, sir.

Q. It does not? A. No, sir, not to my knowledge.

Q. Would you know where the tools were gotten by the company? A. Would I know?

Q. Yes. A. I couldn't tell you.

Q. You wouldn't know? A. No. I don't purchase the tools.

Q. What department are you in now, Mr. Pillinger? A. I am in 641, the connecting rod.

Q. The connecting rod department? A. In the motor building.

Q. Are you on a machine there now? A. I am still maintenance.

Q. Still maintenance man? A. Yes.

Q. When you were running this Melling machine out there last Friday, two springs broke within an hour. You noticed that, did you? **(994)** A. Yes, sir.

Q. That was unusual, wasn't it, in your experience? A. Well, it was in mine, because I don't run the machines all the time, but during the period of those machines, we had a lot of springs break.

Q. But, your testimony on direct examination was sometimes some machines would run a day without breaking springs? A. Yes, and sometimes you would get three or four breaking a day.

The Master: Were you referring to the entire battery of machines when you said they might run a full day without breaking?

A. Yes.

The Master: Or, just a single machine?

A. No. I mean a single machine.

The Master: Not all 16 machines?

A. No, sir.

Q. (By Mr. Spohn): Haven't you changed your testimony on that? Didn't I understand you to testify on direct examination that sometimes they would run a whole day, all 16 machines, without any break in any of the springs? A. I don't know what I said.

The Master: I think when he was referring to all 16 he was talking about the change of tools, rather than springs.

Q. (By Mr. Spohn): At any rate, wasn't it unusual to have two springs break within an hour in the operation of that machine out there last Friday? A. I beg your pardon.

Q. Wasn't it unusual in your experience to have two springs break within an hour on that machine? **(995)** A. No, sir. We have had that before several times.

Q. Within an hour? A. Yes, sir.

Q. Some days they would run, as you say, without a spring breaking on a machine? A. Yes.

Q. And sometimes maybe two springs would break during the whole day? A. Yes.

Mr. Farley: On the one machine you are referring to now?

A. Yes, sir.

• • • • •

(999) Q. Did you make overhaul records? A. No, sir.

Q. You didn't? A. We used to get an order to overhaul certain machines.

Q. And those were the only ones you overhauled? A. In fact, it was a standing order to repair the machines.

Q. To repair the machines. But, how about overhauling? A. Well, overhauling, whatever you want to call it.

Q. And, you got a standing order for that? A. Yes.

Q. What do you mean by a standing order, was it every three weeks? A. Well, they got the standing orders for all machines—like the job I am on now. I got a new order about every, say, probably two months, and any overhauling work that has to be done on (1000) that machine is done on this particular order. It is made up by the office.

Q. Is that a written order? A. It is a written order.

Q. Were these machines taken into the tool shop for overhauling without a written order on any occasion? A. Not that I know of.

Q. Every time they were overhauled, there was a written order, is that right? A. Yes, sir, as far as I know. Any machine that is moved from the department, there is always a written order on it before they ever move it.

Q. So, you never took it out of production to go into this tool shop without a written order for it? A. Not to my knowledge.

Q. And, all the other repair work you did was right on the floor? A. Just on the floor, yes.

Q. Yes. Who furnished the tool holders, do you know, when they broke? A. Well, I don't know whether an outside company made the standing order on the tool holders, but I think in case of emergency we would make them up, make one up, probably, if we didn't have any at hand, you see.

Q. But, you say the greatest difficulty you had with these machines was the breaking of the springs, is that

right? A. Yes. Not the greatest difficulty, no; the slides was one of the main troubles. I wouldn't say that was the most important difficulty, the spring.

(1001) Q. And, you clean the slides out of one machine a day on an average? A. In a day.

Q. And, I understood you to say you never operated one of these machines in the production line at all? A. Not on production; no, sir.

Q. Do you know whether or not when this machine was pulled off of production in 1931, whether it had been overhauled recently before that time or not? A. Well, it probably had to be overhauled in its term, but I can't remember whether there was any overhaul on that special one machine.

Q. But, anyhow, if there was an overhaul, there was a written order for you to do the overhaul? A. Yes, sir.

Q. Now, by this standing order that you say you had, what was the form of that order? Where would you get it when you had to overhaul a machine? A. Well, it would come from the superintendent's office.

Q. And, would it be on a printed form, or something like that? A. A piece of paper. Not paper; kind of a card.

Q. Would it tell you what was to be done? A. Well, it would say keep so many machines in running order, or in condition for a certain period of time.

Q. And then would that cover a given period. That is all? A. No, sir; no given period. What I understand with the standing order like that, as soon as you finish—if so many days of a certain period of time elapses without making repairs, they close the order, and then you have got to produce another.

(1002) Q. And, you made no written record of whatever overhauling you did to these machines? A. No, sir.

Q. Never did? A. No.

Mr. Spohn: That is all, Mr. Pillinger.

Mr. Farley: Just a few more questions.

RE-DIRECT EXAMINATION by Mr. Farley.

Q. Who was your immediate foreman, Mr. Pillinger, on that job? A. Well, John Schmidt. He was the foreman over the whole department there.

Q. In connection with your testimony about the blackboard and that sort of thing, suppose that a department was not able to get out cam shaft production, cam shaft turning, because your cam shaft lathes were down for repairs, or were breaking too frequently, would you ever be hauled on the carpet for that? Would they get after you, say, Al Smith? A. Well, they naturally—

Mr. Spohn: (Interposing): Just a moment, I object to the question, would he ever be called. It is all right if he limits it to was he called.

The Witness: Never.

Q. (By Mr. Farley): In connection with your testimony about having the six, about half dozen centerless grinders and about wrist pin machines, you stated as far as the centerless grinders were concerned, you never had any complete overhauls on those. How about the wrist pin machines? Did you have to completely **(1003)** overhaul them like you did these Walcott machines? A. It was just a matter of lining them up. We did not do much repairs on them, just the V blocks. We had to line them up once in a while.

Q. What proportion of the time would you say you and your crew had to devote on the wrist pin machines and centerless grinders as compared with the Walcott machines? A. Well, half hour or an hour a day, I guess.

Q. One man? A. Yes.

Mr. Farley: That is all.

Re-Cross Examination by Mr. Spohn.

Q. How much time did you spend on these centerless grinders each day?

Mr. Farley: He said about a half hour for both.

A. About a half hour or hour.

Q. (By Mr. Spohn): And, how much on the wrist pin machines? A. About the same.

Q. That is each one? A. Yes.

Q. Or, each machine? A. Yes.

* * * * *

Q. (By Mr. Spohn): You had four men, and there were 16 Walcott **(1004)** machines? A. Yes.

Q. And, there were 6 centerless grinders and 6 wrist pin machines, and that was all that was in there? A. That is about all, as I can recall.

Q. And, you don't recall any other machines you had anything to do with? A. No, sir.

Q. During that period? A. No, sir.

Q. Do those men give all their time to that department in which those machines were located, the four men under you, and you? A. Oh, yes, sir.

Q. Can you tell us, again, how much of your time was spent on these centerless grinders, you and the four men? A. Well, about half an hour or an hour. That wasn't really my job but we used to go over there. If those jobs come up, we would fix it up.

Q. Was that on each machine? A. No, just on the whole job.

Q. And, about your wrist pin machines, how much time was spent on them? A. About an hour, I guess; about the same time.

Q. And on each machine, or on what? A. Well, it amounts to a whole group of machines.

Q. And, when you say an hour, was that each man spent an hour? A. Oh, no; just say one man go over there for an hour and do a little lining up, or something, and that would be about all.

(1005) Q. And did those same men do the overhaul work on the wrist pin machines? A. Well, we didn't have much overhaul on those machines; not as regards to maintenance on the floor.

Q. But your men did whatever overhaul work was done on them? A. No, those machines were taken out when they were worn very bad.

Q. Oh, when they would get worn very bad they would be taken out of the department? A. They would be overhauled or taken out and another machine brought in.

Q. Are you familiar with any of the other departments of the defendant company than the one you are in? A. 641.

Q. That is the only one you know? A. Yes, sir.

Q. Was that the cam shaft department? A. That is the connecting rod; I am still in that department.

Q. Go back to the time when you used to be in the cam shaft department, 410? A. Yes, sir.

Q. Are you familiar with any other operation, machine operation, other than the turning operation and the operation performed by these centerless grinders and the wrist pin machines? A. No, sir. I was in that one department.

Q. That is all you know? A. Yes, sir.

Q. Do you know how many maintenance men were in any other portion of the department than 410? (1006) A. No, sir.

Q. You have no knowledge of that at all? A. You mean the grinding end?

Q. Whatever you do know about, maintenance and those other things. A. I guess there were two or three men down in the grinding; couple of men, perhaps.

Q. Down in the grinding room. Do you know any other operations in which there were maintenance men? A. Well, there are maintenance men over there on different operations.

Q. Do you know how many maintenance men were kept in the whole department? A. In the 410 department?

Q. Yes, per shift? A. There may have been about six or seven.

Q. I beg your pardon? A. There may have been about six or seven.

* * * * *

(1009) JOHN L. SCHMIDT was thereupon called as a witness on behalf of the Defendant herein, and having been first duly sworn, testified as follows:

DIRECT EXAMINATION by Mr. Farley.

Q. What is your name, please? A. John L. Schmidt.

Q. Where do you live, Mr. Schmidt? A. What is that?

Q. I say, where do you live? A. Highland Park; 193 Hill Avenue.

Q. And, you are employed by the Ford Motor Company? A. Yes, sir.

Q. How long have you been employed by the Ford Motor Company? A. Since 1916.

Q. Did you ever serve an apprenticeship, Mr. Schmidt? A. Not here. I did in the East.

Q. And where? A. E. F. Sturdeman Marine Engines.

Q. To learn what trade? A. Machinist.

Q. And, when you went to the Ford Motor Company in August, 1916, what was your job there? A. I worked in the tool room; the front tool room.

Q. What particular type of work, if any, were you assigned to there? **(1010)** A. Well, when I first started in for the first two months I took care of all of the fixtures in the transmission department, and then after the first two months I had the job assigned to me to take care of all the cam shapers in Department 410; that was the cam shaft department.

Q. And how long did you work in Department 410? A. All but the first two months I have been in the employ of the Ford Motor Company.

Q. You are still employed in that department? A. Yes, sir. That and 498, both.

Q. And, what are your present duties at the Ford Company? A. Sort of maintenance, taking care of the machines, tools and fixtures.

Q. In Department 410 and? A. 498 and 410.

Q. And, are you in charge of that maintenance work? A. Yes, sir.

Q. How long have you been in charge of it? A. Well, for the bulk—first one department was over at Highland Park, I just took care of the 410 at that time. When they moved out to the River Rouge, they gave me the both departments to take care of, which was in 1916 in Highland Park until October, 1925. I think it was November of 1924, I think I left Highland Park and went to the Rouge, and then they gave me the both departments to take care of from then on.

Q. And, your job at the present time, and for the last 22 years, has been that of maintenance, which is to see to it that the machines are kept in proper running condition? **(1011)** A. Yes, sir.

Q. In connection with this work of yours of maintenance, is any part of your job to observe or know what the output of the various machines would be that are under your supervision? I mean, their production per hour? A. No. The production part wasn't really under us. My

job was to chiefly see that the machines ran and was kept in the best running condition that was possible, and if possible to improve on them as much as possible to keep them running.

Q. When you took over the cam shaft department 410 in 1916, what type of machines was the Ford Company then using in the department to machine the cams of the cam shaft? A. They were using a shaper at that time when I was in that department.

Q. And did you ever have any reason to note, or know, whether those shapers operated efficiently on that job? A. Yes, sir, they ran very well, indeed.

Q. How long did the company use these shapers, to your knowledge? A. Well, the first one—of course, I wasn't there, I didn't go until 1916, when I went to the Ford Motor Company, and I think they had about 3 or 4 shapers in that department at that time.

Q. When you went there? A. When I went there. But, they kept increasing as time went on.

Q. And, now, how long did they use the shapers? Let me see, what is your best recollection as to the largest number of shapers you had operating in that department? A. I think, if I remember right, we had 14 when we finished, and we **(1012)** had an order let out to the Walcott lathe people to build, I think, 3 or 4 of them, but that order was cancelled. And, we left about 14 shapers in the department, and instead of going through with the ones that they had an order for in Jackson, they cancelled the order and they bought 16 Walcott lathes through the Ford Motor Company, and I believe two of them and a demonstrator were sent to demonstrate the machine at Highland Park, and this demonstrator operated, if I remember right, I think about 2 weeks, and in the course of less than 2 months, I think the whole 16 Walcott lathes was in Highland Park plant, and they removed the shapers out of the department and put all those Walcott lathes in their place.

Q. Now, you had charge of maintenance of the shapers during all the time from 1916 on? A. Yes, sir.

Q. Until they were removed? A. Yes, sir.

Q. And, did you also have charge of maintenance of the Walcott machines when they were removed? A. Yes, sir, I did.

Q. And, what is your recollection of the date when they got the Walcott machines? A. Well, not to be exactly sure, I think it was in 1924, somewhere around March. It was somewhere around that period. I am not positive, but I think that was about where it was.

Q. How long, if you know, did the Ford Motor Company continue to use the Walcott machines; from 1924 until when? **(1013)** A. Well, they moved them out of Highland Park plant, I think it was in November, and moved them all out of there.

Q. November of what year? A. To the Rouge—1924. They went to the Rouge, and while they were at the Rouge they put the shapers back into running condition to keep up their production until they got these Walcott lathes shipped to the Rouge factory and set up, and running, and I think after they were down there a month or two, they wanted me down there to take care of them the same as I did at the Park.

Q. That is at the Rouge plant? A. Yes. So, I went down there, I think it was before Thanksgiving, or around in November, 1924, and they had the biggest part of the machines down there, when I went down there; after being down there, for, oh, a month and a half or month to a month and half they were there, so they kept calling up and calling on the 'phone to the head superintendent, a man by the name of Nichali, who had charge of the front tool room there, and he came to me one day and said: "Well, John, you have got to go to the Rouge," and I said, "All right."

So, then, I went down to the Rouge, and I was taken over to the foundry tool room, to a man by the name of Mr. Brown who had charge of the foundry tool room, and he said, "You are the man from Highland Park, come out here to take care of this job."

And, I said, "I am."

And, he said, "All right, I will take you out and show you where they are." He said, "We have had an awful lot of **(1014)** trouble on them and we can't get the production on them," and, he said, "I wish you would get right into them and see what you can do to get these things going."

Q. That is the Walcott machine? A. That is the Walcott machine.

Q. That is the time you were removed from the Highland Park to the Rouge? A. Yes. So, I went right into them and in a short while, couple of weeks' time, I had gone over them with the men I had out there, and we got them in running condition, and it wasn't but a month or so that we changed over from what we were accustomed to running —we were running, when we got the machines, with soda water, and I had that changed and had a bracket and pump put on the machine, and run it into oil, and I found from then on after running the machines into oil that I got better results out of them than I did from the other.

Q. How long did you operate those machines, or had charge of the maintenance of those machines, in the Rouge plant? A. Well, I had charge of them as long as they had them up until the time they issued an order to tear all those machines down and to dis-assemble them, and to use the mills that they brought in. They had some mills there. So, they discontinued them, but just exactly when they did that, I couldn't recall. I think it was somewhere around 1927 or 1928. I am not positive. I won't state for sure.

Q. Those machines were dis-assembled by you? A. Yes, sir. We tore all the machines apart and piled them in one corner in, I think it was, about L-6 of the Motor Building. They were all put in a pile, all of them. There were eight **(1015)** slides that went on each machine, and all those 16 machines, I am quite sure were all piled in one pile right in that location. That left just the bed of the machine.

Q. When was that with reference to the time the Pioch machines, or the mills, came in? Was that before or after the mills came in that you tore those machines out? A. No, I think we had one or two of the mills in there then. I am not so sure.

Q. How many of the milling machines did you have in the department on the Model A production, do you remember? A. I think we had about 7; somewhere around there. I am not positive of that. That was mills?

Q. Yes, the Pioch mills. A. Seven or eight of them, I think; right around seven, seven or eight.

Q. Was the change made from the Pioch mills, or rather, from the Walcott machines to the Pioch machines, was that made during the time you were on Model T produc-

tion, or Model A production, do you remember? A. No, that was on the Model A's.

Q. That was on the Model A's? A. Yes.

Q. Now, what was your experience, Mr. Schmidt, with reference to the maintenance on the shapers? Did you have any great amount of troubles in maintenance on these shapers? A. Well, of course, I used to have a couple of men on an afternoon shift, and probably one on a midnight shift, and I had a couple on day shift that worked on the shapers, and they were gone all over from top to bottom as I stated. One machine **(1016)** had to be overhauled about once a year.

Q. How about— A. (Interrupting): Of course, there were little minor things that happened, screws breaking, or something like that.

Q. What was the situation so far as the number of men that had to keep on the job to keep up maintenance on the Walcott machines? A. Well, on the Walcott lathes, when they first came down to Highland Park they smashed so fast down there, and they were constructed so poorly, that the material that there was in them wouldn't hold up for the way they wanted the amount of work taken out of them over at the Highland Park; they had quite a few men, as much as four or five men, probably, on a shift there in Highland Park, and we had, in fact, to re-design a good deal of the stuff all over before we started to get any results whatever.

Q. How long after those machines first came in did it take you to make the necessary changes in material and parts in order to get them running properly? Is that a matter of weeks, or months, or how long was it? A. Well, I would say they came in there in March and—I tell you about five or six months before we ever started to get anywhere near production to what we ought to get.

Q. And yet you got fairly good production within five or six months of operation of those machines? A. Not as much as we would like to have had, but after we made the changes we kept increasing and got better production out of it, after we got to the Rouge. Of course, when you take those slides that was made of cast-iron, and the amount of work that they had to stand up to, they broke a great deal of them, **(1017)** and we came to the conclusion that we were

better off to make them out of steel. We made them out of steel, and we didn't have any more trouble with these slides outside of them scoring and being replaced by bushings that went through these slides.

The Master: How long after the original installation of the machines did you make that change from cast-iron to steel?

A. Oh, I should say about three months.

Q. (By Mr. Farley, continuing): Do you know how long it took you to change all the machines over in those three months? That is, do I understand by the end of three months you had all of the 16 lathes changed over? A. No, we didn't. We had to go gradually along with them. We sent right to Jackson, and we bought a good deal of those slides, we had them make the slides from cast-iron to steel, and we bought eight at a time from them, and I think we paid in the neighborhood of $150 a slide, or $1200 for a set of 8 slides. I think, if I remember right, that was the cost of the steel slides, and the replacement of the cast-iron slides. Just exactly how many sets of them we bought from them, I couldn't tell you.

Q. After you changed over the slides and during the continuous running of the machines up to the time they were discontinued, was there any particular change in the number of maintenance men you had to keep in the department to keep the machines running? I think you said four men, four or five men on the shift, or something of that kind. A. Well, we had between 3 and 4 men on the day shift and afternoon **(1018)** shift, and I think there was about one man, because they didn't have the production, on the midnight. That was called the No. 1 shift. That was in the production department. But, now, that is speaking where they turn the cams, you know, out there; that was the amount of men there. But, in the foundry tool room, when I tore these Walcott lathes down, the stuff was put onto a hand truck and carried over to the foundry tool room and brought over to the bench to tool-makers that we had in the tool room working. I had a couple of men working on the bench and they took these slides apart, cleaned them up, and whatever they needed, if they needed going over or brushing up, new bushings and scraping them up, tapping holes in where the set screws were. That was

taken care of extra besides the amount of men we had out in the production department. There were two men in the foundry tool room.

Q. In the foundry tool room did you have a couple of men on each of the shifts, or just on the day shift? A. No, day and afternoon.

Q. Day and afternoon? A. Yes. And, the midnights, they didn't bother much.

Q. And those men, as I understand your testimony, they would have some trouble with the slides and you maintenance men in the department would yank the slides out? A. And take them out to the foundry tool room and overhaul them, and get them ready, and when they were ready they were sent back to the production department, and when they had any more trouble they transferred them back and forth that way.

Q. You endeavored, I assume, to keep a stock ahead all ready to **(1019)** re-insert? A. We always had between four and five extra sets on hand in order to replace them.

Q. Were you in charge of maintenance in the department, Mr. Schmidt, when the change-over was made from the model T to the model A? A. Yes, sir, I was.

Q. Were there any particular defects experienced when you made the change-over from model T? A. Of course, the model T was a much smaller cam, and they weren't so particular with the hole, I think, in the model T as they were on that model A, and we had a little more difficulties to run into with the model A than we did with the model T, and, I think also, the model A was a much longer cam than the model T.

The Master: Had more of a lift?

A. Yes, had more of a lift. Therefore, we couldn't get the production on the model A that we could on the model T and we had to cut down on the amount of speed on the machine to overcome a good deal of that. If I remember right, I think at the time they had 1,750 R. P. M. motor on that, and I think they cut it down to 1150 R. P. M. motor on there when they changed over from the model T to the model A.

Q. Could you state, or do you know what the average production was per hour that you got off of the Walcott machines on the model T shafts? A. Well, of course, that

came mostly under the foreman of the production stock, because I was around there, and if they didn't get their production I was the one to hear about it, **(1020)** because I would—if the machines were down too long, they couldn't get the production, and they would always jump on me if I held the machine up so that they couldn't get it. So, in that way, if I remember right, the model T's you want?

Q. Yes. On the Walcotts. A. I think they got around 30 an hour or so; around that.

Q. How about model A production, what is your recollection? A. When they cut down that motor down there they didn't get as many model A's as they did the model T's. I think it was in the neighborhood of, probably, 23 or 25 an hour.

The Master: You say they had a 1750 R. P. M. motor on each one of the model T machines?

A. On the Walcott model T, and I think that was cut down to 1150 R. P. M. on the model A. To make sure, I think you can go out to Highland Park and see—I think they got a machine out there now with a motor on it. I think, if I remember right, it is 1150 R. P. M. on them.

Q. Were there any more difficulties so far as maintenance problems were concerned with the machines upon model A production as compared with model T? A. Of course, until they got the forgings right down to what they wanted, the form of the cams on them—that is the size wear-off—they had to keep working these cams down until they got the right shape they wanted, and after they got it exactly the right formation of the cam they wanted, there wasn't as much stock left on them as there was at the beginning, and they didn't have as much stock on there. Therefore, they did not have as much trouble with their tool bits, and didn't **(1021)** wear the machine as much.

The Master: You had three different speeds on the machines?

A. Yes, but two of them, the first and third, we never used. We always used the middle one.

The Master: Both in working on the model T and the model A you never used anything except the middle speed?

A. No. We just used the middle one; it had sufficient force on there; sort of pull it out with a plunger, and you could lower one set of gears up. There were three holes on an angle in the feed case.

Q. If any change had been made in the gears of those machines after they were purchased by the Ford Company from the Walcott Company,—let us refer back to the chain drive from the motor to the head stock. A. Do you mean the sprockets that went from the motor to the drive?

Q. Yes. If any changes had been made of that character would that have come under your supervision and attention? A. Oh, yes. If there were changes on the sprocket I would know about it but there were no changes made.

Q. And, the same would apply to the gears? A. In the feed case.

Q. In the feed case? A. Only replacements as they wore out; that is, a shaft or tooth out of the gear, or something like that. But, the style of the feed, that is the redesign of it, the gear case is just the same as it always was.

The Master: Would you be familiar also with any changes **(1022)** made in the motor from the time the machines were first purchased and installed?

A. In the motor?

The Master: Yes.

A. Any changes?

The Master: Yes.

A. I am quite sure it was cut down from the type T to A.

The Master: Do you know what the R. P. M. rating was in the motors originally furnished with the machines?

A. Well, if I remember right, they didn't furnish any motors at all. I think the Ford Motor Company put the motors in.

The Master: Do you know what motors?

A. I think they bought the 16 machines without any motors, if I remember right.

The Master: Then, what motors were originally put on?

A. I think the Ford Motor Company put their own motors on.

The Master: What was the speed of those original motors, do you recall?

A. I kind of think it was 1750.

The Master: And those motors were kept on until—

A. Until they made the change from the T to the A.

The Master: Were they continued for some time on the A until you found you were running into difficulty because of the excess speed?

A. When we first started we found we couldn't do it because we had too much of a hump on this point of the cam (indicating). It jumped over too much.

The Master: Was the motor changed on all those machines at once?

(1023) A. No. One right after the other. They had to keep the production going, and as fast as they got one down they would bring in another and change that.

The Master: It didn't take much time to complete the change?

A. Just disconnect the chain drive and take out the bolts that hold your motor on the machine, and replace it by the new one. I think, if I remember right, those Walcott lathes cost $3,000. They wanted $3,500 apiece, and the Ford Motor Company didn't give it to them. They put their own motors on for the $500 difference, and they bought them for $3,000 apiece, if I remember right. That is what they told me at the time when they were buying them, what they cost.

The Master: Do you know whether there is any written record kept of the type of motor put on the machines?

A. No, I couldn't say.

The Master: When the motors were changed from the 1750 R. P. M. to 1150 R. P. M.?

A. I don't know of any records at all. When they issued the order, they issued the order to the electrical department, and the foreman that has charge of the electrical department would send the motor down and take the old one off and replace that. That comes under the electrical department.

Q. (By Mr. Farley, continuing): Now, I think you spoke about you were overhauling the shapers about once a year? A. That is the general overhaul.

Q. That is the general overhaul? A. Once a year.

Q. Did you do any similar work to that on the Walcott machines? **(1024)** A. Of course, on the Walcott lathes, you see, they get going all the time; that is mostly on the slides and on that tool-holder bit.

Q. Did you keep any of your Walcott machines down at any time for overhauling? A. Yes. We always kept one of those down all the time; overhauled it while the others were running, to keep them up.

Q. What is the system as far as that particular type of overhaul that you are referring to with the Walcott machines, do you have any—do you get an order from any other department to do that type of overhauling work, or do you get any order at all, or is it done without any order? A. No. We had an order issued once every month to take care of that machinery in that department on the Walcott lathes. Every month there was an order issued to the foreman and he charged his time.

Q. You were the foreman to whom that order would be issued? A. Well, it would be issued to the head foreman from the ordering department.

Q. And the head foreman— A. (Interrupting): To the head foreman in the tool room, and he would pass them over to me, and I would get my orders to take care of them.

Q. And, that was your authorization to put the required number of men on the job to keep the machines running? A. Yes, sir.

Q. And would you be the one that would decide whether or not you would take the machine out of the line for a general overhaul? **(1025)** A. Oh, yes.

Q. Or, would that be one of your assistants who decided that? A. Well, if I was right there at the time and there were any difficulties, we would—the men themselves would get right into that and remedy it.

Q. Do you know Pillinger? A. Oh, yes. He worked for me.

Q. What was his—what did you say, he worked for you? A. He was my assistant. That is—

Q. (Interposing): What was his job in connection with these Walcott machines? A. To keep the machines in running condition.

Q. And, you put him in charge of three or four other men on the shift to keep things running? A. Yes.

The Master: How often would any one Walcott lathe be given a general overhaul?

A. Well, if the sides were sticking, or chips and one thing and another get in between the working parts, we would shut the machine right down and pull the slides right off and put a new set of slides right on. And, in that way they kept right on going.

The Master: Well, that wouldn't be a regular thorough overhaul of the machine?

A. Oh, no. The biggest part of their trouble was in the eight slides that went on the machine.

The Master: You testified that the Ford cam shapers were overhauled on an average of once a year?

A. Yes.

(1026) The Master: That was an entire overhaul?

A. Yes. The whole machine was taken right out of the production department, brought into the main tool room, and everything on it right down to the casting was taken off of it, cleaned and all gone over; new bushings, and new shafts, and—

The Master: You had a similar overhaul of the Walcott lathes at regular intervals, did you not?

A. Oh, we had a couple of them, you see. We always had a couple that we keep changing and taking the parts off, and bringing them over to the foundry tool room, and bringing back the parts that were all gone over, and bringing them back to the foundry and putting them on the machines.

The Master: I think Mr. Pillinger testified that you established the system there of having one machine

down for a general overhaul at one time, and when that was overhauled, replacing that, or installing that for production again, and taking down—

A. (Interrupting): Another one.

The Master (Continuing): —the next most worn machine.

A. Usually that one that has given the most trouble, and take it down and give it an overhauling.

The Master: He also testified, I believe, the overhaul job took about three weeks. Would that be in accordance with your recollection?

A. You mean on the Walcott lathe?

The Master: Oh, yes.

A. Oh, no.

The Master: How long would it take?

(1027) A. Well, of course, are you figuring on the time the men out in the shop and the men in the tool room, the whole business?

The Master: Yes. When you took one of the machines out for overhauling, how long would it be before you got that machine back?

A. We never took a whole machine out. We took the parts out and brought them into the shop for overhauling, and when they were fixed we carried those parts from that machine and assembled them to the machine. There never was a whole machine, a Walcott, that was carried out of the building into the foundry; only the parts that went into the machine.

The Master: Did you have a different type of overhauling system with the Walcott lathes than with the cam shapers?

A. Well, of course, it was this way, there was never any Walcott lathes transferred from the motor building to the foundry tool room.

The Master: There never was any general overhauling, then, or entire overhauling on any one Walcott lathe at any one time?

A. Outside of what was done in the production department. We tear them all down there. But, we never took the machine out; we never brought that over there. We take the over-head shaft, and the cams that are on it.

We took the slides out, replaced the spring that went underneath the machine that carried your slide back and forth, and we took the cam on the side of the machine and replaced any of the worn parts and had them brought in and had them gone in the shop and brought **(1028)** back and put them on the machines right there in the shop.

Mr. Farley (Continuing): Did you have a different system with respect to the Walcott machine than you had with the shapers? I mean, how was it you didn't take the Walcott machines out one at a time and completely overhaul them like you did the shapers? Was there any particular reason for any—

A. (Interrupting): Well, I tell you, on that they never did carry one of them machines out of the production department over into the foundry tool room because the biggest part of their trouble was all in those slides that was chiefly overcome. We could take care of that mostly right there. Of course, when head stock and tail stock and spindles, and that, had to be replaced, we pulled the two heads off, put them on the truck, take them over to the tool room, replace them with new bushings and sleeves, spindles, you know, and re-assemble them back, and when they were in condition, the heads went back, and put them on the table.

Q. Apparently you make a distinction between what you did with the shapers, where you sent them to the foundry tool room for overhaul? A. Shapers never went to the foundry tool room for overhaul on them. They were never carried out of the Highland Park plant. They lifted them right up and took them into the main tool room, and we gave them a general overhauling from top to bottom—the shapers did—but, on the Walcott lathes the bed of the machine never was moved out of the motor building.

Q. I see. A. Only the parts that were on the bed; that is, the spindle **(1029)** heads and steady rests and the overhead cams and overhead shafts, and the minor details that went onto the bed.

Q. Mr. Pillinger testified in order to keep up production he adopted the system there of having, on each day, having one machine down to replace the slides. Do you have any recollection of that? Is that in accordance with your recollection? A. Well, that was a system to change the slides and keep them cleaned up as much as possible, and in that way they were gone over, unless something had happened while they were changing that one, some other machine probably went down, then they would have to jump on that and fix that. Sometimes they would have two or three down there at one time.

Q. There would be times when— A. (Interrupting): Yes, sometimes two or three.

Q. Two or three down at one time for necessary repairs, or you might call them emergency repairs? A. You might be fixing one, and when you were doing that something happened on one of the other 14 machines; while you are doing something on one something happens to the other, and you may have two, three or four, maybe, at a time.

Q. In addition to this replacing the slides, Pillinger also said you made it a practice to keep one machine down for overhaul. Do you have any recollection of that, and do you distinguish between an overhaul where you left the bed of the machine right in position, and the type of overhaul—would that be the same overhaul, generally? A. Of course, they wouldn't pull everything off. It would be a minor job, you know. Where they take everything off and give **(1030)** it a general going over, it would be different. They just—

Q. (Interposing): Did you at regular intervals get around, make the circuit of those machines, and give it a complete inspection, replacing the parts that might be necessary? Did you do anything of that kind in addition to taking care of the emergency repairs? A. Oh, yes. We went right straight around from one to the other, until we got right around.

Q. Was that something like or at all similar to the same sort of thing you did with the shapers? A. Yes. Outside, of course, we did not move the bed of the machine. But, on the other hand, with the shapers, we did; we moved the whole thing bodily right out of there.

Q. I see. Do you know anything at all about the various other operations in the department in addition to the turning of the cams on the shapers—or, rather, the turning of the cam shafts on the Walcott machines and the machining of them on the shapers? Are you familiar with other operations in the Department 410? A. Of course, not to a great extent I wasn't. Of course, they had minor little troubles for fixtures for drilling of a pinhole here that went to the collar of the driver. I take care of those fixtures and line them up for them.

Q. Do you know anything about the straightening operations of that department? A. I know they centered them. First they center them, and then the next operation they had to straighten them in order to get them—in order to turn the cams.

(1031) Q. Do you know whether or not before the cam shafts went to the shapers there was any other straightening operation in addition to the one you just described? A. Oh, there was a straightening operation while they were shaped, and after they hardened them they went through a spinner that we used to have there, and then they straightened them, before they went to the grinder.

Q. Was there any difference with respect to the straightening operations between the machining of the shafts on the shapers and the machining of the shafts on the Walcott machines? A. Well, on the Walcott machines, I don't know, they seemed to have a tendency more so to spring than they did on the shapers, and you had to watch that a whole lot closer in order that when they went to the grinder they were straight enough so that they could clean up. Otherwise, they would have too many scraps on them.

Q. The question was, was there any difference, if you know, between the use of these two machines with respect to the straightening operations that were used before the machines went—before the shafts went to either the shaper or Walcott machines? A. I know they had to keep them closer—straighten them on the Walcott lathes—than they did on the shaper.

The Master: Did you say it was your recollection with the shaper there was a straightening operation after the rough turning and before the grinding of the cams?

A. After they came from the hardening furnace.

The Master: After they had been hardened?

A. Yes.

Mr. Farley: I think that is all. You may cross examine.

(1032) Cross Examination by Mr. Spohn.

Q. Mr. Schmidt, I understood your testimony to be that when you moved over to the Rouge plant from the Highland Park plant you took all these Walcott machines over to the Rouge plant. That is right, isn't it? A. Yes, sir, they shipped them all over there.

Q. And, in the meantime you set the shapers up in the Highland Park plant? A. Just to keep the production up.

Q. Just to keep the production up, and those shapers run for a couple of months over there before you got the Walcott set up in the Rouge plant? A. The shapers were put up again at the Highland Park plant.

Q. Yes, and they were run in the Highland Park plant for a couple of months? A. But, they shipped two shapers down to the Rouge plant in case they should happen to have to fall back on them. There were 2 shipped down there.

Q. But, the rest of them that were left in the Highland Park plant, they were kept in operation until you got the production you wanted— A. (Interrupting): Yes, sir.

Q. (Continuing): —on the Walcott machines? A. Yes, sir. They were kept at Highland Park.

Q. And about how long was that? Two or three months, you said, that those shapers operated at the Highland Park plant after the Walcotts had been taken over to the Rouge plant, yes. A. Just about, yes.

* * * * *

(1034) RUDY EHRHARD HERKLOTZ was thereupon called as a witness, and being first duly sworn, testified as follows:

DIRECT EXAMINATION by Mr. Farley.

Q. Are you the same Mr. Herklotz who testified in the proceedings before Judge Tuttle? A. Yes, sir.

Q. You are employed by the Ford Motor Company, Mr. Herklotz? A. Yes, sir.

Q. How long have you been employed by the company? A. 25 years.

Q. 25? A. Yes.

Mr. Spohn: 25?

A. 25, yes.

Q. What is the nature of your duties at the Ford Company? A. I started out as a die maker and later on I had charge—went to pattern work for a while, and then I had charge of ordering machinery.

Q. What department are you now in at the Ford Company? A. The engineering department.

(1035) Q. Engineering purchasing? A. Engineering purchasing.

Q. Under Mr. Kellogg? A. Yes, sir.

* * * * *

(1055) Q. Now, I show you a number of sheets, permanent inventory of machine tools, which have been marked Exhibits 246-A to R, and will ask you what type machines those permanent inventory **(1056)** cards refer to? A. The sheets refer to a machine for shaping the cam shaft, or a cam shaper; it will shape all eight cams at one time.

Q. These are regular records of your department? A. Yes, sir, they are the permanent inventory records.

Q. And they contain the same type of information as the Exhibits Y-1 to 24, that we were just talking about? A. Exactly the same.

Q. And will show just exactly what happened to the machine and when it was received? A. Yes, sir.

Q. And where it was located and all that sort of thing? A. Yes

Mr. Farley: I offer those permanent inventory cards in evidence as Exhibits 246-A to R, inclusive. I assume there is no objection.

Mr. Spohn: No objection.

The Master: They may be admitted.

Q. Now, I think, to save time, and it will be convenient here, have you prepared a list showing the date of acquisition of these particular machines and the date when they were salvaged, from these records? A. Yes, from these records, Ford cam shapers.

Q. Can you by reference to the list state briefly what the facts were concerning the dates, when you got those machines, and the dates when they were salvaged? A. You want me to read them off, each one of them?

Q. I think we can save time that way? **(1057)** A. Two were received in 1915, three in 1916, seven in 1917, two in 1919, one in 1923, and four in 1924.

Q. So far as the disposition of the machines now, can you state when the history shows that? A. 11 were salvaged in March '25.

Q. March or January? A. January, '25.

Mr. Spohn: January, 1925.

A. Yes.

Q. What does the record show as to the first machine? A. The first machine?

Q. Acquired 10-28-15, when was that one salvaged? A. That was salvaged December 1st, 1922.

Q. Now, then, how many machines all told are covered by— A. By the salvage?

Q. No, by the entire list, how many cam shapers did you have? A. 1, 2, 3, 4, 5, 6, 7, 8, 9, 10, 11, 12, 13, 14, 15, 16, 17, 18; but here the last four I think will show right on this list here, they were never put into production. Here we have a note on there, that they were cancelled by Mr. Wibel's department at that time. There was only 13 on production.

The Master: Just a minute. You have not completed your statement as to the salvage?

A. 6 shapers were salvaged.

The Master: On different dates in '26?

A. In '26, in August, '26.

The Master: I noticed that you said these machines, or those machines that were salvaged in '25,

were on January, '25. **(1058)** Some of them were on March 16, 1925, just to correct the record on that.

A. Yes. Shall I read them off?

Q. No. What does the record show concerning the last date when any of those shapers was available? A. The last shaper—this will show here on these shapers here, the last four of them never were in operation, there were only 13 in operation. This was here in '25.

Q. That is January 1, 1925? A. Yes.

The Master: The last four or the last five were never in operation?

A. The last five. 13 were in production.

The Master: These 13 did not include this first machine which was salvaged in '22?

A. No. There is another one down here. That makes that 13. There was one salvaged here. That makes the 13 shapers.

Mr. Spohn: What was the answer to that question?

Mr. Farley: He says that makes it 13 shapers.

The Master: 13 shapers in operation as to what time?

A. That would be from this time to here.

Mr. Spohn: Was it four or five shapers that were never put into production or were available in 1925?

The Master: That was my question, and I think your answer was there were four shapers that were never put into operation, was it not?

A. Yes.

The Master: And when you said there were 13 in production, **(1059)** you were excluding, in addition to these four, the first machine which was salvaged in '22?

Mr. Spohn: That ties up. It was four, then, that were never used?

* * * * *

(1063) The Master: Referring to these last four machines which were acquired in 1924, I am not quite

clear why these are shown to have been salvaged in 1925 and 1926. Does that mean that the order was cancelled on that?

A. Yes, the order was cancelled, but the machine had been partly finished; some of them may have been almost finished.

The Master: Were the unfinished machines delivered to the Ford plant?

A. I don't know. I think there was a work order made out on that. **(1064)** They were made on a Ford work order. They were made at the plant. They must have been half or three-quarters or partly finished, when the order was cancelled, and a brass tag assigned to it already. Let me see that 34,312? What does it say on that. 9-26-24.

Mr. Spohn: If the Court please, was that last question of yours answered? I did not quite get it. I think there was some confusion. I think Exhibit O will clear it up, if your Honor will refer to it. Mr. Farley, I think this will clear it all up. Exhibit O. This is a letter of the Ford Motor Company to the Jackson shapers:

"Confirming our telephone conversation of the 11th, you may use this as authority to proceed with five special machines for shaping cams and so forth."

This is dated December 12, 1932.

"As explained to you, we are building in our tool room four of these machines in addition to this order for five."

Mr. Farley: Oh, yes.

Q. Then these last four machines that are listed, apparently—it says so quite clearly on the permanent inventory, each of them says manufactured by the Ford Motor Company, that is correct, is it not? A. Yes, sir.

Q. So, then, those machines covered by these Exhibits 246-O, P, Q, and R, have no relation to the cancellation of the order noted on the Exhibit 248? A. You mean this note on here?

The Master: There might be a cancellation of a departmental order.

(1065) Mr. Farley: It says special tool and fixtures. It says five.

A. That is when it was ordered, when Wibel ordered these machines to be made, and then his department, the tool design, issued the order 11-26-23 to build those four machines. I don't know who made these here, if those were actually built at the Ford Motor Company or if they were built on the outside. It looks to me as if they were built on the outside, because it says here order. It must have been outside, because there is the order D-48697 issued 1-18-24.

Q. And then there is a note under here? A. Four special Ford cam shapers, communication to Emde.

The Master: So the list that you have here, Exhibit 247, refers not only to shapers that were actually in the plant and used on production, but the additional five shapers which were being ordered outside and the four shapers which were being made in the shop, and for these last four, you have the brass tag numbers, but no brass tags for the other five?

A. For the ones made at the Ford Motor, yes.

* * * * *

(1068) Q. You used these milling machines covered by the permanent inventories 249-A to 249-G for the production of the Model A camshafts, did you not? A. Yes, sir.

Q. Could you use those machines for the production of the V-8 camshafts? A. No.

Q. What did you do when you started the V-8 production, what kind of machine did you use? A. Well, a machine similar in principle that we used for the Model A, what we called the Pioch machine.

Q. You used these machines that were first referred to, when covered by these permanent inventory cards, as the Pioch machines? A. Yes.

Q. And all through these proceedings? A. Yes.

Q. That is how they were known in the plant? A. Yes.

Q. You could not use those machines on the V-8 shafts?
(1069) A. No.

Q. Did you use the Pioch machines on the V-8 shafts?
A. Yes.

Q. Then what did you use when you got to the V-8 production? A. Those machines that were used on the Model A, they were salvaged, and the new Pioch machine was built around the V-8 camshaft. At that time it was known as the 18.

Q. How many machines did you use on Model 18 camshaft, Pioch machines? A. On 18 we used ten machines in sets of five. There was required two machines to complete the operation, but they were designed around the same principle as the Model A.

Mr. Farley: I might state at this time for the record that we did not produce the permanent inventory cards for the V-8 Pioch machines, but this list was prepared from the inventory cards, and we can readily produce those, if counsel would like to have them to check them, or for any other purpose.

Q. That is, ten additional Pioch machines were built for the V-8 job, and the Pioch machines that had been used on the Model A, which could not be used for the V-8 shaft because of the difference in the shaft, were salvaged?

Mr. Michael: When was the first new machine purchased?

Q. Will you refer to that? A. On the Model A?

Q. No, the Model V-8? A. The first machine was in May 24, 1932.

The Master: May 24, 1932?

A. Here is another one earlier. May 4, 1932, the first machine. **(1070)** Those two machines go together, to complete the shaft, two machines to one set.

Q. When you changed from the Model T to the Model A production, were any of the camshaft shapers available? The date of the change from the Model T to the Model A, that was in December, 1927, is that according to your recollection? A. No, there were no more shapers available. They were already salvaged.

Q. Could you have used shapers if they had been available, the Model T shapers, if they had been available, for the Model A shafts? A. No.

Q. Suppose you had wanted to use shapers for the Model A shafts, what would you have done?

Mr. Spohn: Just a minute. I think the witness answered the question.

The Master: He said you could not use them for the Model A and now you ask, suppose you wanted to use them.

Mr. Farley: Not the same shaper. I said suppose you wanted to use shapers.

(The question was read.)

The Master: You are amplifying your question so that it does not refer to the particular shapers used on the Model T.

Mr. Farley: Yes.

Mr. Spohn: The question now is shapers other than the shapers heretofore used on the Model T.

(1071) Q. Let me put this question: What did you do in the Ford Motor Company, Mr. Herklotz, when you changed from one model to another, and I am going to refer you now to just what you did do when you changed from the Model A production to the V-8 production, and referring particularly to the Pioch machines, I asked you a while ago did you use the Pioch machines that you had used on the Model A for the V-8? A. No.

Q. Then what kind of machines did you use on the V-8? A. We also used the Pioch machine on the V-8, but that machine was designed or re-built to machine the Model 18 camshaft.

Q. In other words, when you changed from the Model A to the V-8 production—in the first place when you designed the Pioch machine for the Model A production, that machine was intact, designed around the shaft, wasn't it? A. Yes.

Q. To build that particular shaft? A. Yes.

Q. As far as the Model T shapers were concerned, were they also designed around the Model T shaft?

Mr. Spohn: Just a moment, I think that is leading the witness pretty far along there on testimony of this type.

The Master: This is a very important branch of the game. I think you ought to be as careful as possible not to lead the witness at this point. Read the last question.

(The question was read.)

Mr. Spohn: That is going too far. I object to the question.

(1072) Mr. Farley: All right. You can strike the question.

Q. Will you state, if you know, whether the practice in designing the Model T shapers was any different from that in designing the Pioch machines for the Model A shaft?

Mr. Spohn: If you know of your own knowledge, now. May I have a preliminary question on this?

The Master: Go ahead.

Mr. Spohn: Were you with the Ford Motor Company when the shaper machines were designed?

A. I was with the Ford Motor Company, but not in the capacity I am now.

Mr. Spohn: What capacity were you then in?

A. I worked as a tool maker, then.

Mr. Spohn: Did you know when the camshapers were designed, what year?

A. I know they were designed in 1915.

Mr. Spohn: Are you sure of that?

A. Yes.

Mr. Spohn: Is it not a fact that they were designed about '12 or '13?

A. Well, I would not know the year exactly. It was about that time.

Mr. Spohn: I object to the question, no proper background, knowledge or information on behalf of the witness.

A. The records show the date.

Q. Are you familiar with the shapers? A. No.

Q. That is, have you ever seen the shapers? **(1073)**

A. Yes, I know exactly what the shapers will do and

what they were designed for, I know exactly what they do.

Q. And what were they designed for? A. Designed for the Model T camshaft.

Q. Could they be used for any other purpose? A. They can be used if they are re-designed.

Q. Now, you testified before Judge Tuttle and you were asked certain questions, and I am going to read that testimony to you. I am reading, beginning at the bottom of page 565 of the original transcript, and this question was asked you:

> "Q. Now, did you know enough about the cam shapers that were used for the Model T camshafts to know whether those could be used for machining instead of rough grinding the cams on the tractor camshafts like Exhibit 35?"

And you answer:

> "A. The cam shapers could not have been used in the tractor camshafts for machining the cams, rough machining."

Do you want to change that answer, or is that— A. The shaper could not have been used on the Model F, that is, the tractor camshaft.

Q. And you were asked the question: "Why," and you said:

> "Because, on account of the design; on the Model T, the bearings are about the same size as the cams; on the tractor camshafts, they are not. You have an interference here; in fact, interference on the three bearings."

The next question was:

> "Q. On the center bearing of the tractor camshaft, as well as the end bearings, you say there would be an **(1074)** interference?"

Your answer was: "Yes, sir."

Next question:

> "Q. That was because the bearings on the tractor camshaft were very much larger than the diameter of the shaft itself? A. Yes, sir.

"Q. And as shown by Exhibit 34, the end and middle bearings were not much different in diameter from the rest of the shaft?"

And you were referring to this exhibit Model T camshaft when you were testifying there, is that correct? A. Yes, sir.

Q. And your answer to that question:

"Q. As shown by Exhibit 34,"

Your answer was:

"A. Yes, sir."

And the next question:

"Q. Now, explain to the Court why that difference in shaft design would make it impossible, as you have said it was, to use the shapers?"

And your answer was:

"A. On the shaper, the tool was used with the cutting point representing like the pencil here (illustrating), and was about, I will say, about one inch wide."

Probably you could illustrate that as I read it to the Court.

"The width for that. Still we could re-grind these tools, keep on grinding them back, and that was back where **(1075)** it had no room to get down here at all. Besides, you know, even if there was, even if we had used a very narrow tool, it was impossible, because the stroke was necessary to go across here, in order to start on the front of the cam as we had to go back as far as this."

You understand that, or do you want the witness to explain that further?

The Master: I think I understand it.

Q. "Q. And go back on the main bearing? A. The main bearing.

"Q. And that would have cut the main bearing, and that is the reason you could not use those camshaft shapers in place of the rough grinders on the tractor shaft? A. Yes, sir.

The Court: And therefore, you did use what?

A. We used a rough grinder."

The next question:

"Q. What kind of camshaft was used on the Model A?"

Mr. Spohn: Now, where are you reading from?

Mr. Farley: This is Mr. Herklotz' testimony from page 592 of the transcript, as you quoted it to him there.

"Q. What kind of camshaft was used on the Model A? A. What kind of camshaft?

"Q. Yes. A. This is the camshaft for the Model A (indicating).

"Q. Exhibit 29."

And you were then referring to the exhibit which you now have in your hand, Exhibit 29. The question is:

(1076) "Q. 29. Now, was this possible to take that off the shaper? A. No."

Then Mr. Spohn read further. Referring now to page 611:

"Q. Why couldn't you turn or cut the Model A cam shaft on the shapers that had been used on the Model T shaft? A. There is the Model A and that is just about the same design as the tractor cam shaft, and for the same reason, on account of interference of these bearings. Now, the tool would have to go back here, and it had to come back here (indicating), and it just would simply take this part of the bearing off.

"Q. Abut against the enlarged bearings on the end of the cam shaft? A. Yes.

"Q. And that was the only reason why the shaper for the Model T cam shaft like Exhibit 34 would not operate on the Model A cam shaft or on the tractor cam shaft?"

And your answer was:

"A. Yes, sir."

A. Yes, sir.

Q. Now, after hearing all of that testimony that I read to you, is there any change or correction you would like to make in any of it? A. Yes.

Q. Now, just a minute.

Mr. Spohn: Now, if your Honor please, the witness has said yes.

The Master: I have not heard the next question yet so **(1077)** there cannot be any objection until it is asked, at least.

Q. Are there any of those answers which you gave at that time which you would change in any respect right now? A. No, they were correct.

Q. What is the nature of your— A. Would you let me say something in regard to that answer? I was asked then—

Mr. Spohn: Just a moment. I reserve the right to move to strike this.

The Master: All right. I will hear what he wants to say, and then I will entertain your motion.

A. I was asked if the shaper on the Model T cam shaft could be used as well as on the Model A. I said no. That is all I was asked. I was not asked if that shaper could be re-built in making this Model A cam shaft, and which can be very readily done.

Mr. Spohn: Just a minute, now. We have no objection to that answer.

The Master: Suppose you had small size bearings on the Model A like you did on the Model T, but there was simply a difference in the size of the cams and the size of the shaft, so that the shaft was—or the relative sizes between the bearings and the cam was the same in the Model A and the Model T, except both were larger than the Model A, and you had been asked the same question, whether the Model T shaper could have been used in turning the Model A cams, what would you have said?

A. If these bearings had been the same diameter as this one here, if the shaper could have been used?

The Master: If the bearings would have been a larger diameter **(1078)** and the cams a larger diameter than on the Model T but the same relative size?

A. Then the shaper could have been used.

The Master: You would have had to make some re-design of the tools?

A. Just to raise them up. If the relation between the cam and the bearing was the same, in principle, the shaper could have been used with some alterations, some slight alterations by just raising the tool up higher.

Q. Suppose, Mr. Herklotz, you had made a change in the Model T production, and, without changing the shaft in any other manner, had changed the spacing of the bearings,—let us say, consider that we shortened the shaft up about 6 or 8 inches, could you have used the Model T shapers if you had them, on the shaft so changed? A. If the bearings had not been changed in relation to the cams, we could have used the shaper, as long as there was no interference in between, so that we could get the tool in between the spaces of the cam.

Q. Well, suppose you changed the size of your cam shaft to such an extent that, with your shaper tools as you had them, and the spacing of the shaper tools, so they would not fit the spacing of the cam, could you have used the shaper? A. We would have had to build a different shaper around that particular cam shaft.

Q. Is that a practice that is followed at all, to your knowledge, in the Ford Company, building machines and changing machines as you change from one model to another, and building a machine around the part to be produced—is that anything unusual? **(1079)** A. No, nothing unusual at all. We do that every day. In fact, I might say we will specify or order or re-design or build probably two or three machines of that nature a day.

Q. When you changed over from the Model T to the Model A production, do you have any idea how many new machines you had to rebuild because of that change? A. Well, without really thinking it over—

Mr. Spohn: I object to the question as incompetent, irrelevant and immaterial. We are not here on the V-8 production.

Mr. Farley: I am not talking about the V-8. I am talking about the Model T and the Model A.

Mr. Spohn: What was the question?

(The question was read.)

Mr. Spohn: Withdraw the objection.

A. I would say in the neighborhood of a thousand machines.

Q. Most of those machines purchased, as far as any new machines were concerned, that all went through your hands? A. Yes, with the exception of the 18 Z machines, which usually come through the mechanical design.

Q. You had personally a considerable amount of experience with the Gordon machine that was attempted to be used in the Ford plant, did you not? A. Yes, sir.

Q. And did you find that machine worked satisfactorily? A. Well—

Q. The Gordon machine? A. Well, we tried very hard to make it work. I think we had it in the plant for about three months. We could not make it work, and it was decided to send it back and have it gone over, and **(1080)** it was returned about four months later, and it was still the same, we could not make the machine work. It probably took a week to tune up the machine, and we could probably run it for one hour on production, and then it was down again. I would say if the machine would have done the work or had a possible chance of doing the work, we possibly would have bought all Gordon machines.

Q. In other words, if the Gordon machine had been a satisfactory machine for your purpose, you would have ordered all Gordon machines? A. Yes, sir.

Q. Now, did you have anything to do with the operation of the first Walcott machine that was brought into the plant? A. Yes.

Q. That was bought for the tractor production? A. Yes, sir.

Q. How did that machine operate on the tractor production? A. Well, the machine showed a much improved way of performing.

The Master: Improvement over what?

A. Over the Gordon, over the Gordon cam shaft lathe.

The Master: Did you try to use the Gordon machine on the tractor production?

A. Yes. It was bought for the tractor, the first Gordon machine was bought for the tractor production.

Q. Now, about what was the production you got with the Walcott machines on the tractor cam shaft, pieces per hour, as you recall? A. Around 25.

(1081) Mr. Farley: We were required by the Court here to file answers to certain questions, and we were asked to state what methods and means had been employed by the Ford Company just immediately prior to the acquisition of the Walcott machines, before we bought the Walcott machines, and we answered that by saying that we attempted or we used—well, I will read the answer that I prepared after talking with you about this matter.

"The method and means employed by defendant immediately prior to the adoption and use of the infringing machines for reducing to finished size the rough forged cams of tractor cam shafts were:

"First, a roughing finish performed by (a) a Gordon lathe as disclosed in Plaintiff's Exhibit 2, patent number 1,542,803 to Charles Gordon and Alfred W. Redlin, and (b) a rough grinding operation in which the excess material was removed by means of a Landis 10-X-36 grinder."

Q. Now, you recall the Gordon lathe, and I will ask you to look at the views of the Gordon patent, number 1,542,803, which is an exhibit here. Plaintiff's Exhibit 2? A. You ask what we used prior?

Q. I want first to ask you: Do the drawings of this patent correctly represent the Gordon machine and as you remember the machine that was in the Ford plant? A. Yes, I remember the machine just as it is represented here, the way it was in the Ford plant.

Mr. Farley: I won't go over all this statement of the operation of the machine which is reproduced in our paragraph 36 **(1082)** of our statement of account, because I think most of that Mr. Gordon admitted. I will read this part, however:

"The mode of operation of the Gordon machine was to oscillate the tool about its cutting point as a center for the purpose of maintaining the side cutting edge of the tool substantially normal to that portion of the work with which the point of the tool at any instance came in contact."

Q. That is the way that machine worked? A. Yes.

"Due to the swinging of the tool upon its point, it was necessary that the cam 44 be designed to swing the tool holder 34 through an angle of approximately 80 degrees while the work was turning through an angular rotation of 6 degrees."

Is that correct? A. Yes, sir.

Q. "Because of the impossibility of effecting a movement of approximately 80 degrees on the work holder 34 during but 6 degrees of movement of the work shaft, it was impossible to control the movement of the cutting tool and to keep the roller 53 in contact with the cam 44 as the tool was passing around the nose of the cam shaft, the roller dropping through space without touching the master cams, while the tool was going around the high point or nose of the cam."

First, will you state whether that is a correct statement of what happened in the operation of that machine at the Ford Company?

* * * * *

(1083) Q. Can you illustrate just what you had in mind when you testified to that effect before Judge Tuttle with this particular model, particularly with respect to the impossibility of effecting a movement of the tool around the nose of the cam and about the roller dropping through space.

The Master: Before you do that, I am not just quite clear what you personally had to do with the Gordon machine when it was on trial in the Ford plant?

A. What I had to do with the machines?

The Master: Was it on demonstration?

A. Yes, I had charge of all special machines. I was instrumental in recommending the Gordon machine for turning cams on the cam shaft.

The Master: And while it was there you observed its operation?

A. Watched its operation, and tried to make the machine do what it was supposed to do.

Q. I might bring out, witness, the fact that that was a regular part of your duty, when you ordered a special ma-

chine, particularly **(1084)** if it is a machine of a type you have not purchased before, do you make it a practice to go into the shop and observe the machine in operation and see whether it is doing the job or not? A. Yes, and if it does not, we work together with the manufacturer and we furnish men, mechanical, to improve or make changes, in order for the machine to stand up on production. In this particular case, I remember very distinctly these springs—

The Master: Spring 59.

A. This spring here, 59, because it had to travel so far—the spring was quite short, but it had to compress almost solid, and it kept on breaking continuously, and as soon as the spring broke, the tool would not follow the cam no more, and it just broke the tool. Another case was that this cam here, there were eight cams—

The Master: You are referring to the master cam marked 42?

A. Marked 44. They were just being marked with one key way. The cam was quite narrow, the key way, these cams have to be very close in relation to the position of these cams on the cam shaft. First of all, they had that key way about in there (indicating). Then, instead of having the cam where it could really be, the cam should be here, in here the cam was over here (indicating); and we were taking off on this side sometimes 3/16ths to 1/4 of an inch, and over on this side we would be missing by a sixteenth of an inch. We did not have enough stock over here (indicating). That was the principal trouble with the machine, the wearing out of these key ways, **(1085)** getting the location of the position of the cam, and breaking this spring. We just simply could not keep it up.

Mr. Farley: Now, I think, in order to save time on this, if your Honor please, I will ask the witness during the recess, and it is getting close to recess time now, I will have him read this, the answer to this account, and then I will ask him when he comes back on the stand to state whether or not he would like to make any corrections to the tabulations and so forth that I prepared. I had to rely upon his testimony and conferences had with him, because I used his experience with the machine in preparing these particular answers.

Mr. Spohn: Does that mean that the witness is going to read, during the recess, answer 36.

Mr. Farley: I am referring to all questions directed to us. I think they run from—

Mr. Spohn: Which numbers?

Mr. Farley: 35 on to 44, inclusive.

Q. One or two more questions. Were you familiar with the operation of the Walcott machines on the Model T job? A. Yes, sir.

Q. What, if any, was the experience or difference in experience between your use of the Walcott machines on the Fordson shafts as compared with the Model T shafts? A. Well, on the cam shaft—the Melling or Walcott cam turning lathe they showed very much improved design on the possibility for production, but I would say, only, that machine could be used on small production. On account of the nature of all these mechanical and moving tools, it really was not a machine **(1086)** for big production. I would say for maybe 500 a day the machine was okay, but for real heavy production, that machine is really a failure, for big production.

Q. The machine worked fairly satisfactorily for the tractor? A. For small production.

Q. What was the tractor production? A. From 400 to 500 a day.

Q. What was the Model T production? A. The Model T production in those days was 8,000 to 8,500 a day.

Q. Were you in a position to know whether or not the use of the Walcott machines proved to be more costly than the machining of the shafts on the shaper?

Mr. Spohn: Now, at what time?

Q. At any time?

Mr. Spohn: Just answer that question yes or no.

(The question was read.)

Q. I will make it read: More costly or less costly.

Mr. Spohn: At any time.

The Master: Are you in a position to so know?

A. It was more costly.

Mr. Spohn: I move the question and answer be stricken.

Q. Wait a minute. You have to answer first whether you are in a position to know whether it is more costly? A. Yes, I am.

The Master: And you state now it was more costly?

A. Yes.

Q. Do you know why it turned out to be more costly? A. Because the machine was built, as I said before, really for small production, and in order to push it for heavy production, **(1087)** everything had to be built out of tool steel, and with all the sliding movements, so many joints and movements, the machine simply would not stand up.

Q. Now, you used those machines for the period from 1925 until 1931, about six years? A. Yes.

Q. Why did you use the machines so long if they would not stand up? A. Well, it took a long time to find out and just see if we could improve the machines. The machines came in there with machine steel and cast iron slides, and we tried to improve the machine by making the slides out of machine steel, carbonized and hardened. Then we made them out of high speed steel. And then we had salvaged the shapers already, and we really were obliged to use the cam lathes for production, and keep up the expensive repairs on those machines.

The Master: Then in 1929 you got around to considering the purchase of more machines to do the job, and you did not turn back to the shaper, but you bought more Walcott machines?

A. No, because we turned-rough and semi-turned the cams; in order to get less stock for the grinder, we had to buy six more additional machines in order to take the third cut, to get the camshaft down to size.

Q. When you bought the machines in 1929, you had not scrapped any of the original Walcott machines you had? A. No.

Q. Whereas, if you had gone to the shaper, what would you have had to have done in 1929? A. If we had gone to the shaper in machining those of the Model A?

(1088) Q. Yes. In 1929 at the time you bought the six additional Walcott machines—do you follow that? A. Yes.

Q. Now, suppose at that time when you were on the Model A production you had wanted to go to shapers? A. Yes.

Q. What would you have had to do? A. Well, we had to re-design, re-build the shapers to take care of the Model A shaft.

Q. Then, what would you have had to do with the Walcott machines which you had? How many Walcott machines did you have at that time? A. We had 13—no, 16 we had, 16 Walcotts.

Q. And you bought— A. —six more.

Q. Six additional? A. Yes.

Q. Were you getting out your production at that time with the 16 Walcott machines? A. We were getting out production on the Walcotts all right, but we could not get production out of the grinders, because we would leave too much stock on the cams. That is why we bought the six additional Walcotts, to reduce the stock, so we could get the production out of the cam grinders.

Q. Do you have any recollection of what the Model A production was in 1929,—was it a very high production? A. 1929, I think we made around six thousand or a little better.

Q. A day? **(1089)** A. Yes, sir.

The Master: Well, why could not you have bought in 1929, say, six shapers and used them side by side with the 16 Melling machines, if you had not had such a load on the Melling machines, so they would have done the job better and taken off more stock—wouldn't they?

A. Well, from what I know now, from the Walcott lathe, that is what we should have done; we should have gone back to the shapers.

The Master: Were these Melling machines that were purchased in 1924 pretty well worn out by 1929?

A. Oh, yes. In fact, we had to re-build them all before they really would stand up on production.

The Master: Is that the reason they would not take off enough stock because of their worn character?

A. Yes, it is the nature of the design, the machine had so many joints.

Q. (By the Master): Did you put new machines in service at that time, with these new machines, for example, would they take off enough stock without using a third rough cutting operation? In other words, what I am getting at, was the reason that the machines in 1929 would not take off sufficient stock, and the reason why you had to purchase six additional machines for a third rough cut operation, was it because of the fact that the machines which were purchased in 1924 were so badly worn by 1929, or was it because of inherent difficulty in the machine itself? A. No, it was just the design of the nature of the machine, the springy design of the machine, it would not take a sufficient **(1090)** amount of stock off.

Q. Do you mean by that it would not take sufficient stock off all around the cam, or that it would leave stock at points in the cam? A. It was too springy. All these different joints, they kept multiplying it. I will explain it a little more. When we would start with a cut on the machine, we started here. Now, before the tool really came down to this size, it used to come up, I might say, a hill, and all the play was taken out of the machine, through the tension of the cut on the front, when it finally came down to this size. So when we started out, we started out about a thirty-second smaller in diameter, until the pressure or the backlash of the different joints in the machine was taken up, and the tool started to cut its regular size, and which caused that we always had really to start with a tool so much smaller in diameter, so it would remove this stock that it should remove according to the gauges. When it came up here with the tool, this tool here in going across here, the tool really had to start a little lower first, and gradually you were building up tension and tension, and then it finally went across, because there was so much backlash in the different joints before we got to the tool.

The Master: What you are really saying, in answer to Mr. Farley's question, is that there was excess stock left all the way around the cam, and not just at particular places, is that right?

A. All the way around the cam, the shape of the cam.

Q. Can you tell by looking at that particular shaft—have you **(1091)** looked at that tag? A. No, I have not.

Q. Can you tell by looking at that shaft, how the cams were machined, on what machine they were done? A. It looks like they were done either on the Melling or Westinghouse method, I don't know, I could not say from here. It looks to me—no, I could not say.

Q. Now, you spoke of having to overhaul the Walcott machines, and I will show you a bunch of papers, some of which have been marked, I don't know whether all—yes, they have been marked Exhibits P-1 to P-14. Can you state what they are? A. Yes. 619,276 was moved from the K motor building—

Q. Just a minute. First I want to know what they are. They are working orders of the Ford Company? A. Yes, working orders issued to do certain work on machines.

Q. I notice that this first one, which is marked P-1, has your name, "R. Herklotz"? A. Yes, sir.

Q. Is that a work order issued by you? A. Yes, sir.

Q. And there are a number of them all clipped together here in that particular exhibit. Without reading all of them there—first let me ask what particular machine does it refer to? A. You mean the brass tag Melling,—Melling cam 35472, overhaul for A-4260. That is the Model A camshaft.

Q. All of these slips that are clipped together here—is that the way you filed those in your department? A. These are general work orders. On these sub-orders, they are **(1092)** made out on what the fellows sign when they take the machine apart.

Q. The parts to be replaced and that sort of thing? A. Yes.

Q. How about this tabulation apparently done on some sort of adding machine? A. This has to be done by the accounting department, because they are getting a copy of the order.

Q. That is a tabulation made by the Ford Motor Company accounting department? A. Yes.

Q. That is intended to show the costs of all the work sheets in the clip? A. Yes, sir.

Q. Is that also true of each and every one? A. Yes, sir. This one refers to cam lathe 36592.

Mr. Farley: In view of the fact, I believe there was some objection to certain computations and costs prepared by Mr. Woehrle, and for which these are the basis, I offer these in evidence now as Exhibits P-1 to 14, inclusive, as records from Mr. Herklotz' department, having to do with overhauls of these particular machines?

Mr. Spohn: No objection.

The Master: They are all admitted.

* * * * *

(1093) Q. You were asked to read, Mr. Herklotz, during the recess, the text of the answers 36 to 43, inclusive, of Defendant's first statement of account, which is Exhibit A in these proceedings. Have you read over that? A. Yes, sir.

Q. I think you have already testified that you were familiar with the operation of the Gordon machine in the Ford Company's plant? A. Yes.

Q. And, now, do the statements as contained in those paragraphs which you read in this Exhibit A correctly recite the facts, as you know?

Mr. Spohn: Objected to as incompetent, irrelevant and immaterial, not within the issues.

The Master: I will overrule the objection.

Q. (By Mr. Farley, continuing): And, the answer is? A. They are correct.

* * * * *

(1096) Q. In your position you knew of some of these, and you have already testified about the difficulties you had with the Walcott machines on the Model T production, on the high production? A. Yes.

Q. Are you aware of the fact that the Ford Motor Company has a time study department, and that they send men out with stop watches to time the operations? **(1097)** A. Yes.

Q. You know about that? A. Yes.

Q. Now, which is the more accurate record, Mr. Herklotz, assuming that your time study men make a time study observation, clocking the man on the machine, which

will give the more accurate record of production, the records of the time study men of the time study sheets or the operation sheets such as this Exhibit 154-B, which you prepared in your department? A. The time study would show lots closer than the operation sheet, but the man on the time study, he only can watch the machine; suppose he watches the machines for one hour, he can't get an average. The machine runs 10 or 24 hours a day, and over that average we get lots less than what we will get, or get when a man stands right there and watches.

Q. Assuming you have a time study that was made in October of 1924, at which time these Walcott machines had been in use for some six months, and had turned pretty nearly a million shafts, would the time given at that particular time study be varied during the remainder of the operation on the Model T shafts? That is, would it, if there would be any variation, would you say that there was anything about the machines, as such, that would in the continued operation in the next three or four years, cause the machines to turn out more shafts per hour or less shafts per hour, or just what would the condition there be? A. Well, from my experience I can say that we were getting less than the time study shows for one reason, as the machines were getting older, and trying to keep them in repair, they got so out-of-joint, it was absolutely impossible to get the production **(1098)** we should be getting. That is the reason we had to buy six more machines to come anywhere near within the limits so that we could turn the right amount of shafts out on the cam grinders.

Q. I think when you bought the six additional machines, I recall the Master asked you the question why did you not, when you got those six additional machines, buy shapers? A. Well, we were on high production right then, you know, and when the shapers were destroyed and the old design could not have been used on the eight cams, they would have to be redesigned and rebuilt. We couldn't have changed. It probably would have taken us six months to get the machine on the job. Whereas, we took the standard machine—what we might call the Walcott standard machine —and we could get those in six to eight weeks. Another thing, the Mellings didn't turn out the work as they should. First, it was never thought of that those camshafts would

have to be straightened after they came off the cam lathe. On the shaper we didn't have to straighten them, and on these cam lathes we had to put in an operation of straightening.

Mr. Spohn: Will you read that answer, please?

(The last answer was thereupon read by the reporter.)

The Master: You didn't have any actual experience with the shaper to know whether or not you had to straighten it?

A. I didn't have any actual experience, but I know we did not straighten them.

* * * * *

(1101) Mr. Farley: As long as cross examination has not yet started, there is one other part of this statement of account to which I direct Mr. Herklotz's attention, which I neglected to question him concerning, and that is the various tabulations of cost contained in the Exhibit 11 as attached to our statement of account, Exhibit "A."

Q. (By Mr. Farley): Of course, you had nothing to do with the **(1102)** preparation of any of the tabulations or computations there (handing document to witness)? A. No.

Q. But, as far as the figures concerning rate of production, and as in sub-paragraph C, rate of production, 5 shafts per hour on the Gordon machine, what would you say as to that? A. Well, I think it is a very good average, 5 per hour.

Q. And, under the column entitled, "Burden II," under paragraph II, we have set up two tool repair men at $.90 an hour, $1.80. What have you to say about the correctness of that? A. That is the same. That is the two tool repair men on each shift.

Q. And, under paragraph D, cost of scrapping, due to defective work on Gordon machine operation, the Exhibit 11 stated, "It appears in using the Gordon machine 60 percent of all the shafts placed in the machine were defectively machined and had to be scrapped." In other words, the usable output was only about 40 percent. What would you

have to say about that? A. I think that is quite conservative. I do really think it is usually, what we could use, was less than 40 percent, because the shafts took off too much on one side, and they could not be salvaged.

Q. Are you familiar with the production per hour on Landis machines, Landis grinders on Fordson tractors? A. I do not remember.

Q. What would you say as to which would be the most costly way of machining the Fordson, F-446 shafts by means of a Landis grinder, or by means of a Gordon machine?

(1103) Mr. Spohn: Objected to. The witness said he doesn't remember production of Landis grinders.

The Master: I sustain the objection. That would require quite an elaborate—

Mr. Farley: (Interposing): Your Honor please, the witness knows something about cost. It may not be he can remember exactly the output per hour on Landis grinders, or Fordson tractors, but let me have a question or two.

Q. (By Mr. Farley): Is it part of your duties there, Mr. Herklotz, to know in a general way of comparative cost of various machining operations? A. Yes, sir; decidedly.

Q. Do you think you know enough about the cost of machining the tractor cam shafts on the Landis grinders to be able to make a comparison between that and the Gordon machine? A. Well, as long as we had the Gordon machine in the plant it required two mechanics to maintain the machine. With the grinders we didn't have any. After they had been running five or six years, I am sure we made the cams cheaper on the Landis grinders than we did on the Gordon machine.

Q. As a man in charge of recommending the purchase of new special purpose machines, would you have recommended the purchase of the Gordon machine as an improvement over the Landis grinders, for the tractor cam shafts? A. I would have recommended the Gordon machine if it had done the work the way it was specified in the proposal.

Q. But, after your experience with the machine would you have recommended it? A. No.

* * * * *

(1110) WILLIAM F. PIOCH was thereupon called as a witness on behalf of the Defendant herein, and having been first duly sworn, testified as follows:

DIRECT EXAMINATION by Mr. Farley.

Q. What is your name? A. William F. Pioch.

Q. Where do you live, Mr. Pioch? A. Detroit.

Q. You are employed by the Ford Motor Company? A. Yes, sir.

Q. How long have you been employed by the Ford Motor Company, Mr. Pioch? A. Since July 19, 1912.

Q. What is your present position at the Ford Company? A. Well, as a rule, we don't have titles out there, but I have charge of all the designing out there for production tools and machines.

Q. Approximately how many machine designers and draftsmen have you in your department? A. Right now we have about 135. We have had as high as 480, I think, is the highest figure.

Q. How long have you had that particular position you now occupy, Mr. Pioch? A. Since July, 1926.

(1111) Q. What were your duties before that, before July, 1926, when you were made head of this department? A. I was an assistant in the department.

Q. And, how long have you been in that department now all told? A. Well, I was made an assistant foreman in 1912.

Q. In the production machine designing department? A. Yes, sir.

Q. So, you have been in that position now for approximately 19 years? A. Yes.

Q. Now, just in general what is the nature of the work performed in that department under your supervision? A. Well, we plan—when we get new parts for the car we plan the operations, specify the machines and design special equipment where it is necessary, where it calls for high production.

Q. Now, in order that we may understand that thoroughly, I assume, or are we to understand, that, for example, the Ford Company makes a change, and let us limit it first to the engine, a change in the engine, such as changing from the Model T to the Model A, the design of that

particular engine, the Model A, that was all carried out in Mr. Sheldrick's department under his supervision? A. Yes, sir.

Q. And, when they have settled upon the design, and they are ready to release the thing for production, Sheldrick's department then issues engineering information, "Release for production," that is correct? A. Yes, sir. That is correct.

(1112) Q. And, all of this engineering information, particularly on parts released for production, a copy is sent to you as well as to a lot of other executives around the plant? A. That is correct.

Q. Now, when they design a new engine of that type, they make, do they not, a detail drawing of each and every part that is to go into that new machine? A. That is correct.

Q. And, a blueprint of each and every one of those parts, there may be a thousand or more of them, is sent to your department? A. Yes, sir.

Q. Is that correct? A. Yes, sir.

Q. And, suppose you get a blueprint of a new model for the engine, now, you have got all the prints, let us say, approximately how many parts were there in the Model A? A. On the whole car?

Q. No, on the engine? A. On the engine. Oh, I would say about 250.

Q. How about the whole car? A. Oh, about 4,000.

Q. And, are the parts, all those parts, those 4,000 parts then considered in your department as to whether or not you will have special machinery made? A. Well, to answer that correctly, I would have to say no. But—

Q. (Interposing): A great number of parts— A. (Interrupting): A great number of parts would have to come under our supervision.

(1113) Q. And a great number of the parts— A. (Interrupting): We buy a lot of them, outside, and then there are parts that do not require any machines or tools, something like that, your upholstering material and that like.

Q. When the change was made from the Model A, let us say, to the V-8, you got all of these blueprints, and then in your department you made the decision as to the new machinery you would need, and what machinery you had

on hand you could use and all that sort of thing? A. That work is all started in our department.

Q. And that is also true with the change from the Model T to the Model A? A. Yes, sir.

Q. And, do you have any present recollection as to approximately how many special machines, machines for special purpose, what would be called special purpose machines, were designed in your department for the change from Model T to the Model A production? A. Model T to Model A? In our department?

Q. Yes. A. Well, on machinery there would have been, say, 100 special machines.

Q. How many machines did you have to consider the revision of because of change from one model to another? A. From one model to another, oh, I would say 500.

Q. Approximately how many machines, special machines, would you say had been designed in that department since 1919, when you first became assistant foreman in there until the present time? A. Since I became assistant foreman? I would say about a thousand **(1114)** special machines.

Q. Yes. That is what I mean. A. Because, if you consider the special fixtures, and the like, there would be a large figure.

Q. Just what is the practice now that you follow in your department when you get all of these detail prints from Sheldrick's engineering? Let us assume you have got all the prints, and what practice do you follow with respect to any particular part that you may reach the conclusion should, because of production necessities, have some sort of a special operation, a special purpose machine, how do you go about preparing to have a machine of that type built? Do you understand the question? A. I don't.

Q. Well, I am assuming that you have got all of your blueprints from Sheldrick; you have a detail print for a new type of job, a new type of engine, we will say, and you look over these blueprints, and you decide that there is some part of the car, of that engine, for which you should have a special purpose machine? A. Yes.

Q. Do you see that? A. Yes.

Q. Well, then, after having made the decision that there should be a special purpose machine, what do you

next do with it? A. Why, usually get two or three of my assistant foremen and we talk the matter over, and decide just to what—how we are going to design this particular machine, and what principles we **(1115)** will use, and then the next thing we do is decide how many men we can put on that job. We start to make layouts.

Q. That is how many of your draftsmen? A. Yes.

Q. And, what do you start from as your starting point; the blueprint which you get from Sheldrick's department? A. From Sheldrick's department, yes, sir.

Q. And that blueprint, of course, gives you the various dimensions, and you know from experience the operation that is to be performed on the part you are producing? A. Yes, sir.

Q. And that is all you need to know to— A. (Interrupting): To get started.

Q. (Continuing): —to get started in the designing of the machine? A. Yes, sir.

Q. And that is part of the regular everyday practice of your department, to design special purpose machines in just exactly that way, is it? A. That is correct.

Q. In connection with the main record on appeal here, or, rather, the printed transcript of the record, we had some testimony from Mr. Martin, and your name came up with it in connection with a certain trip that you made to Jackson after the Ford Company had received notice concerning the infringement, or alleged infringement, of this Walcott machine. Do you remember anything about that occasion? A. Yes, sir.

Q. Will you just state what happened in that respect? Let me first **(1116)** ask this, when was it you personally first heard of this Gordon patent? A. Well, that was the first I heard of it.

Q. About when was that? A. That was in, I would say, July, 1929.

Q. All right, now, just please tell what you did at that time, Mr. Pioch? A. Well, I was notified by our officials about the Walcott Company having a new head that was supposed to have not infringed on the Gordon patent, and they selected me, they asked me to go down to this Walcott Machine Company and look this over and bring back a report, whatever I thought.

So, I went down there and I went there with, I took Mr. Seaberry along, he worked in the purchasing department, and we both went down there and I looked the head over. And after studying it, I came to the conclusion that if the Walcott head, as we were running it in the shop, infringed, why, this one would be also an infringement. I brought that report back to the Ford Motor Company.

Q. Then, what occurred after that? Were you assigned to any other particular job in connection with the machining of the camshafts? A. Well, it took some time after I got back. I don't remember just how long, but I do remember that Mr. Martin spoke to me one day to start thinking about something else, and then finally, after studying the job over, I happened to strike on the idea of milling these cams instead of turning them, and getting them entirely away from a lathe.

(1117) So, we set up some experiments in the tool room and had a lot of trouble, and found out our difficulties and eliminated them. It took us some time and finally we were successful in doing the job 100 percent.

Q. What did you use for doing the job 100 percent? A. Well, we used the regular standard upright tool room milling machines.

Q. That was just in the experimental— A. (Interrupting): That was just one cutter on the spindle.

Q. And, after that, then what happened? A. Then, I got busy and started laying out a milling machine for it.

Q. Did you personally lay out the milling machine, or did you just merely assign that job to one of your assistants? A. No, I gave that to one of my draftsmen.

Q. And, how long did it take him, Mr. Pioch, after you gave him instructions to proceed, to design the Pioch Milling machine, how long did it take him to get out the designs on that? Do you recall? A. The design or all the drawings?

Q. All the drawings, all the details. A. Well, I do remember the time that we started, and I would say about six weeks. It took us about six weeks.

Q. To make all the necessary drawings? A. To make all the necessary drawings. Maybe a little longer.

Q. Then, how long after that was it before you had the machine operating? A. We had a machine in the first

part of May. That would be **(1118)** February, March, April, May; it took us four months.

Q. From the time— A. (Interrupting): From the time we started.

Q. From the time you first started the machine to get the machine completed? A. Yes.

Q. That job was pushed. Was that pushed as a special rush order? A. Oh, yes, that was very good time we made on that.

Q. You went as rapidly as you could, is that the idea? A. Yes, sir. I put every available man we could possibly use to detail off from the layouts.

Q. Now, when you decided to use the milling method of machining the camshafts, did you at that time know anything about the camshaft shapers which had been used by the Ford Company? A. Yes, sir.

Q. When did you first learn anything about the camshaft shapers? A. Why, I saw them when they were first built.

Q. I don't know whether I asked you on your direct examination how long you had worked for the Ford Company? A. Oh, about a year, year and a half, maybe, when we built the first shaper.

Q. You went to the employment of the Ford Company in? A. 1912.

Q. 1912? A. Yes, sir.

Q. And, you saw the shapers when they were first built? A. Yes, sir.

Q. Did you see them operated? **(1119)** A. Yes, sir.

Q. Did you ever operate any yourself? A. No. I was only interested in the machine because it was at that time an outstanding machine. Back in 1913 there was nothing like it.

Q. Had you, prior to going in the Ford Company, had you worked anywheres as an apprentice boy, or anything like that? A. Yes, sir.

Q. You did serve an apprenticeship? A. Yes, sir, part of it.

Q. Where was that? A. Industrial Works in Bay City.

Q. Now, in view of your testimony saying you knew about the shaper, and it was an outstanding machine, why

was it when you wanted to make the new machine, the new non-infringing machine, Pioch machine, that you didn't use the shaper instead of a Gordon milling type of machine? A. Well, I could answer that several ways. I don't believe we would have gone back to the shapers because from the trials we made in the tool room it showed so much better finish by milling than by shaping, that it would save on the grinding operations. That would be one reason. Another reason would be that from what we found out, we knew absolutely that we were going to get more production with the milling machine.

Q. Than you had— A. (Interrupting): Than we had with the shapers.

Q. In that connection how does the milling machine rank as a machine tool in the shops? I mean by that, from the standpoint of production. **(1120)** Is a milling machine known to any first-class mechanic as being a machine of which you can turn out a lot of work or— A. (Interrupting): Oh, yes.

Q. Or the opposite? A. A milling machine can turn out more than a planer, because you lose your return stroke on a planer or shaper, that is evident.

Q. And, on the question of finish, men who have been in the shop know—state what the type of finish is that you get off a milling machine as compared to other machine tools like shapers, planers and lathes? A. The milling is better.

Q. It always gives a much smoother, nicer finish, does it? A. Yes, sir.

The Master: When Mr. Martin first asked you if you could do something to get away from the Walcott design so as to avoid infringement of the Gordon patent at that time you hadn't, it wasn't until after that time you thought of the milling machine?

A. That is right.

The Master: The problem wasn't presented to you?

A. That is right.

The Master: How long would you say it was before you thought of the possibility of designing a certain milling machine?

A. After he talked to me?

The Master: Yes.

A. Oh, I would say maybe a month or six weeks.

The Master: In the meantime had you given consideration **(1121)** to replacing the Walcott machines with shapers?

A. With shapers, I don't believe so, your Honor.

The Master: It never occurred to you you might go back to the shapers?

A. No, sir.

The Master: With regard to that return stroke in the shaper, that is a pretty rapid stroke, isn't it, as compared with the forward stroke?

A. Yes. It is much faster than the cutting stroke.

Mr. Farley: Now, I might state here that we have taken out from the files—but, I don't happen to have them here at the instant—work orders that had to do with the designing and the building of the Pioch machine, and those work orders substantiate very clearly the elapsed time.

* * * * *

(1131) Q. (By Mr. Farley): How was it, Mr. Pioch, that we have the lapse of from the 3rd of—or, 20th of March, 1930, until the 26th of August, 1930, before the six additional machines were ordered? A. Why was that?

(1132) Q. Yes. A. Oh, that is regular practice. When we put a machine on the job, it is to make a run, oh, say, sometimes two or three months, four months.

The Master: One machine wouldn't turn out your entire production by any means?

A. No, sir.

The Master: So you, at least, weren't certain enough of the success of your machine so as to make a battery of them for production—

A. (Interrupting): Not a battery of six, no, sir; a machine costs too much money.

Q. (By Mr. Farley): And, you ran the machines as these figures show? A. In this case it happened to be five months. You see, an order for six would be almost $100,000.

* * * * *

(1138) Q. Are you familiar enough, Mr. Pioch, with the shaper to understand the operation of it? A. Yes, sir.

Q. When you discontinued Model A production, what type of machines were you using for the machining of the cam shafts? A. Walcotts.

Q. When you discontinued Model A? A. When we discontinued Model A?

Q. Yes. A. We were using the milling machines.

Q. The Pioch machines? A. Yes, sir.

Q. After you discontinued Model A production, you went to the V-8 production, that is correct? **(1139)** A. That is right.

Q. Could you have used the Pioch machines as you used them on the Model A machine, the cam shafts of the V-8 motors? A. No, we couldn't.

Q. What did you use on the V-8's? A. The milling machines.

Q. The Pioch machines? A. Yes, sir.

Q. And, what did you do insofar as the—if you couldn't use the Pioch machines that you used on the A with the V-8, where did you get the Pioch machines that you used on the V-8's? A. We had to build new ones. We had to re-design the machine to fit around the Model V-8 shaft.

Q. Is there anything unusual in that particular procedure? A. No. That is regular procedure.

Q. Of your department? A. Yes, sir.

Q. If you had wanted to use the shaper type of machine for Model A production, you decided upon using the shaper type instead of Pioch machines, could you have used a machine of that type on the Model A shafts? A. The shaper type?

Q. Yes. A. We could have, but we would have to re-design them to fit the A shaft the same as we would the milling machines.

Q. Have you recently, when requested by me to examine into that particular proposition, to decide what, if anything, you had to do in the way of re-designing the shapers? **(1140)** A. I have. You asked me to make an investigation

to see how much work had to be done to use the shapers for the Model A shaft.

Q. And, what did you do in connection with that? A. Well, I immediately turned the job over to one of my men that has charge of the machine designing department, and he immediately started a draftsman on it after we discussed the thing. We studied the design of the shapers and decided which way would be the simplest and best way to go about that.

Q. What was the name of that particular man? A. Mr. Boesen.

Q. In doing that, did you make any departure from your regular practice or procedure in your department? A. Not at all.

Q. And as a result of your assigning Mr. Boesen, and him assigning one of his assistants to the job, did you make any particular drawings? A. Yes, we did.

Mr. Farley: Will you mark these blueprints, please?

(Two blueprints were thereupon marked Defendant's Exhibits 254 and 255, respectively, by the reporter.)

Mr. Farley: I have had the reporter mark two blueprints of the Ford Company as Exhibits 254 and 255. Would you examine those—

Mr. Spohn (Interposing): Just a moment. If your Honor please, at this time we wish to object to the offer, or rather, any testimony at all concerning the change in the machine for a standard of comparison that was never used. There is no testimony on it that it was used, and in connection with (1141) all drawings in connection with that machine.

The Master: Well, we have already considered that at great length, and I will overrule the objection.

Q. (By Mr. Farley): Now, will you proceed to state what those blueprints are, Mr. Pioch (handing documents to witness)? A. Well, these prints represent the design of the machine known as the Ford cam shaft shaper, drawing number 18-Z-3, and they were the machines that produced the production on the Model T shafts.

Q. When were these particular drawings from which these blueprints were made, when were they made? A. They are dated 11/17/13.

Q. And, are they blueprints that you found in the records of your department? A. Yes, sir.

Q. Very well. Now, can you explain to the Court what the blueprints show as far as the general mechanism of that machine as shown by these blueprints in their original form is concerned?

Mr. Spohn: In order to save time, your Honor, I assume this is all taken under my objection?

The Master: Yes. I don't think you need to object to any particular question.

A. Well, this sheet here, which is marked number 254, shows a view, that is a front view of the machine, showing the position of all the tools, which is eight.

Q. Of the whole Model T? A. Of the Model T cam shaft. The cam shaft—

Q. (Interposing): Cam shaft shaper? **(1142)** A. The cam shaft also shows in here very faintly, you can see these cams here, these light lines—there is a Model T shaft shown right in position there, and the way the machine worked, these tools altogether moved back and forth.

Q. The tools moved back and forth? A. And, as they moved back and forth, the shaft itself rotated on its own center, and the tools followed the master cam on top to generate the desired shape of the Model T cam.

Q. Suppose you mark the tools with a "T" there. A. All of them?

Q. Just "T" to one of the tools will be sufficient.

(The exhibit was so marked by the witness.)

Q. And, mark the master shaft, "M" at the top.

(The exhibit was so marked by the witness.)

Q. Now, you stated that the tools moved back and forth. Did the tools move back and forth, or did the cam shaft move back and forth under the tools? A. The tools were stationary. They moved up and down. As the whole carriage on the bottom carrying the shaft, moved in a lateral, sideways, and as the tools returned, your whole slide moved up a little bit. That is so it wouldn't be dragging back on the work piece. Now, that—

Q. (Interposing): Now, I notice some—will you refer now to the other sheet, and I notice some lines in crayon on both of the sheets. Perhaps you better take the

first Exhibit 254 and explain those lines in crayon on the two sheets. A. Well, what we have shown here in yellow represents an attachment that we could have added on to the shapers for the Model A shaft.

(1143) Q. That is an attachment to the shapers as originally constructed? A. Yes, sir.

Q. Without changing the entire machine, is that the idea? A. Yes, sir.

Q. And, can you explain to the Court just what the nature of that attachment is, and, perhaps, in that respect you might refer to the wooden models? A. That is right. That would be better.

Mr. Spohn: Before this testimony is taken, my objection also includes an objection to this line of testimony on this modified shaper, as not disclosed in the account as being standard.

The Master: Well, I will overrule that objection, too.

(The witness stepped down from the witness chair over to the wooden models.)

A. Now, this model here represents, in principle, the action of the Model T shaper as it was built.

Q. (By Mr. Farley): Just a minute, Mr. Pioch, this model has already been referred to, and it is marked Exhibit 237. And, we will mark the other model Exhibit 256.

(The wooden model above referred to was thereupon marked Defendant's Exhibit 256 by the reporter.)

Q. On Model 237 there is an inscription printed on the front, "Model T cam shaper"? A. That is right.

Q. And, on model, Exhibit 256, it is marked? A. "Model A cam shaper."

Q. Very well. Now, will you proceed? **(1144)** A. This Model T cam shaper is made off from the drawings 18-Z-3, and represents the principle that that machine worked on. And, this shows the way the thing worked. It carried the work piece. Of course, you have no mechanism on that. This has a drive shaft coming off here, and going up to the head connected to the master shaft, so everything should be in time, and these tools moved up and down. As this thing went back and forth, this shaft turned around. Now, then, if we go to the other model, representing the same

shaper for the Model A shaft, we would have had to build this attachment out in front of it. And, that shows it is still cutting; we have taken one tool out and one tool out over here (indicating).

Q. You took out—if you will say you took out the tools for the cams, calling the cams by number? A. Calling this one number one, numbered from the front of the cam shaft.

Q. Is that the way you usually number the cams or do you start from this end? A. I don't remember.

The Master: The other witnesses started from the left.

A. I took the other from the rear on that testimony.

Mr. Farley: All right, number one cam.

A. Number one from the front, and number five.

Q. (By Mr. Farley): And, from the front you are referring to the large flanged end on the cam shaft? A. Yes, sir.

Q. Very well. A. And, we have taken the number one cam tool and number five cam **(1145)** tool, and placed it on this attachment that we could have built on the front of the machine. Now, this here clearly shows that with the same mechanism, they are both identical, taken off from the prints, that we could have added this attachment on there and cut off all the cams. The principle of that is this shaft that comes out in front of the machine housing, all we had to do was put this bell crank on here, and this bell crank.

Q. Just a minute, let us mark these shafts with the letter "S." When you say this shaft which comes out at the front, which I have just marked with the letter "S" on Exhibit 237, what is the function of that particular shaft? A. That is the shaft that has the lever keyed to it that moves the carriage that holds the work piece.

Q. Now, do you have a similar shaft "S" on this other model? A. Yes, sir.

Q. Exhibit 256? A. Yes. A shaft extended.

Q. Yes. A. And, a similar lever keyed to this shaft with a radius two times of the lever that moves the carriage that holds the work piece. The reason for that is so that the tool, that is the carriage that holds the tool, moves twice as fast with the same cutting speed as the other tools.

Q. And, the two tools which are on the attachment, they cut the cams, just the number one cam— A. And number five.

Q. (Continuing): —and number five, by attacking the cam from the opposite direction? **(1146)** A. Opposite side.

Q. And the opposite side from which the vertical tools attack the cam as in the Model T job? A. That is correct.

The Master: But, you have a double movement of the horizontal tools, an additional movement over and above that that you have on the vertical tools?

A. That is right.

The Master: Because there is an in and out movement, and also a sideways movement, as they cut?

A. Yes, they have that in here, too. There is a master cam attachment.

The Master: In other words, two movements of the tool with the extra tools, you have set up here horizontally, and you only have one movement of the vertical tools?

A. Yes, that is right.

Q. (By Mr. Farley): The extra movement of the tools to which the Master refers were the two tools— A. That is the lateral movement and the in and out.

Q. That is, the extra movement is to perform the cutting stroke? A. That is right. The one movement performs the generation of the cam, and the other movement performs the cutting of the cam.

Q. Now, let me ask you, Mr. Pioch, with that operation of the attachment, is that the type of a shaper action or shaper machine? A. That is right.

Q. In the conventional shapers is the cut performed by the action of the tool traversing the work, or by the work traversing under **(1147)** the tool? That is the standard shaper. A. A standard shaper the tool moves and the work is stationary. And, in this shaper it does both.

Q. Now, insofar as the mechanism for operating the attachment carriage, which is located in front of the machine is concerned, can you state whether or not that fol-

lows ordinary shaper practice, or is it anything different? A. It is not different. It is the same as the shaper practice.

Q. The mechanism for imparting that movement is the same? A. That is right; the same.

Mr. Farley: I wonder now if you would let us go back to the blueprints and point out to the Court the driving mechanism for reciprocating the carriage in the old shaper.

(The witness thereupon resumed the witness chair.)

Q. Let me first ask, you are familiar with the type of driving mechanism used on what we would call the standard production shapers? A. Yes, sir.

Q. And, would you state whether or not what difference there is, or if there is any difference between the driving mechanism and the ordinary shaper drives? A. There is no difference.

Q. Now, just explain to the Court the peculiarities and functions of the standard shaper drive as it is shown in this particular drawing, Exhibit 254 (indicating)? A. Well, here is—I don't know just how to start this—here is driving member rotating above this point.

Q. Let us get some reference characters as we go along. Starting **(1148)** with 1, I think, would be simpler. Just use Roman numerals. Put the number "I" on that line you put to the shaft.

(The exhibit was so marked by the witness.)

Q. And, that is the— A. That is the driver.

Q. That is the main power of the shaft? A. Yes, sir.

Q. Starting with that? A. And, this is number 2, is the driven arm. Then—I can't decipher this thing here—there is a bell crank in here, which we would have to call number "III" from here to here (indicating), and that bell crank is attached to the slide. We will say this is the bell crank number three (so marking the exhibit).

Q. It is attached to the slide "4" let us say? A. The slide 4 (so marking the exhibit).

Q. "4," the slide, is the same as the carriage? A. The work carrier.

Q. Yes. A. Now, then, as this rotates, it imparts a motion.

Q. As what rotates? A. As "I" rotates, it imparts rotation on number 2, and that in turn imparts rotation on bell crank, number three, and that moves number four back and forth.

Q. That is the conventional shaper drive, is it not? A. Yes, sir.

Q. Now, what additions, if any, did you make as shown on the drawings here for that drive? **(1149)** A. Well, as the wooden model shows, we extended shaft "S" as shown on the model.

Q. Which you have numbered "3"? A. And fastened the bell crank on the extension of this shaft. This bell crank, having a leverage two times of the one on the inside, that imparts motion to the work slide. Now, this new lever imparts motion on the added attachment in front of the machine that carried tools for cutting cams numbered one and five.

Q. Now, have you had Mr. Boesen, or anyone in your department, prepare any additional drawings which show just merely the attachment in a little more simplified form? A. He did.

Mr. Farley: I will ask that the new drawings, these drawings, be marked Exhibits 257 and 258.

(The two drawings above referred to were thereupon marked Defendant's Exhibits 257 and 258, respectively, by the reporter.)

Mr. Farley: And, they are 18-Z-3, and one sheet is entitled, "Assembly," and another sheet is entitled "Sub-assembly," each machine having the main title, "Special machine for shaping eight cams on cam shaft at one time."

Q. (By Mr. Farley): Now, will you refer to the sub-assembly, first assembly drawing, Exhibit 257, and point out the parts shown on there which show the same representation as you have in the wooden model, putting a suitable reference number on it? A. Well, we mark this shaft number one again—no, that is on the bell crank shaft.

Q. That was letter "S"? **(1150)** A. Yes, letter "S," "letter 'S' of wooden model." That shows the added

bell crank keyed on to this shaft "S." This bell crank imparts the motion on the added slide that carries tool number one and number five.

Q. And, the carriage with the added slide or tool attachment, will you give that a reference character? A. The tools numbered one and five are held in a tool slide, tool holder and slide, that are held against the added master cams by spring pressure. This principle is the same as the tools in the vertical head.

Q. Now, how about the attachment, Mr. Pioch, for operating the master cams to control the tools 1 and 5, did you make any change in those? A. No, sir. All we did was to take, shown on Exhibit 258, the upper center—will I label that?

Q. Yes. A. The upper center marked "A" (so marking the exhibit) is the original driver for the master cams on the original machine. And, in order to furnish a drive for the added attachment, we add a gear marked idler gear and driven gear, which connects to the new gear that is keyed to the added cam shaft.

Mr. Farley: I have another drawing, again marked 18-Z-3, and marked "Assembly," I will ask that it be marked Exhibit 259.

(The drawing above referred to was thereupon marked Defendant's Exhibit 259 by the reporter.)

Q. And, I will ask you what that drawing represents? That is what we call a front elevation of the machine (handing document to **(1151)** witness)? A. That is what we call a front elevation of the machine; the top part of it.

Q. And, it shows the space where the two tools have been removed? A. Yes, sir.

Q. For cams one and five? A. Number one and five.

Q. And, on the upper part where the master cam "M" is, the master cam— A. (Interrupting): Has been removed.

Q. The two master cams have been removed? A. Yes.

Q. Suppose you mark that master cam "M"; I think that is what you marked it in the other drawing.

(The exhibit was so marked by the witness.)

Q. Now, in connection with these drawings and these wooden models, Mr. Pioch, these were prepared, as I un-

derstand it, on the basis of making what might be termed the cam change in one of the existing model T cam shapers had one been available as a physical machine at the time? A. Yes, sir.

Q. Now, these drawings which were prepared by Mr. Boesen, would you say whether or not there was any particular departure from the principles of practice of your department in that respect? A. No, sir. That is our regular procedure. There is nothing unusual about this.

Q. Could you state as to whether or not, or would you have any opinion as to whether or not a machine constructed in that **(1152)** manner would function and operate? A. Pardon?

Q. Have you any opinion as to whether or not, had you actually built this machine on an old shaper, if you had one available— A. (Interrupting): Yes.

Q. (Continuing): —could you state whether or not, in your opinion, it would operate? A. Oh, yes, this would operate; of course.

The Master: May I ask this in that connection?

A. Yes, sir.

The Master: Would you be so certain this machine would operate as to feel safe if, for example, you hadn't developed the milling machine at the time you did, to go ahead and build enough machines for the entire production without first building a testing machine?

A. Well, your Honor, I believe we had at the time we were notified of infringement at the time, if we had any of these shapers around we would have used them immediately.

The Master: Suppose you had no shapers around, but hadn't been able to develop the milling machine, or hadn't thought of the principle of it, and you decided, however, to replace the Walcott machines with shapers as modified in this style?

A. Yes.

The Master: Would you have felt certain enough that your modified shaper would be workable and successful so that you could have immediately or-

dered eight or ten shapers, or the number necessary to do the entire production on the cam shafts, or would you have done as you did with the milling machine and **(1153)** built simply one shaper first to test it out, and then ordered the rest?

A. I believe in this case, being that the shapers ran for such a length of time, that we would have ordered more than one. I am sure of that.

Q. (By Mr. Farley): May I ask, Mr. Pioch, if you had been confronted with the problem at the time the Model A shaft and the Model A production got into the picture, let us assume you had on hand—or with the conditions just as they were, that is, the shapers had been already salvaged, they were no longer available as a physical proposition, and it was decided before Model A production started, that you were going to use the shapers again, just how would you have gone about that?

Mr. Spohn: Just a moment, what was that question, again?

(The last question was thereupon read by the reporter.)

A. Why, we would have designed the shapers just as they were, showing the added attachment as we have seen in this wooden model.

Q. (By Mr. Farley): Did you consider at all, in connection with this particular idea of the availability of the shaper method, any other type of construction than as shown in these particular drawings, which we have just been discussing? A. Well, if—let me put it this way—if we hadn't had the shaper design as we see it today, we probably would have designed this shaper in principle as is, but with one tool on number one cam on the front side, number two cam on the back side, and so on, alternately, down to the end of the shaft. That would be better than the condition we have shown in our model, because the pressure of this tool would neutralize the pressure of the **(1154)** tool on the next cam on the opposite side, and so on down. You could have done that.

The Master: You could not have done that without bearing interference in the Model A shaft, could you?

A. Yes, we could, your Honor, because we would have had one slide as shown here, and then we would have had a slide on this side. This slide on this side in the front would cut towards the left, and the slide in the rear would cut towards the right, and there would be no interference with the bearings.

The Master: The work piece would remain stationary?

A. Yes, sir. I say, had we not seen this design. I was only citing there the way we attack a job; that is, if we didn't know anything about this, that is the way we would lay this out.

The Master: I might ask this question. When were you first asked to give attention to the problem of re-designing the shaper to fit the Model A cam shaft, or produce the Model A cam shaft?

A. On the shaper?

The Master: Yes, sir.

A. That is the date of this drawing (examining blueprint), we started that—I hope there is a date on here somewhere, there must be a date on there, no, there isn't. That is funny.

The Master: Do you remember the approximate time?

A. It was last summer, I think. Maybe 9 months ago, 6 months ago. I wouldn't say exactly.

Mr. Spohn: Some time in 1938?

A. Yes, sir.

The Master: Did you ever discuss the problem in a general **(1155)** way before with Mr. Farley?

A. Not before the date that—the time he asked me to consider that.

The Master: All right.

Q. (By Mr. Farley): Do you recall whether or not you talked with Mr. Woehrle about that matter before you discussed it with me? A. I don't remember.

Mr. Farley: I will show by Mr. Woehrle, if the Court please, this was all done prior to our filing—in preparation of our accounts.

Q. (By Mr. Farley): Now, I wonder, Mr. Pioch, you know, or stated part of your duties was to know, whether or not any new production machinery, particularly special purpose machinery purchased by the Ford Company such as these Walcott lathes, result in any savings or not, to the company? A. Yes. We make investigations.

Q. Do you know whether or not the Ford Company effected any savings by the use of the Walcott machines? A. By comparison?

Q. Yes, by comparison, let us say, with the shapers, over the cost of machining the shafts over the shapers? A. Well, I doubt if there was any saving made with the Walcott machines, comparing it with the shapers. I know this much, that we had about, oh, possibly six tool makers in the department where we ran the lathes, and I don't ever remember seeing any tool makers around in the shaper department, when they were running. That is, they might have produced a few more pieces an hour than the shapers did, but the cost of maintaining the **(1156)** Walcotts would surely, maybe, more than eat up the profits made from the extra production that the lathes produced.

Q. Do you happen to know anything at all whether or not there was any differences in the manner in which the shafts were prepared for operation on the shapers, and for operation by the Walcott machines? A. Well, we added an operation to straighten the shafts for turning on the Walcotts so that the finish, the stock had to be removed to be more uniform than when we used the—cut on the shaper, because the shaper tool could stand for more unevenness of stock than on the lathe.

The Master: Why is that?

A. Well, in turning on the lathe, it was bad enough even if you had stock around the cam for that tool to slip around that end; where, on the cam shaper, it had to shape an irregular-shaped piece. In travelling across it laterally if you hit a hump it wouldn't damage the tool as near as much as you would a tool trying to swing around that nose, because the cam shaft shaper was no more than finishing a straight surface. That is the work it was doing. You could say the principle of the cutting of that surface is no different than cutting a straight surface.

The Master: Well, would that difficulty you speak of be remedied by straightening the shaft? Wouldn't that be a question of getting as correct a forging as you could possibly get?

A. Yes.

The Master: You might have a perfectly straight shaft and still have humps?

(1157) A. Yes, but all forgings, after they cool off, after the forgings cool off, they distort somewhat. That would give a tendency for this cam to be off center, say, 1/16th of an inch more on one side than on the other. So, we had to straighten those shafts to eliminate—

Q. (By Mr. Farley, interposing): You always had that operation of straightening after?— A. After machining. We always have a straightening operation after machining. But, the straightening operation before the machining was added for the Walcotts.

Q. You always did have the straightening operation, however, in the very beginning after the forgings came from the Ford shop? A. Yes, sir.

The Master: Some of the other witnesses who testified here stated the reason the straightening operation was necessary on the Walcott machine, and not on the shaper, was because the pressure of all the cutters in the shaper was immediately vertical and downward, and the camshaft underneath the shaper tools was resting on five supports?

A. Yes.

The Master: So that as the tools travelled across the camshaft, the pressure of the tools straightened the shaft while the operation was being performed, although it might swing back after 1/16th of an inch.

A. Yes.

The Master: Whereas, in the Walcott machine the shaft was swinging more freely in space?

A. Yes.

The Master: There was simply the center rest to steady it, **(1158)** which the witnesses testified was not

as steady as a support with the rigid supports underneath?

A. That would be a reason.

The Master: You have a slightly different reason?

A. I am giving you my opinion. That is, I think, really the main reason why they straightened them.

The Master: The reason you gave or the reason the others gave?

A. The reason I gave. They had to straighten those shafts to make them straight.

Q. (By Mr. Farley): How about the reasons given by the other witnesses? Would that also be a fact? A. I didn't hear that.

Q. The situation Mr. Quaife just outlined? A. That would also be another reason for straightening the shaft, yes. I hadn't given that a thought.

The Master: As far as that reason is concerned, the re-designed shaper you designed for the Model A, it would be open to the same objection as the Walcott lathe was, and if anything, in a more aggravated form because there you would have been having a pressure in two different directions, and it wouldn't have been all on five supports?

A. That is right.

The Master: So, can you state, would it be your opinion with the re-designed Model A shaper, it might become necessary to add the straightening operation which you didn't need with the Model T?

A. I think I explained to you, if we completely re-designed the **(1159)** machine, we would have put a bank of four tools on one side, cutting in one direction, and a bank of four tools on the other side. Had we had shapers, we would have added that to the shapers. That wouldn't have taken us ten days time to get those shapers into operation.

The Master: Let us limit our inquiry to the shaper which you re-designed, which did not have the four tools on the opposite sides, but the one which is represented by the wooden model and the drawings you

produced here. With that particular re-designed shaper shaping the Model A camshaft, could you state whether it would be your opinion whether a straightening operation might be necessary or advisable immediately before inserting the shaft in the shaper?

A. Well, I wouldn't say it would be absolutely necessary, but there is a possibility. But, as far as taking care of the tool life, the straightening operation would be no more necessary with that attachment.

Q. (By Mr. Farley): That is, than with the original? A. Than with the original shaper.

Q. You are stating, when you are discussing the operation of the Model T shaper, and particularly with reference to this straightening operation— A. Yes.

Q. (Continuing): —that your tool was performing what was substantially a cut on a plane in a straight line? A. That is right.

Q. Now, would the placing of the extra attachment in the front of it in any way change that principle of operation? A. It would not.

(1160) The Master: If there were a tendency of the shaft to spring under the pressure of the tool, however, the tools which you have on your re-designed shaper from the front would tend to push the shaft backward toward the rear of the machine?

A. That is right.

The Master: And, might not take off as much stock as would be necessary.

A. You see, these extra bearings are made like this (indicating). Now, your shaft lays in here. Any pressure of that side tool there in this direction, this bearing would back it up just the same. I see the point you are getting at now. You mean there would be a spring in the shaft?

The Master: That was the main reason that the other witnesses have given for the straightening operation. I realize you have another one. But, I was looking at it from another angle.

A. This bearing here would overcome any tendency of this tool, the pressure of this tool, in this direction.

Q. (By Mr. Farley): Of the two front tools? A. Yes, sir. This bearing here would support that. It would still support that, although on the top it is open where the other tools were. We have many cases like this in operation today in the plant.

The Master: Wouldn't it have been a simple matter with the Walcott machines to design additional steady rests to give additional support to the tools so that there would be no more springing in the shaft than with your rests in the shaper?

A. Well, my opinion is that it wasn't the trouble with the shaft **(1161)** springing; it was more trouble with the tool springing in the Walcott machine.

The Master: From the standpoint of the springing of the shaft, you don't think there is very much difference between the shaper and the Walcott?

A. No, sir.

Q. (By Mr. Farley): On the question of the additional steady rests in the Walcott machine, did you consider, before answering that, the fact that in the Walcott machines, the tools attack the work from the back, do you remember, in the Walcott machine? A. Yes.

Q. All of your eight tools are behind the shaft toward the rear of the machine? A. Yes.

Q. And, the operator puts the shaft in from the front? A. Yes.

Q. How would that affect the problem of using additional steady rests? A. Let's see, does that represent the tool there?

Q. No. Here is your tool over here? A. Oh, this is the master.

Q. This is the master. A. Oh, that is right.

Q. Now, you have your camshaft running across the front of the machine? A. That is right.

Q. And, the front of the machine is to my left here? A. Yes.

(1162) Q. And, you have on the Walcott machine one steady rest which engages the center bearing? A. Yes, sir.

Q. Considering the fact that the Walcott tools came in from the back, what would you say as to the feasibility of adding additional bearings such as his Honor has sug-

gested along the shaft such as of the type you were talking about, additional bearings that would resist the tool pressure? A. I believe that could have been added in there. It wasn't though.

The Master: I might ask this—

Q. (By Mr. Farley): How would that affect your loading conditions if you tried to put several bearings along the front of the machine that are going to resist the action of the tools coming from the back? A. Well, it would have slowed the loading time down.

Q. Suppose you put in an arc shaped, a steady rest on that of an arc shape like bearings, steady rest bearings like you used on the shaper? A. Yes.

Q. As that rests there, there are some circular recesses exactly opposite the thrust of the tool? A. Yes.

Q. If you were going to put a bearing of that type on the Walcott machine, you had to have your rest in that position with the opening directly toward the back, would you not? A. Yes.

Q. And, you are going to load the machine and have eight tools in **(1163)** back of the machine that are already positioned? A. Yes.

Q. And then you are going to have to put the shaft in? A. The steady rest would have to be towards the front.

Q. How are you going to get your steady rest or your shaft like this (indicating), around the steady rest, bring it forward into the steady rest and clear the tools? A. I don't know. That could be—it might be done. I don't know. We will have to figure that out.

Q. I would like to see you do it. A. It is just another problem. We can work it out for you. I always work on the assumption that there is nothing impossible as long as—

Mr. Michael (Interposing): I suggest you just add a steady rest like the Walcott lathe had on it.

The Witness: We are talking about adding more steady rests.

Mr. Michael: Yes.

The Master: What actual study did you make of this straightening problem, or what attention did you give it before? Was it brought before you at the time

they were considering adding the straightening operation on the Walcott machines and using the Walcott machines?

A. No, I couldn't say, because I really believe the straightening operation was added to eliminate the many troubles they had with those machines, to help the machines produce.

The Master: When did this problem which necessitated the straightening operation in the Walcott machine come to your **(1164)** attention before being brought up at the present hearing?

A. I would say after it got started. The shop men started that. We had nothing to do with that.

The Master: What critical attention or study have you given to the cause which required a straightening operation on the Walcott machine when it wasn't necessary on the shaper? Are your judgments and ideas on that more or less offhand ideas?

A. Taken from the shop men. Our department had nothing to do with the straightening operation, although I do know they added the straightening operation.

The Master: Are you familiar with the difficulties they had with the Model T cam shaper in the early period of its operation due to filings and chips from the metal of stock that was removed from the cams getting into the slides and preventing them from operating smoothly?

A. I wouldn't say.

The Master: Are you familiar with the fact a guard was put onto the machine?

A. No.

Mr. Michael: You said "shapers," I think, your Honor.

The Master: Wasn't that true of the shapers? I think that was the testimony of one of the witnesses.

Mr. Michael: I didn't recall that.

Mr. Farley: I think that is right.

The Master: He said they had no trouble with the shaper except in the beginning—

The Witness: (Interrupting) That was done in the shop.

The Master: I was wondering wouldn't it be more difficult **(1165)** to put such a guard on the re-modelled shaper for the Model A cam shaft which you have embodied in the wooden exhibit there.

The Witness: That would have been before my time.

Q. (By Mr. Farley): Mr. Pioch, looking at your wooden model there suppose you come over here for a minute.

(The witness stepped down from the witness chair over to the model above referred to.)

Q. (By Mr. Farley): The former witness, I believe John Schmidt, explained that they put a guard on here to prevent chips from getting down the slide? A. In the ways.

Q. In the ways. As I understand his description, and obviously knowing what the problems are, that would have been simply a piece of tin placed over the slide? A. That is right.

Q. And, extends out over here? A. That is right.

Q. So that on the full travel, the opening would remain closed? A. Like as not, that guard probably was around the top of this and came off the side here so that the chips would all fall down. I don't know.

Q. Insofar as that is concerned, would it have been any more difficult putting a guard of that type on the so-called Model A? A. No.

Q. Than there would on the Model T.

The Master: You couldn't extend the guard in the front?

A. No, not in the front, but you could extend it around here all **(1166)** the way to the back. Yes, you could; all the way around the front (indicating). You could have a telescoping guard, a guard on top of this, and one on top of that, and one would be sliding over the other like this. There is nothing impossible.

* * * * *

(1174) Mr. Farley: I don't think I have offered these exhibits. I will offer Exhibits 252 to 261 in evidence; 252 and 253 being the work orders, and I think the others being the drawings—254 and 255 being the drawings of the cam shaft shaper originally made in 1913 with the crayon additions more recently made; Exhibit 256 being the wooden model of the cam shaft shaper; Exhibits 257, 258 and 259 being the more recently prepared drawings of the modified cam shaft shaper attachment; and, 260 and 261, the two drawings showing the quick acting tail stock.

* * * * *

(1176) The Master: Where are the supports subjacent to the cam shaft shown on Exhibit 254?

A. Will we mark them? Right here (indicating). There and there.

The Master: How many does that show?

A. It shows three.

The Master: Is that three in addition to the head stock and tail stock supports?

(1177) A. Yes, sir.

Mr. Farley: Suppose you mark them with the reference character 10.

A. "10"? We can mark it "Support." Here it is identified as detail 152 (indicating).

Mr. Farley: I see.

A. And detail 153. And, this one is not marked (indicating), it is probably marked on another sheet.

Mr. Farley: Just mark them "10," that will be the simplest.

(The witness thereupon marked the exhibit.)

Mr. Farley: Those represent three steady rests on the machine, is that the idea?

The Witness: That is right.

The Master: You testified that the wooden model, the Model T cam shaper, was constructed in accordance with these drawings?

A. Yes, sir.

The Master: Without giving all the detail parts that you have in these drawings?

A. Yes, sir.

The Master: That illustrates the principle of operation?

A. Yes.

* * * * *

(1179) Mr. Farley: While they are looking for that, I might ask the witness one further question, I think I am about through.

Q. (By Mr. Farley): Mr. Pioch, the plaintiffs here have filed a certain statement of account in which the major figures, and by far the largest proportional part of their claim against the Ford Company, is based on the assumption that if the Ford Company had had those machines available for use, and had not used the Walcott machines, it would have been compelled to use Landis grinders for the rough machining of the cams of nearly five million Model A cam shafts. What have you got to say about that?

Mr. Spohn: Just a moment, will you read that question back?

(Last question was thereupon read by the reporter.)

A. At that time—

Q. Do you understand the question? A. Yes, sir, I understand the question all right. At that time my opinion is that it would have been almost impossible to use the grinders because the grinders are too slow. We would never have thought of going back to grinders; never.

Q. Do you know whether the Ford Company ever used grinders for machining the cam shafts of any of the large production jobs, Model T— A. (Interrupting): From the rough?

Q. Yes. A. No, sir.

* * * * *

(1186) Q. Now, the question was asked, as I recall it, by the Master, of one of the witnesses who preceded you on the stand as to why, or rather, concerning the purchase

of the Walcott machines in 1929. Were you familiar with the fact that the Ford Company in the early part of 1929 purchased additional Walcott machines? A. Yes.

Q. And did you know for what purpose they were purchased? A. Yes. The one reason was they had to have more machines on account of their production, and the other reason was they had to have additional machines to improve the finish as they were **(1187)** adding on a third cut.

Q. That was the intention, to use the additional Walcott machines to take a third cut? A. Yes, sir.

Q. And that would have been for the purpose to reduce the work on the, or the time on the finished grinding, wouldn't it? A. That is right.

Q. Now, why did you not, when you purchased those additional machines in 1929, employ a shaper for that operation? A. Well, as I remember the time in 1929, we were so crowded for cars, our production was so high, it would have been impossible to resort to another type of machine. We did not have any shapers and it would have taken us at least six or seven months to build them, and it would have been like trying to change horses in the middle of a stream.

Q. At that time do you know whether or not in 1929, any of the original patterns for the manufacture of shapers were available? A. They were not.

Q. Do you know whether all of the detailed drawings of the original shapers were available? A. They were not. All we had left were the assembly prints.

Q. Now, if you had decided, however, to use the shaper at that time how would you in your department have gone about doing it? Would you have taken your detail prints, as you already described that you received from Mr. Sheldrick's department, and proceeded? A. That is the regular procedure.

Q. And you would have designed the cam shapers? **(1188)** A. The cam shapers from the part itself. That is regular procedure.

Q. Do you know whether or not the Walcott machines which you purchased in 1929 were machines that were available on the market? A. They were.

Q. Do you have any knowledge, Mr. Pioch, concerning the practice that is followed by the company in connection

with the purchase of machines on which, and I am speaking of production machines— A. Yes.

Q. —on which they know there are patents covering the particular type of machine. What would you do in that particular instance? Suppose you wanted to buy a machine for the production, let us say, of a special purpose machine, and you knew that someone had a patent on that particular type of machinery. Do you know what would be done under those circumstances, or would that come under your supervision? A. I am not in the purchasing department, Mr. Farley, but I know when a machine is purchased that is covered with a patent, the company buys that machine with the understanding that the manufacturer of that machine will back up the rights of that patent; that the Ford Motor Company will not be responsible for that. I know that much about it.

* * * * *

(1189) Q. (By Mr. Farley): Do you know whether you make any effort to purchase patented articles, whether for production machinery or for the cars directly from the owner of the patent or not? A. Yes, we do. I know that.

Q. You always make it a practice to purchase from the owner of the patent? A. Yes, sir.

Q. As long as his device is satisfactory? A. That is correct.

Q. Suppose the device of the owner of the patent would not be satisfactory, what would you then do? A. Why, we would try to design around the patent, get away from it.

Q. Do you know of any recent instances where any purchase of material and special purpose machinery has been held up by the company on account of the question of patents being raised? A. Crankshaft machines, crankshaft turning machines.

Cross Examination by Mr. Michael.

Q. Do you know of any instance prior to that, Mr. Pioch? A. Walcott lathe.

Q. Any other? A. I do not.

Q. With the exception of your training at the Industrial Works in Bay City, did you get all your training at the Ford Company? **(1190)** A. No, sir.

Q. Where else did you get your training? A. I worked for Ammerman & McColl in the Penobscot Building. McColl, he was from the University of Michigan.

Q. And what was the nature— A. And then—

Q. Go ahead. A. Then I worked for Bantam Motor Truck Company, and then after that I worked for the Trio Manufacturing Company. From there I went to Ford's.

Q. Now, what was the nature of your experience prior to going to Ford's? A. Prior to going to Ford's? Well, I worked two years as an apprentice, then from there I went to the drafting room. That is at the Industrial Works. I worked in their drafting room for two years.

Q. Was that in the nature of design and development work? A. Yes, sir.

Q. Go ahead? A. And then I worked for Ammerman & McColl and there we did general engineering work. They were consulting engineers. They took on all kinds of work.

Q. All sorts of problems in various industries? A. Yes, sir.

Q. It was not limited to any one industry? A. No. They were listed as consulting engineers.

Then from there I went to the Bantam Motor Truck Company on engineering. I worked on the engine, designing the engine.

(1191) The first one we designed was a two-cylinder one, and then the next one designed for that truck was a four-cylinder one, similar to the Ford engine, four-cycle, and then from there I went to the Trio Manufacturing Company, and they were manufacturers of automobile parts.

There I worked in the drafting room as a designer and also in their tool room as a tool maker.

And then at Ford's I worked in the tool room there and in the designing department.

Q. When you first went to the Ford Company? A. I went there as a draftsman.

Q. Then to the tool room? A. Yes, sir.

Q. And then to the present department? A. Then back in the present department.

Q. How long was it after you went with Ford that they put you into the designing and developing department? A. I did that right from the start.

Q. You went right into that department? A. Yes, sir.

Q. Then a short time later, how long later was it, you went into the tool room? A. The tool room? Let's see. 1921. 12. 9 years.

Q. You were in the tool room? A. 9 years. No, you asked me how long was it that I went in the tool room.

Q. How long after you first went with the company that you went to the tool room? **(1192)** A. That was 9 years.

Q. You were in the designing and developing department 9 years? A. That is right.

Q. And then in the tool room one year? A. Yes, sir; and then back in the designing.

Q. What was your position in the designing and developing department when you moved into the tool room? A. I was made a foreman shortly before I went into the tool room.

Q. Foreman of what particular work? A. In the designing department.

Q. Designing what? A. At that time I didn't have the office I have now. We did everything, machinery, jigs and fixtures, multiple heads, gauges, chucks and dies, all the equipment necessary for production.

Q. And you were a foreman at the end of 9 years? A. That is right.

Q. You had been there how long? A. Two years. I was made a foreman, I believe I testified to that, in 1919.

Q. And how many other foremen were there in that department when you became a foreman? A. Well, there were two more besides me.

Q. Now, was this move into the tool room in order to give you broader experience? A. I don't know what the company had in mind, because it was not long after I got back into the drafting room, after working in the tool room for a year, and then they made me a direct assistant **(1193)** to Mr. Emde, who was chief.

Q. He was the chief of the department you now head? A. Yes, sir.

Q. How many men would you say were employed in your department now? A. I have about 135 draftsmen. That is not the exact figure, but it is within five.

Q. And the number varies from time to time? A. Yes, it does.

Q. I think you said it did. A. At one time we had 483, I think is the exact figure.

Q. How are the men picked for your department? A. I pick them.

Q. Well, from what source or sources, or what are the qualifications you demand in a man you pick? A. Oh, we like to get men who have had shop experience and some technical training and they should be versed in higher mathematics and be able to make a neat drawing.

Q. How are the foremen selected in the department? A. I am doing the selecting since I have full charge, and I select those for their ability that they show when they are on the board.

Q. Ability in designing and developing? A. Yes, sir.

Q. Now, tell us a little bit how your department functions. Suppose there is a machine giving trouble in one of the various departments in the plant, how does that get to your knowledge? A. We are notified by the building superintendent.

(1194) Q. If a machine was giving trouble, you wouldn't know about it, except through the building superintendent? A. That is right.

Q. And when he notifies you, state what is done then? A. Why, we immediately examine it. If it is serious enough I go down myself, and if it is not so serious, why, I send one of my assistants down and he usually takes a draftsman or designer right with him.

Q. How many machines of a special character would you say that you personally designed and developed, or had anything to do with the design and development of during your stay in this department? A. You mean while I was on the board?

Q. No, while you have been in the department, from the beginning to the present time? A. From 1912?

Q. Yes. A. You mean personal contact?

Q. Yes. A. Oh, I would say in rough figures 200.

Q. Now, amongst those 200 there were, no doubt, some very outstanding and ingenious and intricate machinery, isn't that true? A. Yes, sir.

Q. Could you name a few of them without divulging any secrets? A. Yes, sure.

Q. A few of the outstanding machines you have developed?

Mr. Farley: We don't have any secrets.

A. No. I can remember the first special machine that I designed myself, and that was the machine for the magneto coil. This **(1195)** machine pulled the coil tight, sized the hole and sealed it, locked it, all in one operation. That was done separately in the department before that. That is one.

Q. That was all automatic? A. Oh, yes.

Q. There never had been any machine like that before? A. Not before then, no. And there is a machine for rolling the roller bearing sleeve to size, cam shaft milling machine.

Q. There never had been anything like that before, either? A. No, no. A press for making cylinder sleeves. That is just recently. We are working on that. Do you want me to name all of them?

Q. I just wanted a few of the outstanding ones? A. Those are the outstanding ones.

Q. Your men never go about the shop looking for trouble, do they, I mean, observing the operation of machines and seeing if you can improve them? A. No, sir; that is the job Mr. Herklotz has.

Q. Does he do that? A. Yes, sir.

Q. He is in your department? A. Not any more, no.

Q. But he has contact with your department? A. Yes, sir; direct.

Q. Does he ever come to you direct? A. Oh, yes, every day.

Q. If such a machine isn't working well? A. That is right.

(1196) Q. How long has he been in that capacity? A. He was doing that when I came to the Rouge. That was in 1926.

Q. Does Herklotz have a staff directly under him? A. Yes, he has, I would say, roughly, about six or seven men. That work was at one time right in our department, directly in our department, and then we segregated that, because it really didn't pertain directly to designing so we separated that part of it.

Q. Then you have two sources from which you may get information or instructions as to the operation of a machine in the plant, is that right, one through the building superintendent and the other through Mr. Herklotz? A. And sometimes from the department foreman, too.

Q. From the department foreman? A. From the department foreman, yes, sir, and then sometimes just through a communication, not a telephone call, just a regular communication that goes on the record.

Q. Suppose the department foreman told you that a machine was not working as well as he thought it should, would that be enough instruction or authorization to your department to do something about it? A. Yes, sir.

Q. And the same would apply to Herklotz? A. Yes, sir.

Q. Any other sources? A. Oh, I would say that about covers it.

Q. Well, now, you have been head of this department since when? A. 1926.

(1197) Q. 1926? A. Yes, sir.

Q. During the time you have been head of the department have you received from any one of those sources any complaint of the operation of the Walcott lathe? A. In which way?

Q. That they weren't performing satisfactorily? A. Oh, I would say that Mr. Herklotz took care of most of that trouble.

Q. What trouble? A. That they had on the Walcott machines.

Q. But no complaint or information about it came to you? A. No, sir; not that I remember.

Q. And so far as you know, there was nothing at any time done in your department respecting the Walcott lathes? A. No, sir.

The Master: Do you think you would know about it if something had been done in your department?

A. I believe so.

* * * * *

(1200) Q. What do you personally know about this third cut you spoke of on the Walcott machine? A. I know it was added.

Q. You know they actually used some or all of those six machines to take a third cut? A. I wouldn't say that.

Q. Were the six machines bought in 1929, just the same as the ones you had, Walcott machines you had? A. I believe so.

Q. When, in your department, do you determine to destroy patterns or drawings? A. When the pattern loft gets all clogged up.

Q. Whether the machine is of any value or not? **(1201)** A. Usually it is machines that have been discontinued.

Q. You consider them obsolete, do you not? A. Yes, sir.

* * * * *

(1202) Q. (By Mr. Michael): Mr. Pioch, on your direct examination you said something about the addition of a straightening operation for the Walcott machine? A. That is right.

Q. I didn't just get clear what your reason was, why that addition was necessary? A. Well, I gave my reason as that the shaft had to be straightened so the tools of the lathe would take a more even cut, whereas on the shaper that was not so necessary, because our tools were more rigid and another thing, a planer tool and a shaper tool will take a heavier cut than a lathe tool will, conditions being equal.

Q. Well, what was there in the operation preceding the turning or shaping that made it necessary to straighten; what was it that made the shaft crooked, in other words? A. Oh, you get distortion when the shaft cools off in the forging. You get some distortion when it cools. It doesn't stay straight.

Q. So then you straighten it? A. Yes, sir.

(1203) Q. Didn't you straighten with a shaper operation after the forging cooled? A. Yes, we straightened, but there are in some pieces, cases where we straightened the piece maybe four or five times before you finished, and those straightening operations are always to help the machining operations.

Q. Well, now, as I understand it, you have got a forging coming out, is being cooled, after it is cooled you straighten and you do that both to the shaper and the Walcott machine? A. Yes, sir.

Q. What is your addition, then? A. Well, in handling the stock, the work, if the same work that I center this shaft—

Q. Yes. A. For both operations and then we re-center again and then we might re-center the third time. The same way with the straightening operation. We straighten after the forging, we straighten before certain machining operations. We go along and do some more operations, this piece goes out of shape, you take metal out, it springs out of shape, and you have to re-straighten it.

Q. I am trying to find out what there was in the operations preceding the turning or shaping that necessitated the straightening, outside of this cooling off of the forging? A. Well, they must have found out that the shaft went out of shape enough so that it needed another straightening operation.

Q. Do you have any personal knowledge of that? A. Only as I stated yesterday, that I knew that they had to add another straightening operation.

Q. How do you know that? **(1204)** A. Well, just from knowing it.

Q. How do you know it? Did somebody tell you? A. No, it was added in the department.

Q. In what department? In the cam shaft department? How do you know that? Did you add it? A. I saw it.

Q. You saw them straighten it? A. The shop added it. I did not add it.

Q. I mean were they straightened after the forging cooled off? A. Yes, there is a straightening operation, always was there.

Q. Yes. Was there any other? A. Yes.

Q. Where was that? A. Before the turning of the cams.

Q. But you know they didn't do that with the shaper? A. No, sir.

Q. Now, why did they do it, do you know why they did it on the Walcott machines? What occasioned the straightening on the Walcott machines? A. So the tools would stand up longer.

Q. Was the shaft crooked when it got to the Walcott machine? A. They wouldn't have added the operation if it hadn't been.

Q. What made it crooked? A. The machining of the metal before that, the operation before that.

Q. Did you follow the same practice when you used the shaper? A. I don't think so.

Q. Then the shaft was crooked when it went into the shaper? **(1205)** A. Yes, sir. It must have been the same amount.

Q. The same amount of crookedness? A. It must have been.

Q. And in the shaper, how would that be taken care of? A. Well, the action is not the same.

Q. That is true, but how would the action in the shaper take care of the crooked shaft, wouldn't there be any distortion? A. Well, there was another reason there, that when the tools come down they straightened the shaft automatically, that is, the pressure of the cut in the shaper.

Q. How about between bearings? A. Of course, the shaper had, the shaper had enough extra bearings on it.

Q. Three steady rests? A. Yes, steady rests.

Q. You are positive of that? A. It shows on our print.

Q. I will get to that in a minute. You are sure, though, you saw the shapers work? A. Yes, sir.

Q. You know they had three steady rests on them? A. I know that they were on there, yes, must have been.

Q. You know that from memory of seeing the machines? A. No, I know that just as well as I know they must have had a motor to run it.

Q. You are just assuming they were on there? A. No, sir.

Q. Do you know they were on? A. Sure, I do.

(1206) Q. From what do you say that? A. From the drawings.

Q. You are not saying that from seeing the machines? A. I don't remember. That is too far back. I wouldn't remember every detail, this and that, that was on that machine. I couldn't swear to that.

Q. Well, was it the fact that there were three steady rests in the shaper; that you were able to machine the shafts in the shaper without straightening? A. That certainly helped it.

Q. Is there any other thing that helped it? A. I don't know. I wouldn't say so.

Q. Let us assume we put three steady rests in the Walcott machine, would that have avoided straightening? A. That would have improved it.

Q. Would it avoid it to the same extent as in the shaper? A. Very likely.

Q. Your department was never consulted about this requirement for straightening? A. No, sir.

Q. Who was responsible for it, do you know? A. I couldn't say. I believe that idea originated in the shop. I couldn't say. There are many cases where the shop men had an improvement on an operation that we were not notified about.

Q. Would there have been any difficulty in adding two more steady rests in the Walcott machine? A. Well, I couldn't say. Very likely it could have been done.

Q. It would have been very simple, wouldn't it, just as simple as **(1207)** in the shaper? A. I don't know. I think it could be worked out.

The Master: Is it possible that your standards of production were higher in 1924 and 1925 than they had been in the preceding period when the shaper was used, which prompted the production department to add this straightening operation, or would you know as to that?

A. The standards of production? I would say they have been improved from year to year, like adding an operation, we will say, in order to improve the product.

The Master: Do you know of other cases where operations have been added?

A. We improve the quality of the work.

The Master: Do you know of other cases where operations have been added solely for the purpose of getting a better finished product?

A. Yes.

The Master: Is that common at the Ford plant?

A. Where we have trouble. You take on our valve holes in the cylinder block, we finish that hole with 7 different operations.

In other words, we go in there and take a certain amount of metal out roughly with a drill, and then we go in

there with a reamer, and then we go in there with a bore tool two or three times, and finally cut it with a single high-speed tool.

The Master: It is perfectly possible the shapers were started out in 1925 and ran down to 1930, and then the company decided to change it, but at first one straightening operation subsequent to the forging was sufficient in the early days, and **(1208)** then they thought they ought to install some more straightening operations, to get a better product?

A. To increase the production.

The Master: Not to increase production?

A. But to increase the production off the machine.

The Master: I suppose.

A. If they had added one straightening operation, that might have increased the efficiency of the machine, that is, the tool wouldn't have to take off so much.

The Master: It might have cut down a little time on the tool changes?

A. Yes, it would have cut down the time.

The Master: You might have gotten a better result by cutting down the grinding time less and also it would result in fewer shafts being scrapped?

A. That is right.

The Master: And also would have resulted in a better product which would have satisfied the consumers of the Ford automobile?

A. That is right.

The Master: To a greater extent than before?

A. Yes, sir.

The Master: Go ahead, Mr. Michael.

Q. It is true, isn't it, Mr. Pioch, that your tolerances on the A production were much more rigid than on the T production? A. Yes, sir.

Q. Did you know that the Walcott Lathe Company furnished these machines with more than one steady rest? A. No, I didn't know that.

(1209) Q. Just for the record, I call your attention to Exhibit 41, page 1015 of Volume III, and will ask you how many steady rests you see there? A. I don't see any. I don't see any on here, the photograph is so bad.

Q. Do you know what these are here that I point to, these four devices along the front of the machine? A. Is that a Ford shaft?

Q. I don't think so. A. I don't think so, either.

Q. But do you recognize those? A. That is somebody else's stamp there.

Q. That is quite right. A. Yes, I know what they are. They are steady rests.

Q. How many are there? A. There are four of them there. That is to take care of the design of the shaft. That was designed around the work piece again. If we had four bearings on our shaft, we would have had four steady rests.

Q. Couldn't you use a steady rest between cams without having a bearing? A. Yes, sir.

Q. Where did you get your instructions to develop a shaper for the turning of the A shaft? A. A shaper for turning?

Q. A shaper for shaping the A shaft? A. For shaping the A shaft?

Q. Yes. A. I didn't shape any A shaft.

(1210) Q. I understand that. But you recently designed a machine that you say you might have used? A. Just recently?

Q. Yes. A. Oh, I got that from Mr. Farley.

Q. And that was 6 or 9 months ago? A. I believe somewhere in there, yes, sir.

Q. What were the nature of the instructions? A. He came up and asked me if it would be possible to see what I could do to design an attachment onto the shaper that would machine all these cams at one time.

Q. Did Mr. Farley suggest how to do it? A. I told him after looking at the drawing I think I told him right away, I think that is possible. I will get the drawings out and we will look at it.

Q. Did he say an attachment when he talked to you, or was that your idea? A. Well, I think he said attachment, because it would have to be an attachment.

Q. You couldn't do it in any other way than by the use of an attachment? A. Yes, we could have re-designed. If you want me to say this, I think we could design a shaper that would beat the Pioch milling machine and the Walcott machine and everything else that has ever been done before.

Q. With your present knowledge? A. Yes, sir.

Q. You could even beat the Westinghouse? **(1211)** A. I believe so. I wouldn't guarantee the same finish as we get off the milling machine, but so far as production is concerned, I think I could do it with our present knowledge and experience that we have had.

Q. What did you do about the matter of this shaper after Mr. Farley talked to you? A. Well, I gave that job to a man by the name of Boesen.

Q. What did you tell him? A. Well, he is another foreman in the department.

Q. What did you tell him? A. I told him to get the shaper drawings out, that is, the assemblies, and we discussed the thing, and I believe it was his suggestion as to how we are doing it, that we finally hit onto it. It is ideas you have. One suggests this and another suggests that, and it builds it up. That is usually the procedure.

Q. Usually you make lots of sketches while you are talking? A. Yes, sir.

Q. This wooden model here in the courtroom is all the further the thing has progressed? A. That is correct.

Q. You never tried it out? A. No, sir.

Q. Well, tell us, will you, by reference to this wooden model just how these tools work? A. Yes, sir.

Q. The wooden model I refer to is Exhibit 256? A. Oh, this one?

(1212) Q. Yes. A. Well, we will take the upper head, numbering these cams from the front, from the flanged end of the cam shaft, is tool number 2, 3, 4, 6, 7 and 8.

They are controlled to machine the pear-shaped cam from a master cam that is driven off from the machine above.

And as the work piece is driven off from another shaft, it gives it a rotary motion.

The work piece is held in a slide that travels to and fro past the tool.

The tool movement 1 and 5 follows, rather generates the pear-shaped cam again by another master cam shaft that has been added and driven from the machine, and that is also carried—these tools are carried on a slide that travelled to and fro and make their respective cut on the work as the work piece travels to and fro, tools number 1 and 5 are travelling to and fro, but with a speed twice that of the work piece. I think that will explain it.

Q. Do you think you would have any trouble loading and unloading that machine? A. Well, I don't think so.

Q. You have got 6 tools, have you, coming down from the top? A. On the top.

Q. Two from the front and three steady rests? A. That is right.

The Master: How did the operator load that machine?

A. Well, this here, your Honor, would be on a carriage that would pull.

(1213) The Master: Pointing to the front attachment?

A. The front attachment, would pull back.

Q. By hand? A. No.

Q. You would have to turn a wheel or something to run it back? A. I could fix this model here to show that.

Q. I don't doubt that? A. Yes, sir. I mean I could build the machine that way, too.

Q. But you would have to turn this attachment back before you loaded the machine? A. Oh, yes, you would have to slide back, yes, sir.

The Master: I was going to say the loading would take some extra time over the loading of the original shapers used on the Model T, because of the sliding back operation?

A. Because of the sliding back operation?

The Master: Yes, it would take more time to load Exhibit 256 than it would Exhibit 237?

A. Yes, I would say maybe two seconds. That is an approximation.

Q. Isn't there also a delay due to the fact that these tools have, after they feed across the cam, I am speaking of the two tools in the front, have to move back again before you move this thing back? A. No.

Q. How does that work, how would that work? A. You mean it takes more time now than it did before?

Q. Well, the tools before were stationary? A. That is right.

Q. You did not have to await any tool movement before you loaded **(1214)** the machine? A. Yes.

Q. You just finished a cut and took the thing out? A. That is right.

Q. But here what would happen after you finished the cut? A. It would slide back.

Q. While the tools were being drawn to the right? A. After the work is done.

Q. Yes, but where are the tools when the work is cut? A. They would stop here.

Q. Then these forward tools on the attachment would have to move to the right after they took the cut before you moved the carriage back? A. That is right.

Q. That would take time, too, wouldn't it? A. That is what I said. That would be, say, it would take two seconds to slide that back.

The Master: Mr. Michael is not talking about removing the work piece. You are talking now about the movement of the tools after one cut of the machine to get ready for the next cut on the same cam shaft?

A. Yes.

The Master: Did you understand?

A. I understood that.

The Master: Well, would you have this whole attachment sliding back?

A. Yes.

The Master: And sliding over?

(1215) A. Just sliding back here, say about three inches.

The Master: Sliding back alone wouldn't get the horizontal tools in position for the next cut, would it?

A. No, you put the piece in and then start the machine and it would slide in and then start going back and forth.

The Master: All right. After you put the piece in and you started the cutting motion, the attachment, the horizontal attachment would slide first to the left to make the first cut?

A. Yes.

The Master: And after the first cut was completed the shaft would revolve a little bit to prepare the work piece for the next cut?

A. Yes, sir.

The Master: And to get the horizontal tools in position for the next cut, would the attachment then slide out?

A. After it had finished the cam, yes.

The Master: Not after it had finished the cam, but after it had finished one cut?

A. No.

The Master: The attachment wouldn't slide out at all?

A. No, sir; that attachment stays in place until it finishes the whole cam. You see, the motion here.

The Master: I think that was the problem?

A. Oh, I see. No, you would not have to move that back.

Q. That was one problem? A. You wouldn't have to do that.

Q. However, after you finish a cam, the tool is over here? A. Yes, sir.

(1216) Q. Over to the left? A. Right there.

Q. When you finish it it is over to the left of your cam? A. Yes. I understand now.

Q. Now, what happens? Don't you have to wait until the tool goes back on the idle stroke before you pull the attachment in? A. Yes. Now, it is ready for the next cam shaft.

Q. After you pull the attachment back? A. Yes.

The Master: Is that an extra operation necessitating a longer time than without the attachment?

A. That would take an extra two seconds, you mean to get this out of the way?

Q. Not only that, but also get the tool back in? A. That isn't extra time.

Q. None of this was in the shaper as you used it? A. No, but this was.

Q. Those tools are stationary? A. Yes, and this is in the position as it was in that machine right there, that is, the work piece.

Q. Yes, but you had no movement of an attachment of tools? A. No, but watch this here now. That shaper there did not stop in that position. It stopped in this position.

The Master: As the mechanism swings back?

A. There is no extra time there.

Q. No extra time there? A. No, sir. Don't you see that? I see what you mean. You mean if the machine would have stopped at this position on the original (1217) cam shaper. It didn't. It stopped back here, so there is no extra time there.

The Master: As you complete one cut on either shaper and get ready for the next cut, you have to have, well, a non-cutting stroke of the shaper to bring it back to the starting point?

A. Yes.

The Master: Because it wouldn't cut on the return stroke?

A. No, sir.

The Master: Now, with your re-designed machine you have to have the vertical tools moved back as they did before to get ready for the next cut, and you also have to have the horizontal tools moved back?

A. Yes, sir.

The Master: Does that increase the time of operation?

A. No, sir; it does not, because the added tool is in the same position as the tools that are in the upper head.

The Master: It moves back at the same time as the upper tools do?

A. That is right. As the work piece carrier carries back—we will say it is over here. That tool has finished its cut. We will say that is the last stroke on that machine, I mean the last cut across there. Then the machine has to come back over here for the next piece, so this did not add any more time to the machine, this movement.

Mr. Farley: Let the record show when the witness said on that machine, he pointed to the Model T cam shaper, Exhibit 237.

A. Yes.

(1218) Q. (By Mr. Michael): Did the tools in the shaper as used at the Ford plant raise up away from the work when the work moved back for another cut? A. On every cut?

Q. Yes. A. Oh, yes. The whole head moved back, just, say about two or three thousandths, just enough to clear the work.

Q. And then also you had this part. A. There was a hand wheel out here that you could raise this whole head up.

Q. Those details aren't on this wooden model? A. No, but it shows it on the prints.

Q. You had to provide something in the attachment for withdrawing the tools on the return stroke? A. Yes.

Q. That is not shown in this wooden model? A. No. On this attachment, if we built a shaper like this, we would duplicate the same mechanism that we have got on this head here for moving the tools back on one cut a couple thousands, the same as they do on the upper head.

The Master: With your attachment, you have a movement of the tools the same way you do as with the original shaper, except it is twice the speed of the original shaper, because it is moving in the opposite direction?

A. That is right.

Q. In the original shaper, the tools don't move at all.

The Master: I beg your pardon?

Mr. Michael: The work piece.

The Master: Opposite direction of the movement of the **(1219)** work piece?

A. That is right.

The Master: What you really have here with the attachment is a combination of both a planer and a shaper?

A. Yes, sir.

The Master: As I understand the two forms of tools?

A. Yes, sir.

Q. As I understood, these horizontal tools actually chase the work, finally overtake it and finally overrun it? A. Yes, sir.

Q. Did you ever see that in a shaper before? A. No, sir. You see, in a regular shaper your work is stationary and the tool moves across the work.

Q. Yes. A. In this case, like the Master pointed out, this is a combination of a planer and a shaper. The upper head is the planer part, representing the planer part and the lower head is representing a shaper. In a shaper the tool moves. This is moving, and in a planer the work moves and the tool is stationary. That is the upper head.

Q. Where did you get this idea of making the tools chase the work? A. I believe that was Boesen's idea.

Q. You didn't suggest that? A. No, sir.

Q. It never occurred to you? A. Well, no, I would give him all the credit for that.

Q. It is somewhat similar to these horse-race machines, isn't it, where you put a nickel in the slot and one horse is ahead and **(1220)** finally another overtakes it? A. Yes.

Q. That wouldn't be a bad name for the patent, horse-race patent? A. I think that is very clever myself.

Q. Wouldn't that be a good name for it? A. I don't know.

Q. It is rather descriptive, don't you think? A. I wouldn't want to give it a name.

The Master: You do have a somewhat more complicated situation with this re-designed tool than you had with the first; you have more parts?

A. Oh, yes. This would all be additional. That is obvious.

The Master: It would probably get out of order more often?

A. Where you have more moving parts you have more trouble. That always runs hand in hand.

The Master: That attachment, as you operate it, is in synchronism with the driving mechanism in the main part of the machine?

A. As I said before there, if we had to design a new shaper I wouldn't design it like this. We only show what could be done if we had the shapers at that time and had been forced to use them. We would have had more trouble with those. I can't see anything else but that, because you have more moving parts. You have got all that mechanism that is wearing.

The Master: Would you have more trouble with the tools themselves breaking? Is there any more pressure on the tools that might cause difficulty there?

A. I don't believe so.

(1221) Q. Hadn't you this difficulty in this model, Exhibit 256— A. Yes.

Q. You have six tools bearing down on the top of the shaft? A. Yes.

Q. The pressure is considerable, isn't it? A. Yes, it is.

Q. You have only two tools coming in from the front? A. Yes, sir.

Q. Those relative pressures are very unequal, aren't they? A. Yes, sir.

Q. Wouldn't there be some difficulty in the cutting operation due to that? A. No. We have got our steady rest.

Mr. Farley: Just a minute, Mr. Pioch. Suppose you get a piece of clear paper and make a sketch on that.

A. All right. We will call that our steady rest here.

The Master: Mark that S.

Q. As you have drawn this slot in here it is much too high, the way it was? A. It doesn't have to be that high.

Q. This steady rest here doesn't even come up to the center line of the shaft? A. That is right. Thanks. It doesn't have to come any higher anyway.

Q. It has to come up at least to the center of the work piece? A. That is right. I show a clearance there. Now, here we have the six tools, have we not?

Q. Yes. Just mark that top tool, six top tools. **(1222)** A. Six?

Q. Yes. A. Six top tools, and we will represent the six top tools with six inches, is that all right? I mean as a line of force. Now, we have two tools in that direction, two front in that direction. We will represent them by a line two inches long.

Q. These are the six top tools? A. Yes, these are the six top tools. And we will say each tool—well, any amount of pressure you want on each tool, assume 100 pounds on each. This would be units. That is a good description. Units for six top tools. Units for six.

Q. Tools? A. Top tools. Now, then, these tools represent a force in this direction and those represent a force in this direction.

The Master: As shown by the arrows?

A. Yes, sir. Now, then, the resultant would be on our steady rest in that direction.

The Master: Now, you are showing what?

A. I am showing a graphic diagram.

The Master: For the sake of the record the resultant force which you have indicated is on the hypotenuse.

A. Of the right angle triangle. Now, if we come back and duplicate that same angle on to the steady rest, is that about right? Parallel?

The Master: That is near enough.

A. That is near enough. What do we get? We get that force moving originally from a horizontal plane to a diagonal plane, what we call the tangent, an angle whose tangent is .3333. That is **(1223)** changed from this point

on the steady rest to a point over there. You can see how very small that would be.

Q. Mark the first point A and the second one B. A. First point A and second point B. Now, this point is only moved on our diagram about 1/8th of an inch from the center line.

Mr. Farley: Refer to the point.

A. Point A is moved from the horizontal center to point B one-eighth of an inch from A, approximately.

Mr. Farley: Correction there. You said horizontal. You meant vertical?

A. Vertical, yes. So you can see it wouldn't make much difference as far as changing conditions of the steady rest.

The Master: There would be some tendency of these two front tools to spring the work piece to the right in your drawing?

A. No, your Honor—yes, you have this much front end thrust, but the resultant thrust is here.

The Master: Yes, but so far as the front tools, wouldn't those spring the work piece?

Mr. Farley: Rearwardly.

The Master: Toward the rear. There is a tendency to put a pressure on the side of the vertical tools, making an additional pressure to the pressure which you have as the tools cut on the Model T cam shaper, which pressure was only upward and backward?

A. That is right.

The Master: And these tools are not designed to be resistant to a lateral or side pressure, are they? They would move **(1224)** more readily as against an equivalent amount of side pressure as against backward or upward pressure?

A. I don't know whether I understand. These tools here don't affect the cutting tools here.

Mr. Farley: I think I know what the Court has in mind. Mr. Quaife has in mind the proposition that your shaper tool in cutting is making the cut on the side, that is, they are side cutting it?

A. Yes.

Mr. Farley: For your point of the tool making it cut, and then this side edge here doing the cutting, assuming your shafts were in that direction.

A. Yes.

Mr. Farley: If you add to the other pressures involved a pressure of cutting force of these tools here—

A. Yes.

Mr. Farley: It is going to complicate matters by the cut that you would be taking at the side edge.

The Master: Yes. I didn't know the shaper tools were cutting on the side.

A. They do, so that wouldn't affect the upper tools at all, these added tools wouldn't affect that.

Q. (By Mr. Michael): These tools you have in this wooden model are only representative, they are not shaped like the real shaper. A. This is their shape.

Q. Set in diamond fashion? A. That is right. They were made—this part? It exactly represents the tools.

(1225) Mr. Farley: With a little side rake on them in this direction?

A. Yes. Shall we use this sketch?

Mr. Farley: I offer this sketch as Exhibit 263.

(The sketch was marked Exhibit 263.)

The Master: It is admitted.

A. I didn't measure the length of that resultant line. Six and one-fourth units. I want to make sure you understand this here. If you had six inches here, that six inches—

The Master: You mean 600 pounds?

A. In a vertical pressure, that addition of the two front tools would have moved that force, we will say, to the right, to the back of the machine, at the angle I gave there of tangent .3333, and that 600 pounds would have been this angle in this direction. We will call it 630 pounds. 6.3 units is the resultant.

The Master: That is it approximately?

A. Yes. Somebody might figure that out.

The Master: Suppose we take a brief recess.

(Recess.)

Q. (By Mr. Michael): For the record, I want to just bring out, if we can, what has been added to this horse-race machine. I am not using that in any funny way. I like it as a descriptive term, as compared to the old shaper. As I understand your testimony you have added this whole table that overhangs the front of the machine? A. Yes.

Q. And you have added the tool holders carried by that table? A. Yes, sir.

Q. And you have added the shaft and the master cams for moving **(1226)** those tools in and out? A. Yes, sir.

Q. You have added the mechanism for moving the whole table in and out? A. Yes, sir.

Q. The mechanism for moving the table longitudinally of the shaft? A. Yes, sir.

Q. And you have added the gears for synchronizing the revolution of the master cam with the—in the attachment, with the revolution of the master cam in the machine proper? A. Correct.

Q. And you have added the mechanism for moving the—that is, you have added the mechanism for moving the carriage, the tool carriage of the attachment longitudinally of the machine? A. Yes. I believe you stated that once.

Q. In addition to that are there any things that you added as compared to the old shaper? A. No, sir.

Q. And you have never done this before? A. No, sir.

Q. And you have never tried it out? A. No, sir.

Q. And you know nothing in the prior art that supports or lays the basis for any such thing as this? A. No, sir.

Q. Mr. Pioch, why, or at whose suggestion did you use the particular drawings or blueprints, Exhibits 254 and 255, on which you show this horse-race machine? **(1227)** A. This is not a machine. This is an attachment.

Q. Well, attachment? A. Yes, sir. Whose suggestion?

Q. Why do you show it on this particular drawing? A. This is the first sketch and we made it on this drawing to eliminate the time necessary to make such a drawing.

Q. Do you know when the old Ford shapers first went into use? A. Yes.

Q. What year? A. 1913.

Q. What is the date of this drawing? You are sure it was 1913? It was not 1914? A. Well, if I can look in my notes I can tell you exactly.

Q. All right. I wish you would do that. A. The first cam shaper went on production on October 28, 1915, not 1913 or 1914, but 1915.

Q. 1915? A. Yes, sir.

Q. What is the date of this drawing, Exhibit 254, also Exhibit 255? A. Exhibit 254 is 11-17-1913, and Exhibit 255 is dated 11, looks like 17-1913.

Q. The same date? A. The same date.

Q. And both of them are marked obsolete, aren't they? A. Correct.

Q. What does that mean? A. That means it has been put out of use.

(1228) Q. Means the attachment has been? A. The machine.

Q. It doesn't mean the drawings are obsolete? A. The drawings are put out of use also.

Q. Do you know when these particular drawings became obsolete? A. I believe our tool card will show that date. I can get that off the record. No, I mean the Z number card. The 18-Z-3 card would show the date.

Q. When these drawings were obsoleted? A. Yes, sir.

Q. Have you got that record here? A. I don't believe I have. I can produce it. Will you make a note of that, Mr. Farley? I want the 18-Z card.

Mr. Farley: 18-Z-3 card, isn't it?

A. Yes, sir.

Mr. Michael: Maybe I can clear that up.

Q. These are copies? A. I don't have a note of it here.

Q. These are copies of two Ford drawings placed in evidence at the trial before Judge Tuttle? A. Evidently.

Q. One is marked Exhibit 62 and the other is marked Exhibit 63. Now, will that help you in connection with this matter? A. No.

Q. Aren't those drawings of the Ford shaper? A. Yes, sir.

Q. And what are the dates of those drawings? A. This one marked Exhibit 63 is dated 4-26-1915.

(1229) Q. What is the date? A. 4-26-1915.

Q. Yes. And what is the date of the other, Exhibit 62? A. 5-18-1915.

Q. What does that mean to you, if anything, those dates on drawings Exhibit 62 and Exhibit 63, with reference to the dates on these two drawings, Exhibits 255 and 254? A. That means there had been another drawing made after this. These exhibits are not exact duplicates of the ones dated 11-17-1913.

Q. No. But they are similar views of the machine, aren't they? A. That is all.

Q. Corresponding views? A. Yes, sir.

Q. And the fact there was this later set of drawings would indicate that these earlier drawings, Exhibits 255 and 254, were at least on the date of the new drawings obsoleted? A. Yes, sir.

Q. And replaced by these new drawings, Exhibits 62 and 63? A. That is correct. That is general procedure in the department; nothing unusual about that.

Q. Well, if you will notice or compare roughly these corresponding drawings, you will note a number of changes in them, will you not? A. Yes, sir. That is possible.

Q. So that the changes no doubt occasioned the new set of drawings? A. That is right.

Q. And this new set of drawings comprises a total of 140 sheets, isn't that right? (1230) A. That is correct. I can't see the number of sheets on here. Oh, here. This will probably explain. That is 18-Z-3, dated 11-17-1913.

Q. That is Exhibits 254 and 255? A. Yes, sir; Exhibits 254 and 255 show a total of some 58, we will call it 58 sheets. Then 18-Z-3 dated 4-26-1915, Exhibit 63 and Exhibit 62, dated 5-18-1915, show a total number of sheets of 140.

Q. Now, you have said, have you not, that the first shaper went into use in 1915? A. That is correct.

Q. From which set of drawings was that shaper made? A. I believe from both. I don't remember.

The Master: Where the two drawings are different and where you have provision for differences in

one, the shaper has to be designed from one or the other. It can't be made from both.

A. It can be made from both. That has happened. You see, your Honor, very likely here is what happened. When this design was started, it was started with these Exhibits 254 and 255 and after it was completed in the drawing room, the tool room started to build this machine, and as they went along the machine was probably 75 percent completed and new ideas were put into effect, additions made and new drawings made, representing the Exhibits 63 and 62.

The Master: Well, the machine as actually constructed would be more likely to follow exhibits—

A. The finished machine would follow the Exhibits 62 and 63.

(1231) Mr. Farley: I wonder if I might at this time call the attention of the Court to Exhibit 246-A, which shows a permanent inventory card for the first shaper. Are you familiar with those?

A. Yes, I have seen them.

Mr. Farley: I wonder if I might be permitted to show the card to the witness?

Mr. Michael: Yes.

Mr. Farley: Does that show the date when the machine first went into use?

A. B-X-3, that is our production department. That shows the date October 26, 1914.

Mr. Farley: From what record did you make that note of 1915, of the machines first going into use? Did you consult the permanent inventory record?

A. No, I didn't.

Mr. Farley: What have you got to say now as to the date when the machine was first put into use?

A. I believe I got the date off this card here.

The Master: This is Exhibit 248?

A. 248.

The Master: Which is a list that was presented by Mr. Herklotz showing the date that the various cam shapers were acquired?

A. 10-28-1915. That corresponds with my note.

Q. Where did you get your note, Mr. Pioch? A. I don't remember. Very likely from this exhibit here.

The Master: Exhibit 248?

(1232) A. Exhibit 248.

Mr. Farley: That list is subject to correction if error should appear.

The Master: That is true. It apparently is not correct in this respect.

Q. (By Mr. Michael): Getting back to these drawings, Mr. Pioch, wouldn't it be true that anything that was used and is shown in the earlier drawings, Exhibits 254 and 255, would have been carried forward into the second set of drawings? A. That is right.

Q. So that any machine constructed after this date, 5-18-1915, would have been made in accordance with the drawings, Exhibits 62 and 63? A. That is right.

The Master: How many steady rests are shown on the drawings, Exhibits 62 and 63?

A. Exhibits 62 and 63? It shows one.

Q. And Exhibits 254 and 255 show how many? A. Three.

Q. Are you sure that the tools were stationary in the shaper as used in the Ford plant, I mean stationary lengthwise in the machine? A. Yes, sir.

Q. You are positive? A. They moved in a vertical position. They were not stationary.

Q. The work was under the tools? A. Correct.

Q. The tools did not move across the work? (1233) A. No, sir.

Q. Do you know Mr. Kindall? Did you know him? A. I had a Kendall working for me.

Q. E. W. Kindall? A. I don't remember his initials.

Q. K-i-n-d-a-l-l? A. Oh, no. I know Kendall, K-e-n-d-a-l-l.

Q. Do you know Mr. Oberhoffken? A. Yes, sir.

Q. Who was he? A. He was a foreman in the drafting room. He was a draftsman, first, like myself, and then he became a foreman.

Q. Did he have anything to do with the design of the shaper? A. I believe he did. He directed the designing of it. The man that designed this machine was a man by the name of Olaf Anderson. He designed the machine.

Mr. Farley: He made the drawings?

A. He made the design and some of the drawings.

Mr. Farley: Under Oberhoffen's direction?

A. Yes, sir.

Mr. Farley: Is Anderson alive?

A. He is dead. Sorry. I might state that he was a very brilliant designer.

Q. (By Mr. Michael): Mr. Anderson? A. Yes, sir.

Q. Now, at the trial before Judge Tuttle, the defendant introduced in evidence an exhibit marked 61, which was in the form of an affidavit attached to these two drawings? A. Yes.

(1234) Q. Exhibits 62 and 63. And I show you a copy of that affidavit and will ask you if you disagree with the substance of it. It was signed, I think, in 1920? A. Do these letters on here refer to these.

Q. The letters show on these prints, on Exhibits 62 and 63. Here is one here. They are put in very light. Here is D. B. Here is G and here is H. Don't you see it there? A. No.

The Master: What are you looking for?

A. Letter G and letter H.

Q. See the H there and the light line going down? Here is the G here. Mr. Farley, have you the originals of these?

Mr. Farley: I think they are over in the office.

The Master: I think it is a G and H, with a fine line. It is very dim.

Mr. Michael: They are Mr. Farley's exhibits. These are just copies. The lettering would show up decidedly on the originals.

Mr. Farley: I have got all the original exhibits over in the office. We will produce those.

The Master: It is very certain that there is an H.

A. Some kind of letter there.

The Master: It is H. I have a very good pair of eyes.

A. We will assume that is G and H there. I see B here.

Q. Yes. A. I see C. That is right. Okay. Well, we will assume that is G and H. That certainly is a confusing description of this.

Q. Well, do you want to make changes in it? A. No, I can't make any changes in that. To me, the description **(1235)** of the operation of that machine is confusing. It couldn't work that way.

Mr. Spohn: You refer to Exhibit 61.

A. Exhibit 61. What I think he meant here when he says it is a cutter to move from left to right, he should have added, "Across the work piece." They did not move. I imagine he meant the cutters did the work from left to right.

The Master: Relatively, I suppose?

A. Yes. That is a poor description of the operation of the machine. I don't know who this Kindall is.

Q. Would your records show whether he was ever in your department? A. Yes, sir.

Q. Will you look at your records, Mr. Pioch, and tell us who I. W. Kindall was, if your records show anything about it? A. Yes.

Q. Can you identify that photograph, Exhibit 52? A. Yes, sir.

Q. What is it? A. It is a cam shaft shaper.

Q. Well, now, photograph Exhibit 52 you said shows a Ford cam shaper? A. Yes, sir.

Q. And how many steady rests do you see in that machine? A. One.

Q. Can you tell by looking at these drawings, Exhibits 62 and 63, how long they remained current? A. No, sir.

Q. Well, suppose you find on these drawings, Exhibits 62 and 63, **(1236)** dates of changes as recent as 1919, would

you say that the drawings were still in effect at that time? A. Yes, sir. Evidently that shows there were some additions or changes made. It says on here the record shows under the column marked changes re-drawn by W. S. 5-22-1919. The next record under this column shows details 196 and 197 added by W. S. 7-8-1919. The next record under the change column shows sheet numbers of pattern QQQ corrected by W. B. dated 8-9-1919, and I might state if this shaper was still on production that you would find changes on our drawings marked as late as last week.

Q. So these notations you have just read from Exhibit 62 indicate under your practice in your department that these drawings were still in effect in 1919? A. That is correct.

Q. Do you recognize this photograph I show you, Exhibit 53? A. Yes, sir.

Q. What is it? A. That is a Ford cam shaper.

Q. Does it look like the same machine as shown in the other photograph, Exhibit 52, or can you tell if they are two different photographs of the same machine, or are they different machines? A. It might be different.

Q. Well, I wish you would compare them and express an opinion on it. A. They look very similar.

Q. Do you think they might be the same machine? A. They might be. Of course, there was more than one machine built, so this might be the same machine and might not.

(1237) Q. How many steady rests do you find in Exhibit 63? A. So far as I can see only one.

Q. And you only find one in Exhibit 52? A. That is right.

Q. Is this the brass tag here on the front of the master cam housing? A. Yes, sir.

Q. Same on each machine? A. Yes, sir.

Q. Do you suppose a magnifying glass would bring out the number? A. Yes, sir.

Q. You don't happen to have one here? A. I am sorry, I left mine home.

The Master: This is 7069 and this is 7836, so they are different machines. 7089.

Mr. Spohn: Mr. Watts ought to make a statement on that. He looked at them last night.

Mr. Watts: I checked them up with a magnifying glass and they are both 7089.

A. Both the same?

Mr. Watts: Same brass tag number.

A. They must be the same machine then.

Mr. Michael: 7089.

The Master: It is pretty clear.

Mr. Michael: You can make that out?

The Master: Yes. I can.

Mr. Spohn: On Exhibit 248 it shows a brass tag number of 7089.

A. That would very likely verify it.

(1238) The Master: Yes.

Q. You mean as the first cam shaper put into use? A. Yes, sir; so that must be the one and same machine.

Q. Can you explain to me now why you selected these obsolete drawings for the building of your attachment as distinguished from these drawings, Exhibits 63 and 62? A. No. The only reason is that these obsolete drawings that I have here as Exhibits 254 and 255 were in our files, and Exhibits 62 and 63, the originals, must have been with Mr. Farley.

Mr. Farley: I think I can explain that. You have no objection, have you, Mr. Michael?

Mr. Michael: I have no objection.

Mr. Farley: We procured and we still have it over in the office, a small, brown manilla folder which apparently was kept in some department that had to do with new machines or inventions, or something of that kind, and it had this typewritten statement of Kindall's, and blueprints from which these photostats were made. I don't know whether you have prints of these in your files or not.

A. I was surprised to see that.

Mr. Farley: I was surprised that you had other drawings different from those.

Mr. Michael: Well, the witness says you had drawings, Mr. Farley.

Mr. Farley: We had these drawings, Exhibits 62 and 63, but I did not have the drawings, Exhibits 254 and 255. They came from his department somewhere.

(1239) A. This was added on here.

Mr. Michael: Your Honor, this Exhibit 61, this certificate signed by Mr. Kindall was merely identified below before Judge Tuttle. We have talked about it here, and I am merely asking that it be preserved in that condition until we hear from Mr. Farley as to who Mr. Kindall was, and then I may want to offer it.

The Master: All right.

Mr. Farley: I have no objection.

Mr. Michael: I offer it now under the same exhibit designation as was used below.

The Master: Do you recognize that form of document as being the regular type or form you have at the Ford Motor Company?

A. No, sir.

The Master: Well, I will admit the exhibit in evidence.

Mr. Farley: I will state, if your Honor please, that is a record which I procured and which I have every reason to believe was a regular record of the company, probably some sort of record made by someone who might have been handling patent affairs for the company at that time, in May, 1920. I rather imagine that was in Jack Harness' time. I don't know.

The Master: Can you tell from these exhibits in evidence, 62 and 63 and 254 and 255, whether or not according to those drawings, the movement of the tool is merely vertical, or was it longitudinal?

A. Yes.

The Master: And you find from those that it is not longitudinal?

(1240) A. That is correct.

Q. (By Mr. Michael): Well, let me ask you this, Mr. Pioch: If Mr. Kindall ever was in your department or connected in any way with this shaper machine and made this affidavit in May of 1920 and attached these drawings,

Exhibits 62 and 63, would you say that those drawings were still current at that time? A. I believe so.

The Master: I think that is a double-barreled question.

A. If he had been in the department, your Honor.

Q. (By Mr. Michael): Let me clear it up this way: From your own personal knowledge, Mr. Pioch, were drawings, Exhibits 62 and 63, still current at the time you stopped using the shapers? A. Yes, sir.

The Master: Mr. Pioch, you said you didn't make any attempt to particularly keep in touch with the organization of the department similar to yours among your competitors, or other companies which are not competitors?

A. Yes.

The Master: Do you or your department make an effort to keep in touch with the kinds of machines that are being put out to perform different types of work that is done at the Ford Motor Company and also in other companies?

A. Yes, sir.

The Master: You have men who go around inspecting machines?

A. No, we do not. It is not worked that way, your Honor. The method is that the machinery salesmen come and present their new ideas.

(1241) The Master: Suppose there is a machine in a plant which is designed as the cam shaper was by men in the plant itself, and is not on sale, and yet is a very superior type of machine to any other type that is performing the particular work, would that ever come to your attention?

A. You mean if that machine was in another place?

The Master: If it is in another plant that is a manufacturing establishment, and if the company is not interested in selling the machine to anyone else, but simply having it for their own purpose in production, do you make any attempt to ferret out information about such machines?

A. No, sir. We would have to go to this place and look over their equipment to find out whether they had new methods, but if the method was known and called to our attention, then we would try to improve our machinery, that is, operations to increase their efficiency.

The Master: Do you know whether engineers from other plants who are competitors or non-competitors frequently visit the Ford Motor Company to inspect their machines?

A. They do, but they come to see our operations through a request and we show them, and that also happens if we hear of a certain particular improved machine, say, for instance, General Motors or Chrysler's, why then we go over there and look at their machines.

The Master: Do you know whether there were ever any requests with respect to the Ford cam shaper by competitors asking about its design and function?

A. No, I don't.

(1242) The Master: You don't know whether any other company ever made a request?

A. No.

The Master: To make a Ford cam shaper?

A. No.

The Master: Or a machine similar to that for their own purposes?

A. No, sir.

* * * * *

Re-Direct Examination by Mr. Farley.

Q. I don't think this is of very great importance, but when you talked about the way in which you selected your foreman, I was wondering which was the most important factor which would prompt you to select, let us say, Mr. McCoskey or Mr. Boesen as foreman in your department, his ability as a draftsman or his ability to handle men, executive ability? A. I would say that is 50-50.

Q. Now, in connection with various interesting machines that you were questioned about which you had devel-

oped, I was wondering about a certain machine which we saw there at the plant, the machine for testing the cam shafts, where the shafts go in on a conveyor and at the end of the machine they are automatically passed or rejected; is that a machine developed in your department? A. Yes, sir; under my supervision. Along with those inspection machines we developed a machine for a push rod and a machine for **(1243)** the valve inserts, that is, to check the valve inserts.

Q. That push rod machine is another machine that is over there in the cam shaft department in a glass case, I think? A. No, the push rod machine is over in the foundry.

Q. I mean to say the wrist pin? A. The push rod machine is in the foundry building.

Q. But the wrist pin is in the motor building right alongside of the glass room where they have the cam shaft testing? A. Yes, sir.

Q. There is one thing that I didn't ask you on direct examination that escaped my attention at the time, and that is the general proposition as to whether or not as a part of the functioning of your department and in connection with Sheldrick's department, who designs the car, does the question ever arise of Sheldrick's department designing something that you would consider when the details came in, and you would find that there might be some difficulties in machining the part from the standpoint of production difficulties? A. Well, that happens. We consult Mr. Sheldrick and work with him and have him so design these particular parts to eliminate those objections.

Q. Does that happen very often? A. Very often.

Q. Is it a matter of every-day occurrence? A. Well, every week, I will say that comes up.

Q. Do you happen to know why the Model A shaft has larger bearings than the Model T shaft? Do you know what I mean? A. Yes. Why it was designed that way?

(1244) Q. Yes, or the reason for that difference in design? A. Well, it eliminates the extra loose bearing like on the Model T.

Q. In the Model T, the bearings were constructed with what we call a split bearing? A. Yes.

Q. When you put this Model T shaft in the tool Exhibit 34, you put the three bearing parts down into a re-

cessed part something like a steady rest you drew of the cam shaft? A. Yes, sir.

Q. Then you had another bearing crank that went over the top and completed the bearing? A. Yes, sir.

Q. Now, whereas in the Model A, the bearings are— A. (Interposing): Integral with the shaft.

Q. Now, does that in any way change the function or operation of the shaft in the motor? A. No, it does not.

Q. And can you state why the bearings on the Model A shaft are made as large as they are, or let me put the question this way: Is there any particular relationship between the size of the bearings and the size of the cams on the Model A shaft, or any reason for that relationship? A. Well, the bearings for one reason, as I see they have this size, is that the bearing diameter reaches beyond the point of this cam.

Q. That is, the throw of the cam? A. And that is made so as to make the assembly possible.

Q. Make the assembly possible, and by that you mean the insertion of **(1245)** the Model A shaft into the motor? A. That is right.

Q. You understand the idea being that if the bearings are made slightly larger than the distance of the nose of the cam from the center of the shaft that you can then insert the shaft endwise into the motor, using solid bearings instead of the loose bearings? A. Split bearings.

Q. That you used on the Model T? A. Yes.

The Master: Does it make any difference in the efficiency of the operation of the motor as to whether you have large bearings of the type of Model A?

A. I don't believe so. The Model T was not as heavy a motor as the Model A. The horse-power rating shows that and of course this had to be rigid. You can compare the two diameters and see that these are larger in the Model T in the cams themselves and shafts themselves.

Q. Is it your testimony that the chief, if not sole reason, for making the bearings larger on the Model A is not because of any requirements of the motor itself, or the smooth functioning of the motor, but rather because it is simpler? A. Simpler to assemble.

Q. Assembly and production of the machine? A. I will say it is both of those reasons.

The Master: In what respect does it improve the operation of the motor?

A. On account of the fact the bearing pressures were greater on (1246) the Model A than they were on the Model T and required larger bearings, the Model A cam shaft with this size diameter bearing would never stand up. It had to be larger than this. Therefore they made the bearing large enough to go over the point of the cam so that it would cover both reasons.

The Master: I see.

Q. If, for example, Mr. Pioch, the use of the shaper had been, or the necessity for the use of the shaper, if you had been confronted with that in 1927, when you came out with Model A production, and let us assume that you would have considered it impossible, or otherwise, to have built a shaper such as you have shown with the attachment, would it have been possible or feasible to have altered the length of the bearings so as to give ample clearance for the old type shaper to get in behind? A. Yes, it would.

Q. And is that a sort of expedient or device that you adopt around the plant? A. We would have had to take the center bearing and one end bearing and made those two bearings shorter by the distance enough to get a shaper tool in front of the cam.

The Master: About how much shorter would that be, roughly?

A. Those shaper tools were about, we could have made about three-eighths of an inch. That would have made the shaft—that would have made the bearing on the shaft three-sixteenths shorter on the end, and—I will correct that, three-sixteenths. I will say one-fourth of an inch on the end bearing and one-fourth of an inch on the center bearing. Then probably we would have made these bearing diameters a little bit larger to make up for (1247) the loss in bearing surface.

Q. Increased the diameter on them? A. Increased the diameter.

The Master: If you increased the diameter you would have to cut away the bearing even further,

because the tool is slanting upward for clearance, and the higher the bearing, the further back you would have to recess it?

A. To clear the tool, yes, sir.

The Master: That would have been more than one-fourth of an inch if you increased the size of the bearing?

A. It would be a quarter, approximately, one-fourth, but I don't know what the diameter of this is. Approximately one and one-half inches.

Q. Have you made the computation? A. Yes, sir.

Q. And what do you find? A. I find that if we had done that, shortened the bearings one-fourth of an inch, we would have increased the diameters from one and one-half to one—1.714.

Q. And that would have been an increase of 20/100ths of the diameter, and insofar as the inclination of the shaper tool itself, in fact I don't think it would have any effect? A. You would have to cut—

Q. 10/100ths? A. That is right.

Q. Less than 1/10 of an inch? A. That is right.

Mr. Michael: For instance, if your tool, your shaper tool **(1248)** was out here like this, and supported by the tool holder at this point, then what?

A. We would have had to cut that support back 1/10th of an inch.

Q. I don't think the Court understood how the shaper would work under these conditions. It would mean you would provide yourself about, approximately a half inch clearance between the edge and the cam? A. Approximately half an inch.

Q. That would be enough to clear the tool entirely? A. Yes. You see, you would have one cam here and this would be the bearing, and that would be, say, the tool support for the increase in diameter, and this would be the tool backing after the increase in diameter.

Q. And suppose you had been confronted with the problem and decided to solve it by a slight change in design of the cam shaft, would that have required any more time or knowledge or effort on your part than in making the computations which you now just made? A. No, sir.

The Master: Is there any necessity or desirability for the center bearing to be exactly in the center between the end bearings of the cam shaft?

A. No, sir.

The Master: If you cut part of the center bearing off, that would throw it a little off center?

A. Yes, it would.

Q. But that wouldn't be of any serious consequence? A. Oh, no.

Q. Wouldn't affect the operation of the motor? **(1249)** A. No.

Q. Now, let me ask you this, Mr. Pioch: You were in charge of the department when the change was made from Model T to Model A? A. Yes, sir.

Q. Now, during that period do you recall the fact that Model T production was stopped entirely in May, 1927? A. Yes, sir.

Q. And during that period from May, 1927 to December, 1927, was all a period of development of Model A? A. That is right.

Q. And in connection with that particular development your department had a great deal of work to do, did it not? A. It certainly did.

Q. You had a great many machines to modify? A. Yes, sir.

Q. Or re-design? A. Re-design, build new, change.

Q. Build new machines. Now, do you recall whether or not in that period of 7 months or more, there was any occasion at all that you can recall where the very thing we have now been discussing, that is, an alteration of some part or design of the car arose, or whether there were any questions of that type that arose, and for production reasons the design was modified in any respect whatsoever. Were there many or any of those? A. Yes, I can name you one in that period, and that was the valve bushing. That was a chilled cast bearing, and we changed that to a soft cast iron, eliminating the grinding operation.

Q. And were there other instances in that connection that you don't **(1250)** now specifically recall? A. Why, if I had time to think, I might name some more.

Q. Now, let me ask you this question: Suppose you had been confronted with the problem in 1927, when you

changed over to Model T—to Model A, and the proposition had been before you and your production department, that you must either use the old Landis grinders for the production of the millions of the Model A shafts that were to come, or to make a change in the design such as you have just discussed of the cam shaft, what would you have done? A. In that case we would have had to change the cam shaft.

Q. And do you think there was any possibility that you would have gone to the Landis grinders instead of changing the cam shaft? A. I don't believe so, no, sir.

Q. The Master asked you some questions concerning changes in the standards of production on the Model T about 1924. Model T production started when? A. In 1928, I believe.

Q. Model T, the old Model T? A. Model T production started, I believe, in 1909.

Q. 1909 or 1910? A. Somewhere in there.

Q. That continued for 17 years, did it not? A. Until 1927.

Q. And approximately 15 million Model T's were built during that period? A. Correct.

Q. Now, are you in a position to know whether there was any **(1251)** particular change, as far as standardization was concerned, during all of those years of Model T production? A. Why, there were a lot of improvements made from the time we started until the time they stopped the job.

Q. Wasn't there any change that you were aware of insofar as machining tolerances, generally speaking, throughout the Model T production, such as occurred when you made the shift from Model T to Model A? A. The limits of the parts were made smaller when we went into Model A production from what we had on the Model T. That means we had higher standards of quality of work on the Model A production.

Q. During the period of Model T production from 1909 to 1927, were there changes being made in tolerances and standards required for the various parts that went into the automobile? A. There were changes made in tolerances during the Model T production, but when we went to the Model A production, the tolerances were more

notably cut down than they were during the time of the Model T production.

Q. You made a more radical change when you went to the Model A? A. Correct.

Q. But still you were making changes and improvements? A. Yes, on the Model T.

Q. Do you have any particular system at the Ford Company to show or to keep track of changes in any of the parts from the beginning to the end of its production? A. Yes, we have a system for that, and we also have another system for the record on the tools.

(1252) Q. Are these the records that I asked you to produce on that particular subject? A. Those are the tool records.

Q. Tools and miscellaneous. These are different records than the engineering information? A. Yes, sir.

Q. These records you have now would not show any changes insofar as tolerances and things of that kind are concerned? A. No, sir.

Q. But engineering information would give that? A. That is correct.

Q. Do you know whether the engineering information cards for the T-410 cam shafts are available? A. I believe so, yes, sir. I say that because I looked up a record for Mr. P. E. Martin on the fly wheel dowel pin.

Q. It doesn't make any difference. A. I will get it. No, it was not the dowel pin. It was the triple gear pin that was pressed in the Model T fly wheel, and he requested the Highland Park record man—and I requested the Highland Park record man to bring out the complete engineering record of this particular part, and he produced the record from the time that the part started.

Q. I know I asked someone over the telephone to bring down the engineering information for the T-410 cam shaft, because I anticipated this subject might arise. I think it was you, and I think you have produced these instead of the engineering information, do you remember? A. You asked me for those cards.

(1253) Q. It was the engineering information I wanted. Is there anything about these particular cards which we have and which are called drawing index that would enable you by consulting them to see whether there had been any change in the standards, production stand-

ards? A. I don't believe these card records would show that, but the drawings would show that, the engineering drawings.

Q. And engineering information? A. Yes, sir.

Q. I think we will probably have to try to produce those? A. All right.

Q. Now, you stated on cross examination, as I recall your exact words, it was something to the effect, or it was that with your present knowledge and experience you believed you could now at the present time design and build a cam shaft shaper that would be faster than the Pioch machine and the Westinghouse and the Walcott, or any of them? A. I believe that could be done now.

Q. Just what did you mean by your present knowledge and information? What did you have in mind so far as the knowledge was concerned? Was it knowledge of this law suit or knowledge of those machines that you had learned about in recent years or what? A. The experience that we have had in the past years.

Q. I am going, in view of the other cross examination and discussion of the two wooden models we have here, I am going to hand you a letter signed by you and addressed to me, dated November 2nd, 1938. Will you please state what that is and **(1254)** the reason for it, or why you wrote it? A. That is a comparison of the—if we had used the cam shaft shaper on the Model A and the Model T. It shows the time, the actual cutting time for the Model T shaft as being 25.3 seconds, and the Model A cam shaft actual cutting time of 29 seconds.

Q. Now, that is a computation by you prepared at my request? A. That is correct, that is.

Q. And in that computation you took the information available on these drawings and were able, by taking that, to figure out exactly the speeds of the machine? A. Yes, sir.

Mr. Farley: I will ask that this be marked Exhibit 264.

(Letter above referred to was marked Exhibit 264.)

* * * * *

(1255) Mr. Farley: I didn't understand, Mr. Michael, whether you wanted me to produce the

original of that typed sheet, of which you have a photostatic ccpy. I think it is Exhibit 62.

Mr. Spohn: 62 and 63.

The Witness: Yes.

The Master: Excuse me a second.

Mr. Farley: Yes, sir.

(There was a short interruption.)

The Master: All right.

Mr. Michael: Well, I think it would be in order, Mr. Farley, if you produced here just until the time may come all exhibits that are not reproduced in the record.

Mr. Farley: Yes. That particular slip of paper I had Mr. Green looking for, he couldn't locate that during the lunch hour. I found the envelope in which that typed description and the originals of Exhibit 62 of those two drawings are the same number.

(1256) Mr. Spohn: 62 and 63?

Mr. Farley: 62 and 63.

Mr. Spohn: Yes.

Mr. Farley: And the system in connection with these as far as their coming into my possession, that when the case started, or shortly before, rather, the trial of the case before Judge Tuttle, I asked them to produce the drawings of the cam shaft shaper, and this yellow envelope that I have in my hand was produced, and it contained the drawings which I have here that are in it. Some of them were not introduced. We selected two of the drawings, they were assembly views to be put in evidence.

Mr. Michael: And they are 61 and 62.

Mr. Spohn: 62 and 63.

Mr. Michael: Or 62 and 63, yes.

Mr. Farley: My knowledge of these particular exhibits is that I was told that was produced in some file that the Ford Company had, which was, more or less, a record of inventions, and, apparently, these particular drawings were put in this envelope at the time the record was prepared in May of 1920.

The Witness: There are some more sheets here.

Mr. Farley: Yes, I know. And, I think, then, with that explanation, suppose we mark the envelope?

The Witness: There it is right on there (indicating).

Mr. Farley: Yes.

(Short discussion off the record.)

Mr. Farley: Supposing we mark this Exhibit 260—I haven't got the last exhibit number—I think it is 263 or '4.

(1257) A Voice: 265.

Mr. Farley: It is 265. Envelope in which Exhibits 62 and 63 and 61 were made, or were filed and received by Mr. Farley.

I might state, too, that the prints here have the reporter's stamp placed on it.

The Master: Yes.

Mr. Farley (Continuing): Exhibits during the trial before Judge Tuttle.

The Master: Yes.

Re-Direct Examination (Continued) by Mr. Farley.

Q. Now, referring to Exhibit 264, I notice that that says: "As per your request, we are giving below data of speeds and feeds for the cam shaft shaper based on information from you of 700 revolutions per minute for drive pulley," and, in that connection, I call your attention to Exhibit 62—63, and direct your attention to the inscriptions, "700 revolutions per minute" on the flywheel to which the arrow part, 115, is directed— A. (Interrupting): No. The part number is this (indicating). That is the sheet number (indicating).

Q. This is the sheet number (indicating)? A. Yes, sir.

Q. All right. The part number would be 6-Z-96-LL? A. Yes.

Q. Now, were you able to make these computations from the information given in these drawings based on the premise that the **(1258)** pulley which we have just referred to and the shaft to which the pulley is attached rotated at 700 revolutions per minute? A. Yes, we would. We would. Those figures are based on that condition.

Q. Yes. A. (Continuing): As shown on this drawing.

Q. Yes. Now, based on the premise then that your main driving shaft which is the one we have been talking about, runs at 700 R.P.M., and having a driven gear with a 13-inch pitch diameter, and a driving gear with a 4⅛ pitch diameter, you determined the speed of the crank by the computation shown in this Exhibit 264 as being 220? A. 220.

Q. Revolutions per minute? A. Yes, that is correct.

Q. Now, the crank to which we are referring is the shaft "S," which was marked on these wooden models, is that right? A. That is correct.

Q. And then for the next— A. (Interrupting): This also—pardon me?

Mr. Farley: Yes.

The Master: Go ahead.

A. Can I talk?

The Master: Yes.

Mr. Farley: Yes.

A. This also bears out the fact that the tools did not slide, but the work piece slid.

Q. Oscillated? **(1259)** A. Oscillated back and forth.

Q. Or "reciprocated" would be the term? A. Yes.

Mr. Michael: By "this," you mean the letter dated November 2, 1938?

A. Yes, sir.

Q. (By Mr. Farley, continuing): Now, then, in the next tabulation you have taken the circumference of the model T cam which you give as approximately 2.9 inches. A. Around that.

Q. 2.9 inches? A. Yes, sir.

Q. And then you divided, you got from the first set of computations the feed per stroke of 1/32, that is, 1/32 of an inch? A. That represents the amount cut.

Q. Feed? A. That is the feed.

Q. That is the feed? A. Yes.

Q. Yes. That is the width of the slice of steel that the tool would take off as it made each stroke? A. Each stroke, yes.

Q. And, then, dividing 1/32 of an inch feed per stroke into 2.9 inch, you have reached the answer of 92.8, and

which you take, then, as 93 strokes for the total rotation of the crank? A. Yes, correct.

Q. Then, you divide the total time, 16 minutes, divided by, or, rather, the time is 92.8 divided by 220, and you got 25? **(1260)** A. That is the number of strokes.

Q. Yes. A. (Continuing): Times 60, divided by the strokes per minute.

Q. Yes. And that gave you 25.3 seconds for the time for the cam shaft to make one complete revolution in cutting the model T cam? A. That is the cutting time, 25.3 seconds.

Q. Now, if the machine made two complete rotations, this time would have to be doubled? A. Doubled, yes.

Q. That would then give 50— A. (Interrupting): 50.6.

Q. 50.6? A. Yes.

Q. The latter being marked in lead pencil upon the Exhibit 264? A. Correct.

Q. And you followed the same process for the Model A shaft of finding the approximate perimeter of the shaft, and divided it by the 1/32 feed, and you get a total cutting time on that for one rotation of the cam, 29 seconds? A. Correct.

Q. And multiplying that by 2, assuming that the cam made two complete revolutions before the machine was stopped and shaft taken out; that gives 58 seconds, is that right? A. Correct.

Q. Now, then, this last one, surface speed of tool, you have taken again your computation which you have arrived at, of 220 strokes per minute? A. That is right, correct.

(1261) Q. And the cutting stroke would take 240 degrees of rotation of the shaft? A. Of the shaft that drives the arm.

Q. And the return stroke? A. 120.

Q. 120? A. Yes.

Q. Perhaps I will let you describe that. I understand that. But I would rather let you testify to that. A. We are calculating the speed of the tool. We take, as we have found, 220 strokes per minute of the slide necessary to finish one revolution, and we calculate the cutting stroke of 240 degrees and the return stroke, 120 degrees of revolu-

tion—that is the number of degrees that the driving gear takes that drives the arm which drives the work slide—now, the distance of the stroke of the cutting tool is 1¼ inches; therefore, with these conditions we get a surface speed of the tool of 34 feet per minute, which—

Q. (By Mr. Farley, interposing): Now, if you give—go ahead. A. (Continuing): —which is very conservative. It is low to what the speeds of the present day cutting tools have.

Q. How about cutting speeds of tools in, let us say, 1924 and 1934. Would 34 feet per minute be too high a cutting speed? A. No. That would be too low.

Q. Do you in your department have any particular standard established for the shop for speed in cutting feet per minute that should or should not be obtained by—or should or should not be exceeded, let us say, by the various types of tools? A. In 1934, or 1924?

(1262) Q. Well, generally. A. To the present day?

Q. Well, generally, do you have that sort of a system in the department? Is your department the one who would establish for the shop, the maximum cutting speed for any particular type of tool? A. Yes, sir.

Q. And, do you keep a record of that sort of thing? A. No, we don't.

Q. Well, now, considering the best type of tool steel available in 1924, let us say— A. (Interrupting): Yes.

Q. (Continuing): —do you have any present recollection of what the maximum speed ordinarily was in feet per minute? A. Our cutting speeds then were between 60 and 85 feet per minute.

The Master: With the kind of material that you would be cutting?

A. Well, yes; that would vary around there. On a piece of steel like this (indicating) of the cam shaft, I would say, conservatively, 60 per feet per minute.

Q. (By Mr. Farley): How about present day? A. Well, we have cutting tools now made of Tungsten Carbide that have a cutting speed of four times that much.

Q. Now, I wonder, Mr. Pioch, you haven't made any particular check, I know, of these two sets of drawings of the cam shafts between—

Mr. Spohn (Interposing): Pardon me, Mr. Farley, before you get into that.

Mr. Farley: It is in reference to this.

(1263) Mr. Spohn: Oh, is it tied up with the case?

Mr. Farley: Yes.

Mr. Spohn: Oh, yes.

Mr. Farley: All right.

Q. (By Mr. Farley, continuing): With Exhibits 62 and 63—with Exhibits 254 and 255, in so far as any change might have been made in the gears for the speed as computed in this exhibit, 262—

Mr. Farley: Mark this, please, Exhibit 265, Mr. Reporter.

(Thereupon, Exhibit No. 265 was marked by the reporter.)

(Discussion off the record.)

A. Now, let me see the other sheet. Compare these two (indicating)—I would say they are exactly the same.

Mr. Farley: I wonder if the Court understands the computation of taking the 240 degrees and 120 degrees of revolution?

The Master: Not entirely.

Q. (By Mr. Farley, continuing): I wish you would explain just what that is, and by referring to the drawing, explaining how the drive operated. You understand my question? A. Yes.

Q. Yes. A. Well, this hasn't got any reference mark here (indicating on blue-print).

Mr. Michael: Do you want him to refer to this print or the other one?

Q. Let me first ask the question, Mr. Pioch. You are now referring to Exhibit 254?

The Master: Exhibit 254 is the one he is referring to.

(1264) A. Yes.

Q. (By Mr. Farley): Well, let me first ask, have you inspected these two drawings sufficiently? 254 is the same type of a showing as Exhibit 62? A. That is right.

Q. That is right? A. Yes.

Q. Now, have you checked those drawings sufficiently to see whether it would make any difference in the explanation as to the mechanism for driving the carriage? A. No, it wouldn't.

Q. Do both of the drawings show the same mechanism? A. Yes, sir.

Q. And, I might, while I am on that, have you also check the other parts of the machine shown on these two drawings to see whether you see any change of any importance that would modify the operation? A. Not the operation, no, sir. There is a difference.

Mr. Spohn: Yes.

Q. Do you know what particular difference there is? A. Well, the one shows the one steady rest, and the other shows three. That is the only difference I see right now.

Q. All right. Now, if you will proceed with your explanation? A. Yes. Well, I don't know whether I would be able to make myself clear on this drawing.

Q. Do you want to use the other one? A. No. It is the same.

The Master: Now, could you explain it without referring to the drawing?

(1265) Mr. Farley: Well, how about the wooden model?

A. Well, the wooden model shows it exactly.

The Master: Well, let's see the wooden model, then.

A. Yes, sir.

We will refer to the wooden model marked Exhibit 237. And we will position the hand lever representing the driving gear of the shaper, and we will position this hand lever at the start of cut and mark same with pencil, start of cut.

Q. (By Mr. Farley): Now, before you start that, Mr. Pioch. A. Yes.

Q. The starting crank is on the shaft, that would be the main driving shaft of that part of the machine? A. Yes.

Q. That when that shaft makes one complete revolution the work carriage will have completed a cutting and return stroke? A. Correct.

Q. All right.

The Master: And that rotates counter-clockwise?

A. Yes. And this shaft rotates facing the machine in a counter-clockwise rotation.

The Master: Yes.

A. We will turn this crank until it comes to the—until the work slide comes to the end of its travel, and mark thereon, a line, finish cut.

Q. You had a line marked on the front of the model, the start of the cut? A. Yes, sir.

Q. And through how many degrees of rotation did you rotate the shaft from the start cut to the finish cut position? **(1266)** A. 240 degrees.

Q. All right. A. Then we will continue to rotate this crank back (demonstrating). It is about there (indicating) to the starting position.

Q. And during that continual rotation of the crank, you have rotated through how many degrees? A. 120 degrees.

Q. I think that explains it. And just one question there. And in those machines the shaft on which you have the starting crank, rotated at uniform angular velocity, is that right? A. Pardon?

Q. The crank which you are manipulating in the actual machines rotates at a constant speed? A. Yes, sir.

Q. At regular uniform angular velocity? A. Correct.

Q. All right.

Mr. Farley: Now, I will offer Exhibit 264 in evidence, and I will offer the brown envelope in which I received Exhibits 62 and 63 in evidence as Exhibit 265. And I will offer as Exhibit 266, the computations made by Mr. Pioch in connection with the change of the center bearing of the Model A shaft.

* * * * *

(1270) The Master: In making these computations for the model A, what kind of a shaper did you have in mind, the style of shaper that is embodied in the wooden exhibit that you had made?

A. Yes, sir.

The Master: And would this be the machine time of that type of shaper?

A. Yes, sir.

The Master: I think the exhibit is admissible. I will admit it in evidence.

Mr. Spohn: Now, your Honor please, with respect to Exhibit 266—do I understand that that exhibit—is this it, Mr. Pioch?

A. Yes.

Mr. Spohn (Continuing): That that sets forth the change of bearings necessary in that, that it had something or other to use in shaping the model A?

(1271) Mr. Farley: Yes.

A. It is to use the shaper without putting the attachment on.

Mr. Spohn: If your Honor please, I object to the offer. It is incompetent, irrelevant and immaterial, all of the testimony on that offer with respect to what modifications could have been made of model A cam shafts. We are here dealing with a standard of comparison, profits, gains, and advantages. I assume that they could have changed their course in many respects. It is not what they might have done. The question is what they did with the infringing machine.

The Master: Would you object to the machines being used as a standard of comparison—well, to make my question clearer, let us take an actual assumption: Suppose that in the model A they had used the same type of bearing as was used in the model T instead of having an enlarged bearing, that the entire shaft had been made of slightly larger diameter, and slightly longer—all increases being the same proportion—but the shape of the shaft being exactly the same as with the model T. Now, before the cam shaper could be used on the model A it would be necessary to at least make the shapers somewhat larger.

Would you say that if that situation were presented it would be impossible to use the model T cam shaper as a standard model of comparison?

Mr. Michael: You mean that if the model A shaft would be the same as the T, except slightly larger?

The Master: Yes.

(1272) Mr. Michael: I don't think that would make any difference.

The Master: It would be necessary to enlarge the model T.

Mr. Michael: I understand not.

The Master: If the shaft were slightly longer, why, you would have to change the position of the tools. You would have to make your shaper of slightly different dimensions.

Mr. Michael: Well, you would have to position your tools over the shaft.

The Master: What I am wondering, to what extent you would take into consideration the modifications of a machine which would have been feasible and simple to make if the defendant hadn't been in a position to avail himself of the infringing machine which he actually used.

Mr. Michael: Well, the law is, as I understand, is pretty strict of what you could do. However, it wouldn't go so far as to permit one instance—suppose the Walcott machine was brought in as a standard. Certainly my objection wouldn't go so far as to prevent the man from changing the master cam on that machine, or re-positioning his tools to cut an identical shaft. I don't think that question is presented here at all. Where a man comes in in 1939 and tells us what he thinks he would have done in 1925 on the car, what parts he would have changed—he isn't changing the shaper.

The Master: Well, I will admit that we are in a **(1273)** slightly different position right now. We are considering the question of not the change of the machine itself, but the change of the part being made. But, I think the general problem there is just about the same.

Suppose the facts were that the model A cam shaft had just a slightly larger bearing than the model T, instead of a very much larger bearing, as far as the end bearings and center bearings were concerned, and

that there was no particular reason for the change that one cam shaft would function just as well as the other, and that it just so happened; that they decided to make the change without any mechanical necessity or advantage of doing so, but that with such a change it would have been impossible to use the original machine for producing the shafts in the same manner in which it was originally designed, couldn't you then take into consideration the probability or the possibility that if the defendant hadn't been able to avail itself of the infringing machine, it would very likely have used the same shaft rather than make any alterations at all in it?

Mr. Michael: Well, personally I had great difficulty, in what he might have done in 1925. I think it is too far in the realm of speculation to even be considered in evidence. And, in your last question you certainly indulged in some rather violent assumptions, your Honor.

You assume that a cam shaft in a motor or an automobile in a rapidly developing industry like motor vehicles can be any old thing they want to make it to put it into a machine that was current in 1914. I would say you are going pretty far afield. The model A motor was a decided **(1274)** advance and improvement of anything Ford has had prior to that. And, now, to sit down here and re-design the cam shaft, knowing that when you do that you would have to redesign a hundred other things. I think we are out of the realm of investigation.

Mr. Farley: Suppose I may be allowed to go on—

Mr. Spohn (Interposing): Still objecting, your Honor.

The Master: Yes.

Q. (By Mr. Farley): Now, supposing, Mr. Pioch, for example, you made a change in the model T, you still have the model T cam shapers available? A. Yes.

Q. And for some reason or other you found it desirable to increase the length of the model T shaft, the cam shaft of the model T, let us say, 5 inches— A. (Interrupting): Yes.

Q. And, let us say you changed the bearings, let us say, assume that you put 2 intermediate bearings instead of one central bearing— A. (Interposing): Yes.

Q. (Continuing): —could you have used the model T cam shapers you had at the plant at that time to machining the shaper? A. We could by making a new head.

Q. You would have had to— A. (Interrupting): You would have had to rebuild the head, and re-space the tools, and re-space your supports.

Q. But that would involve— A. (Interrupting): But it would not affect the rest of the machine.

(1275) Q. It wouldn't change the principal part? A. No. The driving mechanism and the indexing mechanism would remain.

Q. Suppose now you had decided, instead of having the cams 7/8 of an inch long, you would make your cams 1½ inches long, or wide, if you understand what I mean— A. (Interrupting): Yes, sir.

Q. (Continuing): —would you then have been able to use that machine, or would you have to re-design it? A. Yes, we would have to re-design it, because the stroke, I think, is one inch and one-quarter, and we would have to change the entire driving mechanism.

Q. Now, suppose when you went to model A production, you had had at that time, suppose you had been confronted with the question of infringements that we have here now— A. (Interrupting): Yes, sir.

Q. (Continuing): —and you had found it absolutely essential to use Walcott machines? A. No, sir.

Q. I want to state for your information, and I think it is permissible, that the Walcott machine had been charged to be an infringement, and the case was tried that was brought by the Gordon Company against the Walcott Company was tried before his Honor, Judge Simons, and on July 22nd, 1927, Judge Simons handed down a decision stating that the Walcott machine did not infringe the Gordon patent? A. Yes.

Q. In July of 1927, or rather, in the period when you were designing **(1276)** the model A machine, or model A automobile, that period ran from May of 1927 to December of 1927? A. About that time, yes, sir.

Q. And the Ford Motor Company at that time had 16 or 18 Walcott machines already in the plant? A. Yes, sir.

Q. You knew of those machines being there, did you? A. Yes, sir.

Q. Personally? A. Yes, sir.

Q. And they had been in operation at the Ford plant for about three years, to your knowledge? A. Yes.

Q. That is, those machines were purchased— A. (Interrupting): Yes, sir.

Q. (Continuing): —in the early part of 1924? A. Yes, sir.

Q. Now, was there any occasion during that time, during the design of the model A, or any necessity to consider using the shapers in place of the Walcott machines? A. No; I don't remember.

Q. Now, let me see: During the period of your design of the model A, were you in any way associated or connected with the engineering design under Mr. Sheldrick, or did you give any part of your time or attention to the design of the model A car? A. Yes. At that time I was out at the engineering laboratory where the car was being designed every day during the process of **(1277)** the development of the model A car.

Q. And, did you during that time, period of development, consider the design of parts of the model A from the standpoint of production? A. That was the purpose of my being out there, to make suggestions on the design of parts that would fit in with the production machinery.

Q. Did you make any particular suggestions, or did you make one or several? A. I believe I made many.

Q. Very many? A. Yes, sir.

Q. In connection with the computation which you made, Exhibit 266, that computation was based, as I understood it, and had to do only with the center bearing; would you have needed to consider the change of any other part of the cam shaft to have used the model T shapers—let me see—am I correct in assuming that when you talk about cutting the center bearing— A. (Interrupting): No. We were going to change this bearing (indicating), and this bearing.

Mr. Spohn: The center and the end bearing.

A. Yes, that is right.

The Master: Did you make a computation of both?

A. Yes.

Q. (By Mr. Farley, continuing): The computation included both, did it, or just the— A. (Interrupting): Well, wait a minute—no—it just referred—this computation refers to the center bearing.

Q. Yes, I thought I was correct. **(1278)** A. Yes, this is the center bearing (indicating).

Q. Now, with that change, and, assuming that the old model T shapers were still in the shop and available to you— A. Yes.

Q. (Continuing): —what other changes, if any, would you have had to make in the model T cam shaft as shown by Exhibit 237? A. If we hadn't changed the bearings?

Q. If you had changed—we are going to assume that you changed the center bearings. A. Yes, sir; changed this (indicating).

Q. Yes? Now, would it be necessary to do any more than change the center bearing if you were going to use the old model T shapers as they were then? A. No. I believe not. We could—my mistake was turning that crank there. We could turn the crank the other way and make this pressed on bearing on this end (indicating), and cut in the other direction, then we would leave this end bearing the same.

Q. Yes. A. Wouldn't have to touch this.

Q. Wouldn't have to touch this? A. No.

Q. You wouldn't have to touch the bearing on the flange? A. No. That is right. Instead of cutting in this direction (indicating) to the left—

The Master: Well, is this shaft in the right position? Isn't the flanged bearing usually on the left rather than the right?

A. Well, this is the front end. The flanged end is this **(1279)** (indicating).

Q. (By Mr. Farley, continuing): Well, let us turn it this way. A. Yes.

Q. Now, with these— A. (Interrupting): This (indicating) is the part.

Q. (Continuing): —shaft, Exhibit 234, in front of you? A. Yes, sir.

Q. You have the flanged end of the shaft on the left side? A. Yes, sir.

Q. And with the machine as shown in the blue-print which is in front of you, Exhibit 264 or 265, I don't know which one it is—the tools as shown there, or, wait a minute—you are holding the shaft now, the exhibit, physical shaft, Exhibit 234, in the same position that it would be in the machine? A. Yes, sir.

Q. And the tools would be cutting from the left towards the right? A. Yes, sir. That is, the slide would be moving from the right to left.

Q. From right to left? A. Yes, sir.

Q. Now, in that position you would have interference on the large bearing on the flanged end, and on the center bearing? A. Yes, sir.

Q. Now, your testimony now is, that if you had the tools traveling in the other direction, or, if you turn your shaft end for end— A. (Interrupting): Yes, sir.

Q. (Continuing): —so as to bring the shaft, flanged end now to your right hand. A. Right hand.

(1280) Q. Then in making your—which you compute on Exhibit 266, what then would you do then as far as any tool interference were concerned with the bearing now on the left-hand end of the cam shaft? A. Why, under those circumstances, conditions, we wouldn't have to change the front end bearing, but we would have to make, we would have to make the rear bearing a separate piece, that would have to be passed onto the shaft after the shaping operation.

Q. Is there anything unusual about that operation? A. No, sir.

Q. How would that affect the operation of the engine? Would it improve or detract from it? A. It wouldn't affect it any.

Q. If any, it might tend somewhat to improve it, wouldn't it? A. Well, I won't answer that. That would have to be tested, Mr. Farley.

Q. Well, what other changes, if any, would you have had to make in one of the old model T cam shaft shapers, assuming a shaft as you have described it, in order to use that physical shaper as you used it on the model T's? A. We would have to re-space the tools.

Q. Well, how about the master cams? A. And we would have to produce new master cams.

Q. Now, do you know whether or not you made any changes at all similar to that in changing over the Walcott machines from model A to model T shafts? A. We had to do the same thing.

The Master: Model T to model A?

(1281) Mr. Farley: Model T to model A, yes.

A. Model T to model A, yes, and we had to make new master cams and re-space our tools.

Q. Now, when you were cross examined about the wooden model exhibit—

Mr. Spohn (Interposing): Just a moment, Mr. Farley. I thought this was all preliminary yet to the Master's ruling on Exhibit 266.

Mr. Farley: Yes. I will re-offer Exhibit 266, but I just have one more question and I will be through.

Mr. Spohn: Yes.

Q. (By Mr. Farley, continuing): In connection with the cross examination on Exhibit 266, the wooden model, you were asked about a number of parts, and I think the final question was that if you found anything like that in the prior art, as far as the prior art is concerned—do you understand what is meant by the expression "prior art"? A. Well, I believe I do. It is the operation used before.

Q. Used before? A. Yes, sir.

Q. What basis, if any, was there in the prior art for the model A type of cam shaper with the attachment such as you have in Exhibit 256, and such as you have in the drawings 254 and 255, and also the drawings 257 and 258? A. Well, the wooden model A cam shaper as to prior art represents the planer and the shaper. But the set-up of that model, I did not see before, of one set of tools cutting in one direction, and another set cutting in another direction. That was the answer that I had reference to to the question I **(1282)** made before.

Q. Now, how about the principle of operation? Whether or not there is any departure from the principle of operation from the model T shapers, the old model T shapers? A. No, sir, there isn't.

Mr. Farley: I think that is all. And I renew my re-offer of Exhibit 266.

The Master: Do you know whether there were any Landis grinders in existence from the period, 1927 to 1931, and, which, without modification, would have machined, or rough ground the cams on the model A cam shaft?

A. There were grinders then, yes, sir.

Mr. Farley: Without modification?

A. Well, they would have to have new masters.

The Master: Would that have been the only change necessary, do you know?

A. Yes, sir.

The Master: Are you familiar with the operation of the grinder?

A. Yes, sir. That would have been the only change, and new steady rests.

Mr. Farley: And would that change be different, or the same as the change in the model T shaper with the model A cam shaft of the type you just described?

A. It would mean the same change.

* * * * *

(1298) The Master: I am wondering if whether it would be your opinion as to whether it is a desirable feature of a side-cutting tool to have the angle of the upper surface of the tool to be tangent to the work.

A. That is desirable, your Honor. But after you go through all the trouble of tilting the tool, your advantages gained there seem to have been lost in the fact that the tool is not rigid enough.

* * * * *

(1302) Re-Cross Examination by Mr. Michael.

* * * * *

(1303) Q. You were speaking in your re-direct examination of leaving a bearing off of the A shafts? A. Yes, sir; pressed bearing, yes, sir.

Q. Is that it? A. Yes, sir.

Q. Would that have added any cost to the shaft? A. Yes.

Q. It would have also added— A. (Interrupting): Operation for pressing it on.

Q. Operation for pressing it on? A. Operation for pressing it on, yes, sir.

Q. And you would have had to make it first? A. Yes, sir.

Q. (Continuing): Before you put it on? A. That is right, yes.

Q. Now, you said, as I understood you, that this attachment on the race-horse machine was a combination planer and shaper? A. You have reference to the Model A cam shaper?

Q. Well, this machine, the wooden model with the attachment on it. A. Yes, sir.

Q. Is that what you said, a combination planer and shaper? A. You could call it that.

(1304) Q. Well, what do you call it? A. I call it a cam shaft shaper.

Q. Yes. But in answer to a question of Mr. Farley's as to what you based it on, or something of that character— A. I said it had the combination of both machines. The principle of the planer and the shaper.

Q. Yes. A. And that it has that definitely.

Q. How? A. Definitely.

Q. Well, did you ever see a planer in which the tool chased the work? A. I don't believe I did.

Q. Did you ever see a shaper in which the tool— A. (Interrupting): Chased the work? They are all that way.

Q. No; I mean where both are moving in the same direction, one chasing the other? A. No, sir.

* * * * *

(1305) Q. (By Mr. Michael, continuing): Let's assume that Model T production stopped in May, 1927, when you started developing A—that would have started before that, wouldn't it? You certainly would have made up your minds to develop another car before you quit making one? A. Yes, I would say so.

Q. Have you any recollection on it, or knowledge on it? A. I know we were doing some Model A work right about the time we stopped the Model T.

Q. What kind of work? A. Developing a new engine: developing a new chassis.

Q. Did the engine come first, the motor; did you work on that first, or was that one of the first things? A. I believe it was. I believe it was.

Q. And that is the element in which these Model A cam shafts we have been talking about here were to be used at? A. Yes, sir.

Q. Well, did you know, or did anyone tell you at that time that there was a suit pending against the supplier of the Walcott machine? A. No, sir.

Q. Based on an infringement of the Gordon patent? A. No, sir; I didn't know that.

Q. You didn't know that? A. No, sir.

Q. And no one in the Ford organization told you? **(1306)** A. No, sir, no one told me.

Q. Well, were you ever informed on anything by the Ford Motor Company that anything you are working on involved a patent question? A. Yes, sir.

Q. Who tells you that? A. Well, all depends who has that information. That would be our patent attorney. It might be our superintendent. It might be Mr. Weibel.

Q. Do you consult your patent attorney or Mr. Weibel? A. Only when they come to me.

Q. Only when they come to you? A. Yes, sir.

Q. And I think this morning you said you had only been informed there was a question on two different items that you have handled? A. What were they?

Mr. Farley: I believe I might correct that, if you don't mind, Mr. Michael. That was a statement as to questions of changing only of where a purchase of machinery had been held up because of the fact that questions of patent infringement came up.

A. Oh, yes, yes. I only stated I knew about those cases, but I never had anything to do about it, or with it.

Q. (By Mr. Michael): Well, are there any other cases in which Mr. Weibel or the patent attorney had been called in to consider designing that you had been doing? A. It might be, but if it necessitated suit against the Ford **(1307)** Motor Company, where eventually we would have to get rid of the thing we are talking about, they would consult me about it, I believe.

Q. Well, as far as you know, would that be the only instance? A. Yes, as far as I know.

Q. It wouldn't be a question of any patent that might cover, owned by someone else, and— A. (Interrupting): If we were designing it?

Q. If you were designing it, yes? A. Oh, yes, they would let me know about that, certainly.

Q. Let you know about that? A. About what we are talking about.

Q. Let me make this clear. Let us assume you are working on a machine, or want to use a certain machine. A. We have been assuming that right along.

Q. Or want to continue to use a certain machine; there is a patent on the machine held by some third party who claims that your supplier of that machine is infringing? A. Yes.

Q. Would you know about that, or would that come to your attention in the ordinary course of business? A. It might.

Q. And what would you do about it? A. After they called my attention to it?

Q. Well, yes. A. I would start work on it.

Q. You would try to avoid the infringing— A. (Interrupting): I would try to avoid the infringing part (1308) of the machine, yes.

Q. You would try to avoid the infringing part of the machine? A. Yes.

Q. And if you couldn't avoid it, what would you do? A. I guess I would have to give up if I couldn't. It would be the only thing left.

Well, I am assuming that nothing could be done—he said if there is nothing else could be done, and we were stuck, then we would just be stuck.

Q. Now, on the changes that you propose to make in the A shaft, or said you might have considered in 1924, if you wanted to build a shaper, your first proposal, as I understand it, was to increase the diameter of two bearings, and reduce their longitudinal extent? A. Yes, sir, that is right.

Q. And your second one was to put on a second bearing, or cut one off and put on a pressed bearing later? A. Correct.

Q. But that would still entail reducing the longitudinal extent of the center bearing and increasing the diameter? A. Correct.

Q. And, then, in either of those events, you would have to shorten up or make some change in the tool holders, would you not? A. I think we—oh, one tenth of an inch.

Q. Well, I think the sketch you made of that, you showed the end of the tool holder as perfectly square across the bottom? A. Yes.

(1309) Q. When, as a matter of fact, they had a pitch to them, didn't they? Didn't the tool holder, as used in the shaper, have a pitch forward? A. Yes, sir, that is to take care of the proper cutting angle.

Q. I am not speaking of the tool now. I am speaking of the tool holder. A. It had a pitch.

Q. Yes. The under edge on it was pitched forward, wasn't it? I think it is shown that way in the drawing.

Mr. Farley: Suppose you look at the drawing.

Q. You also have it in your wooden model. A. (Referring to drawings.) No, these are not the ones.

Mr. Michael: What exhibit is this?

Mr. Spohn: 254.

Q. (By Mr. Michael, continuing): And, in this exhibit, 254,— A. (Interrupting): Yes.

Q. (Continuing): —aren't the tool holders all pitched forwardly? A. Yes, sir, in the cam shapers, yes, sir.

Q. And the tools all slant forward? A. Yes, sir.

Q. Now, how would you have to change that if your bearing was increased? A. You wouldn't have to change it.

Q. You would leave— A. You would leave it at the same shape. You would bring this line up one-tenth of an inch—this line right here (indicating). That tool holder could be brought up there one-tenth of an inch.

(1310) The Master: Leave this discussion off the record.

(Discussion off the record.)

Mr. Farley: Suppose you mark that, Mr. Pioch, on the Exhibit 254.

The Master: 254, yes.

(The witness does as instructed by counsel.)

(Discussion off the record.)

Q. (By Mr. Michael): Well, now, with that change you have just sketched there, your clearance would still be rather critical, would it not, between the bearing and the actual cam? A. Well, I would have to lay that out to scale.

Q. Well, you said one-tenth of an inch? A. Yes, sir.

Q. And you did that after some figuring? A. Yes, sir.

Q. Well, assume you gave it one-tenth of an inch, you still have quite a critical relationship there between the bearing and the actual cam? A. No, I don't believe so.

Q. For loading and unloading purposes? A. No, sir.

Q. Wouldn't be any likelihood of that? A. I don't think so.

Mr. Michael: That is all I have.

Re-Direct Examination by Mr. Farley.

Q. Just two more questions, I think. On the proposition that you first discussed about the Model A shaft and the changes of **(1311)** the bearings where you made your computation upon Exhibit 266, if you had merely changed the length of the bearings and probably increased the diameters, would you state whether or not that would have added any cost or any extra operations? A. It would not.

* * * * *

The Master: You recognize that there is more of a strain on the tool in the Westinghouse machine than in the Walcott, or do you?

A. Yes, there is.

The Master: But, you think that the—

A. (Interrupting): The advantages gained by the tool following like on the Walcotts, I believe the advantages are lost, because from the tests we made have shown that.

Q. (By Mr. Farley): In other words, the effort to keep the **(1312)** tool constant to the work in the Walcott machine which is accomplished by all of the oscillating cams, oscillating tools, springs and other things, is a penalty

which you have to pay that isn't worth the price of keeping the tool constant? A. That is correct.

Q. Over Westinghouse? A. That is correct.

Mr. Farley: I think that is all.

* * * * *

(1315) NIELS BOESEN was thereupon called as a witness on behalf of the Defendant herein, and having been first duly sworn, testified as follows:

DIRECT EXAMINATION by Mr. Farley.

Q. Your full name, please? A. Niels Boesen.

Q. Where do you live, Mr. Boesen? Where do you live? A. On 12720 Tuller Avenue.

Q. And you are employed by the Ford Motor Company? A. Yes.

Q. What position at the Ford Company? Your job at the Ford Company? A. Well, I take care of designing special machines. I got a gang that does that only.

Q. And you work in Mr. Pioch's department? A. Yes, under Mr. Pioch.

Q. Now, did Mr. Pioch give you any particular instructions concerning the making of some drawings relating to the Ford cam shaft shaper? A. Yes, sir.

Q. I show you Exhibits 254 and 255 and ask you if you are familiar with these drawings? A. Yes, I am.

Q. And will you just state what work you did in connection with the particular drawings? A. Well, Mr. Pioch brought these prints down to my division and told me that that was a machine that had been used for the **(1316)** old machine cam shaft, and he told me we could find a way whereby we could change that machine over to use on a Model A. As to now, we couldn't use the Model A because there isn't room for two tools there. So, he asked me to devise, or help to devise, a way whereby we could change that machine over so that we could use it on the Model A.

Q. Yes, go ahead. A. And we studied, of course, and talked about it and came to the idea of which we made a model, which is over there (indicating).

The Master: I don't know if it is of any importance, but you weren't familiar with the machine itself until Mr. Pioch brought it to your attention?

A. No. I have never seen prints before now.

Q. (By Mr. Farley): Now, were you able, when Mr. Pioch brought the particular prints to you, to tell from an examination of the prints the way in which the old machine worked? A. No, not right away. It was a conclusion of ours—

The Master (Interposing): Pardon me, Mr. Boesen, I think if you are careful not to rattle these papers, the stenographer can probably understand you better.

Mr. Michael: What was the last answer, please? I didn't get that.

The Master: Read the question also, Mr. Reporter.

(The question and answer were then read by the reporter.)

Q. (By Mr. Farley): After you had inspected these blue-prints— A. (Interrupting): Yes.

Q. (Continuing): —for a couple of hours— (1317) A. Yes.

Q. Did you then understand the manner in which the machines shown in the drawings worked? A. Most of that.

Q. The old machine? A. Yes; the main movements, I could see that.

Q. Now, then, what next did you do? A. Well, we came to the conclusion that we could take those two cams by the method that we have shown over there on that model.

Q. "That we could cut those two cams," did you say? A. Yes, by that method we showed on that model we got over there.

Q. Now, then, what did you do? A. Well, we made a layout of which you have a print, and from that we built a model.

Q. Now, I call your attention to certain crayon lines on these two exhibits. A. Yes.

Q. 254 and 255? A. Yes.

Q. Were those crayon lines on those prints when they were first brought to you by Mr. Pioch? A. No.

Q. And who put these additional crayon lines on these prints? A. The designer, who took care of it, and myself, Mr. Pioch figured out how they were going to do it. He put the lines down.

Q. That is, one of the men who is working under you? **(1318)** A. Yes.

Q. In Mr. Pioch's department? A. Yes.

Q. And when you referred to the layout of which I have a blueprint, you were referring to the sheets of drawings, 257, 258, and 259, is that correct? A. According to this one here (indicating).

Q. And that is Exhibit No. 257? A. Yes.

Q. And who made this particular drawing? A. That same man.

Q. What was his name? A. Wayne Houtary. He is one of my men.

The Master: How do you spell that?

A. H-o-u-t-a-r-y.

Q. And how about the drawing, Exhibit No. 258? A. The same.

Q. The same with respect to that? A. Yes.

Q. Made by Mr. Houtary? A. Yes.

Q. And the same with respect to drawing No. 259? A. The same thing.

Q. Made by Mr. Houtary? A. Yes, sir.

Q. Now, let me ask you, Mr. Boesen, in making these drawings, and assigning this job to your assistant, Mr. Houtary, did you depart in any way from your regular procedure there around **(1319)** the Ford plant? A. No. That is the way we do it.

Q. Are you familiar with the standard shaper drive? A. Yes.

Q. Will you state whether or not, or, let me ask you —how long have you had personal knowledge, yourself, of the type of machine tool known as the shaper? A. Oh, I would say—oh, I would say 45 years.

Q. And, now, will you state whether or not the drive for reciprocating the work carriage as shown originally in the drawings, 254 and 255, is or is not the same as the

standard shaper drive that you have known about for 45 years? A. Yes, that is the same thing.

Q. Will you state just what you did with respect to the two tools that you referred to as not being able to cut the cams on account of interference with the bearings on the Model A shaft? What did you do with respect to those two tools? A. We mounted them on a slide that is 90 degrees away from the other slides. You see, the other two slides came this way (indicating).

Q. The other came down vertically? A. Yes. And this one we attempted to make is horizontal.

Q. Yes; and at 90 degrees? A. And operated on the same shaft as the one that operates the cam shaft for cutting the other cams. We drew that right in the same shaft by making that crank so much larger that the slide has a chance to not only catch up, but to do its work and finishing at the same time the motion of the cam **(1320)** shaft ends. In other words, all the tools on the top, as well as the tools on the slide to end at the same time.

The Master: Will you just read what you have, Mr. Reporter?

Mr. Farley: Yes, I was going to suggest that.

(The answer was then read by the reporter.)

The Master: That is all right.

A. This should have been longer (indicating).

The Master: All right.

Q. (By Mr. Farley, continuing): Now, as I understand it, the machine, in your testimony, in so far as the mechanism for driving the slide which carried the two tools that are horizontally arranged are concerned— A. (Interrupting): Yes.

Q. (Continuing): —you hooked the driving mechanism for that right to the same driving mechanism? A. Exactly.

Q. And that mechanism— A. (Interrupting): Yes.

Q. (Continuing): —which you hooked that to was the old shaper drive? A. Extension of the shaft, of course, had to be done.

Q. And the same sort of a driving mechanism that has been used, to your knowledge, for 45 years? A. Yes.

Q. In the shaper? A. Yes, sir.

Q. Now, will you state, in so far as your slide is concerned with the two horizontally arranged tools; would you call that **(1321)** a shaper-cutting action? A. Yes.

Q. You understand? A. Yes.

Q. And that shaper-cutting action is one in which you have the tools, the shaper tool mounted? A. Yes.

Q. On a reciprocating ram? A. Yes.

Q. And as the ram which carries the tools? A. (Interrupting): The work is standing still.

Q. Beg your pardon? A. The work is standing still.

Q. The work is standing still? A. Yes.

Q. And the cutting action is performed by driving this ram? A. Yes.

Q. And making the tool traverse across the work? A. Yes.

Q. Now, is that principle and that same driving mechanism employed in this slide with the two horizontal tools that you laid out? A. Yes; yes, that is the same.

Q. Do you know about how long it took this man and yourself to prepare these particular drawings? A. You mean just what we made here (indicating)?

Q. Yes. A. Oh, I would say two—three days—three days, I think, probably, it took him about three days.

(1322) Q. I don't see any particular date on these drawings? A. No. We forgot to put that on.

Q. Do you remember when it was these drawings were made? A. Oh, it is about half a year ago; something like that. I don't exactly remember. I think that is what it is.

Q. Now, in connection with this general proposition of using the shaper, such as shown in the drawings 254 and 255— A. (Interrupting): Yes.

Q. (Continuing): —for the machining of a Model A cam shaft, did you consider any other type of modification of that machine, other than what you have put on these drawings? A. I think there was a couple of other ideas, but I have forgot now what they were. However, this was the one that we talked about that we thought would be the one we would employ.

Q. Yes. Was this particular modification considered, if you know, or, if you recall, from the standpoint of employing the old Model T shapers such as shown in these

prints to the fullest extent, or, was it considered from the standpoint of what you would do if you had started to re-design the machine entirely? A. Well, if I had to start to re-design the machine entirely for that same cam shaft, I would have made it a little bit different. I would make it in such a way that it would be, still be tool slides; one that would hold the stationary tool; one that would slide the cam shaft, and that slide that we have, I would put, I would put them opposite each other, 90 degrees—you know, this way (indicating), and that. I would make them so the tools would cut opposite.

The Master: You would make them all horizontally?

(1323) A. What?

The Master: You would make them all horizontally?

A. Yes; and they would counteract each other.

The Master: You have two on one side and six on the other?

A. No. I think I would take—let's see—four on each side.

The Master: Yes.

Q. (By Mr. Farley): Would the making of the drawings such as you have made, and which you have before you for the re-design you are just talking about, present any different or more difficult problem than you are confronted with there in your regular daily work there, Mr. Boesen? A. No, not a bit. I could see we could make that.

Q. About how many special machines have you made designs for in your experience as a machine designer? A. Oh, gee, that's—that's hard for me to say.

Q. It would be hard for you to say? A. Yes. I never kept track of them, but it is a good many.

Q. Would it be a matter of— A. (Interrupting): Several hundred, I would say.

Q. How long have you been doing that particular type of work at the Ford Company? A. Since I came to the Ford—that was—I think it was '21, or—'21, yes.

Q. And were you doing work of that type in any other plant? A. Yes.

Q. Before you worked at Ford? A. Yes.

Q. Had you designed special machinery in other plants? **(1324)** A. Sure.

Q. Where, for example? A. Lincoln.

Q. And Lincoln Motors? A. Before it was bought by Ford.

Q. And how long were you with the Lincoln? A. As long as it lasted.

Q. How many years? A. Was it three years? I guess. Yes.

Q. Well, that would be, that would have been from about 1917 to 1920, or thereabouts, is that about right? A. I came to Lincoln right after the War.

Q. That would be between 1918 and 1921? A. Yes, and I was there—

Q. (Interposing): And before that you were with Northway, did you say? A. Oh, I was with several other concerns.

Q. In this country? A. Right here in Detroit. I was once with the Brush. In fact, that was started in 1909 here in Detroit.

Q. Was Mr. Alanson P. Brush, who is now in the courtroom, in charge of the company at that time? A. I don't recall. We started to make tools for the Briscoe at that time.

Q. Now, was it in 1909 that you first started in the design of machine tools for the automobile industry? A. Yes.

Q. So then for the last 30 years— **(1325)** A. (Interrupting): Yes, sir.

Q. (Continuing): You have been in that work? A. Yes, sir.

Q. And has your work been mostly that of designing special shop machines? A. Yes, sir. Tools; also work.

Q. Tools? A. Yes.

Q. Will you state whether or not the work in that connection at the Ford Company differs from the experience you have had in other companies? Is it the same? A. It has not—it is the same.

Q. It is the same? A. It is the same, yes.

Q. Had you done any—had any experience in the design of special machinery in other industries outside of the

automotive industry before you got started in the automotive industry? A. No.

Q. That was your first machine tool designing work? A. Yes.

Q. Now, in addition to these drawings which we have just been discussing, you prepared some other drawings showing a different expedient or different way of having the cam shaft, or using the cam shaft for shaping Model A cam shaper, did you not? A. Yes. Just a little sketch would show another way of—

Q. (Interposing): Yes.

Mr. Farley: I produce two more drawings and ask that they be marked Exhibits 268 and 269.

(1326) (Exhibits 268 and 269 were then marked by the reporter.)

Mr. Farley: Now, I might state at this point, if the Court please, that Mr. Oberhoffen, the original designer of the Model T cam shaper, was interviewed by me and he outlined a scheme that he not only stated he had in mind back in the days when he was at the Ford Company, but, when I asked him the question, "Could your machine be used for the Model A?" he said it could.

I asked him if he could make a sketch outlining briefly the simple scheme that he would—that he did have in mind.

Oberhoffen has recently been very ill, and his hands are very shaky. I can show you some correspondence that I have had with him, which I will produce after a while, or at some later date, if necessary. And, he requested me to have those drawings prepared, explaining to myself, and also to Mr. Brush, who was present at the time, just what conception he had, and we had Mr. Boesen make these drawings from the ideas which Mr. Oberhoffen had passed on to us.

The Master: Well, is he going to testify here?

Mr. Farley: Beg your pardon?

The Master: Well, is he going to testify here?

Mr. Farley: Yes, he is going to testify if the good Lord spares him.

I might state also in that connection, that I had hoped that we could have Mr. Oberhoffen here by the

end of this week. I communicated with him, however, and learned that he had had an operation within the last week or ten days and that his doctor advised him that it would not be very advisable for him **(1327)** to travel. And, I am afraid that we will have to take Mr. Oberhoffen's deposition at Rockford, Illinois. He is at Rockford, Illinois, and he is now working for the Ingersoll Milling Machine Company.

The purpose of having Mr. Boesen testify concerning these is because these drawings were actually made at the Ford Company under his supervision, to put down in graphic form the ideas about this matter which we will have Mr. Oberhoffen testify to later.

Mr. Spohn: Then, it may be understood that the testimony of the witness concerning these drawings, we reserve our rights with respect to it, until we hear from the gentleman?

The Master: Yes. I won't make any ruling on it until that time.

Mr. Farley: Yes.

The Master: Go ahead.

Mr. Farley: Yes. I thought that would avoid a lot of argument, that statement of mine about admissibility.

The Master: Yes.

Q. (By Mr. Farley): Now, Mr. Boesen, I show you the drawing, Exhibit 268, and will you please tell the Court what that is? A. No.

Q. Did you get the question? A. No.

The Master: Read it back.

Mr. Farley: Yes, read it, please.

(The question was then read by the reporter.)

A. Another idea of shaping the cams and the shaft.

(1328) Q. On what type of a shaft? A. On—let me see—this is the Model A.

Q. Now, just a minute, Mr. Boesen. A. Yes.

Q. This particular sketch that you have before you, I notice, shows a rather large shaft? A. Yes.

Q. That is not intended to represent any particular cam shaft, is it? A. Well, yes. That is a truck shaft.

The Master: A what shaft?

A. A truck shaft.

Q. (By Mr. Farley): A truck shaft, or a tractor? A. No—truck.

Q. What? A. No. Tractor—I think it is a tractor cam shaft.

Q. You think it is a tractor cam shaft? A. Yes.

The Master: Is that made to scale?

A. Yes, it is a scale—it is a tractor. I think it probably says here (referring to drawing)—no. It is a tractor cam shaft; it being built the same. No chance of getting the two started here or here (indicating).

Q. Now, when you say "here and here," you are pointing to the large end bearing? A. Yes.

Q. At the left-hand side? A. Yes.

(1329) Q. And to the space adjacent to the center bearing? A. Yes.

Q. At the right-hand side? A. Yes.

Q. Very well, now. Will you go ahead? A. Now, the working of this is so, that when we go this way (indicating)—

Q. (Interposing): Toward the left? A. Yes, to the left. And cuts this cam. Now, when this goes back, this changes (indicating respectively); so this tool (indicating) comes this way, alternating, according to which way you go, so that you cut both ways.

The Master: You have four tools cutting on one stroke?

A. Yes.

The Master: And the other four cutting on the other, is that the idea?

A. Yes.

Q. (By Mr. Farley): Now, insofar as that construction is concerned, the purpose of this drawing, 268, shows that you have four tools cutting, as you just said, in one direction, or one-half of a stroke? A. Yes.

Q. And the other four cutting the other half? A. Yes.

Q. So that in effect, this is a shaper, which, instead of cutting like the old Model T cam shaft shaper on one stroke, with a quick return, you are now shown a machine

which would cut both on what we call, we would call, the cutting stroke and the (1330) returning stroke of the old shaper? A. Yes.

Q. Is that correct? A. Yes.

Q. Now, insofar as that is concerned, did you in any way show in your drawings any modification of the driving means so as to affect the speed of travel? A. Yes, that would have to be different, because in the machine as it is now, it goes back much faster than it cuts. That would have to be made so that the speed of travel would be equal in both ways.

Q. I notice you have on the drawing this inscription—layout showing tools to cut in both directions, speeds being equal? A. Equal, yes.

Q. Now, will you state whether or not the designing of that type of a machine would present any greater problem than those with which you are regularly confronted with? A. Well, I think it would. I think it would require more mechanism.

Q. More mechanism than as shown in the drawings, 254 and 255? A. Yes.

Q. Or more mechanism than you have to employ in other machines which you design? A. No. What I mean is, more mechanism than what is in these—what there was in the old Model T shaper.

Q. Yes. Well, now, would the designing of the mechanism to effect the movements present any problem that would be beyond your ability as a designer? (1331) A. Well, if it can be made, we can make it. There is nothing to stop us.

Q. Well, now, in view of that last answer, will you state whether or not, in your opinion, this could be made? A. Yes, it would.

Q. And will you anticipate any great difficulties as to whether or not it would operate if it were made? A. Yes, I think it would.

Q. You think it would operate? A. Yes.

Q. Now, in connection with this drawing, 268, you also prepared a drawing, 269. Now, will you explain that? A. Well, this is part of this.

Q. "This," you mean 269? A. Yes.

Q. (Continuing): Is a part of 268? A. Yes.

Q. Now, just what is the job of the parts as shown in drawing 269? A. Well, this was merely to show a way of getting the tool back on the return of the shaft.

Q. Now, can you describe just what that particular mechanism is as shown in drawing 269? A. Yes. With this here turning (indicating)—

Q. (Interposing): Now, wait a minute. A. And this (indicating)—

Q. (Interposing): Now, wait a minute.

Mr. Farley: This will be off the record.

(There was a discussion off the record.)

(1332) A. Yes, this cam turning (indicating)—

The Master: Well, supposing we mark this with a "C," then, making a line here (indicating)?

Mr. Farley: Yes.

Q. (By Mr. Farley): Now, with the cam "C" turning, and the plunger "P"—put a "P" on the plunger. A. (The witness does as instructed by counsel.) Plunger is pulled out of its seat here (indicating), allowing this to go back (indicating)—

Q. (Interposing): Allowing which to go back? A. Allowing this tool to go back.

Q. All right. Now, let me start—"T" represents the tool, is that right? A. Yes.

Q. And "H" is the tool holder, is that right? A. Yes.

Q. Now, are those parts similar to the parts shown in the drawings, 254, 255? Are they the same type, generally, tool holders, as we have in this drawing? A. No. They would have to be a little different.

Q. All right. Now, explain the differences in the tool holder "H"? A. Yes.

Q. You have shown a slide or groove, which I will mark "G." A. Yes.

Q. Is that right? A. Yes. Now, let me see—if they—they could really—they could be the same. You see, you have a spring here (indicating) to hold the tool holder against the cam, the same as you have **(1333)** here (indicating). The difference in this is that over here (indicating)—let's see—we have a release of the cam, so that this (indicating) can be pushed up.

Q. Now, you stated that the tool holders here—you are referring to Exhibit 269—could be the same as the tool holder shown in Exhibit 254? A. Yes.

Q. And you stated that the cam has a release on it? A. Yes.

Q. You referred to the master cam to which I will put the letter "M"? A. Yes.

Q. Is that correct? A. Yes.

Q. Now, the master cam, "M," is similar to the master cams, "MM" shown in drawing, Exhibit 254, is that correct? A. No. No.

Q. Well, I mean except for difference in the contour of the work piece?

The Master: Let him explain what he means.

Mr. Farley: I see. All right.

A. This is really not worked out correctly. It is merely a sketch here to show how we would put the end of this, pull it back. That would be some other design in here (indicating). We didn't go to the trouble of putting that in. We just showed this here (indicating), that would put it back on the main, from the cam shaft, down here (indicating).

Q. I called your attention once before to a part, which, I said, (1334) was a groove, "G"? A. Yes.

Q. The tool holder would have a slide, or a groove-way extending horizontally toward the top part of it? A. Yes.

Q. As shown in your drawing? A. Yes.

Q. Is that correct? A. Yes.

Q. And, in that groove there is a plunger? A. Yes.

Q. "P," is that right? A. Yes.

Q. And that plunger is moved in and out of the groove under the influence of the cam, "C"? A. Yes.

Q. And now, the plunger has at its upper forward end, a wedge, or incline face, "W," is that right? A. Yes, it has.

Q. Now, then, as the master cam "M" rotates and comes to the flat portion of the cam, what would be the function of the parts? How would that work? You understand? A. Yes. This—the function of this (indicating)—

Q. (Interposing): That is "P"? A. Yes, "P" is to pull the tool back on the return stroke of this (indicating).

Q. Now, just how will that operate? A. This is not a finished design here. The sketch is only to show **(1335)** in what way the tool could be put back on the return stroke.

Q. Well, now, in the cam "C," I notice you have got one portion, which is a throw of the cam? A. Yes.

Q. And the throw is now shown in contact with a rod "R," which operates "P"? A. Yes.

Q. Now, when the cam "C," comes around to the lower part of its surface? A. Yes.

Q. What then would happen? A. It is pushed down.

Q. "P" would be pushed towards the right? A. Pushed down, yes.

Q. Under the influence of the spring? A. Yes.

Q. (Continuing): "S," is that the idea? A. Yes.

Q. And, then, what would happen? A. And this (indicating) would push over to the contour of this cam (indicating)—come over and do the work.

Q. What effect would that have on the tool holder? A. Well, the whole tool holder would be pushed over.

Q. The whole tool holder would be pushed over? A. Yes.

Q. What do you mean?

The Master: Well, if the plunger, "P" is pushed over this way (indicating), how would the tool holder be pushed over **(1336)** here (indicating)?

A. Right from here (indicating).

Q. (By Mr. Farley): Well, if you pushed the plunger "P" over to the right, would the tool holder stay in this position (indicating)? A. No.

Q. Or, would it move up, or would it move down? A. No. It would move over to touch the cam.

Q. It would move up? A. Yes.

Q. And what would cause it to move up? A. The spring here (indicating).

Q. The spring? A. Would push it over to the outline of the cam.

Q. Let's see, we will call that the spring, "Q"? A. Yes.

Q. And the mechanism shown by the cam, "C," is for the purpose of raising the tool, as I understand it? A. Yes.

Q. (Continuing): On the return stroke? A. Yes.

Q. And push the tool again down, in relation to the work on the cutting stroke, is that correct? A. No. No. No, it isn't. The idea of this is to push the tool over for the return stroke and letting the outline of that cam push the tool over. You see, this line would come over here (indicating), and, wherever outline is against that, could be pushed over to the contour of the cam.

Q. Now, when you say, "over," you really mean up and down, don't **(1337)** you? A. Well, all depends—if you mean horizontal—it couldn't be on the old machine.

Q. Yes, I see. A. That would be a whole new machine.

Q. And by "over," of course, the parts are shown vertically in the drawing? A. Oh, yes, yes. That would be the same thing.

Q. So, your "over" means up and down on the drawing? A. Yes.

Q. Is that the idea? A. Yes.

The Master: On the Model T shaper there was a device, was there not, for raising the tool holders as the shaper performed its return stroke?

A. Yes.

The Master: Is that a similar mechanism to what you have here?

A. No.

The Master: How is that?

Mr. Michael: The whole head raised.

The Master: Oh, the whole head raised.

A. Yes, the whole head raised for loading and unloading, and just a little bit forward it turns up, yes, and, there is a cam in here (indicating), running between those two rollers, and makes those two rollers go up and down.

Q. (By Mr. Farley): You are referring now to Exhibit 255? A. Yes. Now, those rollers are on a level with a fulcrum here **(1338)** (indicating). Now, as this cam runs around there and pushes this (indicating) up and down in there—but there, you get the mechanism to release the tool when the cam shaft goes back.

Q. Well, now, you are referring to rollers on Exhibit 255, and I will mark them "R." A. Yes.

Q. And can you mark the shaft or cam that operated those rollers—will you mark that, "C," in the Exhibit 255? A. Yes. "C"?

Q. Yes. A. (The witness does as instructed by counsel.)

Q. Now, would the cam, "C," in the drawing, 269, where would that be located with respect to the cam you have marked "C" in 255? A. You mean where this cam would be over here (indicating)?

Q. Yes. A. That would be this way (indicating) here.

Q. The cam "C," in 269, would be on the same shaft as the cam "C" in 254, is that correct? A. Yes. Yes.

Q. Now, with respect to the master cam, "M," in your drawing 269, that is to perform the function of governing the tool so as to get the contour of the work? A. Yes.

Q. Is that correct? A. Yes.

Q. Now, in that respect, would that cam differ from the cams, "M"? A. Oh, yes.

Q. I don't mean as far as the shape is concerned. I am talking **(1339)** about the function of regulating the tool so as to produce the contour. In this drawing 254, the cams "M" perform the function of raising and lowering the tools to produce the required contour? A. Yes.

Q. Is that true outline—this would have, only have it half the speed of that, because on this, we would have to have outline contour on this, as well as the space where this could act. A. Yes.

Q. But, as far as the function of performing the contour is concerned? A. We get that from the cam.

Q. You get that from the cam? A. Yes; master cam outline.

Q. Except that in this scheme such as you show in Exhibit 269— A. (Interrupting): Yes.

Q. (Continuing): —you would have to have an additional contour? A. Yes.

Q. (Continuing): To permit the raising them up? A. Yes.

Q. (Continuing): To get the cam, "C," to work? A. Yes, sir.

Mr. Farley: I think that is all.

Mr. Spohn: Did you offer those two last exhibits, Mr. Farley?

Mr. Farley: Oh, yes, yes.

I am offering now, Exhibits 269 and 268, and, in that respect, and, anticipating the objection, I might say it is **(1340)** quite agreeable with me if the Court withholds its ruling subject to the testimony being offered by Mr. Oberhoffen.

Mr. Michael: Well, may I ask, if counsel is offering these exhibits for setting up another standard of comparison?

Mr. Farley: No, we still have the same old standard of comparison.

Mr. Michael: What is the purpose of this?

Mr. Farley: To show the great ease with which any machine designer could avail himself of that to make Model A shafts.

Mr. Michael: But I thought the witness said it would take an entirely new machine to embody these features.

Mr. Farley: Just what did you mean by that, Mr. Boesen, that in making an entirely new machine you would make a machine which operated on a different principle, or on the same shaper principle as used in the old machines?

The Witness: Same shaper principle; the mechanism would be a little different—shaper principle.

Mr. Spohn: Well, do I understand, then, counsel, you state that this standard of comparison is set up in the account as filed here?

Mr. Farley: Yes, certainly, every bit of it.

Mr. Spohn: And the profits and advantages and gains have been computed along this comparison?

Mr. Farley: On shafts not restricted to this one, any more than restricted to the exact shape of the Model T cams or outline or periphery.

Mr. Spohn: Well, let me ask this, counsel: Do the costs there set up for the production of the Model T cam shaft in the account have reference to this standard for which these blue **(1341)** prints, Exhibits 268 and 269, have just been offered?

Mr. Farley: No. I would say no as to that. I would show after we form the basis for this—by the testimony of Mr. Oberhoffen, we will establish, in view of the speeds in the original machine that, using this type of machine, the modified machine as shown in these particular prints, we could have machined the shafts very much more rapidly as Mr. Pioch says in his testimony, by the use of the machine, using the shaper principle.

Mr. Spohn: Your Honor please, we haven't heard the testimony of the witness who is ill, and, in spite of that, I want to move the testimony of that other witness relating to the fact, to a machine not in existence at all, the whole matter is incompetent, irrelevant and immaterial and not a proper standard of comparison. It applies to both of the exhibits, if your Honor please.

Mr. Farley: Yes. I have been restraining myself with all of Mr. Spohn's objections concerning the standard objections of incompetence, irrelevance and immateriality. I am forced to admit that I am quite in agreement with him in view of the facts of this case, that all testimony concerning standards of comparison and numbers of cam shafts, will prove to be, in the end, entirely incompetent, irrelevant and immaterial.

I think I will show in argument later on, when we present it all to the Court, that it really has no part in the whole case, but, nevertheless, we are making our proofs concerning them.

It is a lot like a case I had before Mr. Sayres, if your **(1342)** Honor please, in which counsel for the plaintiffs, working on the basis of hoping to get a percentage, had endeavored to establish a cost of a dock, which was probably five or six times above the actual cost, and they did that by including everything that was in any way attached to the dock—railroad tracks, and all that sort of thing—and, along in my part of the case, the defendant, when I attempted to introduce testimony concerning the cost of railroad tracks, the objection was made by opposing counsel that it was incompetent, irrelevant and immaterial.

I agreed with the objection at the time. And I think that my argument here probably goes to the same general purpose.

Mr. Spohn: So, do I understand, then, that counsel agrees then that the exhibits are not competent, relevant and material?

Mr. Farley: Oh, no.

Mr. Spohn: I don't understand you.

Mr. Farley: I think it is quite material.

Mr. Spohn: I don't understand counsel's remarks. I thought he was agreeing with me. Maybe I misunderstood him.

Mr. Farley: I just want to call your attention to the fact as to how immaterial your case is.

The Master: Well, frankly, I don't understand your argument either, Mr. Farley.

Do you mean that all the testimony as to standards of comparison, that for some reason that you haven't yet argued or disclosed, is not in point, and that profit should be determined on some other basis?

Mr. Farley: No, of course not; of course not.

(1343) Perhaps my argument was a little bit on the facetious side.

* * * * *

The Master: Mr. Farley, in the defendant's statement of account, has **(1344)** any consideration been given to the extra costs of construction of these modified machines, and the extra difficulty from maintenance and repairs due to the additional moving parts and the extra operations which might be required, over the operations and costs in the original Model T cam shaper?

Mr. Farley: I think we have, your Honor.

I will say that matters of that type, that I have had sufficient mechanical training to appreciate and understand the manner in which the machines work, and, I don't think that that would seriously or materially affect the entire situation.

I can't conceive, knowing the type of construction that was in the Model T cam shaft shaper, that the addition of the extra slide which operates on the old well-known shaper construction, and many of which machines I personally have run, that we could, by any

means, get a condition of attempting to have or to keep those machines in operation, where anything like the number of maintenance and repair men could be required, as was actually required in the Ford plant to keep the Walcott machines in operation. And I will say that as far as this particular one we have just been talking about is concerned, we did not base any of our computations which we filed in answer to your orders heretofore on this particular type of a machine. If we use that, I think we would show figures very much more—decidedly more favorable to the defendant.

Does that answer your question?

Mr. Spohn: Do I understand counsel now to say that Exhibits 268 and 269 were not referred to, covered by the account?

(1345) Mr. Farley: They were not referred to by our statement of account. We were asked, at the request of the Master, or rather, the order issued by the Master at the plaintiff's request, to prepare a statement in debit-and-credit form, showing the profits, gains and advantages.

We were also asked to show and describe what standards of comparison, if any, we had used in the preparation and computation of that account.

Now, I can't conceive of how it could be possible that if we used certain standards there, we are precluded from still presenting other standards for the basis for which it was necessary to produce testimony to establish that such standards could or should be permitted as having been available.

I mean, if your Honor had said, "State all of the possible standards of comparison that the defendant might have used," then I could see that there might be some substance to Mr. Spohn's repeated objection as being a departure from the pleading, the state of the pleadings as they are. I can't see the pertinency of the objection myself.

The Master: We are getting into quite an extensive inquiry here as to the various ways which the cam shaft shaper might have been re-designed to perform the operation of rough-machining the Model A

cam shaft, and, not only going into the question of how it might have been so re-designed, but finding ways of re-designing it, so that it would have been a better machine than any machine that was ever designed by any company, or for any purpose in this field.

I am just wondering the extent to which we can go in a lawsuit **(1346)** in that direction. There must be some limitation to such an inquiry.

Do you consider that your statement of account which you submitted was primarily based on the re-designed cam shaper embodied in the wooden exhibit, which you have here, and that these other ways of re-designing a cam shaper, are simply to show that there were many other ways in which the cam shaper could have been re-designed, but which you did not definitely consider in your statement of account?

Mr. Farley: No. As to that, your Honor, I would say that in preparing that statement of account, and having the computations made, I considered first, the use of the old Model T cam shaft shapers with only the change of the master cams, with the slight modification of the cam shaft, which was well within the ability of the Ford Company designers, and was just as available to them as anything could possibly be, insofar as availability of machines are concerned; machines known and available to the defendant.

That is one.

Two: The slight modification, or the modification, whether it was slight or not—of the cam shaper, in the event that had the physical structures of the old Model T shapers still been in existence, the making of an attachment such as shown in the wooden model; paragraph three: If the Ford Company had had before it the necessity to—in 1927—which it did not have—to scrap the Walcott machines, and make a new machine, designing the new machine around the shaft in exactly the same way, and meeting exactly the same situation as they met when **(1347)** the change was made from the Model A to the V-8 with the Pioch machines; that then presents a number of expedients

clearly available to any competent designer, and any one of which might have been resorted to; one, the type described by Mr. Boesen and Mr. Pioch where the machines would be provided with two rams and the tools working in opposite directions, these four tools on each side, having very definitely considered also this particular modification, which I personally could say, presented no problem at all, or no great problem, which, I will say that with my limited experience in machine design, it was perfectly obvious to me, that, too, could be resorted to.

As far as the testimony of Mr. Oberhoffen is concerned on the subject, I consulted him at Rockford after we had filed our statement of account, and merely asked him the question, "Could you use the shapers on the Model A shafts?" He said, "Yes." "How could you do it?" He proceeded to outline his scheme, which I, too, had in mind, but, which I made no reference to him at the time, but which he personally had in mind. But that is one way he had in mind, had personally in mind when he was working at the Ford place. In fact, he had made lay-out drawings of this type of machine to increase the production of the Model T shapers. Before, however, that was ever completed—his layout—he was then transferred to another department.

So, I would say, then, that as to each and every one of them, they were taken into consideration and included in our consideration in our computation of our accounts.

Now, so far as this last one is concerned, if we had taken, **(1348)** based it on the speeds at which the original machines worked, we could readily have computed a very much greater rate of production, and a greater proportion of the—say—loss—by using the Walcott machines.

Now, as far as that is concerned, it is no more hypothetical than the hypothesis upon which plaintiff's entire statement of account is based. That, if you will remember, is based, first, upon the hypothesis that the Ford Company would be compelled to use the Landis grinders; and, then, with the further

hypothesis that some time study used in the White Company would have any application at all at the Ford place.

The Master: Well, I suppose, too, if you consult a hundred different mechanics and give them a good deal of time to think, they could think of all kinds of modifications which could be made in a design of almost any kind of a machine.

Mr. Farley: I would say, if the Court please, that if you would consult 100 different first-class mechanics and show them a Model T shaper, that you are quite correct, that each and every one of them might have a different suggestion, but, I don't think each and every one of them would require much time to think about it.

The Master: Of course, there is a practical question here as well as a legal question as to whether these modified exhibits are relevant at all, and that is the question of the extent to which the defendants should be permitted to put in cumulative evidence along this line. If you went into the question of, or completely analyzed the functions of each one of these suggestions of the ways of modifying the shapers to **(1349)** machine the Model A cam shaft, and, after considering the question of the mechanical practicability of the devices, then went on to the question of how the changes would affect the cost, and had direct testimony on the part of Ford Motor Company's witnesses, and, then, rebuttal testimony on the part of plaintiff's witnesses, and rebuttal testimony again, we will be in this proceeding almost endlessly here. I wonder how many more of these exhibits we are going to get into?

Mr. Farley: I think that is the limit, if your Honor please.

The Master: Is this the last one?

Mr. Farley: Yes.

Mr. Spohn: Is that the last one?

Mr. Farley: Yes, that is the last one.

Of course, we could get plenty more if we wanted to, but we won't, I assure you of that.

Mr. Michael: Well, your Honor, they could put in a car load of that. And, this last is just about the limit when they bring in a sketch of what somebody had in mind 15 years ago.

The Master: Well, I presume, then, again, there, that the assertion might be made that some of the hypothetical ideas which were thought of, looking back over the entire history of the different types of machines used, that would not have been thought by a man working at the Ford place, if he had a particular modification in mind, the time that this problem is presented that, then, that can't be charged to the product of a lot of experience which he has had subsequent to 1927 or 1928. So, there may be some point to that.

(1350) Mr. Michael: Well, I didn't understand that the man had it in his mind.

Mr. Farley: He had it long before that.

The Master: Yes.

Mr. Farley: He was considering it for the tractor camshaft, and he was moved out of the department.

Mr. Spohn: He was moved out of the department.

Mr. Farley: He was moved out of the department. He was promoted to personal designer of Mr. Ford for the period.

A Voice: This is off the record—can I speak?

The Master: Well, put it down, anyway.

A Voice: I was at Highland Park with Oberhoffen at the time he was transferred. That was when they started the tractor job. Now, what date that was, I don't know. But, I know Mr. Oberhoffen was put out there in charge of the designing, and we also transferred about six or eight draftsmen out of the department that was in Highland Park.

The Master: Well, if this evidence were simply being put in as cumulative evidence, and we are simply, or, it is simply a design or an idea thought up, I think we have already enough of those in evidence, and it wouldn't be necessary to have this one, except for the possible testimony of Mr. Oberhoffen on the point; consequently I will withhold ruling on it until the testimony of Mr. Oberhoffen is taken.

* * * * *

(1356) ALANSON P. BRUSH was thereupon called as a witness on behalf of the Defendant herein, and having been first duly sworn, testified as follows:

DIRECT EXAMINATION by Mr. Farley.

Q. You are a resident of Detroit, Mr. Brush? A. Yes.

Q. And, what is your occupation? A. Consulting engineer.

Q. Now, what experience, if any, have you had in connection with the automotive industry? A. I have been active in that industry since there was any to speak of. My first work in connection with the automotive industry was in the factory here in Detroit. They took a contract to build engines and transmissions for the Olds Company on their first production of automobiles. That was the first (1357) quantity production of automobiles in this country.

Mr. Michael: May I interrupt just a minute, just to raise this one question, as to whether or not Mr. Brush need give all the qualifications, and so forth, that he gave in the lower court.

Mr. Farley: I was just about to go into that myself.

Q. (By Mr. Farley): You are the same Mr. Brush who testified in the trial before Judge Tuttle? A. I did.

Q. You testified there you had experience running back to the beginning of this century, I believe it was, in the design of the first Olds' engines which were the first production job? A. The manufacture of them, and for production reasons, to adapt certain work pieces to certain shop methods. I did a little redesigning, which the Olds Company accepted, and which was incorporated in that product.

Q. And later you were with the Cadillac Company; then, with the Oldsmobile Company, wasn't it? A. No.

Q. Or, Oakland?

The Master: All of this is set forth in his testimony in the lower court; I don't think it is necessary to go over it again.

Mr. Farley: I don't think it is.

Q. (By Mr. Farley): Now, in connection with that work, Mr. Brush, you have had considerable experience in production methods, and with manufacturers in the automotive industry? A. Yes, I have had a great deal, and some in connection with the **(1358)** making of cams before there was any considerable automobile industry, in the shop work quite apart from automobile production. We have many uses for cams of various shapes, and very much more intricate cams than these that are here under discussion.

And, I have made, and seen made, cams for use in the shop by the shaper method, by the milling methods; so that I am very familiar with the mechanical problems involved in the production of cam form throughout a very wide range of shapes.

Q. Now, you were present here in the court room during the testimony of Mr. Boesen at the conclusion of the last session? A. Yes.

Q. You were also present during an interview I had with Mr. Oberhoffen some months ago? A. Yes.

Q. And, during the discussions with Mr. Oberhoffen, you recall that we requested him to make some suitable sketches illustrating a certain type of cam shaft shaper construction? A. Yes. As the result of some suggestions he made as to ways in which the shaper method could be applied to, and specialized for certain different work pieces than those that the original shapers were used on.

Q. And, Mr. Oberhoffen requested that in view of his trembling and shaky condition of his hands that drawings to illustrate that would be rather difficult for him to prepare at the present time, and requested that we have drawings made to embody the idea which he communicated to us. A. To illustrate an embodiment of that idea, yes.

(1359) Q. Now, you talked to Mr. Boesen, did you not? A. I did.

Q. And, I show you the drawings, Exhibits 268 and 269, and will ask you whether or not those drawings correctly illustrate and depict the idea described by—or, the type of construction described by Mr. Oberhoffen (handing documents to witness)? A. They do.

Mr. Spohn: Your Honor please, may it be understood this testimony is subject to our general objection.

The Master: Yes, I will reserve a ruling as to all this testimony. You may proceed.

Q. (By Mr. Farley): Will you explain to the Court the construction illustrated in these two blueprints, Exhibits 268 and 269, beginning with Exhibit 268? A. Your Honor will, I think, recall that it was pointed out that this Model T Ford cam shaft, and this Model A Ford cam shaft, the Model T being Defendant's Exhibit 34, and the Model A being Defendant's Exhibit 234, that owing to the designer's choice in designing the engine to provide the Model A cam shaft with enlarged bearings which would have a diameter large enough to include the span of the cams, that owing to that change in the work piece it was not feasible, without change in the work piece, to use the shaper method of roughing these cams preliminary to case hardening and grinding on the Model A shaft on the shaper, with all of the tools cutting in one direction; that owing to the smaller bearings on the Model T, it was possible to shape the cams with all of the tools cutting in one direction, and that was done.

(1360) Now, Mr. Oberhoffen's suggestion was that since certain of the tools that would have to cut away from one of these large bearings, since those tools could not back up and get in position to start the cut on account of interference with the large bearings, certain of the tools would have to cut in the opposite direction, and Mr. Oberhoffen suggested that since certain tools would have cut in the opposite direction, the natural thing for a tool designer, from his standpoint, would be to just reverse half of them, so that half would cut in one direction and half in the other. So, he suggested that a sketch should be made illustrating that reversal of half of the tools, and a further sketch illustrating an alteration in the embodiment of the method in the shaper, so that half of the tools could be lifted for a return stroke while the other half were cutting, and, conversely, that the other half be lifted while the first half of the tools were traversing and cutting, traversing their cutting stroke.

I don't know whether your Honor recalls or not, but the lifting of the tools where they all cut simultaneously in one direction was done in the original shaper by lifting the master cams and the tools as a unit. The whole thing

was cammed up and down in synchronism, with the cutting stroke in one direction and the return stroke in the other.

Mr. Farley: Just on that point there, I don't know that any of the prior witnesses did describe that mechanism completely to you; did they?

The Master: Not in detail, I don't think.

Q. (By Mr. Farley) I think at that point you might refer to the drawings, I think, Exhibits 254 and 255 (handing the drawings **(1361)** above referred to to the witness). A. The master cam shaft, which I am indicating on Exhibit 254, is shown here at the top with a driving arrangement off the vertical spline shaft through a worm wheel, and those master cams and the tool slides are all on a slide unit, and can move vertically, and that slide unit, the whole unit, is cammed up and down in synchronism with the cutting and return movement of the work piece, so that all of the tools are lifted at their return stroke.

The Master: Where is the cam shown on the drawings?

A. Now, on this drawing, Exhibit 255, it is shown in dotted lines, a pair of rollers that span a cam, and also shown in dotted lines, and those rollers are pivoted on an axis shown over at the left.

Mr. Farley: The rollers are marked "R" in lead pencil on the sketch.

The Witness: That is right.

Mr. Farley: Maybe it would be a good idea to mark the pivot there of the rollers.

A. (Marking exhibit.) And that pivot carries an eccentric—not clearly shown in detail—that eccentric moves the slide carrying the master cam, and the tool slides up and down for moving the work.

Q. How about the cam that actuates the two rollers "R"? I call your attention to the part marked cam "C"? A. Well, it is not very clear there. There are a number of pieces superimposed here, and the cam contour is not very clearly shown, although the action of the mechanism in doing that is clearly understood, but to pick out the details and show **(1362)** the cam contour,—that is the

operation, and that takes the place, that mechanism, for lifting the whole group and returning it to the cutting position on the work, is a substitute for the ordinary clapper box, as it is called, that is used on planers and shapers, and I might interpolate that planer and shaper to the shop man and tool-maker merely designates a difference in two tools, in structure—that is, the planer, as we ordinarily speak of it in the shop, is a tool of the same,—machine tool of the same type as the shaper, except in the planer the work piece moves under a tool, and in the shaper the tool moves over the work piece. In each machine there is simply a relative movement along the line of travel between the work piece and the tool. And, on the return stroke in each, the ordinary practice is to permit the tool to lift by a hinged construction, so that it can swing up out of the way of the work and not interfere on the return stroke. So that, so far as method of of machining is concerned, planers and shapers are embodiments of the identical method of machining.

Now, this so-called cam shaper in ordinary shop nomenclature would be called a planer rather than a shaper, although the method practiced is identical in both. It is a cam shaping machine in a sense that it shapes the cam, produces the shape of the cam desired for the cam preliminary to case hardening and grinding.

This original embodiment of the shaper method of profiling cams has the ordinary crank shaper movement in it, which is a swinging Scotch yoke.

I don't know whether your Honor will recall the old **(1363)** steam fire engines that we had before we had gasoline fire engines. They had a normal Scotch yoke for maintaining the rotating relationship between the reciprocation of the pistons and the crankshaft. The ordinary engine uses a connecting rod between the piston, or a crosshead, and the crank, and that gives the modified sine movement, the sliding Scotch yoke gives a true sine movement, and shapers in the shop, many of them, use the Scotch yoke; that is to say, a crank pin journaled in a block which slides in a parallel yoke, only in the shaper the arc, in place of sliding back and forth, swings, and that gives the quick return movement. That is to say, when the crank pin traverses the arc, which swings the pin adjacent to the pivot of the yoke, because the leverage

is shorter, that gives the quick movement, and when it traverses the arc which brings the crank pin away from the pivot of the yoke, this gives a slower movement, and that gives a quick return movement.

Q. Suppose you mark the yoke there with a reference character "Y." A. I will draw a pair of reference lines from the extreme end of the yoke bars.

Q. The extreme lower end? A. Yes, and run those two reference lines to a letter "Y," and the crank pin, I will indicate with a letter "P" right on its center.

Q. You have two "P's" on the drawing now. A. Well, I will take the letter "K" (marking upon the exhibit), and the block which slides in the yoke I will indicate by a letter "B."

(1364) Mr. Farley: The witness has made all those reference characters on the Exhibit 254.

The Witness: Now, I spoke of that swinging Scotch yoke.

Mr. Farley: You understand that principle?

The Master: I have a general idea of it. I don't know whether I could actually make a model of it.

The Witness (Continuing): I spoke of the swinging Scotch yoke, and the fact it was in common with all shapers—I mean tool-room shapers in ordinary shop practice—because Mr. Oberhoffen said, of course, if you are going to make the shaper cut in both directions, you wouldn't want the quick return movement. So, he said what he would do in place of using the swinging Scotch yoke, he would use an ordinary sliding Scotch yoke. That is, attach the bars of the yoke, side bars of the yoke, directly to the slide, and let the block slide in the yoke formed by these two side bars, and the crank pin journaled in it.

And, the sketch Exhibit 268 shows a diagrammatic illustration of that movement, which gives movement of equal velocity in both directions.

Mr. Farley: Suppose you mark on sketch Exhibit 268 "K" for the crank, and "Y" for the yoke.

A. (Marking same on Exhibit.) I put a "Y" on each bar of the yoke.

Q. (By Mr. Farley): The yoke in Exhibit 268 is what we would term a depending lug or bracket coming down

directly from the bed of the machine? A. Directly, not from the bed of the machine, but from the slide which carries the work piece.

(1365) Q. That is right. A. So that the movement of the yoke would be a movement of the slide carrying the work piece, and consequently a movement of the work piece.

Q. That is, the reciprocating slide. Suppose you mark the slide, reciprocating slide on Exhibit 268, with the reference character "S."

(The witness thereupon marked the exhibit.)

Q. All right. A. I have marked the left-hand end of the work carrying reciprocating slide with a capital "S." Now, since the half of the tools must be lifted on your embodiment of the cam profiling or forming method, while the other half are down, I asked Mr. Oberhoffen what type of lift he would suggest for that, and he suggested the very obvious expedient of simply shortening the distance between the master cam and the cutting point of the tool on the return stroke.

You see, on the original shaper there was a spring which held the tool slide up against the master cam, so that the master cam could move the tool up and down to produce the profile desired of the cam. Now, obviously to a mechanic, it is a matter of pure designer's choice whether you would move the master cam and with it the slides for the return stroke, or whether you will simply shorten the distance between the point of the tool and the master cam on the return stroke. They both will accomplish the same thing, namely, lifting the tool away from the work on the return stroke. So that, at Mr. Oberhoffen's suggestion, I had the illustrative sketch, 269, made up, which shows a cross-sliding wedge member **(1366)** actuated by a suitable cam which will push the wedge to the left to bring the length between the tool point and the master cam the amount which will correspond to the desired profiling of the cam and which, by movement to the right, will permit the lifting spring on the tool slide to lift the tool as much as the wedge member permits. And, in that way the tools can be lifted off the work for the return stroke just as they were in the original, except in this case each tool has its own cam to control its lift to clear the work;

and, by fitting half of these cams so that the desired half of the tools are down when you want them to cut, and the other half of these cams, 180 degrees around on the cam shaft, why, you have the desired lifting of half of the tools for one return stroke while the other half of the tools are cutting, and vice versa.

Q. Now, I notice, Mr. Brush, Mr. Boesen, when he was testifying, placed a number of reference letters on the drawing, Exhibit 269. I wonder, now, if you would, by referring to those reference characters, explain to the Court just what the operation would be on one stroke of this tool "T" as shown in Exhibit 269? A. Yes.

Q. With the parts in the position as shown now, the parts are now in the position for the tool to be in its cutting, lowered cutting position, is that correct? A. That is correct.

Q. Very well. A. Your Honor will appreciate that the method of producing a desired cam profile by a shaper or planer has nothing whatever to do with the number of cams you are producing. As you **(1367)** increase the number of cams, you simply repeat the practice of the method for each cam. The method has to do and may be practiced on a single cam, or there may be any desired multiple of the practice of that method incorporated in any one machine or fixture. So, as Mr. Farley suggested, it is sufficient to describe the action of one tool, and that then describes precisely the action of any other tool, or all other tools that are performing the same functions at the same time.

In other words, if I describe the action of this tool I will be describing the action of the three others, which make the set of four.

Now, this sketch shows the lifting cam "C" in position to give the proper full extension of the distance between the rider on the master cam, and the point of the tool, so that work piece traveling under the tool will be cut by the tool down to the profile contour desired on the cam. When that stroke has ended, as it will end when this cam "C" is a quarter of a revolution further, then the roller, rider "R_1," which is mounted in the rider "R" will move backwards under the urging of the spring "S" following the contour of the cam "C."

Q. By "backwards," you mean to the right in the drawing? A. To the right. The wedge member "S" will move backwards.

Q. Wedge member "W"? A. Wedge member "W," under the actuating force of the spring "S," will move backward a distance corresponding to the throw of the cam, and that will permit the spring "Q," the lifting spring of the tool slide, to push the slide up until the cam rider "Z" is again in contact with the wedge member "W."

(1368) With the wedge member in a position moved to the right, that shortening of the distance between the point of the tool and the cam rider permits the tool to be lifted out of engagement with the work by the spring "Q" for the return stroke. It is just one of the very many designer's choices as to how you will lift a tool on a shaper or a planer on the return stroke preliminary to a succeeding cutting stroke.

Q. Now, is there any mechanism at all similar to the spring "Q" in the drawings, and in the shaper, as originally constructed in accordance with the drawings 254 and 255? A. Oh, yes, the same spring is there to lift the tools. This spring "Q" for holding the rider against the master cam is also shown on this drawing, and I will draw a reference line there and put a letter "Q" on that. That is the same spring for the same purpose, namely, of holding the rider of the tool slide against the master cam at all times.

Q. I note now, Mr. Brush, on the drawing, Exhibit 254, that there are a number of cams which have been marked with the reference character "M." Do you see that? A. Yes.

Q. Now, is there any similarity between the cam shown here and the cam "M" as shown in Exhibit 269? A. Oh, there would be no reason for any dissimilarity; let us say, except this is an illustrative drawing, this drawing 269, it is intended to illustrate the identical master cam that would be shown in Exhibit 254 if the work piece in each case were the same. So, the master cams used with either methods of lifting the tools for the return stroke would be identical if the work piece was identical.

(1369) Your Honor understands that each work piece must have a master cam which has a proper functional relationship to the contour of the cam to be made.

Q. Now, I think for clarity, Mr. Brush, it might be well to take this Exhibit 268 and mark each set of tools. I think in the original drawings, or rather, in sketch 269, we have marked the tool "T," and I suggest that you mark the tools "T" on drawing 268, which would cut in the same direction as the eight tools on the old Model T shaper. A. Your Honor, by looking at this drawing, Exhibit 254, you can see that these tools have a clearance angle on the bottom going upwardly and towards the left, which indicates that the tool cuts with a movement to the right. Consequently, the four tools in the sketch 268, which correspond in their cutting stroke to the eight tools in the original embodiment of the cam shaper, I will indicate by four letter "T's." (Marking same on Exhibit.) And, the set which have been reversed to cut in the opposite direction, I will indicate by a similar reference, similar reference lines drawn to the left from them and mark those "T_2."

Q. Now, Mr. Brush, I think it might be well in view—is there anything here which indicates those tools which would be up or down, this particular sketch 268? Suppose we do this, consider the four tools "T," and that the shaper is now getting ready to make a cut, perform the cutting stroke. In what position would the cam "C" be at that instant? A. The cam "C" would be in a position 90 degrees from that shown on drawing 259. That is to say, this drawing 268 shows the position of the tools just at the end of a cut of the set of **(1370)** tools "T_2." That is, they are shown just having finished their cut.

Now, that will be at the moment when tools "T_2" will be lifted and tools "T" will come down preparatory for their cut. So that, the position shown on 268 would correspond to a position 90 degrees from that shown on 269. For the purposes of illustration, drawing 269 showed the wedge in, and the tool down to the contour of the cam.

Q. Now, as far as the operation of the shaper is concerned, and the shaper principle, what have you to say as to whether or not the machine of the type shown in the drawings, 268 and 269, follows or departs from the original machines as shown in Exhibits 254 and 255? A. The method of producing cam shape, or contour, or profile is identical. The embodiment of the method has been varied, as every competent machine tool designer and machine tool

fixture designer must know how to do, how to adapt a method to a different work piece. That is the competence which makes a machine tool designer, or a machine tool fixture designer. It is the ability to take a proven method, and it is still simpler if there is a proven embodiment for a different work piece that has been specialized to one work piece, and re-embody the same method in a machine tool, or a machine tool fixture, so that the same method can be practiced with maximum efficiency on a different work piece.

That is what machine tool designing and machine tool fixture designing essentially consists of. We design special machine tools—and, I will say that the Ford Company was the pioneer, in this country at least, and I think in the **(1371)** world, in having machine tool designers build machine tools where the whole machine tool was specialized to a single—very often a single operation, on a single work piece.

Now, in the old days much, if not most, of our production was done by taking machines that were more universal in their application to a wide range of work pieces and providing them with fixtures or attachments that were specialized. But, the Ford Motor Company went further when and after they initiated the production of Model T, and established a practice, where efficiency demanded it, of designing a whole machine tool around a work piece, or, perhaps, a single operation on a work piece. So, for, let me say, from the early days of the production of the Model T car in the automotive industry, it has been a regular practice, and in a way a measure of the competence of the machine tool designer, his ability to take a proven and embodied method of operating on one work piece, and designing either a whole machine tool, or a special machine tool fixture, to apply that method to a different work piece.

Q. Would you say whether or not the shaper, the Model T cam shaft shaper, as shown in these Exhibits 254 and 255, is an exemplification of that designing of a special machine around a work piece to do a particular operation? A. Yes. It is a perfect example, because there is a machine tool which was so highly specialized that any considerable change in the work piece takes it out, entirely out of the range of that machine as built; but that, of course, is not

to say that it takes the method out of the range of a wide variety of work pieces, because that simply requires normal competence **(1372)** on the part of the machine tool designer. Take that method with that proven embodiment, and simply make another embodiment of that method, which other embodiment is specially adapted to the desired other work piece. That is routine.

Q. What would you have to say as to the availability to the Ford Company, let us say, in 1924, of the use of a construction such as is shown in Exhibits 268 or 269?

Mr. Michael: Your Honor, I hardly think this witness is qualified to say what was available before 1924.

Mr. Farley: I think he is quite qualified, your Honor please, as an experienced man, knowing machine tools, and things of that kind.

The Master: Well, I think he would be qualified to express an expert opinion on whether the modifications here are something that have developed subsequent to 1924, or whether they were pretty generally known at that time. I will overrule the objection.

Read back the question.

(The last question was thereupon repeated by the reporter.)

A. Of course, it was just as available then as it is today. These sketches do not show a single mechanical principle, or type of device that wasn't generally known to mechanics long before 1924. Given the record of the shaper embodying the method for one work piece, given the new work piece, and the desire to re-embody that method in another machine tool specialized, there is no problem at all, and that is only one of a half dozen different ways of adapting the shaper method to that particular work piece, type of work piece.

Q. We have here, Mr. Brush, a cam shaft, Defendant's Exhibit 35, **(1373)** which was introduced in the trial before Judge Tuttle, and which is one of the Fordson tractor shafts. Will you compare that with the showing of the cam shaft on this Exhibit 268, and state what particular type of cam shaft is shown in the Exhibit 268? A. Well, the illustrative blueprint, 268, is drawn around this particular work piece. That is to say—

Q. It shows the same spacing of the cams, the same spacing of the bearings, and the same relative diameters of bearings to cams? A. That is right. It was by my instructions it was drawn to illustrate a set-up of tools for that shaft.

Q. Now, as far as the action of the cutting tools in performing their cutting stroke, would the tools "T" perform their cutting action in any different manner in the showing of Exhibit 268 than they would in the original? A. Certainly not.

Q. Now, how about the tools "T_2"? A. No difference there. They are doing the job of a shaper or a planer tool getting down to the desired depth of the cutting stroke, raised for clearance on the return stroke. That is all there is to that. And, that is just as old as planers and shapers in general.

Q. How about the difference between the construction of the Scotch yoke, as you termed it, originally, as shown in Exhibit 268, as compared with the one shown in Exhibits 254 and 255, the old model T shaper? A. The action in the yoke or crank and the block is the same. The yoke in this case is a true Scotch yoke, having a straight reciprocating motion at right angles to the bars of the yoke.

(1374) Q. And, would your true Scotch yoke shown here function in any different way otherwise than with respect to the speed, modifying the speed of the reciprocations? A. Not at all. The swinging Scotch yoke is used on shapers and has been for a great many years, to give a quick return where cutting is only in one direction.

Q. Now, how about the action of the cam "C" in Exhibit 269 for raising or permitting the raising of the tool holders by the spring "Q"; to what extent, if any, does that modify the principle of operation of the parts in the original machines? A. That doesn't modify it at all. It is just an alternative, and certainly a designer's choice, alternately, of a way to lift the tool on the return stroke so it won't drag.

Q. But, in this particular type of construction, drawing Exhibit 269, you have to have, as I understand it, eight cams, one for each of the tools? A. That is right.

Q. And, how does that compare with the original machine? A. On the original machine, only one cam was

used, and that lifted the whole battery of eight tools for the return stroke, and moved them down for the cutting stroke.

Q. Before discussing this matter with Mr. Oberhoffen, had you personally considered the proposition of reversing four of the tools on this shaper? A. Yes, sir.

Q. And, did you have any particular conception of any means for doing it yourself? A. Oh, I think I should probably have used, in place of a wedge, if I had not been taking Mr. Oberhoffen's suggestion, I should **(1375)** probably have used a broken toggle in there to vary that length controlled by a similar cam. Again, it is just a designer's choice, just which construction he chooses to use.

Q. Were you particularly impressed at the time—state whether or not you were, with the suggestion of the wedge by Mr. Oberhoffen as being something unusual, let us say? A. Not at all. It is simply one of the many ways of doing the job, and it is just one of the several ways of doing it that any designer would consider before he constructed the machine. He would pick out the one he thought to be most durable in action, not too expensive to build; he would simply exercise what we engineers call a designer's choice, and use the one that he personally liked best.

I will say this, that I have many times had occasion to give to machine tool designers the embodiment of methods in fixtures for machine tools. I never yet gave two designers the same work piece and the same method to embody and got identical embodiments for two of them. There will always be a sufficient variety of choices available to any competent designer. It would be a strange thing, indeed, if you gave a problem to two independent draftsmen who were reasonably competent fixture designers and got identical results from the two of them. It just doesn't happen. There are too many choices.

Q. Now, when you were mentioning the proposition of the Ford Company, I think you said was the pioneer of the special machine, you said that prior to that time it was more or less the practice to take a standard machine, such as could be purchased on the open market, and to make attachments for **(1376)** them. Did you have in mind any particular construction that you know of that would be illustrative of the standard machine ~~production~~ attach-

ment for a special job? A. I think your Westinghouse machining method embodiment is as good an example to get to put that on a standard production lathe.

Q. There has been quite some testimony and discussion in connection with steady rests, and I wonder if you would mind explaining the function of a steady rest such as used in these shapers, such as is shown in Exhibits 254 and 255 and the steady rest as used, let us say, in the Walcott machines? Incidentally, you are quite familiar with the Walcott machine? A. Yes. Your Honor will understand that in any cutting tool there are two reactions between the tool and the work piece. I am now speaking of a cutting tool that moves along a desired path with respect to the work piece, and in moving along that path removes metal.

One, the tool will try to back out of the work, and the amount of the force with which that tries to back out of the work will depend somewhat on the sharpness of the tool, and the form in which it is ground. But, there will be some force tending to back the tool out of the work,—not much with a properly-ground tool.

Then, there will be a very substantial force of reaction between the tool and the work piece to produce the cutting movement between the two.

Do you follow me?

Now, on the lathe and shaper, those forces behave very **(1377)** differently, and when I say "shaper" I like to have you understand I am including shaper or planer, because it doesn't matter which piece moves.

Now, on a lathe the greater force necessary to propel the tool through the metal acts tangent to the surface of the contour being cut.

Q. At the point where the tool engages the work? A. Yes. Let me illustrate that, if I may, by a sketch, which I will use, the simple round form.

Q. Just a minute, Mr. Brush, I think we have some sketches already in evidence that probably we could use without adding more sketches to the record. I don't think it makes much difference. No, I think we won't; go ahead and make your own. A. (Drawing sketch) This is very simple. Now, if I indicate a tool at "T," and draw a dotted line outside the work piece to indicate the depth of cut, and I set the thrust reaction between the

tool and the work piece, so far as the pressure necessary to make the cut is concerned, that is a force which tends to move the work piece in that direction, indicated by an arrow, and tends to move the tool in precisely the opposite direction, every action and reaction being equal in nature.

Q. Suppose you put a "T" for "tangent" on that first arrow. A. Well, I will indicate that by "Tan."

Q. All right. A. Now, there is also a reaction, as I told your Honor, but a very much less one, tending to force the work piece away from the tool, and tending to force the tool away from the work piece.

(1378) If we assume on this illustrative sketch that I have drawn these first indicating lines representing the magnitude of the forces, then I may complete the parallelogram of forces and draw a resultant line, which resultant will indicate the direction, and relative magnitude of that resultant force as compared with the other two forces; that is, the first two forces acting simultaneously produce the resultant, and there will be a resultant, backward force on the tool, in exactly the opposite direction.

Now, your Honor can see that in a lathe, the tendency of the cut, of the force which is necessary to make the cut, tends to spring the work piece sideways; that is, to bend it. And, that force will be modified by the force necessary to keep the tool in, as I have indicated, and will have a resultant force.

I am simply duplicating the first parallelogram.

Now, in the Walcott machine, this tendency to bend the work is resisted by a rider on the work called a steady rest, which is placed approximately so as to resist this resultant force. Do you follow me?

The Master: Yes.

A. (Continuing) Now, let us see what will happen. If a work piece, such as Exhibit 234,—

Mr. Farley: Incidentally, that being the shaft that was turned on the Walcott machine.

A. (Continuing) —be bowed so that when it is revolving on the centers in its end, this enlarged center bearing will run eccentric, let us say, .020 of an inch. That figure has been mentioned; it will do for the purposes of discussion.

(1379) Your Honor will see that if the—if you could imagine the tool infinitely sharp, and the material cutting with infinite ease, and you turn this cam as this one on the left, or this one on the right of that center bearing, the base circle of that cam would be displaced .010 of an inch from the true center of this cylindrical center bearing. Do you see?

The Master: Yes.

A. (Continuing) All right. That would mean that when you hardened this cam shaft, and attempted to grind it, you would have a .010 displacement from the cam to the center bearing. If you ground the cam so you took a uniform cut off of them to finish them, you would have an unnecessary and excessive amount of stock in order to clean up the center bearing. So, it is desirable in shaping these cams, I mean roughing them to the form to be ground, that the roughed cam have its desired center of rotation coincident with the desired center of rotation of the center bearing. That is necessary if you are going to have production efficiency on these grinders and not have it case hardened very deep to allow for these errors.

Q. By "shape of the cam" you are referring to the shape of the cam by a turning operation? A. Yes. So far I am discussing the turning operation. Presently I will compare this with the shaping or planing method of giving you a desired profile.

Now, your Honor will see that even if we have some force necessary to hold the tool into the work, which we do have, supposing this shaft would be bowed, this force to hold the **(1380)** tool in would be about the same in all directions, even though the work piece is crooked. Consequently, although the work may spring somewhat under that force, it will spring alike, and still, even though there are forces, we will get this same displacement area. Do you see?

Now, when you take steady rests, which simply resist the thrust of the tool sideways to bend the work, it still permits the error in the work to reproduce itself, and in that Walcott machine, if the work be .020 crooked, there will just be a .020 error in the placement of the cam contour. This type of steady rest does not resist movement of the work to and from the tool. It is put there to carry

the heavy load of these resultant forces. And, if you took the tool away, and put a crooked piece of work in there under that steady rest, and rotated it, it wouldn't move up and down toward the steadying roll, but it would move sideways toward and from the tool, just as though the roll wasn't there. So, it was necessary on this Model T shaft, for example, when turned in the Walcott machine, to have the shaft straight, within the permissible limits of error of grinding after case hardening.

Now, let us take the shaper method, and—

Mr. Farley: Before we leave there, I think we will have the first sketch, the sketch just made by the witness, marked Exhibit 272.

(The document above referred to was thereupon marked Defendant's Exhibit 272 by the reporter.)

A. (Continuing) Now, on this first sketch I showed diagrammatically and illustratively the kind of force you are dealing with in (1381) lathe work. Now, I want to follow the same analysis with the tool forces on the shaper or a planer.

Now, in that case, in place of cutting around it, you cut along it, along its parallel elements. We say the form of this kind have elements which are parallel to the axis of rotation, and the shaper or planer cuts along these elements so that when I illustrate a tool, or a work piece for profiling on a shaper or planer, I must now draw a work piece looking at it sidewise, and I will put my dotted line to indicate the amount to be removed above, and I will indicate a similar tool above that.

Q. (By Mr. Farley) Suppose there, Mr. Brush, you extend your work piece a little bit, so that this part would indicate a cam, and to the right, and the recess portions between the cam. A. And, I will draw a line indicating a center line, which I will mark, "C. L." Now, then, your Honor will see that we have the same forces of reaction between tool and work. That is to say, we have our major force acting along this line, the tool tending to push the work to the right, and the work tending to push the tool to the left.

Q. This line you just mentioned, this line I think you better give it some sort of a designation. A. I might mark that "C. F.," cutting force.

Q. And the other line? A. The other line, the lesser force necessary to hold the tool into the cut, I might call—

Q. (Interposing) You have drawn a vertical line; the first one was a horizontal. **(1382)** A. That is right. I might indicate that force line as "R.F." or radial force.

And, again, we get a pair of forces which act—a complete parallelogram of forces, and draw a resultant, so that the reaction of the tool on the work tends in the shaper to force the work down by the magnitude of the radial force, and the cutting force tends to force the tool—force the work along its axis. But, there that major force is resisted by the mounting of the work. There is very little tendency to bend the work, because the cutting force is resisted by the mounting of the work piece axially so that when, as in the shaper, an embracing steady rest fitting on the underside of the work piece was used—

Q. (Interposing) You have drawn it under the cam instead of the recess portion. A. I have just drawn some lines in here which I will call "S.R." for steady rest.

Q. Just a minute, Mr. Brush, don't you think you better make your steady rest in the recess portion rather than on the cam? A. I was thinking for a moment of a round piece, but that is immaterial. We will treat this as a cam, and now the steady rest might be on the center bearing, or it might be between the cams. The center bearing is a convenient place, and I might amplify this sketch a little bit, and show a center bearing in here alongside of the cam.

Now, then, a steady rest under this center bearing, and particularly one which fits that through a considerable arc, extends up here.

(1383) Q. You have marked the part indicating steady rests, "S.R."? A. Yes. And, we will mark this part, "C.B." for center bearing.

Now, your Honor can see that so long as this force tending to force the tool out of the work, so long as that has magnitude enough to spring the work down against the steady rest, regardless—up to that limit—regardless of how much that piece may be bowed, the cam formed will be cut concentric with the axis of rotation of that center bearing when running in the steady rest.

Now, the boys were right that they needed to restraighten and keep those pieces straight for the Walcott

machine. It wasn't a question of whether they had one or three steady rests; the type of steady rest used on the shaper, and the type of cut, and the type of machine, made the shaper automatically correct, and completely correct, all bowing of the work up to an amount of bow and stiffness that would hold the work away from the steady rest against that radial force of the tool.

Now, then, even if that radial force of the tool were not sufficient to hold the work clear down to the steady rest, still the error would be much less in a shaper than in a lathe with the steady rest of the type used by Walcott, because if this radial force didn't exist at all, you can readily see that if this work were bowed .020, that means when the bow was upward, it would stand normally .010 away from the steady rests, and when it turned over it would try to go .010 below the support of that steady rest, but couldn't. Consequently, with a .020 bow in the **(1384)** shaper, as the radial force had no effect at all, it would only have .010 there instead of .020, just half; whereas, in the Walcott lathe as built and used, the bow of the work piece will reflect itself practically 100 per cent in error between the concentricity of the cam formed and the center bearing.

Q. What would you say, Mr. Brush, as to the possibility of the tools in the shaper with the model T shaft, which we have before us, as they performed their cutting stroke, pressing the shaft down against the steady rest? A. The radial force of the several tools cutting simultaneously on this model T shaft would be very much more than sufficient to hold the shaft to the steady rest, as much as a .020 eccentric; that is, a .020 of an inch bow.

Q. How about .030? A. Well, it would depend on the sharpness of the tool, and the form they were ground. .030 would only require .015 bending of that, and I think I could do that much with my thumb. Certainly .020 error would wash out completely, and .030,—well, if .020 will wash out, you might have .017 of error; whereas, on the Walcott you would have .030, if you had that bend.

Q. Now, would that action you have just been describing be any way influenced or modified by the number of steady rests that were used on the shaft and the shaper? A. No.

Q. Now, how about the Walcott machine, would it in any way modify the necessity for a straightening operation of the shafts in the Walcott machine if one were to use, say, **(1385)** three or four steady rests? A. Not a bit. Steady rests of the type used on that Walcott machine would still permit the bowed error to reflect itself in the tool work piece.

Q. There was a question, a certain showing in the record on appeal, shown to Mr. Pioch when he was on the stand, and that was one thing I inadvertently neglected to ask him a question on, on re-direct examination. I direct your attention to the showing in Plaintiff's Exhibit 41, to which Mr. Pioch's attention was directed, and how many steady rests does that show there? A. That shows four steady rests, and, your Honor, by counting the number of heads which you can see indicated here, I gather that that is a Walcott machine set up for a line 8; that is, there were approximately 16 cams on there; 1, 2, 3, 4, 5, 6, 7, 8, 9, 10, 11, 12, 13, 14, 15 and 16.

Now, because the steady rests there have to resist the cutting force, or cutting reaction, they need four steady rests on that, but if those steady rests are of the type on the Walcott machine at Highland Park, they will still have just as much need to see the work piece is straight in its free position as though they had one. The cutting force is very considerable, and you take a long line eight shaft, if you didn't have a steady rest to resist the cutting force, you would bend the piece until it jumped out of the machine, because, as I tried to make clear, and hope I did, in the lathe the cutting force tends to bend the work piece; in the shaper or planer, the cutting force merely tends to move the work piece axially, and is resisted in compression by the work piece with no tendency to bend the work piece except **(1386)** for the radial force, the amount of force necessary to keep the tool into it at its desired depth.

Mr. Farley: I offer the second sketch made by the witness, or, rather, ask that it be marked Exhibit 273.

(The document above referred to was thereupon marked Defendant's Exhibit 273 by the reporter.)

Mr. Farley: And, I offer Exhibits 272 and 273 in evidence.

The Master: I will admit these exhibits as supplementing the testimony of the witness.

* * * * *

(1402) Q. Now, in that connection, Mr. Brush, this hump on the work of the shaft, Exhibit 234, in the sixth cam, you were just referring to, would the sharpness of the nose of the cam, or bluntness of the nose, let us say, in any way affect that general proposition? That is, would the likelihood of the error occurring be more pronounced in the sharp nosed cam or in what we would term a blunt nosed cam? A. Well, of course, we might put it this way. If you had no cam form at all, then this overhead will be a circle and be another problem. The more your cam departs from the circle, the more violent those movements have to be of the tool oscillation as controlled by the overhead cam. So that, the more pronounced and sharp the cam movements are, in general, as a general proposition, the more difficulty you will have in making the roller follow the track of the overhead **(1403)** cam.

Q. How would that departure from the circle, as you put it, how would that influence or affect the work of the shaper? A. Oh, not at all. That doesn't have any effect on that at all.

Q. Let us assume, just for the instant, that if on the cam, the side of the cam,—and, by the side of the cam I mean the contour between the base circle and the exact nose of the cam—if we were to assume that was a substantially mathematical straight line instead of an arc, a curved surface, as they actually are, how would that affect the machining operation on the Walcott machines? A. Well, again, that speeds up; the rate of movement of the tool in its oscillation, about its pivot, and as I said, the faster you have this oscillating movement, the more difficulty there is in doing it at high production speed. Now, as far as the shaper is concerned, that doesn't make any difference at all. That doesn't speed up anything enough to be a factor.

Your Honor understands that the shaper completes the desired profile contour of the cam in one revolution and then it is desirable in the shaper to let the shaft go around again with a staggered cut to remove the ridges between cuts, so that the grinders will have less to do,

so that the cam shaft only makes two revolutions for a complete job on the shaper. So that, the form of that master cam could, if necessary, be very abrupt moving at that low speed. But, when you run this at 200 revolutions a minute, and rotate the cam, perhaps, 100 times or 150 times in cutting **(1404)** a cam, all those movements have to be done, not twice, but 150 times in a very short interval of time. That is what I meant by machines where you have a great many moving parts that you have to go at high speed, and at widely varying velocities. That is always a difficult mechanism, to make rigid and to make durable, to make a good producing machine.

We avoid that if we can, in producing fixtures on machine tools for large production.

* * * * *

(1406) Q. (By Mr. Farley): Mr. Brush, in your own experience in connection with production of automobile parts and automobiles, and, I understand that from your testimony before Judge Tuttle that sometimes not only from the early days of the industry, but right up to the present time, you have in recent years been consulted and have designed parts for the LaFrance Company, as well as other companies, isn't that true? A. Yes. And supervised it and consulted in the practices of **(1407)** production.

Q. Now, in that connection, in this long experience of yours, what has been your experience in connection with the practice, if there is such a practice, of re-designing parts of a motor or any part of a car to facilitate the machining or production of that part with machines which may or may not be available? A. Well, of course, for many years, and to the present day, to some extent, parts that are to be made are frequently designed where their efficiency will not be impaired to be adaptable in production to existing machines or fixtures.

That is to say, your Honor, there are two types of designer's choice. One is a design of work piece. If you don't sacrifice anything in it to fit a method of making, or a machine which embodies a method, or to determine the work piece, and adapt the method of operation to the work piece; sometimes one is practiced. Sometimes the other; and sometimes a little of both. It is just what seems expedient to the engineer who is—or engineers, who are responsible for the design and production.

Q. You heard Mr. Pioch's testimony concerning the modification of the bearings of the Model A car, did you not, Mr. Brush? A. Yes, sir.

Q. Now, what would you say as to whether or not that would in any way affect the operation of the Model A motor? A. To alter the design of the Model A cam shaft enough so that profiling of the cams could be done with the one-way cutting shaper.

Q. Yes. (1408) A. It wouldn't affect the motor at all, and it is the designer's choice.

Q. And, what would you say as to the possibility of machining that shaft on the old Model T cam shapers, assuming that they had been available as a physical entity in the Ford plant in 1927 when Ford made the change from Model T to Model A; would that affect the functioning or the output of the shaper? A. I think not, provided only this, your Honor—that the spacing of the cams (demonstrating) was near enough identical so as to be within the range of the adjustment of the shaper, and the spacing of the cams, I observe by comparing a Model A and Model T cam shaft are almost precisely identical.

Q. How about the width of the cams? A. Well, they are almost precisely identical. I would say that from inspection, from inspecting the Model T and the Model A cam shafts before me, that practically no change except in the holding features for holding the cam shafts would need to be done to the shapers.

Q. And, how about the master cams which control the contour? A. Well, of course, that goes without saying, I think that the—in fact, I think I said before that for any given cam, size and contour, the master cams must be varied.

Q. This, you heard the testimony concerning the attachment type of modification in which the two-way cutting is incorporated, such as illustrated by this exhibit, the wooden model, Exhibit 256? A. Will you read that?

Q. Yes. I am a little far away, I think. A. I would like to have everybody's indulgence. I am a little (1409) hard of hearing.

Put that on the record. Will you read the question back to me?

(The question was read by the reporter.)

A. Yes.

Mr. Farley: Would you read it again, please? You have the question, have you, Mr. Brush?

A. Yes, and I answered.

The Master: He said yes.

A. Yes, I heard it.

Q. (By Mr. Farley): Now, what have you to say as to the practicability or availability of that sort of a method? A. Certainly practical, and because it involves no departure in mechanical movements or principle of mechanics; certainly available.

Q. The Master asked a question of one of the witnesses as to the possible variation in, or increase in maintenance costs of the shapers employed—that is, suggested modifications over the maintenance cost over the Walcott machines. What would your opinion be concerning that?

Mr. Spohn: Mr. Farley, is your question limited to Exhibit 256?

Mr. Farley: To any of them.

Mr. Spohn: Oh, any of them?

Mr. Farley: Yes.

A. Well, it is my opinion that any of the variations in the embodiment of the shaper method of profiling cams which have been discussed here would lend themselves to more rigid, and therefore, **(1410)** more stable constructions than is possible on the Walcott type of machine.

Q. And, how, therefore, would that affect maintenance costs? A. I should expect maintenance costs of any well-designed embodiment of the shaper method to be substantially lower than the maintenance of any Walcott machine doing the same work.

The Master: As comparing with the original shapers with the Model T, these various shapers would be a less durable structure, would they not?

A. I think the attachment would. I don't think the double-cutting would. And, while there is an increase in the number of parts, the tension on each one is less, and they would be so light on that individual spacing mechanism that I think that that would stand up quite as well as

the mass movement, up and down, of each stroke of the entire slide of the master cam.

You see, in one of these you have a whole group moving up and down at a time. Now, I will say that that is only an opinion. There wouldn't be any considerable difference either way. But, with the light duty, or a little variation in length, it is my opinion that you couldn't see any difference in practice, although there might be a little.

Q. You were referring to the Exhibits 268 and 269 in your last answer? A. That is right.

The Master: I was wondering whether these exhibits, 268 and 269, can have, as you pointed out, with this different type of yoke in uniform velocity at both the return and original stroke.

(1411) A. That is right.

The Master: But, would that tend to slow up the shaper?

A. No. That would, if the shaper ran at the same speed, that is the same number of revolutions per cycle, it would step the speed of the tool-cutting up 33⅓ percent.

Now, if your Honor will recall that cutting speed was about 34 or 35 feet per minute, which for the tool steels available in, oh, 1920 to 1924, is rather ridiculously low.

The Master: They must have considered a desirable speed for the shaper then in use—

A. (Interrupting): Designed and put in use—

The Master: (Continuing): In 1915.

A. 1914.

Q. (By Mr. Farley): 1914 or 1915. A. 1914 or 1915, yes. Yes, I think that the shaper designed was very conservative. I am pretty sure that even as early as that cutting speed of the tool steels available, as I remember, I think, as early as 1914, they could have very readily have used around 50 feet a minute; and, I know that by 1924, for that kind of work, cutting speed of 70 feet per minute would have been perfectly permissible.

The Master: Well, assuming a given cutting speed as being a desirable speed for the Model T type of shaper would operate more rapidly than the modified shaper in Exhibits 268 and 269?

A. (Interposing): If it went—it had the same amount, yes, it would.

The Master: (Continuing): Could you get a more rapid speed on the tool without an undesirable wear or strain on the **(1412)** tool itself? Could you get an increased cutting speed, I should say, in a modified shaper, as in 268 and 269, because of the fact that you would be cutting four cams instead of eight; or would that have any effect?

A. That would have effect only on the parts of the Scotch yoke. And, of course, it is easy to make those things as substantial as you want them.

Now, the question your Honor asked, if the speed of the tool was the limiting factor, and that an equal velocity in each direction would lower the speed of the production, but the fact is that wasn't a limiting factor.

Q. (By Mr. Farley): What was the limiting factor? A. The limiting factor really on the shaper is the acceleration and deceleration speed of reciprocation of the table carrying the work piece. Now, that was quite as high on the return stroke as on the cutting stroke.

Q. That is, the mass to be moved precisely stopped at the end of the stroke? A. Yes.

Q. And reversed? A. That is right.

The Master: Where is the strain there? I don't quite understand.

A. Well, you have got the slide which carries the work piece moving back and forth.

The Master: Yes.

A. Your limit, in my judgment, would come on the ability to start and stop that quickly enough. Now, then, the straight sliding **(1413)** Scotch yoke with a sure sliding movement, would actually be kinder, would actually be a kinder movement than the swinging Scotch yoke. In the original design of that, what they did, they simply followed the old crank shaper practice to use the old quick return, and there is no reason why they shouldn't, because they were cutting in one direction only.

Q. And the type of Scotch yoke as shown in Exhibit 268, with equal speeds in both directions, would decrease

that speed as used in the original shaper, isn't that true? A. That is right. Even if running at the same number of revolutions per cycle, and at the same number of revolutions per minute.

Q. I think, just for the purpose of the record, so we might have that mathematically, I will show you Exhibit 264. Now, with the 220 strokes per minute, the 220 strokes per minute would remain effective, would it not? That is, with the strict Scotch yoke, not the sliding Scotch yoke? A. Certainly. That is what I said.

Q. Yes. A. If you ran your shaper the same speed, the same number of strokes per minute, and the same rate of speed around the cam shaft, the operating time would be identical, but the cutting speed of the tool will be raised precisely 33⅓ percent.

Q. That would mean, Mr. Brush, that in this last tabulation, surface feed of tools on Exhibit 264, 220 strokes per minute. Now, the next reading would be modified. Instead of cutting stroke, 220 degrees, return stroke 160 degrees, it would read cutting stroke, 180 degrees; return stroke, 180 degrees? A. That is right; and that would step the speed up one-third per **(1414)** minute precisely.

Q. And, that would, by exactly the same percentage, modify the limiting factor of the mass and the speed? A. Yes. Because your return stroke would have a 180 degrees in place of 120 to do it in; and the pure sliding curve is a kinder movement. That is, the acceleration and deceleration are lower rates than on the quick return, swinging Scotch yoke type of reciprocation.

Mr. Farley: Do you understand that, your Honor?

The Master: Yes, I do.

Q. (By Mr. Farley, continuing): Now, are you familiar with the Melling patent, Mr. Brush, which we have introduced in evidence here, as Exhibit 209?

The Master: Just a minute. While we are on the question of shapers. Are you familiar with shapers prior to, say, 1925, which did cut in both directions, or planers? That is a novel feature, or, at least, a feature that was never used on shapers previous to that time?

A. Well, now, as a production tool, no. As a tool-making proposition, yes.

Sometimes in the old days in tool-making jobs we would have situations where we would need—I will just make a hypothetical work piece—

The Master: (Interposing): Yes.

A. (Continuing): —would need to cut a surface between two shoulders that could not readily be milled or cut in the opposite direction, perhaps, because there might be a wall that would interfere with it. Now, the clever expedient by tool **(1415)** makers was, at least I thought so, was to bolt clapper box down to make the tool with a little tool holder, with two little screws—this is just diagrammatic (illustrating)—now each one of those tools is a little clapper box itself, and by making them uniformly, using them on a crank shaper, with a short stroke for a cut like that (indicating), where the swing of the Scotch yoke would make the cutting speed the same. That is the same height, and you run them back and forth. I never saw it on a production as a part of a machine, but that is one of the common expedients that tool makers used in making, doing jobs, that they can build any tool equipment that is precisely adapted for it, but that is not a characteristic that I ever saw embodied in a machine as such.

Mr. Farley: Would you mark the sketch an exhibit, please; the sketch just made by the witness; mark it Exhibit 276, please, Mr. Reporter.

(Exhibit No. 276 was then marked by the reporter.)

Mr. Farley: And I will introduce it in evidence.

The Master: I will admit it. What was 274?

* * * * *

(1416) Q. (By Mr. Farley): You are familiar with this Melling patent? A. Yes.

Q. You have read the patent and the claims, and understand them? A. Yes, I have.

Q. And, now, Mr. Brush, insofar as your testimony just before lunch was concerned, you pointed out to the Master how in the Walcott machine, the tool traversed a path, or through the curve of an arc, which was an exact replica of the curve or circumference of the rider roller, 26. And how, as the point of contact between the circumference of the roller 26, and the master cam 24, varied, that the position of the tool or the point of the tool 18,

with respect to the work-piece 25, was maintained exactly the same—will you state whether or not the claims of the Melling patent have anything to do with that particular method of operation? A. All of the claims defined that particular method of operation more or less elaborately, and in different language, but they are all directed to that peculiarity of the Melling machine.

Q. I wonder in that connection you would just consider claim 13 of the patent which is one of the ones that brings out, I think, that particular relationship fairly clearly and— A. (Interrupting): Claim 13?

Mr. Farley: Let's see. Have you got another copy. Just a minute. I would like to have the Master to have another copy so that he could follow.

(1417) A. Mr. Reporter, claim 13, Melling patent number 1,655,655—this claim is as follows—

Q. (Interposing): Go ahead. I am afraid I probably didn't bring an extra copy along. A. "In a structure of the class described, the combination of a reciprocating tool carriage"—that, your Honor, is the carriage, 11; "—a tool holder pivotally mounted on said tool carriage"—that is the tool holder, 15; "—a tool carried thereby"—that is the tool, 18; "—a master cam corresponding to the shape of the work to be cut"—that is the master cam, 24; "—an abutment roller coacting with said master cam for controlling said carriage"—that is the roll, 26, which, as your Honor observed through its coaction with the master cam now pushes the carriage, 11, back, and now permits it to advance towards the work-piece. Continuing: "The radius of said abutment roller" —that is the roller, 26; "—being the same as the radius of the arc described by the cutting edge of the tool,"—now, your Honor will observe that there is a celluloid transparent disc put on the pivot of the tool holder, 15, which just matches with the edge of the tool, and that disc is the same size as the rider, 26; "—and means for oscillating said tool holder,"—that is the cam, 21, acting on the arm, 19, of the tool holder, 15, by way of the roll, 20; "—so that the point of engagement of the cutting edge of the tool with the work corresponds to the point of contact of the abutment roller and master cam."

You see, that is nothing else but a defining of precisely this particular set of mechanical movements.

(1418) Q. Now, are you familiar with the machine of the Gordon patent? A. Yes.

Q. Will you state whether or not the operations or characteristics you have just described are different in the Walcott machine than in the machine of the Gordon patent? A. No, not at all.

Q. Why? A. In the first place, the movement of the cutting edge of the—

Q. (Interposing): Just a minute, Mr. Brush. A. Yes.

Q. My question was—probably you didn't get it—I have the habit of turning away from you when I am asking my question. A. Yes.

Q. My question was whether or not these operations you just described, the method of operation of this machine was different from this Gordon patent? A. I misunderstood you.

Q. Yes. A. It is just as different as—they are just as different as they can be and still have a change in the angular position of the tool. That is to say, the only thing common between the two which you can find, is the fact that in this particular embodiment as the tool moves up and down, it rocks about the center tool, 18, swings about the center of the pivot, and, consequently to the extent that it swings about it, there is a change in the angle of that tool with reference to a horizontal plane. That change is at a different rate, differently timed performance, a different function, so that only in that sense **(1419)** that there is a change in the angle of this tool, is there anything in common between the two sets of mechanical movements.

Q. Well, now, considering that claim again, briefly, Mr. Brush, will you state whether in the Gordon machine, the radius of abutment roller is the same as the radius of the arc described by the cutting edge of the tool? A. No. They have no relation to each other. In the first place, the cutting tool doesn't travel in an arc at all as the tool changes angle. The only arc which the Gordon tool can be said to travel in at all is a radius struck from this pivot, 24, down to the point of the tool. It moves to and

from the work in that very long arc, which is the single line of movement and oscillation of the tool, and is about the point of the tools at the center. And, so, the oscillation of the center doesn't give the point of the tool any movement at all. Whereas, in the Walcott machine, the oscillation of the tool about the center remote from the point of the tool upon which it is pivoted, gives the tool a second vertical movement, that is, an up-and-down movement, in addition to the movement toward and from the center of the work piece produced by the master cam.

Q. Now, you heard the testimony of Mr. Herklotz in the trial before Judge Tuttle? A. Yes.

Q. Did you not? A. Yes.

Q. And were you present during the testimony here before the Master when I went over with him briefly the experience the Ford Company had with the Gordon machine? **(1420)** A. I don't think I was.

Q. You weren't present here, but you were present in the trial before Judge Tuttle? A. That is right.

Q. Now, will you state whether or not, Mr. Brush, the difference in the functioning of the Melling machine, or the Walcott machine, as defined by the claims of the patent which you have just been discussing, would, in any measure, be responsible, or in any measure contribute towards the more, the greater efficiency of the Melling machine as a production machine as compared with the Gordon machine? A. Its movements as defined by the claims and as embodied in the Melling machine are wholly responsible for the greater efficiency of the Melling machine in the production of work-piece such as the Ford Model A cams.

Q. Now, how about the Fordson cams? A. And, in the similar case, Fordson cams.

Q. Now, would you please explain a little more fully to the Court why that is so? A. Yes.

Now, if your Honor will just watch the movement of the tool on the model of the Gordon machine, you will observe that the tool travels toward and from the work-piece in a substantially straight line. That is to say, an arc struck from up here (indicating); at the top of the machine, that it tilts about its point at a center; so as to tilt the tool about its point at the center, so that it com-

pletes a uniform cutting angle and the cam is supposed to do,—what I am making it do with **(1421)** my hand—hold that tool at the proper cutting angle; that is, pointing toward the center of the curve being cut, until it comes to the edge of that sharp toe, and in about six degrees of work, to swing up about 80 degrees of the arc, until it comes back to a proper cutting angle or work.

Now, there is no possibility of making a cam with an appreciable radius so that it will make that cutting angle remain correct. Within those limits of movement, you can't make an exterior of a cam with as much as an inch roller on it right on there, and control that tool swinging about its point so that it will correctly follow the shape of the work, and maintain an angle where the top surface of the tool points at the center of the arc being cut.

Now, then, contrast that where the tool is theoretically supposed to oscillate some 80 odd degrees about its point as a pivot, while the work piece rotates a matter of 6 or 8 degrees.

Now, take the Melling set-up on a cam with a sharp nose, and you will observe that the master cam, riding on the rider roller, starts to move the slide back, and, at the same time, the tool doesn't tilt about the point, but rises up to the nose of the cam.

Now, then, in place of having it tilt about its point while the work rotates through an arc of which the nose of the cam is a chord, the point of the tool now starts to move down, following the point of the cam, and, you see there is a rotation of some, oh, 50 or 60 degrees of the work piece while the tool moves very, very slowly around the point due to the **(1422)** second movement of the tool moving down as the point moves down. Then the tool rises up to the same position that the riding roller does on the master cam.

Now, as I said, while this tool does swing out of plane —two things, in fact, regarding this Melling—one is that the swing of that tool—its change in angle has no measurable value in the Melling device. That is an incidental, and, I might say, an accidental, fact, which is the result of the travel of the tool around an arc which corresponds to the rider arc.

Now, if that tool travelled in that same path, if a different mechanism were made so that tool travelling in

the same path, and didn't swing at all, just travelled straight up and down, there wouldn't be change enough in the presentation of the tool of the work to amount to anything.

That is to say, you saw the Westinghouse device work. Now, there was a change in the angle of presentation and it moved in the same way by moving bodily in place of swinging bodily. More than that, if this rider as it could be, were made a straight line, just a straight shoe rider in place of the roll, 26, if you just put a straight surface there vertically then the tool would do exactly the same job; not swing about a point then; because, then it mustn't—because, then it must travel in the same path corresponding exactly to the shape of the rider.

In that case, if you had a straight rider where that tool would be, just be slid up and down, and it would bear the same relation to form, it would rise up only in place of swinging up **(1423)** to simulate the shape of this rider; it would slide up following the contour of the straight rider; and, in that case, there couldn't be any so-called tilt. So the tilt that actually exists is too small to be of any measurable value, and it is there only because the simplest way to make the tool follow that curved contour which corresponds to the center of the roll. We have the roll here of infinite diameter. Then this pivot would be moving infinitely remote from the point of the tool, and it would just slide up and down. The mechanical motions would be of the same class or category. Do you see what I mean?

The Master: Don't you have this advantage of the Gordon machine over the Walcott machine: That with the Walcott machine, if the following roller fails to follow the master cam you get a different shaped cam, whereas, you don't with the Gordon?

A. Well, you have another situation—I want to, in answering that question, may I call your Honor's attention to the fact that any failure of any of these rollers to follow the cam, doesn't cut into, but leaves additional stock on the work piece. See what I mean?

The Master: Yes.

A. That is to say, it can only approach near the work piece as these two movements make it do, as I have showed you.

Q. Now, just a minute, on that point, you were saying any failure of these two rollers, you were referring to the rollers in the Walcott machine? A. Yes, sir, that is right.

(1424) The Master: If it failed to follow the roller, wouldn't that cut off additional stock here?

A. No, it would not. Let me answer this question first. May I?

The Master: Go ahead.

A. All right. This tool travels in this same circle as the riding roller, doesn't it?

The Master: Yes.

A. All right.

Mr. Farley: You are referring to Walcott, tool 18?

A. In the Walcott, yes. Now, this tool, 18, can never get outside of the tool of the master cam rider. This—that circle lying in that same contour can never lie beyond the tangent to the work piece. You see?

The Master: Yes.

A. No movement of this tool in any direction within that circle can ever approach the work piece closer than the point of tangency. Any departure from that point of tangency removes it away from the point of the work piece; you see?

The Master: I see the point.

Q. (By Mr. Farley): So that the record may be clear on that, Mr. Brush, I will remove the roller, 20, out of contact with the cam, 21, and I will first move the roller, 20, upwardly, into the path of movement of periphery of the cam. What happens when I do that? A. The point of the tools moves away from the work piece.

Q. Now, we will move the roller, 20, back in contact with the cam, 21, and the point of the tool is back in contact with the cams? A. Yes.

(1425) Q. Now, then, I will move the rollers, 20, downwardly, out of the path of the periphery of the cam, 21, and,

now, what happens? A. And again it moves away from the work, because the closest it can get to the work is the point of tangency; so, it never can get closer than the desired point of tangency.

In fact, the duty of the cam, 21, is to keep the point of the tool, 18, right at the point of tangency of this transparent hypothetical disc on the work piece, which is a representation or replica of the actual disc that rides on the master cam.

Q. Now, just a second on that. A. Yes.

Q. Just what does that mean, now, in terms of reproduction of the contour. That is, the fact that in the Walcott machine, the cutting point of the tool can never approach any closer than the point of tangency of the circle through which, or the circular path through which, the point of the tool is rotating with respect to the work? A. That means that it never can remove too much stock. If it fails to move so as to be, so as to remain at the point of tangency, in every case, it will leave additional stock on the work piece. That is inevitable.

Q. And that would mean it couldn't produce the gouges or the hollows in the work piece such as experienced by the Ford Company with the Gordon machine? A. It could not.

The Master: Could I see at this point that design drawn by Mr. Gordon, the Gordon Form cams? Do you have that here?

Mr. Farley: That is Exhibit MM, I believe (handing a **(1426)** document to the Master).

I might say, if the Court please, we have mounted on the model with which Mr. Brush was demonstrating, Defendant's Exhibit 57, the cam, the transparent plate cam, constructed strictly in accordance, and as accurately as it was possible for us to do it with this drawing which you now have in your hand.

The Master: Yes.

Mr. Michael: Yes, but you remember the witness pointed out why the cam on this model was perfectly incorrect.

The Master: Well, the witness pointed out that some of the other dimensions were out of tune.

Mr. Michael: Yes, the witness pointed out that some of the other dimensions were out of tune, yes, in dimensions with the Ford machine.

The Master: Yes, go ahead. Go ahead.

A. Now, if we turn our attention to the Gordon machine model, your Honor will observe that just the reverse of the situation is here, that the master cam which controls the contour of the work holds the tool into the work; that if the roll leaves the master cam, the point of the tool travels into the work piece.

The Master: You are speaking now of the master cam that—

A. (Interrupting): Controls the contour.

The Master: Yes.

A. Not that tilts the tool.

The Master: Yes.

A. This tilting of the tool is a device intended merely to keep (1427) the tool at a uniform presentation to the surface of the work.

The Master: Yes.

A. It has nothing to do with the path which the point of the tool traces.

The Master: Well, nobody ever claimed there was any difficulty in getting the roller, 46, to follow the master cam, controlling the shape of the cam being turned, did they?

A. Oh, yes.

The Master: I thought all the testimony related to was the difficulty of getting the rolls, 53, to follow the master cam, guiding the tilting of the tool.

A. There were both criticisms made. Only the criticism of the following of the master cam took the shape of the reports of the workmen, of gouges cut in the cam in the work piece.

Now, I was going to show you why that happened. You will recall the analysis that I made this morning of reactions between tool and work piece.

The Master: Yes.

A. The major force is tangent. The point of contact of the tool; that is, the cutting force; then, there is a little smaller force—the tendency of the tool to back away from the work, which I called the radial force, which has a resultant—that is upward—as the work piece, 18, is turning in this direction (indicating)—there is a resultant force upwards, outward.

Now, if we take these forces and analyze them, what we get is a force against the work piece at this point (indicating) in pretty nearly vertical—but thrown off the vertical **(1428)** a little bit—but the radial forces that keep the tool in a—

The Master (Interposing): We have that radial force increased here by mechanical advance of the spring, 49, don't we?

A. No, no. I am speaking of the reactions between the tool and the work piece.

The Master: Yes.

Q. (By Mr. Farley): That is the force there required to turn the metal, to tear the metal being removed from the work? A. Yes, that is right. And the tendency of the tool to back away from the work produces a tendency of pushing the work up and the tool down, and that is at a slight angle from the tangent; but, only a slight angle. But, you notice that on the base circle on the cam that thrust at a slight angle, pretty nearly passed through the center of the pivot up here (indicating) at the top where the tool swings to and from the work.

But, now, let us take and turn the cam around (demonstrating) until we get over here on the flank, on the flank of the cam—now, then, a tangent departing slightly from the true tangent, due to the radial force, passes away from this pivot, and misses it some 5 or 6 inches; you see? You see?

Now, as I said, the force is up on the work piece, and down on the tool, so that the force down on the tool which misses the center about 6 inches, in the extreme, or something of that order; and that force tends to do just that—to pull the riding roller away from the master cam that controls the work. That if that roller doesn't follow that means that just what was reported as happening, neces-

sarily has to; that the **(1429)** tools—that the tool goes in before, and might be in a little bit, because that force kept the roller from following the cam. Then it goes over the point, and now the force is reversed tending to push the tool violently away from the work.

That is the line of action. Now, away up on this side—and, I should expect that that sudden and violent reversal might even result in enough spring on that to show a perceptible hump on the other side. But, certainly, unless this spring is a very heavy one, unless the speed of the machine is slow enough, when you swing from the base circle, when you swing from the base circle at a couple of hundred revolutions per minute, come down to this (indicating), the flank of the cam, especially if the stock happens to be there on the work piece, it really amounts to a—well—something like that (demonstrating). That is what it amounts to.

Now, that action is entirely absent on the Walcott machine. Any failure of the Walcott machine to follow its cam movements will result in leaving additional stock, but under no circumstances will it cut into the work piece.

Now, you see, on this Walcott machine, your Honor, the angle, the extreme angle through which that tool—I will use the word "tilt"—extreme tilt—it is only about 20 degrees, it isn't enough to have any measurable value if the tool travelled in the same path. Without any tilt at all it would do just as much of a job. If it were straight, an up and down, then, there wouldn't be any difference, because it would be simply slid up and down in the guide.

So, I say, there is nothing in common between the two movements **(1430)** except the accidental tilt which has no measurable value in the operation, but the tilt is there, as long as a roller is used for a rider, and so long as the tool is used in the contour of the rider by the simple expedient, that of pivoting it, which corresponds to the pivot on the master cam rider.

Q. Now, Mr. Brush, Mr. Gordon was pointing out to the Master that the fact that it is a common characteristic of these machines that the tool in doing most of its work, is working on the side, and not the point, or front edge of the tool. What significance has that, if any, to the operation of the machines insofar as the tilt of the tools is concerned?

A. None at all. Still the point of the tool, if the machine produced the right work piece, the point of the tool must trace the desired contour or profile. And, I will say this—that if these machines were to be used to do a cam profiling job by means of a shaving tool that was fed in radially, a tool that was straightened, wide enough to wipe the whole piece at the tilt, which Gordon sought to get, and the tilt which Walcott does get, regardless of how sharp the nose of the cam is, which Gordon could get with a sufficiently round-nosed cam, then that tilt would be of extreme importance. But, when you are cutting with the feed across the work, you are doing the major amount of stock-removing by the side of the tool, and the point of the tool is doing nothing but taking off the final shaving that gives you the precise contour.

The duty on the point of the tool is very light, but it has got to be there, and it has got to travel in the right path. So, as you saw in the Westinghouse machine, the angle of presentation **(1431)** of the work in properly ground work would vary as much as this Model A cam requires, and still do a job.

The Master: Do you consider that there is any theoretical impossibility in the Gordon machine cutting a sharp-nosed cam?

A. Yes, sir. Let us assume that the cam has zero radius, and that you have 80-degree swing around from one side to the other. That 80-degree swing would have to be done in zero time, and that is a theoretical impossibility.

Now, then, as the radius decreases, approaches the edge, you approach that theoretical impossibility. Whereas, if you take the Walcott machine—now, let us assume that we have there an absolute knife-edge cam, then your contact on the master roll will roll up there until it is tangent with that knife-edge, and your tool rises until it is tangent therewith. Then, the tool has its zero radius, and you come around there (demonstrating); until you start in on the other flank of the cam right from that knife-edge; and the Walcott machine has just as much time to go around there as could be possibly required.

The limitation of the Walcott movement is this: If the flank of the cam were concave and of the same radius as the riding roller, that is to say, if this roller had a surface

contact, why, then, the tool would have to be oscillated throughout that arc instantaneously, and that would be impossible. But so long as the cam being cut there is convex the Walcott machine is competent to follow any convex form.

Q. All of the cams manufactured by the defendant, as far as you know, are they convex or concave on that side? **(1432)** A. They are all convex, and as far as I know, and I do know, I am familiar with the engine production of the Ford Motor Company since the company was producing it.

The Master: Have they ever used concave cams on automobile cam shafts, to your knowledge?

A. Yes. But only with some of the older engines with roller riders. These cams which the Ford Motor Company uses are all what we call mushroom riders. That is to say, a substantially plain surface rests on the cam. It isn't quite proper to say "rests on," because the valve seats with a few thousandths clearances, but when we come on the active part of the cam, then this flat mushroom surface which I might represent by a flat disc like that (indicating) just rides up over the cam, and down.

Now, then, these must not be concave, or even straight, because if you had a straight surface it would come up and slip, and, then, again, you would have the prohibitive thing; you have a noisy valve mechanism.

The Master: What are the factors in the function of an automobile motor which determines whether or not the cam is to be designed with a sharp nose, or a rounded, blunt nose?

A. You make the cam smaller in size, for a given lift, by having the nose sharp, and the factor which determines that is whether or not you get wear between the nose of the cam and the rider. And, we found that a 1/32 inch radius is plenty, because the duty is light while it is on the nose of the cam. You see, the valve has accelerated upwards, and deceleration has begun to take place, so that the movement of the cam tends to reduce pressure, and with the modern lubrication and materials, **(1433)** the 1/32 inch is plenty. And if you want to increase that radius, you just simply have to make that cam larger, and that would increase the size and the cost.

Q. (By Mr. Farley): In that respect, do you happen to know whether the Ford Company's cam design differed in any way materially than those of other engine designers? A. Oh, yes. There was a time, and I think there are some designers yet, who avoid a sharpened nose as the Ford Company used, although that is a perfectly practical and feasible cam and works very well in service.

The Master: Well, the only advantage to a sharp-nosed cam is that you don't have to have a larger base angle?

A. Well, you can see, your Honor, if it is a larger base circle, I immediately begin to increase the size of the bearing, necessary, if I am going to have this here (indicating), increase the size of everything, increase the clearance, and it so happens that in the engine tests we swing these cams pretty close, and every effort is made to keep these as small as possible in order to keep your engine compact.

Q. (By Mr. Farley): Now, there has been some discussion of the amount of rake and clearance on the tools, and I am quite sure it is a subject about which the Master would like to have a little more information, and that is whether or not there is any particular limitation of—as a practical shop proposition—between the amount of rake which can be given to tools and make them an effective tool, from positive to negative, and vice versa. A. Well, I would say this—and, again, I will say, as the **(1434)** Westinghouse fixtures demonstrated, there is no pre-determined and sharply recognized line—when the work piece comes in—you can't have the bottom of the tool come here (indicating), through here (indicating), like this—you have got to have clearance below.

Q. That, of course, goes to clearance? A. That, of course, goes to clearance, yes.

Q. Yes. A. And, as to rake—the greater is the angle at the point of the tool, the more metal you have got to support, and if you are having a shaving tool feeding in, and if you put negative rake in there, you increase the angle of the cutting edge, but you would have a radial thrust that would be prohibitive. That would actually tear the work, and with tools that cut by radial feed, you daren't go to any length at all. It is preferable to have a little top rake.

Q. With top rake you mean positive? A. Yes.

The Master: And soft steel is the metal also in which the cam shaft is made?

A. Yes. You see, these cam shafts were made out of case hardened steel; after this operation we are discussing is done, that cam shaft is heated up to red heat, in a carbonizing atmosphere, and carbon is the common hardening element that is alloyed with iron to make what we call steel, or hardening steel. The surface of that absorbs carbon, and that becomes a higher carbon steel on the outside, which, when heated, becomes hardened on the outside, and still remaining soft **(1435)** steel on the inside. And that is the thing—perhaps you have heard some discussion about it. You dare not leave too much stock on these cams for two reasons—one, there was more to be ground off in the finish grinds; and, two, if too much was taken off, it might get into the soft interior. That is all there is to it.

Q. (By Mr. Farley): Insofar as the operation of the Gordon machine and the Walcott machine at the Ford plant are concerned, Mr. Brush, what proportionate increase of efficiency do you think would be attributable to the Walcott machine because of these differences that you have just discussed such as outlined in the claims of the Melling patent? A. Just 100 per cent.

The Master: Well, what do you mean?

A. I mean, the difference.

The Master: You don't mean you can make any mathematical computation?

A. No. What I mean is—I spoke in the vernacular—these differences in the movements are the things that make all the difference in the behaviour of the two machines on the same work piece. And, if I understood Mr. Farley's question, he was referring particularly to these differences as defined in the claims of the Melling patent.

Q. (By Mr. Farley): Now, the plaintiff here, Mr. Brush, has submitted a certain statement of account in which rather important figures, let me say, are contained, and those important figures are derived on the assumption that if the Ford Motor Company had not used, or had not acquired the number of Walcott, **(1436)** or a number of

Walcott machines that were held to be an infringement, the Ford Company would have been compelled to grind all of the tractor cams and all of the cams of the Model A engines by the use of Landis grinders. What do you have to say about that? A. Well, it just isn't true.

Q. And what do you base that statement on, Mr. Brush? A. Well, I base that statement on the fact that the Westinghouse practice was in existence before that commercially. The Westinghouse method had been proved; and, as I recall the record, had produced commercially, a very substantial number of cam shafts. The shaper method, which has been known from before my time, had been embodied for making the Model T shafts, and either, by modification of the work piece to suit the one-way cutting shaper or by modification of the shaper to cut in two directions, and a number of embodiments of the shaper process could have been used to make either tractor or Model A cam shafts, or both. And, as far as that is concerned, the Pioch machine is an embodiment of a method of profiling cam forms, which I myself have been familiar with, and have used since before there were—well, I will say prior to 1902, in tool making—not in mass production, your Honor, but the actual process of making a convex cam profile by means of a cutting plane on an end mill. We did that in automobile production in a small way on the Olds engine that we built. I have made and seen made, many cams for machine tools where we used that same method of using an end mill—an end surface of an end mill to shape the profile of the cam.

(1437) Now, we did that on old universal tool-room milling machines. We did not practice that method as efficiently, because we weren't after mass production, and had no reason to, as the Pioch machine, then, it was the same method.

I mean the fact that any convex profile can be generated, in any convex profile that can exist, can be generated by a flat-cutting surface. Now, what we did in the tool room—

The Master: (Interposing): Well, let us take a recess here. It has been quite a strain on the reporter.

Mr. Farley: I just have another question, your Honor.

The Master: All right. Read the last there, Mr. Reporter.

(The last part of the answer was read by the reporter.)

A. (Continuing): That is right. What we did in making cams in tool rooms was to make the cam contour that we wanted, computing the distance that this (indicating) had to be from the cam center, and make as many cuts as we wanted, indexing the cams to the position computed; cutting the distance computed and making the cam with a series of flats, and, any convex surface can be generated that way.

Your Honor has doubtless heard that a circle is a polygon with an infinite number of sides. But, we didn't make an infinite number. Now, the Pioch machine made an infinite number. That is to say, the flat surface was actually going to and from the center of rotation of the cam at the rate which the cam was supposed to move the rider later. See what I mean?

The Master: Yes.

A. The cutter simply moved as the cam tappet in the engine moves, operates a little further from the cam center, in order to **(1438)** leave stock for grinding, which is simply moving up and down.

And the problem of the Ford Company for adopting this method; his cam production was a rather interesting thing. That had to do with the number of cams on the old-carriaged Olds, where I had just two cams, single cylinder engines, I had no problem at all, but I just simply made up a face cutter, very much larger than that, and this Pioch cutter and roll it around the cam and made my cam. But, the Ford Company on this Model A cam shaft had just this problem. In order to generate a cam with a cutting surface, the cutting surface must lie the full length of the cam to be generated.

Now, any end mill cannot have that, or movement at the center. Consequently, there has to be a center of some radius which cannot cut.

You have got a cutting ring in place of a complete cutting surface. The biggest cutter used had to be small enough to go between the enlarged bearing and the next cam.

Now, I have made up this little celluloid disc to simulate the surface of the cutter, so that you could see what that was.

Now, if you roll this cam around under this (indicating), you see that part of the cam lies in the non-cutting center, and couldn't generate. So the problem was this: Move this (indicating) off to one side until you get a chord of this cutting surface which lies outside the center hole and still stays inside the perimeter.

Now, if you roll your cam around until you get on this acting face of the cam, this cutting chord moves out this way (indicating).

(1439) If I kept it right where I had it, then, don't you see, I couldn't generate all of the length of this element. So, it was necessary to move this (indicating), out so as to keep the element of the cam being generated always in the inside of the perimeter and outside the center hole.

So, those cams, those Model A cams, to be cut on the Pioch machine with a cutter of this diameter, the cutter must move sidewise, back and forth, with the rotation of the cam so as to keep the tangent, the point of tangency being generated outside the hole, and inside the perimeter.

Now, that was what I called an impractical job. They just had to find out what the movements sidewise of that cutter were that they had to incorporate in the machine in order that they would have a cutting surface that always swept the full length of the cam at the line of tangent.

Q. (By Mr. Farley): I take it, then, to be your opinion, Mr. Brush, that you consider the method of milling the cams as later employed by the Ford Company on the Pioch machines was an available method to the defendant at the time it began its manufacture of Model A cams in 1929? A. Absolutely, yes; because there was no new knowledge that came to mechanics between '24 and '39, that would have aided a mechanic to work out this little problem of side shift of an end mill any better today than they could in 1924.

The Master: Let us take a short recess at this point.

Mr. Farley: All right.

(Short recess.)

Mr. Farley: Shall we proceed?

(1440) The Master: Yes.

Q. (By Mr. Farley): Now, you discussed a number of things that were available to the Ford Company in 1929, we will say, and, also in 1924. I don't recall whether or not you considered that resume of the matter of the re-design, or slight changing in the shafts such as testified to by Mr. Pioch. A. I think I spoke of the methods that were available, the shaper methods, the Westinghouse method, the milling method.

Now, the re-designing of the work piece is merely another way to make the shaper method available for that work piece, instead of the re-design of it which embodies the shaper methods.

The Master: Do you know whether it is true that practically all the large automobile manufacturers outside of Ford were using grinding methods to rough machine the cams prior to the manufacturing of the Walcott and Gordon machines?

A. No, I don't know. In fact I know of at least one company, which is a matter of record, the Knox Company, which was a small company, used the other milling method.

You recall I spoke of the milling methods—plural—now, the other method is actually an adaptation of the old Blanchard form lathe, in which the profiling is done not by the flat face of the cutter, but a round.

The Master: The same type of milling?

A. What?

The Master: The same type of milling, type of milling machine used by the Ford Company?

A. That was still a third method. That method by Ford, that early **(1441)** method was what we call a form mill in which the contour of half the cam was made right in the mill, and, just milling the half cam. This method, the Knox Company used, would be the same as the Walcott machine. If you took this cam, 21, off, and this tool holder, 15, and put a cutter on in place of this transparent disc, of the same diameter as rider 26, then you do the same thing.

The Master: Do you know whether any of the motor companies in a period since from '25 to '35 used the grinder to accomplish the same purpose as Walcott did?

A. Yes, they did.

The Master: Can you name some of them?

A. I don't recall what companies, but I know that there was considerable rough grinding done.

The Master: Well, would you be familiar, for example, with the method being used by the Dodge Company?

A. I am not sure.

The Master: With the Nash or Studebaker?

A. I think Studebaker were rough grinding; I am not sure of that.

The Master: Or the various units of General Motors?

A. The one that came to my mind was the Knox Company, and I am not sure about the others, because I never came in contact with this roughing cam, roughing problem, in my consulting work from 1910 or '12, until this cam came up.

Q. (By Mr. Farley): You heard the testimony of Mr. Pioch and Mr. Herklotz, Mr. Brush, to the effect that after the Ford Company had adopted the Pioch machines on the Model A production, and then changed to the V-8 production, that those particular **(1442)** Pioch machines could no longer be used on the V-8 shaft? A. That is right. And I wouldn't need to hear any testimony to know that was the fact, either. It is necessarily a fact.

Q. But, that when the Ford Company did adopt the V-8 production they still used the Pioch machines? A. Why, of course.

Q. Now, do you think that that change of the shaft which occurred between the A production and the V-8 production and the rebuilding of Pioch machines to accommodate them to those shafts would in any ways be different had the Ford Company been confronted, when they made the change from Model T to Model A, with the neces-

sity to do the same thing as far as the Model T cam shaft shapers were concerned? A. Well, I thought I had already said that when the T cam shaft was discontinued and A cam shaft came in, that the shaper method, had the Ford Company wanted to use it at that time, was perfectly available, either by adapting the work piece itself, the one-direction cut of the shaper or by re-designing the shapers for two-direction cutting to suit the work piece as it is here physically before us.

Q. Just one other question, and that is in connection with this matter of rake and clearance of tools. A. Yes.

Q. What is the situation in that respect concerning the proper amount of rake and clearance to be used by the machinist in any particular job that he may have in the lathe? How is that usually handled? Is it a matter of scientific design, or is it something which the man on the job takes care of? **(1443)** A. The man on the job takes care of that himself, just as the man who makes the milling cutter; he decides whether his work is of a nature, whether he wants rake on the top of the tooth and the amount of clearance that he wants on the face of the tooth.

When a machinist uses a single tool or lathe, or shaper, the competent machinist just goes and grinds the tool, in his own judgment, and then, too, a competent mechanic that is good enough—

* * * * *

The Master: You spoke also about the angle of the top edge of the tool, I believe, to the work piece, or to a tangent to the surface of the work piece—

* * * * *

The Master: In a side cutting tool. Is that of any importance?

A. You can go far enough so it is. There isn't anything that is any great nicety.

I think, then, as I said, that the operability of the Westinghouse set-up shows that that angle of presentation can **(1444)** vary as widely as this model A cam shaft requires, and still be a perfectly operative tool.

Mr. Farley: You may cross examine.

Cross Examination by Mr. Michael.

Q. Mr. Brush, you expounded at great length here on the differences here between the Gordon and Melling machines; all to the point that the Gordon machine had no utility and the Melling machine was a very good machine, is that right? A. I don't think I made either of those statements. I did say regarding Gordon machines in answer to the Master's question, that with the cam point of zero radius, the intended action of the Gordon machine became impossible.

Q. Do you know of any instance where a cam of an automobile cam shaft had a zero radius? A. No.

Q. Have you said anything before the Master in your testimony as to the differences in these two machines, the Gordon and the Melling, that you didn't say before Judge Tuttle? A. I think, perhaps, before Judge Tuttle—I am speaking from memory now—that I may have been remiss in not pointing out—if I didn't, and I don't remember that I did—that the so-called angle of tilt in the Gordon machine was so small as to be of no measurable value; that is, the angle of tilt, *per se*; that is, the error of presentation of the tool would have been, if there had been no tilt present at all, the variation in angle of presentation would have been of no consequence.

(1445) Mr. Farley: You mean the Gordon?

A. Although, I am not sure that I pointed that out to his Honor, Judge Tuttle.

Mr. Farley: You mean the Gordon machine or the Walcott machine?

A. In the Walcott machine.

Q. (By Mr. Michael): But that is the only thing you recall now as possibly not having been disclosed to Judge Tuttle? A. Why, yes, I think so. I wouldn't want to be absolutely sure. I haven't read the record all over. But, I had the same knowledge and the same subject matter before me, and did my best to explain it to Judge Tuttle as I have done my best to explain it to the Master.

Q. And, on your direct examination, you remember using the claim 13 of the Melling patent? A. Yes.

Q. And pointing out that the features recited there spelled the difference between these two machines and

made the one 100 percent better than the other? A. No, I didn't say anything like that.

Q. Well, speaking in the vernacular? A. Speaking in the vernacular, no. I said that all the difference there was between the two machines were due to the differences defined in those claims.

Q. Well, you are aware that both Judge Tuttle and the Court of Appeals held that those differences were equivalent? A. No, I am not aware of that. I am aware that the Court of Appeals said, if I recall the opinion correctly, that both had **(1446)** the tilting of the tool, and that there was that in common; and, that, Gordon, if I recall, the language right, was the pioneer in simultaneous tilting the tool in synchronization with the work piece, and I very carefully, in my testimony, as you recall, said that there was that thing in common, that there was a tilting of both tools in both machines.

Q. In that respect, they were both equivalent. A. In that respect, they had a common mechanical likeness. No, I wouldn't say equivalent, because the tilting is very —but, they have that thing in common, that there is a highly technical likeness, but, nevertheless, it exists. They both tilt the tool.

Now, the Gordon tilt is for one purpose; the tilt in the Melling is quite accidental, not for that purpose at all.

And, if the rider, as I pointed out to his Honor, if the rider is a straight rider, in place of a round one, carrying out the methods, the tilt would disappear.

Q. Well, let me put it this way: if the Court of Appeals did say that those two tilting movements were the equivalent movements in these two machines, you disagree with them? A. It would depend on how they defined it.

Q. Well, can't you just answer my question? A. No. Because equivalent, equivalency is too loose a term, not to be ambiguous. It is a fact that the intended tilt of the Gordon machine, which can be realized on a sufficiently round-nosed cam, and the accidental tilt on the Melling machine, both do maintain the same presentation angle of the two. In that sense they are equivalent.

(1447) Q. Now, you spoke of a number of machines here as being available to Ford in 1924? A. No, I think you are mis-quoting me. I said the number of methods

available within the skill of skilled tool and tool fixtures designers to embody.

Q. Well, what are we to understand? That Ford could have had a Pioch machine in 1924? A. In my judgment, yes. That there was no new knowledge that had come into the mechanical arts between 1924 and the day of the designing of the Pioch machine.

Q. And the knowledge that you speak of and from which you say that the Pioch machine was derived, you first knew of as early as 1902, I understood you to say? A. No, that isn't quite correct, either. I said the knowledge of the method. Now, the method is one thing; the method is one thing, and the embodiment is another. And, what I did say was that the methods were old. The problems of embodiment were just what I outlined to his Honor, and they involved nothing insofar as I could see, new or novel in the mechanical art.

It was just a matter of finding out how to move, how to best move a cutter of that size so as to keep the line of tangency outside of the center clearance hole and inside of the outer perimeter.

Q. Well, the milling method from which the Pioch machine was derived was known to you as early as when? A. Oh, 1902.

Q. Well, now, how long after that would it have been a designer's choice to embody that method in a machine such as the Pioch **(1448)** machine? A. I would say that that would not be so much a matter of whether it was a designer's choice, or not, but, as to whether or not, there was at any time a volume of work pieces, which management were willing to spend that much money on, for so highly specialized a machine.

Don't you see what I mean? These machines like the Pioch machines, like the shaper, practically without utility, except for that identical work piece of one, that is almost identical.

Now, to make it expedient to build machines as highly specialized as that, there must be assurance that there are going to be enough work pieces so that when the cost of machines is distributed over the entire volume of work pieces, it doesn't raise the cost of each work piece. With smaller production, an effort to specialize to that extent, would break an automobile company.

You must remember that the Ford Model T over a period of 16 or 17 years, 15,000,000 were built with not a major design changed. Now, then, that meant that a thing could be done in the way of a special machine for that model; that if the Packard, if they tried to duplicate for the higher priced model, would have just ruined the company.

Now, that is the situation in the industry which limits are to a large extent, the use of old methods of highly specialized machines and shafts.

Q. Well, how was automobile production sufficient to justify that such as the Pioch machine? A. Not until the introduction of the Model T Ford. There was never (1449) in this country large enough production to begin to justify it.

Q. That was? A. That was '06, '07, '08; I don't recall. That is a matter of record. I don't recall.

Q. Well, let us say 1910. Then, it is your testimony that the designer would have or could have availed himself of the Pioch machine in 1910? A. Now, let us put it this way: That had the Ford Company at the date when they originated the shaper, had they said, "Let us work on the milling method in place of the shaper,"—both are old methods—I think the Pioch machine would have been certainly originated, because it is just a choice of method; because such a shaper method is a little more elastic than the milling cutter method. I mean I can make a wider variety of cam profile with that.

Q. Do you know how many Ford made on the shaper? A. No, I don't.

Q. Would it also be true that the Pioch machine would have been available to any other automobile company in 1910? A. Why, I would say no. Because I don't know of anything, don't know of anybody who had volume enough to justify that much expense for one operation.

Q. Well, let us come up to 1920? A. Oh, the only production that I recall that was comparable to the T, wasn't until the Chevrolet got into active production. Chevrolet, sometime before the abandonment of the T, I think might have had production enough so that if they had asked their tool designers to see what they could do with the old milling (1450) method, I think they might

have gotten a Pioch machine, had the management chosen to ask that that method be investigated.

Q. I see. Now, how about the Oberhoffken design? Would that have been—I understood you to say that that was available to Ford in 1924? A. The Oberhoffken design of shaper?

Q. Yes. A. He designed the shaper originally. At least that is my—

Q. (Interposing): No. I mean this new design, 268 and 269. A. Oh. Well, I said in this sense, that if you have this work piece and a record of the one-way cutting shaper, to my mind it is perfectly obvious, that the way to handle that work piece by the shaper method is to cut in two directions.

Q. Well, is it your testimony that this design shaper, Exhibits 268 and 269, was available to Ford in 1924? A. Potentially, yes. Now, please don't ask a question that way. This is not a design of shaper. This is, as you recall my testimony, is a couple of illustrative sketches to illustrate Mr. Oberhoffken's concept, or an adaptation of the shaper to that work piece. Now, it isn't a design of a shaper. It is—those are just illustrative sketches.

Q. Well, I thought you said on your direct testimony that that is something that could have been available to Ford? A. Yes, quite.

Q. In 1924? A. Yes, I am perfectly sure that anybody that was capable of designing that shaper originally, might have done what is illustrated in those sketches, might have built the reverse-cutting of the (1451) two tools that interfered as shown by the attachment, might have modified the shaper.

I think I said it a half a dozen ways. I am not sure—I can't outline six, but I think I could—that there were a number of ways in which the one-way cutting shaper which was used on the Model T shaft as an embodiment of a shaper profile for mass production, there are a considerable number of ways in which that shaper method could have been embodied, and alternative machines would have handled the Model A work piece.

Q. And all those ways, regardless of number, would have been available to Ford in 1924? A. I think so.

Q. And how about 1920? A. I think so. Any time after the shaper had proven itself.

Q. I see. A. That the original shaper had proven itself a production machine; I should say that if you had a different work piece any competent tool designer could adapt the method with that experience available.

Q. Then if the shaper was a proven tool in 1915, these modifications in new machines that you have been talking about here, would all have been available any time after that to Ford? A. I think so.

Q. And any other automobile company? A. Well, I want to say "available"—I want to keep in mind—I don't want the inference in my answer to be that those things are available unless, or, until there is sufficient production to justify the cost.

(1452) In that sense a low-production plant does not have things available that a high production plant has. Don't you see? Don't you see what I mean?

Q. Well, it would be available to them if they wanted to use them, as I understand the testimony? A. Well, if they were prepared to put the cost into a special machine, yes.

Q. And, as applied to Ford, that would be the case, or was the case, according to your testimony? A. What?

Q. He had the production? A. Ford had.

Q. And the money, evidently, to reduce costs, so that all of these shapers, all of these shaper methods would have been available to him? A. Yes, the Ford had.

Q. After 1920? A. Yes, I think so.

Q. And, that would also apply to this attachment here? A. Yes, sir.

Q. Don't you think you could bring in at least 10 or a dozen men, different engineers, to sit down here and make different drawings? A. I said that I thought there would be no difficulty in finding a half dozen.

Q. Well, you said you alone? A. What?

Q. Well, you said you alone had thought of a half a dozen? **(1453)** A. No, I didn't. I said I was perfectly sure that there would be a half dozen modifications and practical.

Q. And, that would all have been available after 1915? A. Yes, I think so.

Q. Do you know the way Ford makes cam shafts now? A. Yes.

Q. Would that have been available to him in 1915? A. You are asking me for a knowledge of metallurgical progress that I am not sure about. It is a matter of getting castings of proper physical characteristics. Now, whether the casting art had progressed far enough—I think not—but, I wouldn't be sure about that.

Q. You haven't any knowledge as to that? A. What?

Q. You haven't any knowledge as to that? A. No.

Q. Well, Mr. Brush, it isn't your testimony here that these actual machines that you have been talking about, and that have just been drawn up or sketched up in the last hour here were available to Ford in 1924? A. Now, what?

Q. What you are saying is that Ford could have put some engineers and designers on those problems and developed something like this in 1924? A. Just as he did the original one-way cutting shaper.

Q. Yes? A. Quite so.

Q. And, after he got that, he would have gotten, too, any other **(1454)** shaper that any engineer, 20 years hence, might design? A. No, I don't think I said that. I think I said that in my judgment, that after the shaper had proven itself, it was then the skill of the then existing machine tool designer to embody that, and, if they wanted to use a one-way cutting shaper to modify the work piece so that it could be done with the one-way shaper. I didn't make any predictions as to what might appear 20 years hence, as I recall.

Q. Well, that is where we are, aren't we, 20 years hence from then? A. Oh, I thought you meant from today.

Q. No. If all the automobile companies outside of Ford were rough grinding cams up to the twenties, what conclusion would you come to from that, in view of your testimony here? A. Come to the conclusion that they were not availing themselves of the skill in the art that they might have used, as often happens, that an industry will do something because they can get a ready-made machine, and they will do something that is usually way below the efficiency that they could have if they would use a little more initiative. I have seen that happen so many times that that does happen.

Q. When was this Knox machine used that you spoke of? A. I don't recall the date of that. It is in the record of the case.

Q. Back around 1910, wasn't it? A. I think so.

Q. But not since then? A. No, that is the other method of milling, and does not lend itself; not because the method isn't good, but doesn't lend **(1455)** itself to the close-packed multiple location of the cam. That is another old method of profile. You can readily see the mark of defect itself, that if you try to lay axles parallel to cam shafts, drive the cutter, that you can't pack them in close together. The method is a good one.

Q. Did you ever see a shaper operate, Mr. Brush? A. Did I ever what?

Q. Did you ever see a shaper operate, Mr. Brush? A. Did I ever see a shaper operate?

Q. One of the old Ford shapers? A. No. Well, I may have. I don't recall. I have been in the Ford plant, and I may have seen them in operation. I wouldn't say that I had any definite recollection of it.

Q. Do you know of your own personal knowledge whether Ford ever straightened the cam shaft just before putting it in a milling machine? A. Well, if you are asking me if I know by observing—no.

Q. Well, let us get into this straightening a little bit. I didn't quite understand your testimony on direct. I would like to get that clear. First of all, I understood you to say that the Walcott steady rest was just one roller in contact with the work. A. No. Two.

Q. Can you make a sketch of the Walcott steady rest, as you understand it? A. Yes. Well, let us suppose we are considering a Model A shaft such as was turned out there, center bearing and cutting tool on the right-hand side, and a roll down underneath the work, **(1456)** and then a removable roll up above it. Call that center bearing.

Q. You are sure there weren't three rollers, two below and one on top? A. I think not. I don't know that I ever gave it particular study; no. No. My recollection is that there were only two on that particular machine.

Q. Well, if there were three would it hold the work better? A. Oh, yes. Yes, if you take three points, then you can hold the work in all directions.

Q. And would there be any occasion for straightening the shaft before you put it into the machine with a steady rest like that? A. Not within much wider limits

than the two-point steady rests, the two-point steady rests, that will refract all the work, but three-point steady rest will take the body out.

Q. So that there would be no occasion to straighten it if there were three rollers in the steady rest? A. No, if the three rollers were spaced so that you have a reasonable stand.

The Master: You mean that all of your testimony as to the necessity of straightening applies only to a steady rest with two rollers?

A. That is right.

The Master: And is not applicable where there are three rollers?

A. That is right.

The Master: It would be a simple matter to provide three rollers where a steady rest is a lathe, wouldn't it?

(1457) A. Yes, rather, provided the structure of the lathe is such as you are loading and unloading, and wouldn't give you any difficulty.

The Master: Well, isn't it quite common to have three rollers in a lathe?

A. Oh, yes.

Q. (By Mr. Michael): And that was common in, oh, as early as 1910, wasn't it? A. Yes.

Q. The answer was yes? A. Yes. With the straight work piece, though, the two-roller steady rest does quite a nice job. I mean, all you need is to keep your work piece so that it isn't bowed. Now, when I said straight, I want to be sure that you don't misunderstand me, that I mean, I am speaking of, about a general bow.

The Master: Yes.

A. And, if that is taken off of a work piece, your two-roller steady rest does a very nice job.

Q. (By Mr. Michael): Mr. Brush, this is, as I understand it, the Ford tractor shaft? A. That is right.

Q. Exhibit 35? A. Yes.

Q. Do you think it would have been available to Ford in 1919 or 1920, to make a revision in these bearings, the

same as you have proposed now in connection with the tool production? A. Do what?

Q. Change the length of the bearing? **(1458)** A. You mean reduce the length?

Q. And use the old shaper? A. Well, this bearing would have to be made removable. This is long enough to have been shortened. Shorten this one on this end (indicating).

The Master: Referring to the center bearing.

A. Yes, referring to the center bearing; get clearance to enter there and cut toward this (indicating), and make this (indicating) removable.

Q. Well, suppose we turn it around like this and shorten this end bearing (indicating)? A. Well, not so good. This end (indicating) has got the load. The proper one to shorten is the center. And, the proper one to make removable is the end one, here (indicating).

Q. Now, let us get away from the removable business. I am asking about shortening the center one and increasing the diameter of them, to make up for the reduction of length? A. Well, as far as center bearing is concerned, there wouldn't be any necessity for increasing the length of it, because that is a pretty stiff shaft, and, if you will recall, I told his Honor your cam tappets don't press on the base circle, and that means that the most load you could have from your tappets is the let-go of one of these, and the pick-up of the other, adjacent to it. That bearing, because of the design of the engine, has a more area than necessary.

The Master: That is the center bearing?

A. What?

The Master: That is the center bearing?

(1459) A. Yes, that is the center bearing.

Q. (By Mr. Michael): What about this end bearing? A. Well, this is a little bit different. You have got the time gears on there, and sometimes they put auxiliary drives on those gears. Still, I think, that is large enough so that it could have been shortened substantially. But the better way to follow would be to follow this center bearing on the Ford and make the rear one removable.

That would be the much simpler way to alter the work piece, to adapt it to the one-way shaping.

The Master: What about the effect of leaving the bearings the same length, and lengthening the shaft and using the increased length to make the recessed portion longer?

A. Oh, that means a little more change in the design of the motor, because this bearing is short. Usually because your motor crank-case design changes and is pretty close to that, and it would mean some more change of the design in the crank case, and so that is the reason I didn't suggest that, because that—I suggested those things which could be done wholly to the cam shaft.

The Master: Is there a removable bearing as durable and will stand up as well?

A. When I say removable bearing, I just mean a ring like this piece here (indicating). That would be just as good as that, and, of course, the Model T, if you want to use split bearing, this length here in between here (indicating), if you took that out and followed this practice it would be perfectly feasible.

Q. (By Mr. Michael): Well, to have a separate bearing, you would have to go through all the operations of making the bearings **(1460)** and— A. (Interrupting): Oh, no.

Q. (Continuing): —the additional operation of putting it on? A. No, you just simply grind the end of the shaft circular down there (indicating). It is below the base circle of the cam. Take this little button of steel, soft on the inside and hard on the outside, and when it is down, shove it over.

Q. Where did you get the little button? A. Drop it off.

Q. Yes, but you would have to make it? A. Yes, but we would have to make it.

Q. And you would have to put it on the extra operation? A. Yes.

Q. Now, here is Exhibit 238, and I think you testified you were going to reduce the center bearing and the end bearing? A. No. What I said, as far as I said anything about it, would be that this bearing is a long enough bearing.

Mr. Farley: That is the center bearing.

The Master: That is the center bearing.

A. That is the center bearing, yes. This wouldn't need any attention. Again, this would have to be a removable bushing.

The Master: Mr. Brush, are you referring to the bearing specifically by center bearing?

A. Yes; shorten the front end of the center bearing and make the rear end bearing removable.

Q. (By Mr. Michael): And, then, your testimony is that it would be dangerous to tamper with the length or size of the other end bearings? **(1461)** A. Oh, on the—I wouldn't say dangerous, but it might involve, depending on the design of the front end of the engine, it might involve more engine design changes. I am speaking of something that where it does not involve any material changes, where the changes are all on, or in the cam shaft.

Q. But, as an automobile engineer and consultant, therefore, you would say it would be feasible to shorten up the center bearing and make the short end bearing? A. Rear end bearing.

Q. Rear end bearing? A. Yes.

Q. And have this pressed here (indicating)? A. Yes.

Q. And, but it would be bad practice to tamper with the other? A. Well, I won't say one or the other, but there may be, there may be details in the engine design, or there may be a load for various reasons on the front bearing, that would make it indispensable, unless you were prepared to increase its diameter substantially.

The Master: Incidentally, when did Fordson tractor production start? Do we have that on the record?

Mr. Farley: I don't believe we have that on the record. I think it started, I think it was just around about 1917 or 1918, I think it was just at the end of the War. We can very readily get those figures, and it may be in the record down below. I will see if I can find it.

Mr. Michael: Well, in the record below, it goes back as far as 1919. It would be interesting to have the exact date.

(1462) The Master: We ought to have the date there, in view of this witness' testimony, at least.

Mr. Spohn: You mean production of cam shafts for those years?

Mr. Michael: For tractor.

The Master: You wouldn't have to get it as accurately as during the infringing period; but get the production of what they were for the first six or seven years.

Mr. Farley: It never exceeded 500 shafts a day during the first part, or up to the time they brought these machines up. That is my present information.

Mr. Michael: That is all of the examination I have.

RE-DIRECT EXAMINATION by Mr. Farley.

Q. Mr. Michael was questioning you concerning as to whether or not everything you had said here this morning, you hadn't said in the trial before Judge Tuttle.

The Master: That was everything, I think, with reference to the distinctions between the Walcott and the Gordon machines.

Mr. Farley: Distinction between the Walcott and the Gordon machines, yes.

Q. (By Mr. Farley): And, do you remember, Mr. Brush, that the Melling patent was not in evidence before Judge Tuttle? A. That is my recollection.

Q. And do you remember whether or not you were asked any question concerning claims in the Melling patent? A. Certainly not.

Mr. Michael: Oh, I don't think I had even intimated that **(1463)** he had said anything about that before Judge Tuttle.

Mr. Farley: I see.

Q. (By Mr. Farley): And, you did not, then, before Judge Tuttle, point out that the distinctions which you spoke of here today were the very distinctions outlined in the claims of the Melling patent? A. Of course. I couldn't.

Q. On the questions of Mr. Michael, concerning the change of the large bearings, which, I understand, are these, are the front or the rear bearings? A. Front. Those are the front, front end bearings.

Q. You are not as familiar with the mechanism in the Model A as Mr. Pioch? A. No.

Q. And you wouldn't in any way contradict Mr. Pioch's testimony about the feasibility of the shortening? A. No. I think I said that I would not care to make a statement as to whether or not the engine construction was such as to permit that. I wasn't sure. The center bearing could be shortened, and the rear end bearings could be made removable.

Q. Now, there is one other point in connection with the model, Fordson shaft, the F-446 shaft, Exhibit 35. Now, in comparing the Model T shaft with the Model A shaft, on your direct examination, you drew attention to the fact that the spacing of the cams in those two shafts, longitudinally, were substantially identical, and that the width of the cams was substantially identical? A. That is right.

(1464) Q. And you stated that with the slight change in the bearings, that because of that identical spacing, the Model T cam shaper could have been used without any redesigning of the shaper, except, substitution of the master cams, and the means for gripping the shaft? A. That is right.

Q. Now, what would be the situation with respect to the Fordson shaft, Mr. Brush? Could you take the very machine that had been designed and used by the Ford Company from 1914 up to the time of the acquisition of the Melling machines to shape the cams of the Fordson shaft? A. No.

Q. And what would it be necessary to do? A. Well, take that one thing—the cams on the Fordson are a matter of practically a quarter of an inch longer stroke. Now, that shaper was constructed with, as I said, with a regular crank shaper movement, with a swinging Scotch yoke, which was that whole reciprocating mechanism was designed around the proper stroke for that cam. You see, you can't lengthen that stroke 25 percent in a machine as highly specialized as that, without pretty much rebuilding the machine.

Q. Now, comparing the over-all length of the two shafts? A. As to whether the reciprocating carriage had span enough so that proper mounting of that larger shaft could be done, I think not. That, as I told your Honor, that shaper was a very highly specialized machine, built

around the doing of one operation on one work piece, and there was very, very little latitude.

Q. And if the Ford Company had wished to use a shaper on the tractor **(1465)** cam shaft, it would then have been necessary to rebuild and redesign the machine in the same way as they did with the Pioch machine, with that shaft from Model A to V-8 production? A. Certainly.

Q. Now, assume the Fordson production was only 500 shafts a day, would you think a production of that size would warrant the building of a special machine of that type? A. No. And, especially on the production of a tractor where your market is necessarily more limited.

The Master: Well, with what other methods are you comparing the shaper now? Do you mean it would be uneconomical to use the shaper as contrasted with the Walcott or Gordon machines, or as contrasted with the rough grinding or both?

A. Well, I think it would be uneconomical to use the shaper on that shaft, even as compared with the old form milling.

I wouldn't say without checking the figures—yes, I will, too. I don't think that the production that you had on the Fordson tractor would justify the Pioch machines or the shaper.

The Master: Roughly what size production do you think would be necessary to warrant the development or manufacture of a shaper machine, particularly designed for a tractor?

A. I think, perhaps, your Honor, what is more to the point than my own opinion is the fact that the Ford production has topped a million a year for a good many years, and has run right around there. I mean has topped a million a year for a number of years, and has run right around there for quite a number of years. And, when you get up to half a million or a million cars a year, the spread of the whole production is you can go far, and covering the development of 500 a day wouldn't be; if they **(1466)** were reasonably reassured over a number of years, then, I would say yes, it would. I don't think it would be justified until the tractor market had been proven, which the events proved it didn't prove. You see, the production of the trac-

tors was abandoned entirely, although it was a good little machine, there just wasn't the market.

Mr. Farley: Now, I might state, if the Court please, that I don't have any production figures for the tractor for these years prior to the acquisition of the Walcott machines, because, as far as our statements of account were concerned, those are the records in the accounting period that I asked Mr. Woehrle to get the exact figures. However, I will have those figures compiled and present them later. That is, the date of the beginning of the tractors, and whatever the tractor production might have been up until the date of the acquisition of the Walcott machines.

The Master: May I ask this?

Mr. Farley: Yes.

The Master: You said that the Walcott machine was more, was a more applicable type of machine than the Westinghouse or the shaper, for cutting cams on the cam shaft.

A. For variations of the work piece.

The Master: For variations of the work piece?

A. Yes.

The Master: So, would it be your conclusion, then, that the Walcott machines, or the purchase and use of the Walcott machines by the Ford Motor Company to rough shaping the tractor cam shaft, might be justified on a much smaller production than **(1467)** would the manufacture and use of a shaper or a machine of the Westinghouse type?

A. Yes.

The Master: Do you think, to go one step further, that the use of the Walcott machine and of the grinding machine for rough-shaping the cams would be approximately equivalent in that respect that where, for example, you got a production sufficient to use a grinding machine, you could also use, economically use, the Walcott machine?

A. I rather think so. I think the Walcott machine has some adherent due largely to that account, that the

design of the production can be widely changed, and still use the same machines, or substantially the same machines. It is adaptable for a considerable range of the work piece design.

Mr. Farley: I wonder if your Honor understands the particular properties of the Walcott machine in that respect, that is, which gives it a bit more adaptability?

The Master: Not 100 percent. I wish you would point that out.

Q. (By Mr. Farley): Well, I think you might do that, Mr. Brush.

The Master: Yes.

A. Well, let us take this model. Now, just say this is a unit here on the cam shaft, and I have got another unit like it, that I can set any distance I want between cams. These units are made thin enough so that I can set a unit for, let us say, this cam on the tractor cam shaft, and another unit for this one (indicating), and another unit for this one (indicating), and if I want to design a work piece for a new model of tractor **(1468)** engine, or where that is a quarter or three-eighths inch further apart, then, I will just set my unit further apart on the machine. The machine is built up of duplications of these units.

The Master: I was wondering why that wouldn't be true of the Westinghouse machine?

A. Well, if you are going to get the benefit out of that, you have got to build that machine pretty solid.

Q. (By Mr. Farley): Suppose you refer to that base-piece. A. The method here is a master cam on the back. This again, like the Walcott, in that respect, the cam holds the tool out of the work piece, and the spring sets it in. And, take these (indicating), move under the load of the cut, you have got to have a pretty good spring there, and you have got to have a pretty rigid mechanism. This would be more adaptable to variations than the shaper or the Melling machines. It would be intermediate, in my judgment, it would be intermediate between the two. I would say the most adaptable machines for cam shaft turning of usable machines is Melling; Westinghouse would come next, because, in my judgment, this will be somewhat less

adaptable than the Melling, if you get the rigidity built into it. And, still less adaptable would be the shaper and the milling machine.

Q. I don't know whether you brought out, Mr. Brush, I was interrupting there, for a minute, the fact that in the Melling machine these riders and cams, rather, cam 26 and 21, are mounted along a shaft, and can be spaced to a different spacing? A. Well, I took it for granted that that was understood.

Mr. Farley: You understand that particular proposition, your Honor, that having two shafts in the machine, one is for **(1469)** carrying all of the cams, 21 and another, for carrying all of the cams, 26, it is just a matter of sliding these particular things along as long as there is room enough in the cams to get them in?

A. That is right.

The Master: Yes.

A. Now, if your Honor is going to get the benefit of a machine that is rigid enough to push production, to crowd your feed, and to take a half cut, you begin to make this one piece, to make each one of these Westinghouse tools and master cams a unit, such as the Walcott is. Well, then, you destroy the ability to make this thing rigid if you make it all in one piece.

The Master: I was just noticing, I was just noting from an exhibit in evidence in this case, defendant's statement of account, Exhibit A, and Exhibit 4, attached thereto, motor production of Model T tractor as given the highest tractor production in the period through August, 1927, to—no, wait—this would be through—well, rather, through the entire accounting period, was about 11,000 in one month. That would be less than 500 a day. With that figure in mind as the maximum tractor production, would you think that at any time during the accounting period, it would have been feasible to, would have been feasible for the Ford Motor Company to have had shapers constructed to rough machine, or rough shape the cams in the cam shafts?

A. No. I think, your Honor, with that situation, the probability would be that if the Melling machine hadn't supposedly been available, my own judgment is that they would have gone back to **(1470)** the form milling that they used on the Model T before the shaper. It is a fairly efficient method.

The Master: Well, are you familiar with the fact that the Ford Motor Company was using the grinding method for rough shaping the cams on the tractors until the Gordon and Walcott machines came along.

A. I should expect that they would do that; those machines being available until they settled on some production method if tractor production justified it. I mean, the rough grinding machines, the rough grinding machine is a machine that could be gotten instantly on the market, and, while production is slow, and those grinds may be used for a wide variety of uses there.

They are not strictly limited to cam shaft grinders. The set-up on a rough grinder would be a natural one in initiating the production, and if the product promised to have a high volume for enough, have a high volume, then, I should say that any live organization would look for the more efficient method of producing that, because there were savings to be made. But, if I were initiating that—

The Master: (Interposing): Well, are these machines available on the market readily?

A. No. They would either build a milling machine or build a special fixture for some heavy standard milling machine. Those are questions of compromise, and, your Honor, to ask my opinion, I have given it freely.

The Master: Yes.

A. I don't pretend to say that management would agree precisely **(1471)** with me on my estimates, or that I would agree with myself, if I had all the figures of the problem available.

The Master: Well, from everything you know of the situation, would you summarize your conclusions broadly by stating that it is your opinion that the Walcott machine was relatively much more beneficial to the Ford Company in the production as used on the

tractor cam shafts than on the Model A and on the Model T cam shafts?

A. In view of the smaller production and the uncertainty of the market, in view of those two things, I should say, frankly, yes, your Honor.

* * * * *

RE-CROSS EXAMINATION by Mr. Michael.

Q. Do you know how many grinders it would take to turn out the production of one shaper? A. No, I have never checked that.

Q. Have you any idea? A. No. I will have to take the time check of the grinder. That would again, that would depend on some other factors, but, oh, I should say that a shaper ought to be, well, if you guess—let us say, three times as good a producer as a single-wheel grinder; maybe four times; I am not sure.

Q. Well, suppose the production of the tractor shafts was high enough to warrant, or how high a production would you say would—where would you draw the line with reference to the number of **(1472)** grinders? A. Well, I will make a guess, if you want to, but it is too hypothetical. There is always some grinding to be done about a shop.

Q. Well, when they put a grinder on a job like this, they are not available for anything else? A. That is it. Now, then, give a volume of production, and a belief in the continuity of production, you see, it is a matter of arithmetic because you have got to calculate the cost of the grinder, cost of the special machine designed, and I just don't know how to answer a question as hypothetical as that, without making an actual time study on a number of assumed factors—let's see—I think I can answer your question in substance. You have got to have enough spread of a special machine so that you can write it off against the product and still save money.

Q. Well, suppose one shaper would have turned out their entire production of Fordson tractor cam shafts and as against that, they had to buy three grinders; now, which would they be likely to do? A. Well, I think at that, if I were, I would be tempted to buy the grinders, unless I could assume that my production was going to mount and

be permanent. Now, if I was going into the tractor business, I don't think I would be enthusiastic enough about a sustained market of the tractors to build very many highly specialized machines. I have seen too many changes in tractor design. I have been in that business as a consultant to some extent, and I wouldn't, personally, be **(1473)** enthusiastic enough about the tractor market to go very far on expending money on highly specialized machines.

Q. You wouldn't compare the changes necessary in the shaper to turn the tractor shaft, with the designing of the Pioch machine, would you? A. I wouldn't what?

Q. Compare the two, or think they were comparable, the change in the shaper from the model to the tractor shaft, to a designing and a building of a Pioch machine, the first Pioch machine? A. Give me that, Mr. Reporter. Perhaps I am not hearing, but I don't get any sensible meaning out of the question. What was it?

(The question was then read by the reporter.)

Mr. Michael: Well, just cut it all out.

Mr. Farley: I didn't think your question was clear myself.

The Master: I didn't understand that either.

Q. (By Mr. Michael): I thought I understood you to say on your re-direct examination, that to change the shaper as they were used on the Model T's over to this Model F job, the F shaft job would be just the same kind of an undertaking and design as it was to build the first Pioch machine? A. No, I don't think I said that at all.

Q. Well, that is what I understood you to say. A. What I intended to say, and I think I did, that if you take the Model T shaft, and, then, take the Model A shaft, those shafts being of substantially identical length, substantially of an identical spacing, and substantially of identical cam face, that the design of the Model A shaft could readily have been altered enough so that it could be done in the actual Model T **(1474)** shaper.

Q. What would have been involved in changing the shaper to do that? A. In the change—what would be involved in the shaper?

Q. Yes? A. Itself?

Q. Yes. A. Well, you would have to have a new master cam for the cam form.

Q. Yes. A. You would have to have different holding chucks for the end.

Q. Yes. A. You would have to have a different center steady rest under the center bearing.

Q. Yes. And, you would have to re-space your tools, wouldn't you? A. No. Because the spacing and the length—

Q. (Interposing): Well, just— A. All right. I don't think there is difference enough there to.

Q. Well, there is a little difference? A. Well, there is a little difference.

Q. Quite a bit. When you get down here, they are off a quarter of an inch, anyway? A. I think not.

The Master: Isn't there some testimony in the record on that?

Mr. Michael: This isn't back here (indicating). There (indicating).

Mr. Farley: Well, suppose you split your differences there.

(1475) Q. (By Mr. Michael): Every cam is out of line a little bit, isn't that true? A. Yes, but those aren't out enough so that you could take care of that in making a special tool, making special tool bits. You might have to use special tool bits in the tool holder.

Q. Oh, you would have to re-space your tools? A. Or what?

Q. Or, you would have to re-space your tools? A. That would be one way of re-spacing your tools. It isn't sufficient. I am quite sure that you would have to change the tool slides. You would have, you could take care of that in the length there.

Q. What would you have to do to adapt the shaper to the F; that wouldn't be involved here, assuming that you put pressed bearings on the end, and all that sort of thing? A. Well, I spoke of that somewhat. Now, there is a cam, each cam is a quarter of an inch longer.

Q. Yes. A. That, in my judgment, would be outside of the range of the reciprocating mechanism of the shaper, and the shaft itself—

Q. (Interposing): Is longer? A. Is longer. Is enough longer so that I think that would be outside the best range of the modifying of the holding of the shaft.

Q. Well, you don't know that, do you? A. Well, I am expressing an opinion, and I am perfectly sure that there is no question that your spacing of your tool slide would be absolutely out of the question. In other words, for the **(1476)** tractor cam shaft it would have meant the construction of a complete new physical shaper to adapt the shaper method.

Q. It wouldn't mean the adding of any new parts, would it? It meant merely the re-spacing of what you had already had in that machine? A. Well, if I had a piece of cast iron a foot long, and I needed one 18 inches long, there is a complete new piece of casting.

Q. Well, it isn't a matter of serious design; nothing that would hold designers up? A. No, of course not. But I mean it would mean patterns and machining, by the making of a complete new machine, that, at substantially more cost, than, so long as your patterns were in existence, of repeating one of the old shapers. It means you have to have a complete set of drawings to build a machine, even though the method and its embodiment were identical.

Q. You don't think you could use any of the patterns for the old shapers? A. No.

Q. Even the bed plates and the base, and all that? A. No.

Q. Now, when Mr. Farley asked you about claim 13 and whether or not you had read that to Judge Tuttle, you mean that you didn't point out everything set forth in claim 13. As a matter of fact, you did, didn't you? A. Oh, quite. I couldn't tell Judge Tuttle, without knowing about Melling patent that there has been allowed to Melling, a patent which claims, which defined precisely the differences between the Melling and the Gordon machine, that were responsible for the difference in performance, in production between **(1477)** the Gordon and the Melling machines.

Mr. Michael: That is all.

The Master: Where these rough grinders for rough grinding the cams—if their use is discontinued for some reason, because of substitution of new machine, for example, or a type of machine, such as the Walcott machine, could that be easily adaptable to other uses around the plant?

A. Yes.

The Master: What are some of the other uses?

A. Well, take the making of machines, that is, such as the Pioch machines, you have got spindles and sleeves, that you want to finish circular things, that you want to grind circular, those grinders are readily adaptable back to a straight circular grinding work, and if they haven't been abused in their grinding they are just as good for any grinding.

The Master: If the company were going to buy a new grinder would they buy a substantially different sort of grinder than the rough grind used for grinding cams?

A. Well, they might, but, I mean if they had grinders that had been used for grinding, then, those grinders could have been adapted for other uses without throwing the machine away.

Mr. Michael: Well, only by adapting that without changing the cam or the other.

The Witness: Oh, certainly.

Mr. Michael: Certainly.

Mr. Farley: In view of the questions just asked Mr. Brush—if you would take the tractor cam shaft, Defendant's Exhibit 35, and just match it up against this wooden model, of the Model T cam shaper, as far as the size of the bed is concerned,—

(1478) The Master: (Interposing): Just come back here, Mr. Reporter.

The Witness: Well, that is just a convenient way of showing visually why I said in my judgment will be practically nothing of the original shaper for making Model T shafts, that could possibly be used in a shaper for a tractor shaft; certainly none of the patterns, and nothing more than possibly some screws and bolts, that might be used. As far as the special parts of the machine are concerned, that Model T shaper was too highly specialized to be modified or adapted to the tractor cam shaft.

* * * * *

(1491) ERVIN FRANKLIN was thereupon called as a witness on behalf of the Defendant, and being first duly sworn, *testified as follows:*

DIRECT EXAMINATION by Mr. Farley.

Q. Your full name, please? A. Ervin Franklin.

Q. Where do you live, Mr. Franklin? A. In Detroit.

Q. And you are employed by the Ford Motor Company? A. I am.

Q. And how long have you been employed by the Ford Motor Company? A. I would say since '25 steadily.

Q. And what is the nature of your duties at the Ford Company? A. Cost clerk in the cost department.

Q. You are in the same department as Mr. Hovis? A. Yes, sir.

Q. How long have you been doing that particular type of work? A. You mean cost work, Mr. Farley?

Q. Yes. A. Well, I started cost work about 20—about '28.

Q. What was the nature of your duties in 1927? A. Writing, writing operation sheets.

Q. Now, in writing up operation sheets in 1927, were you a time study man at that time? A. No, sir, I was not.

Q. You were doing that work in the Rouge plant? A. I was.

(1492) Q. Did you have a time study department at the Rouge plant at that time? A. We did not.

Q. Do you know when the company installed a time study department at the Rouge plant? A. I do not know exactly when it was, but, I believe it was probably five years ago.

Q. Was that— A. (Interrupting): Five or six; I don't know.

Q. Do you know who was—

Mr. Spohn: (Interposing): The witness answered "five years ago."

Mr. Farley: He said five or six years ago.

A. I wouldn't say. I don't know. I couldn't say exactly when it was.

Q. (By Mr. Farley): Do you know who was assigned to the job of starting the time study department at the Rouge plant? A. I believe Mike Klopsic was.

Q. And it was from whatever time Klopsic was assigned to that job that the time study at the Rouge was inaugurated? A. That is right.

Q. Now, Mr. Franklin, I show you a paper, couple of sheets entitled, "Cam shaft used in T-5949 assembly," and I call your attention to the initials, "E. F. B. G." at the bottom of the second page of that. What do those initials, "E. F." stand for? A. Those are my initials. The initials of my name.

Mr. Farley: I might state at this point that the sheet just shown to the witness is the original from which the photostatic **(1493)** copy attached to the Defendant's Exhibit—what is that?

(There was a discussion off the record.)

Mr. Farley: (Continuing): Exhibit 15 attached to Exhibit C, Defendant's statement of account.

Q. (By Mr. Farley): Are those your initials? A. They are.

Q. Did you prepare that particular sheet? A. I did.

Q. Now, I would like to ask first, Mr. Franklin, as to the times given for the various operations on that sheet. Were they made as the result of a stop watch time study? A. They were not.

Q. Well, just how was that sheet prepared, and for what purpose was it prepared? A. The sheet was prepared for inventory purposes to price our "in-process" inventory, and the figures were taken, were the word of the foreman or whoever happened to be assigned to that job of getting, or giving me this information.

It was an estimate of what they could do or the number of pieces per hour which was reduced to minutes.

Q. Well, now, for just what purpose did you employ this sheet, and, in that connection I show you another sheet which also contains the initials, "E. F.," on it, and which we find, upon checking, contains the same figures—let me first ask, have you checked these two sheets and are the various operations and times on the two sheets the same? A. I checked just the total, total minutes—2305.

Q. Now, will you just check those two sheets, the operations given **(1494)** and the minutes as detailed without reading them out. A. (The witness then checked the sheets.) The minutes are the same on both sheets.

Q. The figures are the same? A. Yes.

Q. The data on both sheets coincides all the way through? A. They do.

Mr. Farley: Now, then, I will ask that this second sheet be marked Exhibit 281.

(Exhibit No. 281 was then marked by the reporter.)

Mr. Michael: How can we identify that?

Mr. Farley: Exhibit 281 is identified as an operation sheet entitled, "Cam shaft, one used in T-5949 Assy."

Mr. Spohn: That is the same, however, that is on the other exhibit?

Mr. Farley: That is right.

Mr. Spohn: Are there any other distinguishing marks on it?

Mr. Farley: I will bring that out.

Mr. Spohn: All right.

Q. (By Mr. Farley): Now, I notice this difference between these two sheets, Mr. Franklin, that where Exhibit 281 has a number of pencilled notations along the left-hand side of it, there are no such pencilled notations on Exhibit 15? A. That is right.

Q. Now, will you explain these pencilled figures and state what the meaning of them is, and for what purpose those figures were put on there? **(1495)** A. The pencilled figures on the left of the printed column represent the minutes, or the total minutes down to that point. The figures on the right represent the total cost in money up to that point.

Q. Now, as I understand it, this sheet was the sheet that was used by you for the purpose of obtaining an inventory or taking an inventory of work in process of manufacture? A. That is right.

Q. At inventory time? A. Yes, sir, that is right.

Q. And starting with the column of pencilled figures just to the left of the typed figures, I noticed that you have the figure 1.20 as the first one, in the third vertical column from the right-hand side of the sheet. Just what do you get that figure 1.20 if you please? A. That is the total—this check out here represents the fact that some were found

in inventory up to that point, finished through that point, that total is a total of the minutes down to that point.

Q. In other words, the 1.20 is the sum of the .2400 and .9600? A. That is right.

Q. Adding those two together, you get 1.20, and the same is true for the second pencilled figure in the third column from the right of the sheet, which is 2.00. That figure is obtained by adding the typewritten .800 to the 1.20 pencilled figure? A. Right.

Q. And that is the system used all the way down, is that correct? A. Departmentally.

(1496) Q. And when we come to the point, to the next pencilled figure in the third column from the right of the sheet, 4.061, what is that? Is that the total of all of the figures, the typewritten figures immediately above? A. No, it is not. It is the total from the point where it goes into another department. Here is 410 department, or the machining department. That represents the total from the time it starts in 410 down to this point.

Q. Now, in order to be sure about that, will you just add those figures and see whether this 4.061 is the total of all of them, or just the total from .286 down to .534? A. (The witness does as requested by counsel.) That is correct. The total is for 410 department down to that point.

Q. Just for the 410 department? A. Yes.

Q. And it doesn't include the work in department 410? A. It does not.

Q. I see. And now, as I understood your testimony, the check mark in red crayon appears to me to be at the opposite, the number of the operation towards the left of the sheet indicates that you found stock finished up to those particular operations, from which it was necessary to estimate costs? A. That is right.

Q. Now, taking the figures on the pencilled figures at the extreme right of the sheet, will you just explain what they mean, please? A. Well, that is the cost in money, the actual cost in money of the part at those various points. For instance, the first one **(1497)** would be a cost of 12 cents or 12.01.

Q. That is on the number of pieces that were processed to the point of "Cut to length" in department 410? A. That is the cost for one piece.

Q. Yes, I see, that is the cost for one piece? A. Just up to that one point.

Q. And how do you get that particular figure? By multiplying the productive labor in the department at the hourly cost, multiplying that by the .2400, is that right? A. Well, the actual labor and the burden that was spent for making, that was spent for money, actually spent for making that part as reported by the time department, as posted on this sheet taken from the cost card, the actual cost card.

Q. Now, what particular cost card did you use to get those figures? That is cost summary card, Exhibit F-6? A. I did.

Q. I see.

Mr. Farley: Well, the witness has just referred to certain tabulations on the second sheet.

Q. (By Mr. Farley): And will you just explain those tabulations? You have here, "Mat.," that is material, 1027. And "L"— A. (Interrupting): That is labor.

Q. Now, let us just explain those figures. Show where you get them from your cost summary card? A. Well, the material is 1027.

Q. And that is shown on the cost summary card, Exhibit F-6 in the first block, on the left-hand side, which appears, over which appears the stamp, "Inventory, December 31, 1926," is that right? **(1498)** A. Correct.

Q. And, then, in the columns which begin, "Production," "Department," "Material," "Labor," "Burden," "Total," you take the figure of "Mat." on your sheet, the second sheet of Exhibit 281, and you get that figure of 1027 from the cost summary card, Exhibit F-6, is that correct? A. I do.

Q. All right. Now, just continue on that. A. 1027—0373.

Q. Now, your next figure—"L" is labor? A. Labor.

Q. And that comes from the column entitled, "Labor" in the same block, is that right? A. Correct.

Q. And the figure there is 0373? A. Yes. Next again is burden, 0371 or overhead as I have it. Overhead and burden being the same thing.

Q. You figure the amount of burden, 0371, as given on Exhibit F-6? A. Correct; making a total of the labor and

material, overhead, 2771 which also was taken from this card.

Q. Exhibit F-6? A. Yes.

Q. And, on your second sheet, you just used "T" to identify the total and the figure you have taken for the total is, coincides with the figure on Exhibit F-6. It was taken by you, as I understand your testimony, from this card, the cost summary card, Exhibit F-6, is that right? A. That is true.

(1499) Q. Now, the first series of figures about which you have been just testifying, they are all written in pencil and "410" appears in pencil above. Now, just to the right of those, there is another tabulation in which "Matl." "Labor," "O. H.," and the total is put on the card by means of a rubber stamp? A. Right.

Q. And immediately above that, you place, "410" in pencil? A. Yes.

Q. Now, just explain what relationship there is between the figures appearing opposite the stamped lines, where you get that information from the Exhibit F-6, if you did get it from that? A. There is a total labor in 410 department which is the machining department of .2802, and overhead of .4078, making a total of .6880 as expended in that department on that part.

Q. And those figures as placed on your Exhibit 281, all coincide with the figures on Exhibit F-6, and were obtained by you from that exhibit, is that correct? A. Correct.

Q. Yes. Now, will you just explain, Mr. Franklin, where and how you then figured the figures in the right-hand column and the significance of those? That is, the pencilled figures in the extreme right margin of the sheet? A. Taking the first figure, the total down to this point (indicating), the parts found would be—

Q. (Interposing): Now, down to what point? A. Finished through the first operation which is "Cut to length" here (indicating).

Q. That is the first point. This point.

(1500) Mr. Farley: Just leave this off the record.

(There was a discussion off the record.)

A. For the operation of, "Cut to length," there is a minute cost of .24, and that cost, the percentage of that to

the total of 2.40, whatever that percentage happens to be, is taken of this total labor and burden as represented here by the actual cost taken from the cost card.

Q. Now, just a minute. When you say, "As represented here," just explain what you are referring to? A. As represented by the .1744.

Q. On the second sheet? A. On the second sheet.

Q. Under the heading 410 and the pencilled figures or tabulation in the lower left-hand corner of the sheet, is that right? A. That is correct.

Q. (Continuing): Of Exhibit 281? A. Yes. And the percentage is taken of this .1744, which, in turn, is added to the material cost in that department, giving us a total of .1201 for the operation of "Cut to length."

Q. I see. Then, as I understand it, you find in Department 410 that the total minutes of the operations in that department or the total of 2.40 of a minute, 2.40 minutes, is that right? A. Correct.

Q. Then, you take the figure 220—.2400 is that right? A. Yes.

Q. And you find what percentage the .2400 is to 2.40, and take that proportion of the figure which you have over here, this .1744 on the second sheet, which is the total of labor and **(1501)** overhead, is that right? A. Yes. But I say that they have used a little shorter method to arrive at the same thing; but they have established a rate here, evidently by dividing this .2400 into the actual money, thereby getting a rate of 0727 which could be used by multiplying that rate by either one of these minute figures here.

Q. Yes. But, by any one of the minute figures, I see? A. By any one of the minute figures, yes.

Q. Now, your testimony just given, related to Department 410? A. Yes.

Q. And did you follow the same process with respect to Department 410 for the operations beginning with "Center both ends," operation No. 7 continuing on down to the end of the sheet, operation 50, "Handle and conveyor"? A. Same method used in figuring.

Q. Now, were those sheets used in the Ford department for any purpose other than the purpose of costing or determining cost of work in process for inventory purposes? A. There is one other reason, possibly, to acquaint the cost man with the sequence of the operation, that is all.

Q. Those sheets were prepared, as I understand it, by you, that particular sheet there? A. It was.

Q. Now, is that particular sheet and the information given in that sheet, would it be of any value for the purpose of determining the exact or actual production in pieces per hour or anything of that type for any of the operations listed there?

Mr. Spohn: Oh, if your Honor please, that is going pretty **(1502)** far with respect to this exhibit. It is calling for a pretty drastic conclusion.

Mr. Farley: There is the man that prepared it.

The Master: Well, he might know for what purpose it was prepared, but that is a pretty broad conclusion to ask whether it could be used for—

Q. (By Mr. Farley): Well, is that used at the Ford Company for the purpose of scheduling the operations or determining the actual time of any operation? Or, let me put it this way: Are you familiar with the operation time sheets that are prepared as a result of the time study by Klopsic, from Klopsic's department? A. I am.

Q. And is this sheet of the same character and does it have the same figures—are all the figures and times, minutes, on this sheet, 281 arrived at in the same way as the operation time sheet in Klopsic's department? A. It is not.

Q. Well, now, what is the purpose for which that sheet was used in the Ford Company? A. It was used just as a means of arriving at the cost of a part in process. In other words, this total, inasmuch as then we used it to arrive at the actual cost, it made no difference to us, whether or not this totalled down to an actual cost or not. It was a means of pro ration.

Q. I understand, that as far as the total minutes given, is that supposed to be an accurate figure, or is it an approximation? A. It is an approximation.

Mr. Spohn: Just a minute. Just a moment, your Honor **(1503)** please, the witness here, as I understand it, just prepared this summary from data that was given to him. That question calls for hearsay.

The Master: You already answered the question, did you not?

A. Yes.

The Master: You said it was an approximation?

A. Yes.

The Master: How do you know that?

A. I know that because I know that the man that gave me this information was telling me, to the best of his knowledge, approximately how many pieces per hour he could get. He might be within 50 percent, and, on occasions, I have found them not within 10 percent of the figure, and again, I have found them quite accurate.

Mr. Farley: The point there is, your Honor, here is the man that prepared that. He knew what purpose he was preparing it for, and certainly it is quite competent for him to say whether he was preparing that from the standpoint of having an exact figure along the whole line, and as a total, or was he doing it to get an approximation. There isn't anything hearsay about that.

The Master: I think I will let the testimony stand. There is an element of hearsay in almost all testimony, but this is competent.

Q. (By Mr. Farley): In order to make the record clear on that. Now, your duty was to prepare then, at this time, was to prepare a sheet of that character, is that correct? A. That is correct.

(1504) Q. And who instructed you to do that particular work? A. Well, I was instructed by Mr. Elmer, who then was at the head of our department, to get these things up in time for inventory.

Q. And were you given any particular instructions by Mr. Elmer as to how exact your figures were to be? A. We were not. We didn't—I was given to understand that I didn't have—they didn't have to be exact, as long as we got a method by which we could cost our inventory in process, inasmuch as we were absorbing all the money as represented by our actual cost figures; it didn't make any difference whether we were ten percent out or 20 percent or just where we stood on those figures.

Q. And that was the system you were employing at that time? A. It was.

Q. (Continuing): In the preparation of these sheets? A. Yes.

Q. Did you have available at that time, time study operation sheets that were made by the time study department? A. We did not, at the Rouge plant.

Q. Now, what is the system which you use at the present time, or do you know what the system is that is used at the present time for the purpose of establishing inventory costs at the time you take inventory, or work in process? A. Well, I know that we aren't using this method lately.

Q. Well, what is the method that you use now? A. I couldn't tell you just how they price them now.

Q. You are not on that particular work any more, is that the idea? A. No, sir, I am not.

Q. Could you state whether or not, at the time you prepared this **(1505)** sheet, you had available to you, time study operation sheets that were prepared by the time study department? A. We did not.

Q. And does that explain why you were put on the job of going out and making an operation sheet of this type? A. Yes, sir. We had to have something which this represents. It is an approximation as far as those minute costs are concerned on there. There has—it has something by which to price the inventory. That was the method at that time.

Q. When you said "this," you are referring to Exhibit 281? A. Right.

The Master: What date were you transferred from this particular branch of the department?

A. Well, I couldn't say the exact date, your Honor, but I—

The Master: (Interposing): Approximately?

A. But I think it has been about, probably, 7 or 8 years since I worked on there.

The Master: Before you discontinued or were transferred from that particular type of work, did the department at any time use the operation time sheets of the time study department for the purpose for which these sheets were used?

A. All the time that I worked on these sheets, we did not have a time study department at the Rouge plant.

Q. Now, referring to Exhibit 15, were you approached at any time by Mr. Woehrle in connection with this matter, and particularly with respect to the records that may be available—you know who Mr. Woehrle is? A. I do.

(1506) Q. And I am referring now to this particular sheet, Exhibit 15. Did Mr. Woehrle ask you when he first talked to you, or, at least, at any time that he talked to you, whether there were any operation sheets to be had anywheres in the records of the company? A. I told him that there were operation sheets, but where they were, I didn't know, exactly, where they were until we looked for them.

Q. And, as a matter of fact, you led Mr. Woehrle to the basement files in the Rouge plant and dug out a number of operation sheets? A. That is true.

Q. And, what, if anything, did you tell Mr. Woehrle about those sheets? A. I told Mr. Woehrle for what purpose we used them, as I have testified here.

Q. But, did you, at the time you gave him the—explained to him that these were not sheets that had been prepared as a result of information obtained from a time study, a clock-watch time study, or a stop-watch time study? A. I did. I told him that they were not time studies, but operation sheets as I knew them.

Q. Now, I show you two other sheets which are the originals of Exhibits 16 and 17, respectively.

Mr. Michael: Of Exhibit C?

Mr. Farley: Yes, of Exhibit C.

Q. (By Mr. Farley): And I will just mark in pencil on these, Exhibit 16 and Exhibit 17—taking Exhibit 16 and Exhibit 17, now, are they also sheets which you found in the basement files **(1507)** in the administration building of the Rouge plant at the same time that you found the original of Exhibit 15 and turned them over to Mr. Woehrle? A. They were found at the same time, Exhibits 16 and 17.

Q. Now, can you state whether or not the Exhibit 16 and Exhibit 17 are similar to Exhibit 15 with respect to the method by means of which the sheets were prepared and the purpose for which they were used? A. They were prepared and used for the same purpose.

Q. Prepared in the same way? A. Correct.

Q. And, calling your attention to the figures in pencil, first, on Exhibit 16, the two columns of pencilled figures to

the right, and the left, respectively, and the typewritten figures at the right-hand side of the sheet, are those figures compiled, and the same system followed there as followed with respect to Exhibit 15? A. They are.

Q. And the same is true with respect to Exhibit 17? A. Yes, sir.

Q. Now, then, as far as the figures for material, labor, overhead, under the stamped, or rather, opposite the stamps that are put on these figures; they, too, were obtained from cost summary cards similar to Exhibit F-6? A. They were.

Q. Do you understand the meaning of these figures—and, I will refer you to Exhibit 16 and Exhibit 281 in the lower right-hand corner of sheet 2, I find the word "Written, 12/21/25" and **(1508)** then, "Revised," "Revised," "Revised," "Revised," with different dates. Can you explain the meaning of that? A. The original sheet, the first sheet that was written, was written 12/21/25 on Exhibit 281, and the revisions represent a change made in the sheet; some change of some nature. What that change was, I could not say from the sheets.

Q. I see. Well, now, the fact that—let's see—let us refer to operation 17, "Turn cam lathe" .510. Does the fact that this particular sheet, Exhibit 281, which evidently was prepared on the 21st day of December, 1927—that is correct, isn't it? A. Yes.

Q. It was prepared? A. Yes.

Q. Now was the fact that that was prepared on that particular date and it contains the dates in 1926, two dates in 1926, and a date in 1925, does that indicate that this time .510 "Turn cam lathe" would have been the same on every one of the prior sheets?

Mr. Spohn: Well, if your Honor please, that is calling for a pretty far-fetched conclusion on that sheet.

Mr. Farley: The witness knows the system. He prepared the sheets.

The Master: I will overrule the objection.

A. I cannot testify from this sheet, whether or not that particular operation was changed. I don't know whether it was changed or not changed.

Q. These five dates in the lower right-hand corner of sheet 2, does it indicate that there were five sheets, four sheets, prior **(1509)** to this one? A. It does.

Q. Now, can you state whether or not the four sheets prior, as noted on Exhibit 281, were prepared in the same manner as Exhibit 281? A. They were prepared in the same manner because it was the only method by which we were—by which we prepared these sheets, these operation sheets.

Q. At that time? A. Correct.

Q. That is from December, the first dated being December 21, 1925 until December 21, 1927. That was the only method and means available to you at the Rouge plant for preparing sheets of that character, is that true? A. That is true.

Q. Well, now, insofar as my question on this operation 17, turn cam lathe, is concerned, you stated that you couldn't say just what was on the earlier sheets for that particular operation. Now, can you say whether or not the fact that you have that time of .510 for that operation on that sheet would indicate that that time had been the same on the other sheets? A. Well, as I said, a change could be made anywhere in the sheet, anywhere along the line, either in writing the operations time, or anything else. And I have no way of telling from this sheet whether or not any operation had been changed.

Q. No way of telling that none of the operations haven't been changed, is that correct? A. Correct.

(1510) Mr. Farley: That is all. You may cross examine.

Mr. Spohn: Now, if your Honor please, in view of this witness' testimony, I think the plaintiff should be advised by the defendant with respect to the reports heretofore filed.

Do I understand now that it is the position of the defendant that Exhibits 15, 16 and 17 are not time studies?

Mr. Farley: Exactly.

Mr. Spohn: Well, then, I don't understand this language on page 23 of Exhibit C, beginning about the middle of the page: A time study dated December 22, 1927—and I take it that is Exhibit 16—shows .80 minutes for the straightening operation—which is the figure that is in operation 18 on Exhibit 16—and 2.00 minutes for turning cams on Melling lathe—and that two minutes is in operation.

And we are to understand now that these are not time studies.

Mr. Farley, I would like to be, just be informed, if these are not time studies, particularly with respect to that one, and others.

Mr. Farley: Well, if your Honor please, I might state that this further statement of account was filed in response to the order, which was the second order which was issued by you at the request of the plaintiff, and dated October 29, 1937, and that order on page 7 says, or rather, in paragraph 7, says:

"Furnish operation sheets similar in form to Ex.—Exhibit No. 7 attached to Defendant's statement of account heretofore filed herein * * * (reading) * * *"

(1511) Now, after that was received, I called in Mr. Woehrle. Mr. Woehrle spent several weeks around the Ford plant endeavoring to find such records as may be available. He got these particular sheets through Mr. Franklin, and at the time when he first got these, we had not been informed—Mr. Woehrle had not been informed, or neither had I—in fact, it was only comparatively recently that we discovered the difference between these sheets and the regular operation sheets, regular time study sheets. However, as we had been called upon to furnish each and every sheet that we could find, we furnished them at the time, knowing, however, that the information on these sheets could not be accurate in view of our knowledge of the machines.

Mr. Woehrle, as I understand it, and I will have him explain that himself, did not employ these sheets for his computations. I understand he did not.

As to one of the sheets—(To Mr. Woehrle): You did use one of those, is that correct—on the Model F. I know they couldn't use the Model A on Model T, because we didn't think at the time that either of those, even if they had been time studies, they could be properly representative, because it was at the very beginning of Model A production, and at the end of the Model T production; we didn't think they could be properly representative, and I think, for that reason, Mr. Woehrle did not use them, is that correct, Mr. Woehrle?

Mr. Woehrle: Yes, sir.

Mr. Farley: And didn't base a computation on them. However as we had been ordered by the Court to produce operation **(1512)** sheets, we produced these, as they were then in compliance with that order to furnish every operation sheet that there was.

I will admit, quite frankly admit, that our furnishing of these sheets, naturally, could not be otherwise than a bit confusing to the plaintiff, because of the differences in times. That is, there is such a wide difference on this particular Exhibit 15 sheet, giving the time for the turning cam lathe operation of practically a half a minute, and you probably remember Mr. Moise's testimony concerning these operations.

The Master: Yes.

Mr. Farley: Our point is that, and throughout our statement of account, the figures and computation of Mr. Woehrle's were based on Model T production particularly, entirely upon or almost entirely upon—at least, as far as the output of the machines were concerned; the time study, Exhibit 14, made by Mr. Marentette, which Mr. Woehrle had thoroughly checked with Mr. Marentette concerning its accuracy.

Mr. Spohn: Do I understand, then, that when Exhibits 15, 16 and 17 were included in the account, it was your and Mr. Woehrle's thought to understand that they were time studies?

Mr. Farley: That was my idea about it.

Mr. Spohn: Well, the witness just testified that he told Mr. Woehrle they weren't time studies.

Mr. Farley: Well, the witness is mistaken about that.

Mr. Spohn: Well, your Honor, the plaintiff must state at this time that we have relied—put it this way—we have gone to a lot of time and expense in analyzing the account of the defendant here. We have hired accountants to do it. We have **(1513)** taken considerable testimony, and where, as the statement of account, page 23, says it is a time study and other operation sheets in there, there is no differentiation in the account that they are not time studies.

It seems that at this late date for the defendant to come in here and attempt in some way or other to deny

those sheets is going a long ways in this proceedings, and we must register a protest against that.

The Master: At what time did you discover the true status of these operation sheets?

Mr. Farley: About four weeks ago, your Honor please, and when we were prepared to establish the facts, in consulting the witnesses, I had Mr. Franklin come down to the office, found that he was the man that prepared this, and after carefully checking into the subject with him, and getting his version of how these things were prepared, then, that was the first knowledge that I had.

The Master: Do you recall your original conversation with Mr. Woehrle when you dug up these sheets for him?

A. Well, I found that in our conversation about these sheets, that they were constantly referring to time studies. I thought I tried to make that when I went down to Mr. Farley's office, I tried to convince them of the fact that these were not time studies in any sense of the word. They were merely operation sheets, as I knew them, for this inventory purpose.

The Master: When you talked to Mr. Farley and Mr. Woehrle in Mr. Farley's office were they seemingly convinced that these were time studies, the same as the others?

(1514) A. Yes, they were.

The Master: But, going back to the original conversation with Mr. Woehrle, about when did that take place?

A. About these particular sheets?

The Master: Yes.

Mr. Farley: When you first found them in the basement?

A. Well, my recollection of that would be probably four or five months ago. I don't know definitely.

The Master: Well, this statement of account which has been submitted in evidence here and which contains photostats of the sheets as Exhibits was submitted—

Mr. Farley: (Interposing): January 3, 1938.

The Master: January 3, 1938, over a year ago—and with that information in mind, does that refresh your recollection as to the time that Mr. Woehrle inquired about the sheets and you dug them up for him?

A. Yes; that, whenever it was, we dug them up immediately, found out what he wanted.

The Master: Well, now, just describe what Mr. Woehrle told you at that time?

A. He asked me if I had any papers, any operation sheets, and I believe, he said operation sheets, time study sheets; I told him that I had operation sheets around somewhere, and we looked them up and found these sheets.

Now, he might have said time study, and he might have referred to them as time studies. Today, they are unknown as time study sheets. At that period when these were written, we knew nothing of a time study department; knew nothing of a time study.

(1515) The Master: Did he ask you how you prepared these sheets, and how you prepared the times for them?

A. I don't believe so, at that time.

The Master: Did you tell him? Did you volunteer the information?

A. The first that I recall of telling him how these were made up was when I met Mr. Farley here in his office a few weeks ago.

The Master: Well, you told him originally for what purpose these were prepared, did you not?

A. I did.

The Master: You testified to that?

A. I did.

The Master: Did you tell him as to where you got the figures as to time from?

A. You see, your Honor, when you say the figures—

The Master: (Interposing): The figures showing the time for each operation?

A. If my memory serves me right, I told him how they were made up.

The Master: How many times did you see Mr. Woehrle at approximately a year ago, when he was first inquiring about this subject?

A. I don't believe I saw him, I don't believe I saw him again after the sheets were pulled from the file, until possibly a few months ago. I don't—I think I saw him once or twice in that period of time from the time we first talked together.

The Master: How long a conversation did you originally have?

A. Very short and brief, I would say. Probably a couple of minutes.

(1516) The Master: And, then, did you immediately go down in the basement and find these sheets, or what happened?

A. I told Mr. Woehrle that I thought they might be found, and he went down and found them.

The Master: And did he come back and ask you about them afterwards?

A. Not to my knowledge he didn't. That is, not right away. Possibly he might have questioned me about them, maybe three, four, five months later. As to time, I couldn't say.

The Master: All right.

Mr. Spohn: There is nothing before your Honor. There is nothing I requested. I just made the observation.

The Master: Well, I wanted to get as clearly as possible the facts from this witness.

Do you have any questions?

Mr. Spohn: Yes, I have some cross examination.

The Master: Yes. I have just the one question here.

If these figures were only to be approximations, why did you carry them out to the third decimal place?

A. We carried out at that time all of our figures, all our figures in cost work carried out to four decimal places

in money, and the minutes, and the minutes were often carried out to four decimal places; and, I believe, here, about, possibly four years ago, we started to carry the minutes to two, and we still carry the money to four.

The Master: Did you decide on the number of decimal places to carry it out, or was that just the practice?

A. No. That was the practice at the time.

(1517) The Master: All right.

We will take a brief recess.

(Whereupon a short recess was taken.)

The Master: All right, you may proceed.

Cross Examination by Mr. Spohn.

Q. Now, Mr. Franklin, both exhibits, the one marked Exhibit 15 as attached to defendant's statement of account, and the other, marked Exhibit 281, have down on the right-hand corner of them dates on which these exhibits were written and revised, revised and re-written or revised, isn't that true? A. Right.

Q. Do you know how often the defendant took an inventory? A. Used to take it once a year.

Q. And that would be when? While you were making up the sheets? A. I believe it was between Christmas and New Year's, if I remember correctly.

Q. And did—do you know whether the defendant closed its books on a calendar basis at that time? A. I couldn't tell you.

Q. But the inventory was taken between Christmas and New Year's during the period you were writing up Exhibit 15 and Exhibit 281? A. I believe so.

Q. Yes. And that was the only time the sheets were prepared? A. No. I covered the plant and it took me a year to cover the plant, and if a short time before the inventory, we were then lacking a lot of sheets, or we felt that they needed a revision brought **(1518)** up to date, we would do so. But it was usually the sheets that we were lacking and in going through a department where we lacked a number of sheets for the pricing of inventory, we would go through and make a hurried check of what was already in there.

I wrote them on here. It took me approximately a year to get around, and then, if I didn't quite make it around, we would hustle out and get the foreman to write them, and everything else, and everything else.

Q. And they were prepared for, you say, defendant's inventory? A. For inventory and to acquainting the cost men with information.

Q. And do you know of what use these were after you prepared the figures? A. Then figured the inventory on them. The figures, the figures to the right there were put on by the comptometer division.

Q. Yes. A. (Continuing): After I had put the cost figures on here at the bottom.

Q. And you pencilled the figures on the right there? A. Yes.

Q. And do you know whether that is the inventory the defendant regularly used thereafter? A. I couldn't say that. I would say that this figure was used at that period.

Q. For inventory purposes? A. For inventory purposes.

Q. Yes. Income tax returns made on that inventory basis? A. I wouldn't know that.

(1519) Q. You wouldn't know that? A. No.

Q. I see. Now, what is on the top of Exhibit 281, and, again, on the top of Exhibit 15, what do the words in parentheses "One used in T-5949 Asy period" mean? A. That was used in that particular assembly.

Q. Well, what is an assembly? A. An assembly of a cam shaft, and, I believe, in this case it consisted of a gear and a cam shaft.

Q. And why would those figures be used in an assembly? A. The figures used?

Q. Yes. Why would you gather those figures together for an assembly? A. Well, in building up an assembly, the cost, actual cost, practice when come time to figure this particular part, T-5949 assembly, you build it up from either a check in the shop—usually a check was made in the shop for that assembly. To my knowledge, there is no reason for it. There is no apparent reason for it.

Q. Well, do you know whether this particular Exhibit 15, and also Exhibit 281, whether those costs, figures therein were used in assembly costs, T-5949? A. You mean these figures here?

Q. Yes. A. I know they were not.

Q. You know they were not? A. Yes, sir.

Q. Well, don't you know it is a fact that the defendant used to **(1520)** charge out its cost of goods sold on the basis of figures such as set forth in Exhibits 15 and 281? A. I don't know that.

Q. Did you have any experience with respect to that? A. May I have that question again, please?

Mr. Spohn: Read the question.

(The question was then read by the reporter.)

A. I don't know that. I know that any of these figures appearing on here were never used for cost of any kind.

Q. When you say, "appearing on here," you are now referring to Exhibit 15, is that right? A. Exhibits 15 and 281.

Q. Yes. On Exhibits 15 and 281, over to the right, and down the corner, revised March 22, 1926; does that particular date have any significance to you? A. No, it does not, other than the fact that it was written and revised at that time.

Q. I see. May they have been prepared for an income tax return? A. Not to my knowledge. I don't see how it could.

Q. You were just told to prepare it? A. That is right.

Q. Don't know what purpose it was to be used for? A. That is right.

Q. I see.

Mr. Spohn: If your Honor please, there was considerable testimony taken, if your Honor will remember, on cross examination—I think it was last February or March, on some of these records, and plaintiff would like the opportunity of recalling **(1521)** this witness for further cross examination after we check back on that testimony.

The Master: Is that agreeable to you?

Mr. Farley: Yes; all right.

There is just one other question I would like to ask Mr. Franklin.

The Master: Yes.

RE-DIRECT EXAMINATION by Mr. Farley.

Q. At the time you gave these sheets to Mr. Woehrle, did you know, or did he tell you the purpose for which he wanted them? A. He did not.

Q. And you did not know at that time what purpose he did want to get the sheets for? A. No, I did not.

Mr. Farley: That is all.

RE-CROSS EXAMINATION by Mr. Spohn.

Q. Mr. Franklin, did you know Mr. Woehrle prior to that time? A. Prior to which time?

Q. Prior to the time that he came to you with respect to those sheets? A. Never.

Q. He didn't then state for what purpose he wanted those sheets? A. No, sir, he did not.

Q. And you just handed him the defendant's records here without knowing the purpose for which they were to be used? **(1522)** A. Yes, sir. I was told by my superior that I was to give him anything that he wanted.

The Master: And what did he say he wanted?

A. And he told me he wanted sheets, operation sheets, and, I believe he said time study, but I knew what he was after, regardless of what he called them. There was only one thing I could give him, which we have done here. He might have called them time studies; he might have called them operation sheets. I wouldn't say to that. But, I knew, whichever term he used, I knew what he wanted.

The Master: And when you gave him these sheets, did he inquire about their nature, or how the operation time was computed?

A. Not to my knowledge. Now, later, he may have. I don't believe that he did, now. Not to my recollection.

Mr. Spohn: That is all for now.

Mr. Farley: Might I ask this question?

RE-DIRECT EXAMINATION by Mr. Farley.

Q. Do you refer to these sheets in your department as operation sheets or time studies, either one; I mean, do you use either term? A. I have always used the term of operation sheets.

Mr. Farley: I see. That is all.

RE-CROSS EXAMINATION by Mr. Spohn.

Q. Well, they are called time studies, too, aren't they?
(1523) A. Some might call them that.

Q. You yourself do, too, don't you? A. I have never called the sheet a time study sheet at any time until its recent discussion here. I have always referred to them as operation sheets. But, there are operation sheets today, but they use different time study that are time studies.

Mr. Spohn: I would like to have further cross examination later, your Honor.

The Master: All right.

Mr. Farley: That is all.

The Master: You are excused, then.

(The witness was thereupon excused.)

* * * * *

(1595) JOSEPH HENRY ACHTEN was thereupon called as a witness on behalf of the Defendant, and having been first duly sworn, testified as follows:

DIRECT EXAMINATION by Mr. Farley.

Q. Please state your name. A. Joseph Henry Achten.

Q. Where do you live, Mr. Achten? A. Oxford, Michigan.

Q. Were you ever employed by the Ford Motor Company? A. Yes, sir; from 1915 to 1933.

Q. What was the nature of your duties at the Ford Motor Company? A. Various positions, as foreman, general foreman, maintenance, and, since 1927, production department superintendent.

Q. In 1927, when you were in the production department, what particular department of the Ford Company were you in? A. Department 410.

Q. What particular part does that have to do with the manufacturing there? A. Camshaft, A-6250, and T-410; A-6135. There are 13 different parts.

Q. Just when was it in 1927 that you went in the cam shaft department? A. June 7.

Q. What type of shaft were they manufacturing in the department at that time? A. Model T.

Q. Do you recall when they changed over to model A production? A. That very same time.

Q. That very same time? A. Yes, sir.

(1596) Q. That is, they were changing their model A production at that time? A. Yes, sir.

Q. What was the nature of your duties in the cam shaft department at that time? A. General foreman.

Q. General foreman of the department? A. That is right.

Q. Do you know anything about the tolerances, if any, that were adopted by the Ford Company with respect to the standards of precision and accuracy of the model A shaft as compared with the model T shaft? A. Yes, there was a distinct difference. The model A cam shaft was held within closer limits than the model T.

Q. Closer manufacturing tolerances? A. That is right.

Q. Can you state, from your own recollection, how much closer the tolerances were on the model A as compared with the model T? A. Well, in regard to the cam, the bearings followed a lower figure. The tolerances on the bearings were practically the same. But the cams are entirely different tolerances. The model T, I think, ran as high as .008, where with the model A we only had .002.

Q. That is, the limit between upper and lower tolerance? A. That is right.

Q. You had a .002 allowance to work with on cams for the model A, whereas, on cams of the model T you had .008 allowance, from upper to lower limits? A. Yes.

(1597) The Master: That was on the finished job?

A. The finished job, yes.

Q. (By Mr. Farley): How long did you remain in the cam shaft department, Mr. Achten? A. Until December of 1929.

Q. You mean December of 1929? A. Yes, sir; that is right.

Q. What was the nature of your employment after December, 1929? A. I went to Germany for about three months, and I came back and worked in the motor experimental.

Q. What was your trip to Germany, a private, personal matter? A. Yes, that was a personal affair, yes.

Q. How long did you work in the motor experimental? A. Until 1932, March 20, 1932.

Q. And then what? A. And then I was sent to Russia for one year, and I came back in April, 1933, for the Ford Motor Company.

Q. Your trip to Russia was a trip on behalf of the company? A. That is right.

Q. What was the purpose of your trip to Russia? A. To set up and supervise production of the model A motor.

Q. Where? A. In Nizinovogarod, is the name of the city; I don't know how you spell it, but they call it Gorky today; it is 300 miles east of Moscow.

Q. Was your work there in that plant owned and operated by the Ford Company? A. No, it was not. The plant was owned and operated by the Russian government; but I understood from the sales manager **(1598)** that the Ford Motor Company had agreed to send a group of engineers over there, in case they found it necessary.

Q. This plant, in what is now called Gorky, that was operated by the Russian government? A. Yes.

Q. The Soviet Republic? A. Yes.

Q. Ford, the Ford Company, had no ownership or interest in that plant? A. No, sir.

Q. At the time you went into the cam shaft department, what type of machinery was in the department at that time, for the purpose of machining the cams and cam shafts? A. I recall two different types. They had the cam shaper, and the Melling lathe.

Q. Were the cam shapers in the department in 1927, when you went in there? A. They were.

Q. They were shapers? A. They were—only two of them.

Q. Did you actually operate those two shapers in the department? A. Yes, on the model T cam shaft.

Q. What did you use on the model A cam shaft, for machining the cams, when you started model A production? A. The Melling cam lathe.

Q. Can you state whether or not you experienced any difficulties when you switched over to the model A production, in producing shafts for the model A on the Melling cam lathes? A. Well, our difficulties were many. In the first place, we **(1599)** could not hold a form of the cam

accurate enough to grind these cams with the tolerances on the print.

Q. What were the tolerances on the print, if you recall? A. I believe the tolerances on the grinding operation were .002.

Q. How much did you allow, or would the print show that the amount to be left on the cams for the finished grinding operation? How would you grind to the size to which you rough-turned, or were supposed to rough-turn? A. No, not at that time. The individual operations were entirely left up to the department foreman, and the print only showed at that time the finished size.

Q. Was there at any later date the practice put in of showing the tolerance to be allowed, for grinding, on the print? A. I do not think so.

Q. That was always left, as I understand it, then, to the judgment of the foreman in the department? A. That is right.

Q. What was your practice, then, as to the amount of stock you would leave from the rough-turning, to be taken off in a grinding? A. Well, on the model T cam shaft, we had .020 stock, at least, between the roughed and the finished. And we tried the same thing on the model A, in order to get production, but it was impossible. We figured it took nearly .050 to .060, on the model T, to clean up, on the grinder, and that stock had to be removed on the grinder.

Q. When you said .020 on the model T, did you mean .020, each side, or .020 on the over-all diameter? **(1600)** A. .010 on a side.

Q. .010 on a side? A. Yes.

Q. With the model A, that is .060, or .030 on a side? A. .030 on a side.

Q. Are you sufficiently familiar with the operation of the Walcott machines to state whether or not the job of turning the model A shaft, as compared with the model T shaft, was easier or more difficult? A. The model A was much more difficult, due to the contour of the cam. It was an entirely different contour, and the machine, the lathe, the cam lathe left an excess stock at the very point of the cam on one side. Due to this difficulty, we had to leave sufficient stock on there to clean up the cam itself, below

that little lump left at the point of that cam. That was our chief trouble.

* * * * *

(1606) Q. What was your particular position insofar as the Russian production was concerned? Were you generally in charge of that whole proposition? A. Yes, I had charge of the entire plant. I had the privilege, through Mr. Sorensen of the Ford Motor Company, to pick two selected men from each department or each building, and I could pick them myself, and gather all of the information I wished, including blueprints and tool numbers and all of the information I would like to have, and take it along with me. Among this information there was a complete set of all operations on this job.

Q. That extended not only to the cam shaft, but to each and every part that went into the model A car, from one end to another, **(1607)** is that correct? A. Most of them, whatever I could get; it included a trunk full; it was most of the jobs pertaining to the motor.

Q. How long did you stay in Russia? A. One year.

Q. How large a force of employees did they have at the Russian plant? A. 25,000.

Q. You were placed in charge of seeing to it that they got out the production? A. Yes.

Q. In other words, you must be the "Mr. Sorensen" of the Autostroy plant? A. That is about right.

Q. I hand you another set of similar sheets which refer to the rear brake cam shaft inspection. I hand you these second set of sheets, which I will ask to have marked in evidence as Exhibit 288, and will ask you to tell the Court what they are.

(The set of sheets referred to were thereupon marked Defendant's Exhibit 288 by the reporter.)

A. This is just another form of the same type of information sheets made up for the Russian government.

Q. And I assume that you had a set of sheets of that type for all of the parts to be manufactured, and which was put under your supervision there in Russia? A. Yes.

Q. Can you state the date when these sheets were prepared? A. They were prepared the latter part of 1929 and the early part of 1930.

(1608) Q. The set of sheets which are marked Exhibit 214-A, will you look at them and see if there are any dates on those sheets? A. The dates were never carried on these sheets.

Q. How about the set of sheets which we have marked Exhibit 288? A. No, I do not think so.

Q. The set of sheets marked Exhibit 288—the first sheet contains the date "December 18, 1929"; the second sheet is dated the same; the third sheet is dated "April 15, 1930"; the fourth sheet is dated "April 8, 1930"; the fifth sheet is dated "December 26, 1929"; the next is dated "1/14/30"; the next "1/14/30"; the next one, "1/15/30"; the next, "1/14/30"; the next "12/19/29"; the next "1/14/30"; the next "12/17/29"; the next "1/14/30." Now, can you explain why some of these sheets contain different dates than the others? A. Yes. The time study department has only so many. I think they are covered in these departments in one day. That is the reason the dates varied.

Q. Now, with reference to Exhibit 214, can you state, by reference to the dates on the other sheets forming a part of Exhibit 288, when the sheets in Exhibit 214 were prepared? A. I am sure these sheets were the first ones to be made when the order was given us to make a time study, because I was in charge of this expedition to Russia, and I saw to it that my job was taken care of first. That is the simple reason.

The Master: Who actually prepared this? The Time Study Department?

A. The Time Study Department, yes.

Q. (By Mr. Farley): Is that the particular time study you have reference to when you spoke of having a time study made, and a **(1609)** time study was made, showing 30 shafts an hour? A. Yes.

The Master: The operations shown in the time study department do not commonly list the operations according to production per hour, do they?

A. No, they listed the amount of production per hour, and by the actual time taken by the machine when in operation.

Q. (By Mr. Farley) Are you familiar with the operation sheets of the time study department? A. Well, I don't understand you just right. If they have a different form in the time study, I don't know anything about that.

The Master: As foreman, didn't you have access to certain sheets showing the time it took to perform each operation?

A. Yes, the time study department furnishes our department with a copy of their operation sheet, made up by the time study department.

Q. (By Mr. Farley) I show you Exhibit 7. My question was this, were you familiar with the operation as contained in the sheets of the time study department? I had reference to sheets of the character of Exhibit 7. A. Yes. That is a standard sheet we have in our department.

Q. That is what you had reference to when you said the time study record differed from the record as shown on Exhibit 214, is that right? A. Yes.

Q. Will you refer to the time study sheet, and point out to the Master just what you mean, particularly with reference to the operation of turning the cams? **(1610)** A. This time study sheet is given in minutes, the cost, in minutes, because we never work in dollars and cents; it is given in minutes; whereas, these sheets, Exhibit 214, were made up for the Russian government in that instance, and pieces per hour were given at the request of the Russian representative.

Q. As far as operations are concerned, I might state for your information that this Exhibit 7 happens to be a time study sheet for July 1, 1931, of operations on the model A, when the Pioch machines were in use. Now, insofar as these operations are concerned, I notice you have an operation number on Exhibit 214-A, operation 1, with mill ends, with a No. A-1 Davis mill. What if any operation does that correspond with on the operation sheet Exhibit 7? A. Operation 2, mill both ends to rough length.

Q. Now, I notice operation 13, on Exhibit 214-A, is "turn cam," and it is printed, "milling cam lathe," is that correct? A. No, that is a clerical error. There is

no such thing as milling cam lathe. It is their Melling machine. This would be "Melling."

Q. Is there a similar operation on the operation sheet, Exhibit 7? I think you had better go back again to that page. A. Operation 14?

Q. Operation 14, on the operation sheet, Exhibit 7, corresponds to operation 13 on Exhibit 214, is that correct? A. Yes.

Q. The reason for the difference in number is that No. 2 on Exhibit 7 is similar to No. 1 on Exhibit 214. So that operation 13 on this sheet becomes operation 14 on Exhibit 7? **(1611)** A. That is right.

Q. Now, I call your attention to operation No. 12 on Exhibit 214-A. Will you explain that particular operation to the Court? A. Well, operation 12 had to be put in there to straighten that cam shaft within reason, to enable the machine to take care of the cam in regard to these bearings. The cam is made out of a forging, and these forgings did not come straight enough for the machine to take care of it as they came. They had to be straightened by hand, with a certain limit.

Q. The sheets, Exhibit 214, gave all of the operations required to complete the cam shaft, starting from the beginning in Department 410, to the final operation; and also in addition, the list of operations, which gives the type of machine from which the operation was performed? A. That is right.

Q. Now, with respect to operation 12, state whether or not it says "hand press," and in the "production per hour" it gives "100 pieces per hour"? A. That is right.

Q. Do I understand all of these figures of production per hour, and all of these various machines, are figures which were supplied by the time study department? A. Yes.

Q. As the result of a stop-watch time study? A. Yes, that is right.

The Master: Pardon me. Do you know whether they made special time studies in each department for that purpose, **(1612)** or whether they referred to their regular time studies which were given on each opera-

tion, in minutes, and then deduced the production per hour from that?

A. There is no difference between the pieces per hour, taken off the stop watch, and the minute-cost. The figures are the same. If you multiply the minute cost by the pieces per hour, you will have the same result.

The Master: Now, I am asking you what system they used. Did they go out and make a special study in that department?

A. Yes.

Q. (By Mr. Farley): They did have a special study made of that job? A. Yes.

Q. It was a study made at your request? It was a request by the department to do that? A. Yes.

The Master: What instructions did you give them in reference to that?

A. To have a time study taken, and give the pieces per hour, according to the time study on the job. These sheets were prepared for the Russian government, and it is easier for the Russian to see the pieces per hour, than it is to figure it in minutes and fractions.

Q. (By Mr. Farley): In connection with operation 13, "turn-gang,"—that is on the basis of an operator running how many machines? A. One man runs two machines, and each machine will produce 30 per hour.

Q. How about the straightening operation? **(1613)** A. One machine, with one man, 100 pieces per hour. These time studies are not always for one reading. Several readings are taken by different men. Sometimes we have a good operator on the job, and sometimes a poor operator, and the average is taken on this sheet, to be good and sure that the amount is correct.

Mr. Farley: I think this Exhibit 214 is already in evidence.

Mr. Green: It has not been offered yet.

Mr. Farley: I will now offer it. I think there was some objection.

The Master: Exhibit 214 was offered already.

Mr. Michael: It has been identified, yes.

Mr. Farley: I do not know whether we had that identified by Mr. Klopsic.

Mr. Michael: It was just identified.

Mr. Farley: I think I said at the time I withheld the offer, knowing I was going to produce Mr. Achten, who is very familiar with the whole set of circumstances. I will offer that, and also make an offer of page 1 of Defendant's Exhibit 288; it has no particular relevancy to the subject of this inquiry except as establishing the date when the other record was made.

The Master: If you read into the record all of the other dates, why not leave these out entirely?

Mr. Farley: All right.

The Master: You can simply refer to the fact that some operation sheets have been produced for other parts of the Ford automobile, and the other sheets are added, according to **(1614)** the dates which have already been read into the record.

Mr. Michael: You did not offer the book, Mr. Farley?

Mr. Farley: No. I think he cut them out.

The Court: Do you have any objection to Exhibit 214?

Mr. Michael: Just a minute, your Honor. I may want to cross examine.

Mr. Farley: I think that completes the direct examination, anyhow, of the witness.

(Further discussion between counsel off the record.)

Mr. Michael: Were you through, Mr. Farley?

Mr. Farley: Yes.

Cross Examination by Mr. Michael.

Q. Mr. Achten, you spoke of a straightening operation here, on this Exhibit 214,—item No. 12, isn't it? A. That is right.

Q. What was the purpose of that? A. This cam shaft,—call it Exhibit 30—had to be scraped in three places,—the back cam, and the front cam, and the center cam.

Q. You mean, the back bearing? A. Yes, the bearing.

Q. The back bearing, the front bearing and the center bearing? A. Yes. And if this cam shaft was bent in any way at all, the steady rest would not support this cam, and the forging would break the steady rest.

Q. I notice up here item No. 4, you have apparently some straightening operation 12, to correct the matter. (1615) A. No. On this form we have the straightening operations. When we rough the forge, you can see the mill-ends. This is the rough forge (indicating). You snag this off, but that would not snag the burr off. And on the center ends, we just straighten, then rough-turn.

Q. Now, this is not even rough-turned, is it? A. Different center bearings.

Q. It has to have different center bearings? A. Yes. We have that straightened, when we clean it.

Q. When you turn the center bearing? A. Yes. That is the straightening operation.

Q. No. 4? A. No. 4.

Q. Once you straighten the shaft, and it was straightened as far as the bearings are concerned, the three bearings are in line? A. Yes. The space between the bearings could still be off too much to clean up on rough-turning operations, on a cam lathe. We may straighten that, but that does not mean the cam parts.

Q. You mean the part of the shaft between the center bearing and the end bearing might just be corrected? A. Yes, and that had to be straightened in order to clean up the cams.

Q. Was this type of operation, the straightening operation, No. 12, the same type of straightening as you used, on No. 4? A. Exactly.

Q. What was the operation No. 4, how did you straighten it there? A. We just straightened the rests on the rear and front bearing, (1616) with the press on this center bearing, to straighten the center bearing sufficient so that we could clean it up.

Q. The straightening operation No. 12 was the same sort of straightening? A. The same sort of straightening. They were checked in between 2 and 3 cam and 6 and 7 cam. If you have a piece of chalk here, I will show you.

Q. In this No. 12 straightening operation, instead of checking the ends, you checked the intermediate parts of the shaft, to line them up with the bearings, is that right? A. Yes.

Q. When was that No. 12 straightening started? A. In 1927.

Q. When? A. I would say at the end of June or the first of July, 1927.

Q. That was when you started work on the "A" shaft? A. Yes.

Q. You did not do that on the "T" shaft? A. No, sir.

Q. Why would you do that on the "A" shaft and not on the "T" shaft? A. Because the "T" shaft, it was a smaller cam, in the first place, and the center bearing was not the same size as the others, and we just could not do it on the model A.

Q. You could not do what on the model A? A. Turning that cam without straightening it.

Q. But you could do it on the model T? A. Yes.

Q. In a Walcott lathe? **(1617)** A. Well, we had both. We had the cam shaper and the cam lathe, yes.

Q. Could you turn the "T" shaft in both of those machines without this straightening operation? A. Yes. For one reason, the model A cam shaft is rather heavier than the model T cam shaft. This center bearing on the model T cam shaft is the same size as the new shaft, between cams; and therefore, if this model T cam shaft runs out a certain amount, the steady rest will take care of that without injury. But you could not do that on the model A, because you have a heavy shaft.

Q. Yes, but the straightening operation brings the bearings in line? A. Yes, on the model A.

Q. You had to do some straightening on the model T? A. Yes.

Q. That was intended to line up your bearings? A. Well, that is true. But the relation of the off-center bearing, on the model T, with the parts in between, comes very much closer than the model A ever was.

Q. I don't follow you there. If you are straightening to line up three parts, the center bearings and two end bearings, I do not see why they would not be lined up in each case. A. Yes, but I didn't mean that. I said the center bearing on the model T, after this straightening, that that shaft is more apt to be in line than the model A.

Q. Why? A. Because they were alike. We have turned twice as much stock on this cam as you have on this one (indicating). The head **(1618)** there—

Q. Wait a minute. We are not anywhere near the head, yet. A. I mean in the forgings, when the cam comes out of the forging press, you have a red-hot shaft, and the head draws, and cools off, and this causes the shaft to warp a certain amount in here (indicating).

Q. (By the Master): When you say "in here," you mean the intermediate part of the cam shaft? A. The intermediate part of the cam shaft, in between the two bearings.

Q. (By Mr. Michael): Would the model T shaft warp in between the center and end bearings, for the same reason? A. Yes, but that would not warp so much so that we could not clean up the cams. That is the experience we have had in there in making those.

Q. At any rate, you did not straighten the "T" shaft with either the shaper or the Walcott machine? A. No.

Q. When you started with the Walcott machine, on the "A" shaft, you did straighten them? A. Yes, sir.

* * * * *

(1619) Re-Direct Examination by Mr. Farley.

Q. Do you know when the model T production stopped? A. May 15, 1927. Of course, we made a lot of model T cam shafts after that, for service.

Q. If the records, the time study records show that on the model T production, with the Walcott machines, and other men who had operated the Walcott machines stated, that they did use the straightening operation on the model T shaft, before they put in the Walcott machines, what would you have to say about that? A. No.

Mr. Spohn: If your Honor please, that is a very leading question to ask the witness, and putting the answer in his mouth.

Mr. Farley: The very same question was put, about time studies.

The Master: How positive are you about your statement, or how good is your memory, or your statement, that you did not have a straightening operation on the model T cams?

A. I am positive about that.

(1620) Q. With both the Walcott lathe and the shapers? A. Yes, either one.

The Master: That was true throughout your entire experience?

A. Yes, for two years.

Q. (By Mr. Farley): Did they make the model T for the two years while you were in that department? A. Yes, the production for the model T was still 2,000 a day, after the regular production had stopped.

Q. On the proposition of this straightening operation, your attention was called to operation No. 4, on this Exhibit 214. Now, between operation No. 4, which straightened the shafts, for turning the center bearing, after the center bearing was turned I noticed the next operation was "recess." What is that operation? A. That is cutting a ⅛ groove right alongside of the cam, to stop the cam from turning here along the longitudinal tool, and leave room to get in there and clean it up.

Q. That also faced the side of the cam? A. Yes.

Q. The next operation, No. 7, turn between cams— A. That is in between.

Q. Turning in between cams. Were all of them turned simultaneously? A. With one big tool block. It had six blocks in it.

Q. Would that operation (lathe), tend in any way, if the shaft had not been straight, and made straight by operation No. 4,—would that in any way tend to put it out of shape? A. The part was supported by the steady rest, after the turning **(1621)** there.

Q. The part was supported by the steady rest, after the turning there, due to the removal of the outer skin, and heating; would that in any way tend to make the shaft bowed again? A. I do not think we had this trouble. Well, I want to call your attention to this here, the difference between the model T and the model A; this calls for straightening—

The Master: Operation 4?

A. Operation 4.

The Master: On Exhibit 214?

A. That is right. On the model T, we had that identical same operation—in fact, on the same machine. There

was no difference between the two. We had this straightening for the center bearing. That was the very first operation after it came from the mill. And from there on, the center bearing, the end bearing and the front bearing was turned, and in every operation thereafter, that center bearing was supported by the steady rest.

The Master: Did you have anything to do with the introduction of the straightening operation in the model A shaft?

A. Yes.

The Master: Were you responsible for that?

A. Yes.

The Master: When did you decide to inaugurate that additional straightening operation?

A. It was the very first few weeks, when the job was set up, and tooled up.

Q. (By the Master): When it was still in the experimental stages? **(1622)** A. Yes. We made less than 10 a day.

By the Master:

Q. What was the experience that you had that prompted you to do that straightening operation? A. We gained time, and a lot of expensive repairs, on the turning of the machine, by putting one certain operation on there. That operation was rather expensive, and I had the O. K. to go ahead with it.

Q. What was there about the operation of the machine, before you added the straightening operation, that led you to believe that you would need to straighten these? A. We could not hold the cam in the machine itself, in the cam-turning lathe, because the center bearing went out too much—not the center bearing, but the intermediate part of the cams went out too much. Sometimes the cam would be clean up on top of it. When this tool came here, to clean that cam up, it would leave a black spot on the top of the cam, and parts in between the cam, rough forging marks. It was always on the part between the second and third and fourth and fifth, right in here (indicating). When we straightened this up, our problems were more or less eliminated, as far as the cam turning was concerned.

Q. You said you had two shapers to use in production in the plant, on the model T, right up to the end. A. Yes, until, I think, the Pioch and Melling cam came in, and then they were moved out. That was just after I got out.

Q. Did you use those shapers on the model A shaft?
(1623) A. No, they did not.

* * * * *

(1624) Mr. Farley: Your Honor, at the end of the hearing last night, I spoke to Mr. Spohn and Mr. Michael about, in order to save time, stipulating the testimony of Mr. Payne, on these reports that Mr. Wibel discussed. I assume you are still agreeable to that?

Mr. Spohn: Surely.

Mr. Farley: And, I will dictate a stipulation. You can make whatever corrections or changes you want, if you don't agree with it.

It is stipulated by and between counsel for the parties hereto that if Mr. Payne were called as a witness he would testify that in 1924 he was employed in the purchasing engineering department of the Ford Motor Company as an assistant to Mr. A. M. Wibel, now purchasing director of the Ford Company, and that at Mr. Wibel's request, and acting under his orders, he made an efficiency study of the Walcott cam lathes then in the plant of the Ford Motor Company, and being used there for the turning of the cams of the model T cam shaft;

That he personally prepared the sheets introduced in evidence as Exhibits W-1 to W-14, inclusive, and that the data given on said sheets was obtained by him from actual observation and checking of the machines whose brass-tag numbers are listed on the sheets, the brass-tag numbers being given in the **(1625)** first or left-hand column of each sheet;

That the second column of each sheet, headed, "No. Pieces," lists the actual number of cam shafts turned during the entire operating time of each machine;

That the third column entitled, "Hrs. Run," lists the actual elapsed running time of each machine;

That the figures given in the column entitled, "Mch. Trouble," lists for each machine the number of

hours during which each machine was stopped for machine trouble;

That the figures given in the column entitled, "No Tools," lists the amount of time each machine was stopped because no tools were available to replace tools that were removed for various purposes;

That the data given in the column "No stock" represents the number of hours the machine was stopped because no rough cam shaft forgings were available to be turned;

That the data given in the column entitled, "No oper.," lists the number of hours the machines were stopped because no operator was available to operate the same;

That the information contained in the column entitled "Remarks" sets forth the reasons why machines were stopped for the period of time in the fourth column entitled "Mch. Trouble," machine trouble;

That his period of observation extended from August 11, 1924, to November 1, 1924, and that each of the sheets represents the observation of a full week's work done at the Ford Company.

* * * * *

(1627) FRED HOVIS was thereupon recalled as a witness on behalf of the defendant herein, and having been previously duly sworn, testified further as follows:

RE-DIRECT EXAMINATION by Mr. Farley.

Q. Mr. Hovis, you formerly testified here? A. That is right.

* * * * *

Q. Now, how long have you been in the accounting department at the Rouge plant of the Ford Motor Company? A. Oh, I would say somewhere around 17, 18 years.

Q. Have you been at the Rouge plant during all of that time? A. All of that time, yes.

Q. That would have started your period of employment, then, at the Rouge plant around about 1921 or 1922? A. It was earlier than that. Your first question was how

long had I been in the accounting department, but I worked out there quite a little time before I was transferred to the accounting department.

Q. At the Rouge plant? A. That is right.

(1628) Q. Now, did you have, during the period from 1924, let us say, until 1928 or thereabouts, did you have any Time Study Department at the Rouge plant? A. Not to my knowledge.

Q. Under whose direction or supervision was the first Time Study Department at the Rouge plant inaugurated; who was first put in charge of the Time Study Department? A. Klopsic.

Q. Klopsic. And, prior to Klopsic, as far as you are aware, there was no Time Study Department over there at the Rouge, is that the idea? A. Not a regular Time Study Department.

Q. Now, I show you three sheets, which are marked Exhibits 16, 17 and Exhibit 281. I will ask you if you ever saw those sheets before (handing documents to witness). A. No, I haven't.

Q. Do you recognize those sheets as sheets employed or used at the Ford Company? A. Yes.

Q. Can you state from an inspection of them just what the sheets are? A. Well, I would say they are a list of operations with the Department in which the operations are performed showing at the left; there is a minute cost shown for each operation, and total minute cost. And, there are pencil figures there which were, no doubt, used for inventory purposes.

Q. Do those pencilled notations mean anything to you as for the department in which those sheets were used, and the purpose for which they were used? **(1629)** A. Yes. They were computations made on these sheets used in pricing inventory.

Q. Did you ever do any work of that type yourself? A. Yes.

Q. And, would any other department at the Ford Company, to your knowledge, have the information necessary for putting in the pencilled figures other than the accounting department? A. You mean the minute cost?

Q. I mean the pencilled figures. A. No.

Q. Take the pencilled figures at the extreme right-hand margin of the sheet. A. The accounting department

is the only department that would have cost figures, which those represent.

Q. Did you ever prepare any costs during this period, say, from 1925 to 1927 by the use of sheets similar to these, yourself? A. We have prorated cost, yes, by operations. Actual costs, of course, are figured on the regular cost card. These would be used merely to prorate that cost over operations.

Q. My question is, did you ever do any of that sort of work personally? A. Yes, sir.

Q. During this period of time, that is, from 1925 to 1928? A. I would say so; yes.

Q. As I understand it, you just testified that these pencilled figures were for the purpose of obtaining inventory prices for work in process? A. That is right.

Q. Did you know anything about the system, if it can be called such, (1630) that was in vogue at the Rouge plant for obtaining the minute costs as given in the typewritten column at the right of each of these sheets? A. Yes.

Q. Will you explain what it was, if you know? A. Well, we had no stop-watch time study at that time at the Rouge plant, and any information that would be arrived at for getting minute costs by operations would be merely by consulting someone actually performing the operations, or the foreman in charge.

Q. Now, for the purpose of obtaining actual costs to the Ford Company of a cam shaft, as these cards refer to cam shafts, do you in your department, or did you at any time in your department, use these operation sheets, Exhibits 16, 17 and Exhibit 281? A. To arrive at a cost?

Q. To arrive at an actual cost of a cam shaft. A. No, sir.

Q. What do you use for that purpose? A. Total production; total actual payroll hours.

Q. And that information you have on the cost summary cards which have been introduced in evidence here; is that correct? A. That is right.

Q. The cost summary cards being marked Exhibits D, and E-1 on to—I think Exhibit F-13 is the last. Now, are you familiar with the time study operation sheets of the Ford Company? A. Yes, sir.

Q. Do you know a man by the name of Victor Marentette? A. Yes, sir.

(1631) Q. Who is Victor Marentette? A. He is an employee of the Time Study Department at the present time working for Klopsic.

Q. I show you photostatic copy of a sheet marked Exhibit 14, and dated 10/8/24. Can you state what that is (handing document to witness)? A. Well, that is an operation sheet, or a time study sheet, but I can't tell from looking at this sheet just how these minute costs were arrived at.

Q. I call your attention to the initials "V. F. M." A. I would say that was Victor Marentette.

Q. And would the inclusion of those initials on that sheet enable you, as an accountant of the Ford Company, to recognize that as a stop-watch time study made by Marentette? A. I would say that it was; yes.

Q. Now, I call your attention to Exhibit M, and ask you if you recognize that as a— (handing document to witness). A. I would say that was a time study.

Q. I wonder if you would be good enough to compare the operations listed in Department 410 on these two sheets; first, would you take sheet, Exhibit 14, and—or, take Exhibit M, first, and state how many operations are listed on that sheet in Department 410. I just mean the total number of operations. The number of the operations is given in the— A. 45.

Q. Yes. —given in the column at the right of the sheet. Now, will you look at Exhibit 14, and see how many operations are listed? A. 46.

(1632) Q. Can you, by inspection of those two sheets, if you will look at them, find where the extra operation is? A. (Examining documents.) That is pretty hard; you see, they are not lined up the same at all; that is by number.

Q. Well, suppose you start on the first sheet of each, take your first operation in Department 410. A. Yes.

Q. Which is your first operation in Department 410 on Exhibit M? A. Operation 3 in both places is the "center both ends."

Q. Start there— A. Operation 4 is "rough straighten"; that is the same in both places. 5 is "rough turn 'C' center bearing"; that is the same in both places. 6 is "rough turn between cams."

Q. How about that? A. The same in both places. 7 is "straddle"; that is the same in both places. 8 is

"rough turn gear post"; that is the same. 9 is "drill 'L' hole"; that is the same. 10 is "turn end bearings." 11 is "rough grind center bearing." 12 is "shape cams" on Exhibit M; "straighten" on whatever this exhibit is.

Q. Exhibit 14. A. Exhibit 14.

Q. Is there any difference there? A. Yes. They are not the same. One is "shape cams."

Q. How about the next operation on Exhibit M? A. "Cyanide."

Q. Operation 12? A. Operation 12 is "shape cams."

Q. How about 13 on Exhibit 14? A. That is "turn cam lathe."

(1633) Q. Do you know whether or not the operation of "shape cams" and "turn cam lathes," is there any pertinence of those two operations, one to the other? A. Well, they sound as if they probably mean the same thing. I am not positive, of course.

Q. If we assume that the operation "turn cam lathes" and "shape cams" is for the same purpose of rough finishing the cams of the cam shaft, what do you have to say, then, as to the presence or absence of any additional operation? A. The additional operation is "straighten" on this exhibit here.

Q. Now, do you notice the time for the straightening operation on Exhibit 14? A. Half a minute; yes.

Q. Let me ask, Mr. Hovis, if your department in figuring costs gives any information at any particular time, stated intervals, or otherwise, to the executives of the company concerning costs of any particular parts that go into the car? A. Do you mean costs in the term of minutes?

Q. No, I mean costs in the term of dollars and cents. I mean, let us take, as we are talking about cam shafts here, assume the proposition that Mr. Martindale, or whoever handles your department, does he at any time give to the executives of the company, Mr. Wibel or Mr. Crawford, Mr. Sorensen, Martin, or any of them, the figures of what it is costing the company to produce a cam shaft? A. Yes, if they should ask for it. He doesn't—as a regular thing he just doesn't supply that information. There are too many parts. He supplies them with the total automobile cost by different types of models. If something should come up **(1634)** that they would be interested

in any particular part, and they wanted the cost of them, he would supply them with the cost.

Q. Now, I would like you to state whether the addition of a half minute of cost, as indicated by these two operation sheets, is a matter which would or would not come to the attention of the executives of the Ford Company? A. Yes, if there is an increase, it would. It would increase the cost, it would eventually increase the car, the cost of the car, and when there is an increase in the cost of the car, it has to be analyzed. They ask those questions, of course, where the increases are.

Q. What proportionate part of the cost of an entire automobile at the Ford Company would the half minute addition for straightening represent? A. Practically nothing.

Q. If, however, there were—let us assume, take your minute cost on the preparation of one of these cam shafts, we will take for round figures, to be, say, $2. Now, if there was a very major variation in that cost, as your department figures these costs, and it went up, we will say, to $4 rather suddenly, would that be a matter that you would be likely to call to the attention of the executives? A. Absolutely; sure.

Q. But, if the matter was in your charge, would you say whether or not you would get in touch with the executives concerning a half minute increase in cost on a part? A. Absolutely not.

Mr. Farley: I think that is all.

(1635) The Master: Is your department furnished with copies of all time studies made by the Time Study Department to date, to your knowledge?

A. Yes, sir.

The Master: How long has that been true?

A. Oh, I couldn't tell you exactly.

The Master: You don't know whether it has been true since the Time Study Department was organized or not?

A. I believe it has.

The Master: What does your department use the time study sheets for?

A. Oh, just for information for cost men to refer to. The actual time studies wouldn't be used in computing cost at any time unless there was a cost necessary to be compiled that would show operation cost. As far as compiling the cost is concerned, we could compile the cost, build up the cost of the automobile, without time studies.

The Master: Do you use the time studies for the same purpose for which these former studies made by your department were used?

A. In addition to that, these time studies are used by the foremen in the plant as a guide.

The Master: I am restricting it to your department. What does your department use it for?

A. I would say the only thing they use them in the cost department for would be to prorate cost for operations to price a particular part that may be sold or supplied, or fabricated in an unfinished state, or for pricing inventory in process.

The Master: And for no other purposes?

(1636) A. Time studies for operations on assemblies would be used for other purposes.

Q. (By Mr. Farley) That is a complete assembly? A. Yes. Because an assembly has to be built up with minor parts and minor assemblies, and this operation sheet would show, for instance, in the assembly how many screws or bolts were used, and how many parts would be required, for instance.

Q. When you say "this operation sheet," you are referring to Exhibit M? A. No, I am referring to an operation sheet for an assembly.

RE-CROSS EXAMINATION by Mr. Spohn.

Q. Mr. Hovis, Exhibit 281, on the top of it, has this language in parentheses: "(One used in T-5949 assy)." What does that mean? A. One cam shaft is used in this assembly. This, no doubt, is a motor assembly. I am not positive just what that represents now.

Q. What does that language mean as applied to this Exhibit 281 on which these minute costs are set forth? A. That means one part, one T-410 cam shaft is used in this assembly.

Q. What is an assembly T-5949? What does that mean? A. I am not sure; but I believe it represents an engine assembly. That is where the cam would be used.

Q. And, doesn't that language rather mean that the information contained on Exhibit 281 here may be used to price that cam shaft used in that assembly? **(1637)** A. You mean the total cost? You mean these minutes shown here?

Q. Yes. A. No. That doesn't mean that the minutes to be used in compiling the cost.

Q. Supposing that you are going into the change of your cam shaft, and you are going to add new operations. A. That is right.

Q. Your cost summary cards do not show cost by operations, do they? A. No, they don't.

Q. Now, get back to the time from 1924 to 1928, or thereabouts, when you say you had no time studies. A. Yes.

Q. Go back to the time you put out the model A car. A. Yes.

Q. How would you then determine, if you did determine, the cost of the new A cam shaft? A. By taking the total production and the total hours, regardless of operations.

Q. Didn't you make a study of that cost before you ever put them into production to get an estimated cost of that for your own purposes? A. Well, I couldn't say whether they do or not.

Q. Didn't you testify, or did I understand you incorrectly, when you said that these operation sheets of the type of Exhibit 281 are used sometimes in assembling costs when you want to find out and prorate operations? A. No, I say the operations are used for a build-up assembly of a cost; it is just for an assembly; not a part.

(1638) Q. What do you mean by an assembly? A. Take a door assembly. You would write up an operation sheet like this for a door assembly. You would have the outside panel, and the door lock, and the two pillars, and the header and striker plates, and so forth; so many screws, upholstering, possibly, window glass, and so forth. These operations would show how many of these screws are used; would show the symbol number of the glass, the symbol number of the pillar, and so forth. Now, on another set,

on a regular cost build-up set, we would have this assembly number, hours, and all the parts that go in there, and the names and the quantity required, but no minutes.

Q. Now, going back to the time you went on the production of the "A" motor, that assembly would include a cam shaft, wouldn't it? A. That is right.

Q. And, in this assembly cost you are speaking of, you would have a cam shaft set down there, wouldn't you? A. That is right.

Q. And, would that be done before or after production actually started, that assembly cost? A. I would say it would be done after production actually started.

Q. Wouldn't you have any idea what that car was going to cost you before you would build it? A. Not necessarily. Somebody may make an estimate based on, possibly, a model T, based on some—if somebody just wanted a rough estimate. But, we often figure estimates probably based on past experience, or just an estimate in the whole for somebody's information; but, an actual cost isn't compiled **(1639)** until you actually start producing the part.

Q. And, you have no estimate yourself even before the part is built? A. As I say, they probably have an estimated cost based on past experience in building a similar part.

Q. Then, these assembly sheets you refer to aren't cost studies at all? A. What do you mean?

Q. All they are is a list of operations, but they don't reflect any cost? A. Sure they do. The amount required for each part, you can't figure the cost in until we get the cost. For instance, in an assembly we have all the parts that go into the assembly of the motor. Included in there is one cam shaft. It is listed here. After we have completed a month in which this assembly was produced, and also the cam shaft, we assemble the cam shaft in there at the actual cost of the cam shaft based on total production and total hours; not operations. We don't use time studies at any time to compile a cost.

Q. So that your time studies, then, are never tied in with your cost department at all, are they, for the purpose of defining cost? A. Not for the purpose of defining cost, no. They are tied in with the cost department insofar as now they take stop-watch time studies in regard to the hours that are consumed.

Q. That is all this Exhibit 281, with the pencil figures on it, was used for, as I understand your testimony; if some part, or unfinished part, were sold, this Exhibit 281 was used to determine the cost, is that right? **(1640)** A. Something similar to that.

Mr. Farley: May I have that question please, and answer?

(Question and answer read by the reporter.)

Q. (By Mr. Spohn): And, Exhibit 281 was used, as you testified, for the purpose of preparing your inventories? A. Yes, that is right.

Q. And those inventories are regularly carried as part of the Ford records, are they not? A. That is right.

Q. And form the basis—it is one of the elements they must take into consideration in regularly computing the income of the defendant company? A. That is right. I want it understood that these minute costs are used as a basis of proration for actual cost. These minutes, as shown in here, weren't used to compile cost in the beginning, any more than time studies are today, stop-watch time studies.

Q. You wouldn't have a cost summary, would you, for an unfinished part? You only get your cost when your part is finished? A. That is right.

Q. So, if you did not use something like Exhibit 281, you could never price an unfinished part in your cam shaft department? A. That is right. That is why we used it.

Q. So, if it is necessary to have goods in process in your inventory, you could only use Exhibit 281 at the day of its date for the purpose of finding that? A. That is right.

Q. And those inventories, of course, are used on your Federal income tax returns? A. Yes, sir.

(1641) Q. And, that pricing was there used on that inventory of goods in process? A. Yes.

Q. And, wherever the defendant company had to determine a cost of a cam shaft that was unfinished for any purpose whatsoever, you had to rely on Exhibit 281 as of the day of its date to get that? A. That is right.

Q. And, you did that? A. That is right. We did that because costs were not compiled, actual costs by operations.

Q. Now, Mr. Hovis, as I understood your testimony, you say there was no regular Time Study Department at the Rouge plant from 1924 to 1928? A. I don't know the exact date that Klopsic was transferred out from Highland Park, and when he was, why, they established a regular Time Study Department, but I couldn't say the exact date that he came out.

Q. In any event, then, from 1924 up to the date Mr. Klopsic came over to the Rouge plant to put in the Time Study Department, there was none in the Rouge plant? A. No; not a stop-watch Time Study Department.

Q. Was there any kind, whether you call it stop-watch Time Study Department or not? Was there any kind of a Time Study Department over there? A. No.

Q. They had one at the Highland Park plant, though, did they not? A. I didn't work at the Highland Park plant, and I wouldn't want to say for sure, but I believe they did.

(1642) Q. Well, do you know? A. I believe that was Mr. Klopsic's work out there, and when he was transferred out here, he carried on with the same work.

Q. Do you know— A. (Interrupting) No, I am not positive.

Q. Just a moment. Do you know whether or not any actual time studies were made at the Rouge plant from 1924 up to the time Mr. Klopsic came, whether they had any regular department or not? A. No, they didn't.

Q. Do you know that of your own knowledge? A. Well, I know that the Time Study Department always has come under the accounting department head, and I know that minute costs or time studies that were taken such as of this particular Exhibit 16 were taken by cost clerks and employees of the cost department, by going out, as I testified before, and consulting the machine operators, or the foremen in the department.

Q. Now, you didn't know very much about Mr. Klopsic's department over at the Highland Park plant here? A. No.

Q. Before he came over to the Rouge plant; did you? A. I did not know much about it, no.

Q. As far as your information goes, Mr. Klopsic may have come over to the Rouge plant and made time studies, even though his department was over in Highland Park?

A. Well, it is possible, but not probable, I would say, because I am in the accounting department myself, and working on cost continually, why, the same as if he would have been out making **(1643)** time studies for the accounting department, why, I would have known something about it. It is possible, though.

The Master: Didn't you ever consider the possibility of using the time studies made by Klopsic in the Highland Park plant instead of inquiring directly of the foremen and workmen on the various machines as to the time for operations?

A. You mean didn't we consider using time studies made by Klopsic at Highland Park at the Rouge plant?

The Master: Yes. Your manufacturing processes were very similar.

A. Very similar, but they were entirely two different plants; kept records almost separate, you might say, two accounting departments, two cost departments, under different heads. Carnegie was at one time at the head of the accounting and cost department at Highland Park, and a man by the name of Brubaker was in charge of the cost department at the Rouge plant, and there never was any occasion where, for instance, Brubaker would go to Carnegie and ask him for a time study to use at the Rouge plant.

Mr. Spohn: That is all, Mr. Farley.
Mr. Farley: Just a minute, Mr. Hovis.

Re-Direct Examination by Mr. Farley.

Q. Do you happen to know who actually determines the price at which a new car will be sold in the Ford Company? What particular official, or just how is that— A. Sets the selling price, the list price?

Q. Yes. A. I would say Mr. Crawford.

(1644) Q. And just before, for example, you came out with the last models, the last line, do you know anything about how Mr. Crawford went about determining those prices? A. No, I don't. I know we compiled a lot of information, the cost department. As I say, when a new model comes out, the way models change now, for instance, a great many parts are the same. If there is a change in

design, why, it is estimated largely on the basis of a part similar. There isn't anything else to base an estimate on.

Q. During the period immediately prior to announcing the price on the new line, the head of your department, Mr. Martindale, gets in consultation, and he and Mr. Crawford spend quite a long period of time? A. That is right.

The Master: What is Crawford's position?

Mr. Farley: He is assistant to the president.

Q. (By Mr. Farley) And, prior to these meetings, which you know Crawford and Mr. Martindale are going to have, you know the men in your department are very busy engaged compiling what data you can, and turning it over to Mr. Martindale? A. That is right.

Q. In fact, you work on that yourself, don't you? A. Occasionally. On the overhead end of it.

Q. Now, just one other question, in view of the cross examination about Exhibit 16. Do you know any information that there was in the Ford Company by means of which you could get or establish **(1645)** the cost of any particular operation? Do you remember that question? A. Yes.

Q. I would like to ask this, first, Mr. Hovis. You know the purpose of these proceedings here? That is, you prepared a statement? A. That is right.

Q. And, you know the importance, we will say, of establishing as accurately as possible the cost of this one particular operation? A. Yes, sir.

Q. The turning of the cams of the cam shaft? A. Yes, sir.

Q. What would you say as to whether or not you would use, as an accountant, the information contained on any of these sheets, Exhibits 16, 17 and Exhibit 281, for the purpose of determining or establishing that cost? A. I would say that they were not, by any means, accurate enough to be used to establish an actual cost on that particular operation, or any other operation.

Q. And, if you wanted to establish that cost as accurately as possible, how would you determine it? A. I would have an accurate time study taken; stop-watch time study taken when production is normal.

Q. And, if you are able to find records which were established to be actual time study operation sheets, would

you use those to compile the cost in preference to the Exhibit 281, which is a duplicate of Exhibit 15, attached to Exhibit "C," and Exhibits 16 or 17? **(1646)** A. Use the actual time study in preference to Exhibits 16 or 17.

Mr. Farley: That is all.

The Master: You said you personally made some of these, or compiled some of these operation sheets?

A. That is right. I wouldn't say I compiled these exact sheets, here.

The Master: Do you recall what parts, or some of the parts for which you compiled similar sheets?

A. No, I don't; not at this time.

The Master: Do you recall the method you used in compiling such sheets?

A. The method we used was by taking the time study as shown here, which would total down to a certain number of minutes, and comparing those minutes with the actual minutes for the particular month used, and arriving at a percentage there for different methods used at different times.

The Master: Did you ever go out for the first time before there ever was any previous time study in the files to determine the time it took to perform the operations of making one part?

A. No, I never did that myself.

The Master: You had never had occasion to do that?

A. I never went out and actually contacted the foremen or the men, to arrive at these minutes.

Q. (By Mr. Farley) You never did that personally? A. No, I never did that personally.

Q. Let me ask you this, so far as these computations in pencil are concerned, which you testified was for the purpose of inventorying work in process, have you found that method **(1647)** sufficiently accurate for your inventory purposes? A. Yes; it always has been.

The Master: Do you sell much work in process or many parts that are not finished parts?

A. No, we don't.

The Master: When do you have occasion to sell them?

A. Very rarely do we sell an unfinished part. I can't think right now of any time that we would have occasion, but I believe that once in a while for certain occasions that we may take a part and have it partly finished, more for samples than anything else, and ship it over to Ford Motor Company, Canada, which will get those parts in the same way. Of course, we have to price them, though, on account of the duty, and so forth, but there would be just a few of each item. We sell a large quantity of bar steel billets, and so forth.

Q. (By Mr. Farley) But, you have a regular cost? A. We have a regular cost for that. That doesn't have to be prorated by any operation sheet.

Q. Then, for the few parts you do send out, let us assume, getting back again to the particular part we have under discussion here, let us assume you are going to send over to Ford Motor Company, of Canada, a partially finished cam shaft such as is shown in Exhibit 29, and you would send very few of them, let us say, a half dozen, or three or four, would the approximation of cost such as you have on Exhibit 16 be sufficiently accurate for that purpose? A. I believe so, yes, the same as pricing the inventory.

Q. Do you know of any instance in your own personal knowledge, **(1648)** Mr. Hovis, where your cost department, prior to the situation which has arisen in this case, has ever found it necessary to get an actual cost on a single operation of 45 or 50 that go into making any particular part? A. No, I don't know of any case where it has been necessary to get an actual accurate operation cost at any time.

Q. In the 18 or 20 years you have been in the Ford Company? A. That is right.

Mr. Farley: That is all.

Re-Cross Examination by Mr. Spohn.

Q. Now, Mr. Hovis, I understand your testimony to be that you have never prepared, yourself, the data from which Exhibits 281, 16 and 17 are examples by going out into the shop yourself and talking to the foremen, or somebody else under you? A. That is right.

Q. Then, how do you know those aren't right? A. I didn't say they are not right by any means. I say they are estimates. Any time you go out and talk—it is just reasonable to assume this, any time you go out and talk to an individual operator of a machine, and say how many of these can you make in an hour, and he gives you this information, that that isn't as accurate as when you go out and take a stop-watch and get off at a distance and watch this man working at normal speed.

Q. Now, Mr. Hovis, you know, do you not, that during some of these years of this accounting, a stop-watch time study was not made for nine months at a time? A. You say I know that? No.

(1649) Q. Do you know that? A. No, I never took any stop-watch time studies.

Q. You don't know anything about them? A. I never took any stop-watch time studies. I wouldn't say. I don't know anything about them; no.

Q. If the fact is that you have some of the periods during this accounting, even after a time study department was established, nine months were allowed to elapse before a new time study was made— A. Yes.

Q. —and, in the meanwhile, operation sheets, like Exhibits 16, 17 and 281 were prepared from talking with the foremen, which is more liable to be more accurate as of the day of the date that you want to determine the total minutes in those operations? A. I would say that the mere fact that no actual stop-watch time study was taken for nine months wouldn't mean by any means that the last time study that was taken wasn't accurate, because when there is a change, when there is any change of any kind that is going to change the minutes, the time study department is notified and a new sheet is written up. The fact there hasn't been any change would lead you to believe that it is accurate. There has been no change.

Q. So, you want to be understood as testifying, then, that a time study taken in 1924, if there were no changes in operations, would show the same amount of time consumed in the operation as it would, say, in 1939? A. No. 1924 to 1939—

Q. What is the difference between nine months and fifteen years, if there is no change in operations? **(1650)** A. Difference in the parts, I assume.

Q. I said assume no change in operations. A. I don't believe we have a condition where the same time study would be used that long from 1924 to 1929. It is possible—

Mr. Farley: 1939.

A. 1939, yes. They get around and take time studies more often than that.

Q. (By Mr. Spohn) Mr. Hovis, you do not know of your own knowledge what information was given to the persons who compiled the minute costs set forth on Exhibits 281, 16 and 17? A. No, I do not.

Q. And for all you know, the information may have been accurately given by the foreman in these departments, may it not? A. No, I—

Q. For all you know about it? A. Just a minute, now. I just don't want to say offhand for all I know if that is not so. If I don't think so, I don't want to say that. The fact these minutes totalled down—I haven't had a chance to check it—if these minutes total down to a figure less or more than the actual minutes for the part, then I wouldn't say that for all I know these are accurate. I would say that they are not accurate.

Q. Which is accurate, the actual— A. The accurate is the actual production, and the actual hours that have been paid for. That is the accurate figure. That is the actual minute cost. If these total down to a different figure, I wouldn't say these are correct.

Q. Let me understand your testimony correctly. Then, if the Ford Motor Company records that are here in evidence show **(1651)** that the actual time paid for on these shop records differs from the time study, then the time study is wrong? A. No, I wouldn't say that.

Q. Are the production records more accurate than the time studies, then? A. The total minutes.

Q. The total minutes are? A. The total minutes can't help but be accurate.

Q. Mr. Hovis, I show you now Exhibit H-8, production record for the month of July, 1929. I call your attention on the top of that production sheet in parenthesis is time study 37.6722 (handing document to witness)? A. That is right.

Q. And, on the bottom of the sheet, as I understand it, there is an actual figure of—what is that? A. 41.9199, I think it is.

Q. Is that 41.9199? A. That is right.

Q. And, is that 41.9199 the actual average for the month? A. That is the actual average for the month, yes.

Q. And, you will notice that those minute costs daily figures vary considerably in that exhibit? A. Yes, they would, sure.

Q. Which is more correct, the time study or these production figures, minute costs? A. For this particular month, this is the actual figure. These hours represent money that has been paid for, and it is the actual production. Now, the reason that this time study is put on here, on this same sheet, is for the foreman's information. **(1652)** When he looks at this sheet and sees that his minutes are 41.91, and an honest time study has been taken of 37.67, he knows where to concentrate his time, and make an attempt to bring this 41 minutes down to the 37.

Q. Well, when you say this figure is— A. 41.9199.

Q. Now, turn to Exhibit H-14, where you have the same time study figure for the month of January, 1930, of 37.6722, and you have an actual production figure of minutes of 33.8618; is that right? A. That is right.

Q. So that there you have an actual cost below the time study record? A. That is a different part. One is A-6250, and one is A-6250-A-1.

Q. Let us get the same part, then. On Exhibit H-12, it is the same part, isn't it, A-6250? A. It looks to be.

Q. And there you have a minute cost of 37.3938 actual, is that right? A. Yes.

Q. And that is below the time study— A. Yes.

Q. —that is below the time study of 37.6722? A. That is right.

Q. Which is more accurate there? A. Well, just as I say, this is the actual. There isn't any more accurate than an actual.

Q. Now, then, the actual represents the paid-for labor, does it not? **(1653)** A. That is right.

Q. Isn't the statement of a foreman as to his production, when he has before him his blackboards to keep track of production, why shouldn't that be just as accurate as a time study? A. Lot of reasons. It is just human nature for a foreman, or a man working on the job, to be a little off on his figures. That is all. It is just natural that a man's memory, and so forth, isn't as good as an actual stop-watch.

Q. Well, you used to have blackboards in this department, didn't they, for actual production? A. I am sure I couldn't tell you. I would imagine they would have, yes. I have seen blackboards in foremen's departments, and so forth.

Q. If they have blackboards on which they recorded every shaft that was turned during a given shift,— A. Yes.

Q. —that would be accurate, wouldn't it? Should be? A. As far as production is concerned?

Q. Yes. A. As far as production is concerned, yes. No doubt the production would be the same. It is the hours that make the difference; the time that they tell you they do these things in.

Q. So that, if in this turning department they actually had blackboards, and the foreman, when he gave these figures to the man who made up Exhibits 16, 17 and 281, the foreman has pretty good information, hasn't he? A. He has as far as production is concerned, but where is the foreman going to get the hours applied against this particular **(1654)** operation unless he estimates it?

Q. He has the number of hours in the shift? A. But they charge the hours against the symbol number; not against the operation. Just like shown on this Exhibit 202 here, if he is going to tell at the end of the day, or when somebody comes and asks him how much time has been spent on a particular operation, he is going to try to estimate it.

Q. Do you know anything about the blackboard system? A. I know they had blackboards for production. I don't remember seeing any hours on them.

Q. That is all you saw, blackboards for production? A. That is right.

Mr. Spohn: That is all.

RE-DIRECT EXAMINATION by Mr. Farley.

Q. I show you Exhibit H-1, that is the Form 2202-B you were just referring to. A. 2202, yes.

Q. That particular H-1 exhibit is for a part T-410, and it is dated November, 1927, is that right? A. That is right.

Q. And it gives an average minute cost for the department for the entire month of November, does it not? A. That is right.

Q. And, it gives an average minute cost of 35.4595? A. That is right.

Q. Now, will you compare that with Exhibit 281. What is the total **(1655)** minute cost on Exhibit 281 for the part T-410? A. It is 23.051.

Q. What is the total minute cost as shown by the actual production figures? A. 35.4595.

Q. And, the two times there are within one month of each other; this is December 21, 1927, and this is, as I understand, the system for the actual cost of producing the "T" shafts in that department during the month and at the end of the month of November, 1927? A. That is right.

Q. Now, having in mind your reply to Mr. Spohn's question, if the total minutes on Exhibit 281 were out with the actual cost, what is the situation with respect to the total minutes as shown on Exhibit 281, and the actual production figures; do they conform, or is one out, or what? A. I would say that the actual, of course, shows the larger number of minutes.

Q. The actual shows a total of 35 minutes, and the estimated Exhibit 281 shows 12 minutes less time for the entire operation? A. That is right.

RE-CROSS EXAMINATION by Mr. Spohn.

Q. Mr. Hovis, on this same Exhibit H-1, you will notice up at the right you have "Last month and best month"; do you notice that? A. That is right.

Q. And, the best month of the minutes of operation total was **(1656)** 18.8704, do you see that? A. Yes.

Q. Which is lower than the 23.051 in Exhibit 281? A. That is right.

Q. So that the foreman's figures may be an average figure, may they not, to reflect the best with the worst? A. It might happen to work out that way; yes.

Mr. Spohn: That is all.

The Master: That is all.

(Witness excused.)

Mr. Spohn: Now, will you call Mr. Franklin?

Mr. Farley: Yes.

* * * * *

United States Circuit Court of Appeals

FOR THE SIXTH CIRCUIT.

THE GORDON FORM LATHE COMPANY,
Plaintiff-Appellant and Cross-Appellee,

vs.

FORD MOTOR COMPANY,
Defendant-Appellee and Cross-Appellant.

EQUITY No. 4564.

APPEAL FROM
THE DISTRICT COURT OF THE UNITED STATES,
EASTERN DISTRICT OF MICHIGAN,
SOUTHERN DIVISION.

TRANSCRIPT OF RECORD.

VOLUME III.

Defendant's Record (Continued),
Appendix to Record and Appeal Papers.

LECHER, MICHAEL, WHYTE & SPOHN,
110 East Wisconsin Ave., Milwaukee, Wisconsin,

RICHEY & WATTS,
Union Commerce Bldg., Cleveland, Ohio,

SWAN, FRYE & HARDESTY,
Ford Bldg., Detroit, Michigan,
Attorneys for Plaintiff-Appellant and Cross-Appellee.

BODMAN, LONGLEY, BOGLE, MIDDLETON & FARLEY,
1400 Buhl Bldg., Detroit, Michigan,

COOPER, KERR & DUNHAM,
Woolworth Bldg., 233 Broadway,
New York, New York,
Attorneys for Defendant-Appellee and Cross-Appellant.

INDEX.

VOLUME I.

Trial Papers, Plaintiff's Record and Part of Defendant's Record.

Caption 1

Decree on Mandate 2

Report of Special Master 4

I. Nature of Invention and History of Litigation and of Defendant's Use of Machinery 5

II. Claims of Parties 9

III. Accounting Period, and Production of Shafts on Infringing Machines: Question of Notice 11

A. Beginning of Period 11

B. Production of Camshafts and End of Accounting Period 15

IV. Profits 17

A. Profits from Infringement 18

1. Standard of Comparison 18

a. Standard for Model A Shaft 21

(1) Pioch and Modified Walcott Machines 21

(2) Westinghouse Lathe 24

(3) Ford Cam Shaper 28

b. Standard for Tractor Shaft 34

c. Effect of Choice of Incorrect Standard ... 35

2. Savings from Use of Infringing Machines ... 36

a. Savings or Loss in Other Operations: Straightening 40

b. Savings in Cam-Roughing Operation 42

(1) Direct Labor Savings 42

(a) Speeds of Production on Model T Shaft 43
(b) Speeds of Production on Model A Shaft 44
(c) Speeds of Production on Tractor Shaft 46
(2) Other Savings: Overhead or Burden 47
(3) Offset of Loss from Scrapping Shapers 59
3. Apportionment of Profits..... 60
V. Damages: Reasonable Royalty..... 71
A. Conditions to Assessment of Reasonable Royalty 73
B. Amount of Royalty..... 74
VI. Questions of Clean Hands and of Increase of Recovery 81
A. Clean Hands 81
B. Increase of Recovery..... 84
VIII. Interest 93
Schedule A. Production of Camshafts on Infringing Machines 94
Schedule B. Proration of Production on Camshafts between Pioch and Walcott Machines, May 14, 1930 to March 15, 1931, inclusive..... 97
Schedule C. Comparative Costs on Cam-Roughing Operation with Walcott Lathes and Standards of Comparison 99
Clerk's Notice of the Filing of the Master's Report..... 101
Plaintiff's Objections to Master's Report..... 101
Exceptions of Defendant to the Report of the Special Master 103
Motion for Action Upon Master's Report and Objections Thereto 111
Affidavit of Todd L. Moise..... 111

Schedule I 115
Schedule II 115
Schedule III 115
Schedule IV 115
Notice of Motion for Action Upon Master's Report..... 117
Opinion of the Hon. Arthur J. Tuttle, District Judge, on the Objections to the Master's Report..... 118
Master's Order for Statement of Account, dated July 6, 1937 132
Exhibit A—Defendant's Statement of Account, filed September 27, 1937 138
Exhibit 7. Operation Sheet No. 1..... 151
Operation Sheet No. 2..... 152
Operation Sheet No. 3..... 153
Operation Sheet No. 4..... 154
Operation Sheet No. 5..... 155
Exhibit 10. Material Price Card No. 1..... 156
Material Price Card No. 2..... 157
Exhibit 11. Computation of Certain Items of Cost of Gordon Lathe Operation on Tractor Camshafts 158
Exhibit 12. Computation of Certain Costs Involved in Rough Grinding Operation on Tractor Camshafts by Landis 10 x 36 Grinders during Period July 1, 1925 to January 1, 1928..... 160
Exhibit B—Amendment to Defendant's Statement of Account, verified December 31, 1937..... 161
Ptf. Rec. Vol. III beginning line 18, page 29 of Typewritten Transcript (Mr. Spohn)..... 166
Master's Order for Statement of Account, dated October 29, 1937 169
Exhibit C—Defendant's Further Statement of Account, dated December 31, 1937..... 171
Ptf. Rec. Vol. III from page 34, line 26 to page 37, line 3 inclusive of Typewritten Transcript (Mr. Spohn).. 193

TRANSCRIPT OF TESTIMONY
(Designated by both Plaintiff and Defendant).

Appearances 195

PLAINTIFF'S RECORD.

FRED M. HOVIS (Defendant's Witness):
Cross Examination by Mr. Spohn..... 195
Cross Examination by Mr. Farley..... 208
Re-Cross Examination by Mr. Spohn..... 212
Re-Cross Examination by Mr. Farley..... 214
Re-Cross Examination by Mr. Spohn..... 216

HAROLD M. WOEHRLE (Defendant's Witness):
Cross Examination by Mr. Spohn..... 216
Re-Cross Examination by Mr. Spohn..... 220
Cross Examination by Mr. Spohn..... 227
Re-Direct Examination by Mr. Farley..... 239
Re-Cross Examination by Mr. Spohn..... 242
Re-Direct Examination by Mr. Farley..... 244

FRED M. HOVIS (Recalled):
Cross Examination by Mr. Spohn..... 244

HAROLD M. WOEHRLE (Recalled):
Cross Examination by Mr. Spohn..... 246
Cross Examination by Mr. Farley..... 249

NORMAN R. SCOVILL (Defendant's Witness):
Direct Examination by Mr. Farley..... 253
Cross Examination by Mr. Spohn..... 254

TODD L. MOISE (Plaintiff's Witness):
Direct Examination by Mr. Spohn..... 255
Cross Examination by Mr. Farley..... 258
Re-Direct Examination by Mr. Spohn..... 273
Re-Cross Examination by Mr. Farley..... 274

CHARLES GORDON (Plaintiff's Witness):
Direct Examination by Mr. Spohn..... 275
Cross Examination by Mr. Farley..... 280
Re-Direct Examination by Mr. Spohn..... 282
Cross Examination by Mr. Farley..... 283

LYLE E. BROUGHTON (Plaintiff's Witness):
Direct* Examination by Mr. Spohn..... 291

HOWARD JONES (Plaintiff's Witness):
Direct Examination by Mr. Spohn..... 296
Cross Examination by Mr. Farley..... 300
Re-Direct Examination by Mr. Spohn..... 302
Re-Cross Examination by Mr. Farley..... 303

MILES G. SLONIKER (Plaintiff's Witness):
Direct Examination by Mr. Spohn..... 304
Cross Examination by Mr. Farley..... 308

DEFENDANT'S RECORD.

CHARLES GORDON (Plaintiff's Witness):
Cross Examination by Mr. Farley..... 312

TODD L. MOISE (Recalled) (Plaintiff's Witness):
Cross Examination by Mr. Farley..... 423

---

* The Examination of Lyle E. Broughton by Mr. Spohn, appearing on page 291, was incorrectly stated in the Typewritten Transcript. It should be "Direct" instead of "Cross."

VOLUME II.

Defendant's Record (Continued).

MORRIS E. SHAWKEY (Defendant's Witness):
Direct Examination by Mr. Farley..... 427

SPENCER W. LIBBY (Defendant's Witness):
Direct Examination by Mr. Farley..... 436
Cross Examination by Mr. Spohn..... 444
Re-Direct Examination by Mr. Farley..... 454
Re-Cross Examination by Mr. Spohn..... 457

MORRIS E. SHAWKEY (Recalled) (Defendant's Witness):
Direct Examination by Mr. Farley..... 461

MIKE KLOPSIC (Defendant's Witness):
Direct Examination by Mr. Farley..... 464

RALPH T. MYERS (Defendant's Witness):
Direct Examination by Mr. Farley..... 481

VICTOR F. MARENTETTE (Defendant's Witness):
Direct Examination by Mr. Farley..... 486
Cross Examination by Mr. Spohn..... 493

A. M. WIBEL (Defendant's Witness):
Re-Direct Examination by Mr. Farley..... 495

CHARLES GORDON (Plaintiff's Witness):
Cross Examination by Mr. Farley..... 511

THEODORE R. DAHL (Defendant's Witness):
Direct Examination by Mr. Farley..... 512

GEORGE W. SMITH, JR. (Defendant's Witness):
Direct Examination by Mr. Farley..... 526

ALBERT APTEKAR (Defendant's Witness):
Direct Examination by Mr. Farley..... 529
Cross Examination by Mr. Michael..... 545
Re-Direct Examination by Mr. Farley..... 559

WILLIAM D. HUNT (Defendant's Witness):
Direct Examination by Mr. Farley..... 559
Cross Examination by Mr. Spohn..... 564
Re-Direct Examination by Mr. Farley..... 567
Re-Cross Examination by Mr. Spohn..... 567
Re-Direct Examination by Mr. Farley..... 567

HENRY G. PILLINGER (Defendant's Witness):
Direct Examination by Mr. Farley..... 568
Cross Examination by Mr. Spohn..... 579
Re-Direct Examination by Mr. Farley..... 585
Re-Cross Examination by Mr. Spohn..... 586

JOHN L. SCHMIDT (Defendant's Witness):
Direct Examination by Mr. Farley..... 588
Cross Examination by Mr. Spohn..... 605

RUDY EHRHARD HERKLOTZ (Defendant's Witness):
Direct Examination by Mr. Farley..... 606

WILLIAM F. PIOCH (Defendant's Witness):
Direct Examination by Mr. Farley..... 632
Cross Examination by Mr. Michael..... 663
Re-Direct Examination by Mr. Farley..... 697
Re-Cross Examination by Mr. Michael..... 722
Re-Direct Examination by Mr. Farley..... 727

NIELS BOESEN (Defendant's Witness):
Direct Examination by Mr. Farley..... 728

ALANSON P. BRUSH (Defendant's Witness):
Direct Examination by Mr. Farley..... 752
Cross Examination by Mr. Michael..... 801
Re-Direct Examination by Mr. Farley..... 813
Re-Cross Examination by Mr. Michael..... 820

ERVIN FRANKLIN (Defendant's Witness):
Direct Examination by Mr. Farley 825
Cross Examination by Mr. Spohn 843
Re-Direct Examination by Mr. Farley 846
Re-Cross Examination by Mr. Spohn 846
Re-Direct Examination by Mr. Farley 846
Re-Cross Examination by Mr. Spohn 847

JOSEPH HENRY ACHTEN (Defendant's Witness):
Direct Examination by Mr. Farley 847
Cross Examination by Mr. Michael 856
Re-Direct Examination by Mr. Farley 859

FRED HOVIS (Recalled) (Defendant's Witness):
Re-Direct Examination by Mr. Farley 863
Re-Cross Examination by Mr. Spohn 869
Re-Direct Examination by Mr. Farley 874
Re-Cross Examination by Mr. Spohn 877
Re-Direct Examination by Mr. Farley 881
Re-Cross Examination by Mr. Spohn 882

VOLUME III.

Defendant's Record (Continued),
Appendix to Record and Appeal Papers.

HAROLD W. HOGELAN (Defendant's Witness):
Direct Examination by Mr. Farley 883
Re-Direct Examination by Mr. Farley 889

PIERCE ALBERT WEYL (Defendant's Witness):
Direct Examination by Mr. Farley 891
Cross Examination by Mr. Michael 911
Re-Direct Examination by Mr. Farley 913
Re-Cross Examination by Mr. Michael 918
Re-Direct Examination by Mr. Farley 920
Re-Cross Examination by Mr. Michael 924

JAMES McEVOY (Defendant's Witness):
Direct Examination by Mr. Farley 925
Cross Examination by Mr. Michael 932
Re-Direct Examination by Mr. Farley 935

ALBERT APTEKAR (Recalled) (Defendant's Witness):
Re-Direct Examination by Mr. Farley 936
Re-Cross Examination by Mr. Spohn 939
Re-Cross Examination by Mr. Michael 940
Re-Direct Examination by Mr. Farley 942
Re-Cross Examination by Mr. Michael 943
Re-Direct Examination by Mr. Farley 945

I. JOSEPH FARLEY (Defendant's Witness):
Direct Testimony 951
Cross Examination by Mr. Michael 956

JOHN W. MICHAEL (Plaintiff's Witness):
Direct Testimony 962
Cross Examination by Mr. Farley 965

NORMAN R. SCOVILL (Defendant's Witness):
Re-Direct Examination by Mr. Farley 971

HAROLD M. WOEHRLE (Defendant's Witness):
Re-Direct Examination by Mr. Farley..... 980

WILLIAM F. PIOCH (Defendant's Witness):
Re-Direct Examination by Mr. Farley..... 1051
Re-Cross Examination by Mr. Michael..... 1055
Re-Direct Examination by Mr. Farley..... 1059
Re-Direct Examination by Mr. Farley..... 1060
Re-Cross Examination by Mr. Michael..... 1061
Re-Direct Examination by Mr. Farley..... 1063
Re-Cross Examination by Mr. Michael..... 1063
Re-Direct Examination by Mr. Farley..... 1063
Re-Cross Examination by Mr. Michael..... 1064
Re-Direct Examination by Mr. Farley..... 1064
Re-Cross Examination by Mr. Michael..... 1065

HAROLD M. WOEHRLE (Defendant's Witness):
Re-Direct Examination by Mr. Farley..... 1065
Re-Cross Examination by Mr. Spohn..... 1071
Re-Direct Examination by Mr. Farley..... 1080

DONALD M. RUSSELL (Defendant's Witness):
Direct Examination by Mr. Farley..... 1082

HAROLD M. WOEHRLE (Defendant's Witness):
Examination by the Master..... 1094
Re-Direct Examination by Mr. Farley..... 1095
Re-Cross Examination by Mr. Spohn..... 1096

ALEXANDER OBERHOFFKEN (Defendant's Witness):
Direct Examination by Mr. Farley..... 1097
Cross Examination by Mr. Michael..... 1114
Re-Direct Examination by Mr. Farley..... 1122
Re-Cross Examination by Mr. Michael..... 1124
Re-Direct Examination by Mr. Farley..... 1126
Re-Cross Examination by Mr. Michael..... 1127
Re-Direct Examination by Mr. Farley..... 1129

HENNING OHRN (Defendant's Witness):
Direct Examination by Mr. Farley..... 1130
Cross Examination by Mr. Michael..... 1137
Re-Direct Examination by Mr. Farley..... 1150

CHARLES HAJOVICH (Defendant's Witness):
Direct Examination by Mr. Farley..... 1151
Cross Examination by Mr. Michael..... 1159

ALBERT KIPTA (Defendant's Witness):
Direct Examination by Mr. Farley..... 1165
Cross Examination by Mr. Michael..... 1167

WILLIAM D. HUNT (Recalled) (Defendant's Witness):
Re-Direct Examination by Mr. Farley..... 1171
Re-Cross Examination by Mr. Michael..... 1174
Re-Direct Examination by Mr. Farley..... 1182

CHARLES GORDON (Recalled) (Plaintiff's Witness):
Re-Direct Examination by Mr. Michael..... 1183
Re-Cross Examination by Mr. Farley..... 1198

TODD L. MOISE (Recalled) (Plaintiff's Witness):
Re-Direct Examination by Mr. Spohn..... 1210
Re-Cross Examination by Mr. Farley..... 1240
Re-Direct Examination by Mr. Spohn..... 1258

APPENDIX

TO TRANSCRIPT OF RECORD

Designated Portion of the Testimony of the Witnesses Otto H. Schultz, Frank Steinke, Bert Weisel, William Cunningham, and Charles Gordon from Plaintiff's Exhibit 14—Patent Office Record, Interference No. 47,200—Herman W. Melling vs. Charles Gordon and Alfred Redlin.

OTTO H. SCHULTZ:

Q. 1, page 132, to and including Q. 22 and Answer, page 136:

Direct Examination by Mr. Earl..... 1261

Q. 45, page 140, to and including Q. 72 and Answer 145:

Direct Examination by Mr. Earl..... 1264

BERT WEISEL:

Q. 1, page 190, to and including Q. 55 and Answer, page 198:

Direct Examination by Mr. Earl..... 1268

XQ. 84 and Answer, page 203:

Cross Examination by Mr. Dennett..... 1274

XQ. 100, page 205, to and including XQ. 102 and Answer, page 206:

Cross Examination by Mr. Dennett..... 1274

XQs. 115 and 116 and Answers, page 210:

Cross Examination by Mr. Dennett..... 1275

XQ. 121, page 211, to and including RDQ. 150 and Answer, page 219:

Cross Examination by Mr. Dennett..... 1276

Re-Direct Examination by Mr. Earl..... 1281

RDQs. 153 and 154 and Answers, page 220:

Re-Direct Examination by Mr. Earl..... 1282

RDQ. 166, page 222, to and including RDQ. 177 and Answer, page 224:

Re-Direct Examination by Mr. Earl..... 1282

RDQ. 183, page 224 to and including RXQ. 193 and Answer, page 226:

Re-Direct Examination by Mr. Earl..... 1284

Re-Cross Examination by Mr. Dennett..... 1284

RRDQ. 207 and Answer, page 229:

Re-Re-Direct Examination by Mr. Earl..... 1285

FRANK STEINKE:

Q. 1, page 230, to and including RDQ. 66 and Answer, page 238:

Direct Examination by Mr. Earl..... 1286

Cross Examination by Mr. Dennett..... 1289

Re-Direct Examination by Mr. Earl..... 1291

WILLIAM CUNNINGHAM:

Q. 1, page 288, to and including Q. 16 and Answer, page 293:

Direct Examination by Mr. Earl..... 1292

XQ. 19, page 293, to and including XQ. 43 and Answer, page 298:

Cross Examination by Mr. Dennett..... 1295

RDQ. 44 and Answer, page 299:

Re-Direct Examination by Mr. Earl..... 1299

CHARLES GORDON:

Q. 56, page 402, to and including Q. 57 and Answer, page 403:

Direct Examination by Mr. Dennett..... 1300

Q. 66, page 405, to and including Q. 74 and Answer, page 409:

Direct Examination by Mr. Dennett..... 1300

XQ. 188, page 441, to and including XQ. 190 and Answer, page 442:

Cross Examination by Mr. Earl..... 1303

Master's Report in *National Tube Company v. Mark et al.*, Equity No. 4360 1305

Proceedings in Court 1305

Proceedings Before the Master 1306

Conceded Facts 1307

The 1909 Order 1308

Answers to Questions Referred 1309

Gains and Profits 1310

Savings 1312

Advantages Derived by Defendant From and Through Said Infringement 1315

License 1319

Special Damages 1321

Damages 1322

Interest on the Award 1325

Judge Sater's Opinion on Exceptions to Master's Report in *National Tube Company v. Mark et al.*, Equity No. 4360 1326

Special Master's Report, on Accounting of Profits, Opinion and Order, and Opinion and Order on Standard of Comparison in *O'Neal v. San Jose Canning Co.*, Equity No. 1307 1333

Special Master's Report on Accounting of Profits 1333

Master's Opinion and Order 1336

Special Master's Opinion and Order on Standard of Comparison 1340

Opinion of the Circuit Court of Appeals for the Sixth Circuit in *Gordon Form Lathe Co. v. Walcott Machine Co.*, No. 5511, Decided April 12, 1929, 32 Fed. (2d) 55 1344

Opinion of the Circuit Court of Appeals for the Sixth Circuit in *Gordon Form Lathe Co. v. Ford Motor Co.*, Nos. 7363, 7364, Decided January 12, 1937, 87 Fed. (2d) 390 1358

Final Judgment 1365

Notice of Appeal of Plaintiff..... 1369

Bond on Appeal of Plaintiff..... 1370

Plaintiff's Statement of Points To Be Urged on Appeal.... 1371

Notice of Appeal of Defendant..... 1373

Bond on Appeal of Defendant..... 1375

Defendant's Statement of Points To Be Relied On Upon Appeal under Rule 75(d) of Rules of Civil Procedure... 1376

Stipulation Re Waiver of Supersedeas Bond..... 1379

Stipulation Concerning Number of Copies of Record to be Filed on Appeal..... 1379

Stipulation Re Exhibits and Transcript of Record on Appeal in *Gordon v. Ford,* Nos. 7363-4..... 1380

Order Re Exhibits and Transcript of Record on Appeal in *Gordon v. Ford,* Nos. 7363-4..... 1381

Stipulated Designation of Contents of Plaintiff-Defendant Composite Record on Appeal..... 1382

Stipulation Extending Time to July 29, 1941..... 1399

Order Extending Time to July 29, 1941..... 1399

Stipulation (filed July 21, 1941) Extending Time to September 27, 1941, and Approval of U. S. Circuit Court of Appeals 1400

Stipulation (filed September 24, 1941) Extending Time to October 27, 1941..... 1401

Stipulation Extending Time to November 26, 1941, and Approval of U. S. Circuit Court of Appeals..... 1402

Certificate of Clerk..... 1403

VOLUME IV.

Plaintiff's Exhibits, Defendant's Exhibits and Main Record Exhibits.

PLAINTIFF'S EXHIBITS.

Exhibit		Page
D.	Cost Summary Card for A-6250 Camshaft covering January and March 1930 and September and October 1929	1404-5
E.	Cost Summary Card for A-6250 Camshaft covering May, August and October 1930 and March 1931	1406-7
E-1.	Cost Summary Card for A-6250 Camshaft covering March, May and July 1929. (Same as Exhibit 6 in Exhibit A)	1408-9
F.	Cost Summary Card for T-410 Camshaft covering January to June 1923	1410
F-1.	Cost Summary Card for T-410 Camshaft covering July to November 1923	1411
F-2.	Cost Summary Card for T-410 Camshaft covering January to June 1924	1412
F-3.	Cost Summary Card for T-410 Camshaft covering July to November 1924	1413
F-4.	Cost Summary Card for T-410 Camshaft covering April to September 1925	1414
F-5.	Cost Summary Card for T-410 Camshaft covering October to November 1925	1415
F-6.	Cost Summary Card for T-410 Camshaft covering January 1926 to October 1929	1416-17
F-7.	Cost Summary Card for T-410 Camshaft covering November 1928	1418
F-8.	Cost Summary Card for T-410 Camshaft covering October 1930	1419
F-9.	Cost Summary Card for A-6250 Camshaft covering August 1928 to January 1929	1420-21

EXHIBIT PAGE

F-10. Cost Summary Card for A-6250 Camshaft covering December 1927 to June 1928.....1422-23

F-11. Cost Summary Card for F-446 Camshaft covering April to September 1925..... 1424

F-12. Cost Summary Card for F-446 Camshaft covering October to November 1925..... 1425

F-13. Cost Summary Card for F-446 Camshaft covering January 1926 to March 1928.....1426-27

H-1. Production Cost Record for T-410 Camshaft covering November 1927..... 1428

L-1 to L-3. Pages from note book kept by witness Spencer W. Libby 1429-31

M. Operation Sheet compiled from notations appearing in Exhibit L. (Same as Exhibit 13 attached to Exhibit C) 1432-33

N. Operation Sheet for T-410 Camshaft dated 10-8-24. (Same as Exhibit 14 attached to Exhibit C).....1434-35

O. Correspondence between Ford Motor Company and Jackson Shaper Company.....1436-63

P-1 to P-14. Ford Work Orders for Repairs to Melling Lathes 1464-70

Q. Inventory card covering Ford Camshaft Shaper #10706 1471

R. Inventory card covering Ford Camshaft Shaper #11628 1472

S. Inventory card covering Ford Camshaft Shaper #12205 1473

W-1 to W-14. Study of operation of Melling Lathes....1474-87

X-1. Productive Labor and Overhead for Department 410 6-1-25 1488

X-2. Same—continued to 2-28-31 1489

X-3. Productive Labor and Overhead for F-446 Camshaft Machining 6-1-25 to 3-31-28 1490

EXHIBIT PAGE

Y-1. Inventory Card covering Melling Cam Turning Lathe Ford #36592 1491-92

Z-3. Plaintiff's statement of account.....1493-1513

Z-4. Plaintiff's schedule showing computation of depreciation on Model T type cam shapers and Melling Cam Lathes 1514-16

Z-5. Plaintiff's compilation of depreciation cost on Model T Cam Shapers and Melling Cam Lathes.....1517-18

Z-6. Plaintiff's computation of Maintenance and Overhaul Expense 1519-22

Z-7. Plaintiff's computation of Cost of Tools.....1523-24

CC. Telegram dated 11-18-30 addressed to Ford Motor Company 1525

DD. Telegram dated 11-18-30 1526

GG. Release to White Motor Company from infringement of Gordon patent. (Included in Exhibit RR). 1540

HH. Letter of White Motor Company to Mr. John W. Michael dated 12-24-29. (Included in Exhibit RR). 1532

RR. Gordon Form Lathe Company agreement file.....1527-57

DEFENDANT'S EXHIBITS.

209. Copy of U. S. Patent No. 1,655,655 of January 10, 1928 to Herman W. Melling.....1558-66

217 to 222. Ford Purchase Orders for Melling Cam Turning Lathes 1567-73

232. White Motor Company Departmental Correspondence dated 12-17-31..... 1574

233. Same—dated 1-29-30 1575

254. Ford Motor Company print dated 11-17-13 showing front view of construction of original Ford Cam Shaper with attachment superimposed in yellow.... 1576

255. Same—end view 1577

Exhibit		Page
257.	Ford assembly print showing attachment for use in shaping Model A Camshafts	1578
258.	Same—sub-assembly	1579
259.	Same—showing removal of tools numbers 1 and 5	1580
263.	Sketch drawn by witness Pioch	1581
264.	Letter of Mr. Pioch to Mr. Farley dated 11-2-38	1582
266.	Computation by witness Pioch	1583
268.	Print Camshaft Shaping Machine Oberhoffken design—layout showing "tools to cut in both directions—speeds being equal"	1584
269.	Same—Layout to show individual relief of tools on return stroke	1585
272.	Sketch by witness Brush showing cutting action of Shaper Tool	1586
273.	Same—showing cutting action of Melling Tool	1587
276.	Brush sketch of two way cuts	1588
281.	Operation Sheet for T-410 Camshaft dated 12-21-27. (Same as Exhibit 15 in Exhibit C)	1589-90
289 (1 to 10).	Engineering Record of T-410 Camshaft, Forging Size	1591-95
290 (1 to 13).	Same—Finished Size	1596-1602
291 (1 to 3).	Engineering Record for A-6250 Camshaft, Forging Size	1602-03
292 (1 to 4).	Same—Finished Size	1604-05
293.	Ford print 9-Z-32, Shaper Tool	1606
294.	Ford print 9-Z-215, Melling Tool	1607
295.	Letter of witness Pioch dated 2-1-39 re: Surface Speeds of Shaper Tools	1608-09
296.	Sample Ford Purchase Order	1610
297.	Print of Ford Camshaft A-6250-A1	1611

EXHIBIT PAGE

298 (1 to 6). Engineering Record Fordson Tractor Camshaft, Forging and Finished Size.....1612-14

299. Summary of Ford Tractor Production..... 1615

301. Defendant's substitute pages for plaintiff's statement of account Exhibit Z-3 making 3 changes....1616-22

302. Same—6 changes 1623-29

304. Pages from Ford Parts Price List, effective 2-1-31 1630-33

305. Defendant's computation of Comparative Direct Labor Costs on F-446 Tractor Camshafts.....1634-35

306. International Harvester Company Requisition for Gordon Lathe dated 11-20-19..... 1636

307. International Harvester Company order for Gordon Lathe dated 11-24-19 1637

308. International Harvester Company installation of machinery card covering "Gordon Std. Cam Turning Machine" 1638

309. International Harvester Company disposition of machinery card covering same 1639

312. Copy U. S. Patent No. 1,512,995 of 10-28-24 to Herman W. Melling 1640-47

313. Copy U. S. Patent No. 1,634,550 of 7-5-27 to Herman W. Melling 1648-52

314. Print #C-2129 of Walcott Machine Company—"Assembly of New Style Parallel Type Tool Head" 1653

315. Print #KT-530-A of Walcott Machine Company—"Assembly of Tool Head" 1654

MAIN RECORD EXHIBITS.

Exhibit		Page
2.	Copy of U. S. Patent No. 1,542,803 of 6-16-25 to Chas. Gordon *et al.*	1655-69
5.	Amended Final Decree in Walcott case	1670-72
40.	Notice of Infringement dated 7-1-25	1673
41.	Cuts only of Walcott Machine Company advertising pamphlet	1674-75
42.	Mailing List	1676-83
48.	1929 Notice of Infringement	1684-86
52.	Photograph of Ford Shaper ¾ front view	1687
53.	Same—front view	1688
53-b.	Illustrated chart of Ford Shaper tool movements and actions	1689
55.	Record re: delivery of Gordon machine to Ford	1690
56.	Copy of Ford order for Gordon machine	1691-92
61.	Affidavit of I. W. Kindall re: Ford Camshaft Shaper	1693
62.	Ford Motor Company Print dated 5-18-15 showing Ford Camshaft Shaper, front view	1694
63.	Same—end view	1695
64.	Walcott letter to Ford 7-30-29	1696
71.	Copy of General Motors-Gordon Company Agreement. (Included in Exhibit RR)	1552-57
154-a, b, c, d.	Records produced by Ford in response to Court order	1697-1700

(1667) HAROLD W. HOGELAN was thereupon called as a witness on behalf of the defendant herein, and having been first duly sworn, testified as follows:

DIRECT EXAMINATION by Mr. Farley.

Q. Where do you live, Mr. Hogelan? A. 2647 Alter Road, Detroit.

Q. And, what is your occupation? A. I have charge of the cost department.

Q. Of what company? A. Hudson Motor Car Company.

Q. What is the system used at Hudson Motor Car Company for determining costs, and let us, in view of the fact the proceedings here have to do with the production of cam shafts, I wonder if you could tell the Court—you are familiar with what a cam shaft is? A. Yes, sir.

Q. I wonder if you could tell the Court just how you would go about in the Hudson Company establishing cost on this particular piece, or a piece similar to the one I am now showing you, which is a finished cam shaft for the Ford model B car, and which is marked Defendant's Exhibit 33. A. You mean as a cost department head what I would determine?

Q. Just what your particular system is at the Hudson Company at the present time, and what it has been through the years, insofar as establishing costs? A. The time study department would give me a time study card, with a complete cost of machining a cam shaft.

Q. Now, do you keep in your department separate costs on all of the parts that go into the car? **(1668)** A. No, sir.

Q. How do you, at Hudson's, determine your figure of cost? A. We figure our cost on the basis of an automobile; complete automobile.

Q. And, do you keep from month to month the cost of the separate parts, such as cam shafts? A. Unless the time study price changed, we wouldn't change the cost of the car.

Q. Now, suppose you were asked right now as to the cost in, let's say, the month of December, 1927, we will say, of a cam shaft, or producing a cam shaft at the Hudson Motor Car Company; would you have any records avail-

able, or would records have been available for you to find out what that cost was?

• • • • •

(1670) A. Yes, sir. We would have a cost of that cam shaft in 1939, as what it cost us in 1927 for service price only.

Q. For service price only? A. That is right.

Q. Now, what type of records, or what is your system at the Hudson Company for establishing costs in your department? A. Well, we know what we pay for the material. We have a purchase order and a cost card for the material. The time study department sends us down a complete machining cost, not by operation, but a complete cost of machining. We know what our overhead **(1671)** is in that department, and that compiled together makes our cost.

Q. Now, do you have any check, or do you establish your cost in the department merely from a time study card, or do you get actual production figures at the end of the month, or the end of the day from the department and the actual amount of hours of labor that were spent in the department? A. We get a production report at the end of each week for the number of motors built for that week. And, every motor has a cam shaft in, so we knew we built so many cam shafts, or we built so many motors.

Q. You get a report, then, from the whole department, which makes the motors, is that the idea? A. That is right.

Q. And they give you a record of just how many motors were made? A. That is right.

Q. Do you get any individual records as to all of the various parts that went into the motor; the cam shaft, the crankshaft, the valves? A. No, sir.

Q. Do you keep any separate record of that cost at any time of all of these various parts? A. Only at the start of the season when we come into production for a new part, we work up a part to set our service prices with, and in case of a supplier offering to bill a certain part for less than we make in our plant, we will make a cost to see whether we can make it cheaper than we can buy it. Other than that, we do not.

Q. Now, on the proposition of the service cost, or service sales, **(1672)** you say you would get the price of a cam shaft from your service sales department, as I understood it, at the present day, if you wanted to find the cost of a cam shaft in 1927. Was that your testimony, did I understand correctly? A. Will you repeat it?

(The last question was thereupon repeated by the reporter.)

A. No, if we built the cam shaft in 1927, and it was laying in our service stock, we would have a cost in our department of a cam shaft.

Q. Now, would that be the cost of producing it, or the cost at which the article is set, the sales price, the price at which you sell it? A. Yes, sir.

Q. It would be the sales price, the price at which you sell it? A. It would be the cost; what it cost us to make it.

Q. I see. And, that is the cost which you established, as I understood your testimony, then, at the very beginning of the production of the model? A. Yes, sir.

Q. And that price or cost is established by a time study; is that the idea? A. Furnished to us—from a production time sheet furnished to us by the time study department; as we transfer that stock from production over to service at the start of the year, so that we have them in stock for replacement.

Q. Now, that time study furnished to you, as I understood your testimony, would give, however, the lump sum cost of the complete cam shaft? **(1673)** A. Yes, sir.

Q. Now, do you have at any time available to you any data or written record that would give the cost of a number of operations? Assuming, just for the sake of this question, that it took, we will say, 65 or 70 separate and distinct operations to produce this particular cam shaft, Exhibit 33, do you have in your cost accounting system any way of determining the cost of each one of those separate operations? A. No, sir.

Q. Have you ever kept any records of that type? A. No, sir.

Q. Would you as a—I understand you are in charge of the cost accounting at the Hudson Company? A. Yes, sir.

Q. Would you recommend to the company that they keep such a record? A. I would recommend that they do not keep such a record.

Q. Why would you recommend that they do not keep such a record? A. Because there is no use for it in the cost of building an automobile.

Q. How long have you been engaged in this cost accounting work, Mr. Hogelan? How long have you been with the Hudson Company? A. Well, I have been with the Hudson Motor Car Company 14 years.

Q. 14 years. And, doing cost accounting? A. Yes, sir.

Q. Have you ever had an occasion in that 14 years to determine the exact cost of a single operation of a part such as this which is made by the use of 60 different operations (indicating)? A. No, sir.

* * * * *

(1675) Q. Now, with respect to these time studies that you get from the **(1676)** department, how long do you preserve those actual physical time study cards? A. We keep them until the part becomes obsolete.

Q. And, when does the part become obsolete? A. When it is not used in the preceding model that is coming out.

Q. That is, if you had a cam shaft such as this one—we will assume for the sake of the question that this would be an "A," what would be designated as A-6250 cam shaft for the Ford Model A; now, in your system, as soon as you change the model, and change that particular part, you would, then, throw away all your time studies, is that the idea? A. Yes, sir.

Q. At the Ford Motor Company, Mr. Hogelan, they use a Form of the type shown in Exhibit H (indicating), and, one of these Forms are used for each separate part that goes into the car, that is produced by the Ford Company. This Form, as you note, gives the part number, the name of the part,—and, showing the way the Form is filled out, I show you Exhibit H-1, which is a similar form, but of an earlier date than Exhibit H, and that gives the part number. It would be T-410, and the name cam shaft, and the date, and the department, whatever designation the

department has. Now, you notice it gives the dates of the month, running 31 days and the shifts, and the hours, the shift production, the total production, and the total hours, and various other information; minute costs, number of pieces of scrap, and all that sort of thing. Do you use a record of that type at Hudson Company? **(1677)** A. No, sir. That seems rather complicated.

Q. Now, after these cards are prepared and—the system is at the Ford plant they send them to the accounting department, and then the accounting department, from time to time, makes out cards of the type shown in Exhibit G, a cost summary card. I will show you just one of those cards. I think if you will see the card you will no doubt understand it a little better. We have here, this is Exhibit F-3, a cost summary card for the T-410 cam shaft. That was the cam shaft used on the model T. Now, you will notice on this card for July, 1924, we had the department 410, another department 819, both of which departments had to do with the various operations, and it gives the production for the month, the total production for the department, and then it gives a labor cost and a burden cost. Now, this labor and burden cost are prepared according to the system at Ford's from the—is that Form 2202, Mr. Hovis?

Mr. Hovis: The Ford Company uses 2202 for the basis of the cost summary cards.

Q. You understand the system I just outlined? A. Yes. I see it on here, too.

Q. Do you keep a record of that type at the Hudson Company? A. No, sir. All we keep a record of for that part is for material cost, the labor cost, and the time we were making it in the current production, and the overhead of the department it was made in. That is for service only. For production, we do not keep any cam shaft cost whatsoever.

Q. Do you have at the Hudson Company, Mr. Hogelan, any record similar to this operation sheet, Exhibit M? **(1678)** A. Not in the cost department. All we know is the total cost at the bottom for machining the cam shaft.

Q. Do you know whether they have records of that

type anywheres? A. They carry them in the time study department while the part is current.

Q. Do you know how long those are preserved? A. Until the part becomes obsolete, and then they throw it away.

Q. Now, as a cost accountant, Mr. Hogelan, would you state what would be your personal practice if you got a cost of a single operation and, let us say to make it pertinent, an operation of roughing the contours of the cams as is shown by the cam shaft, Exhibit 234, and let me show you also another exhibit here, Exhibit 29. Exhibit 29 shows a shaft in condition for the operation of removing the excess stock off the cams, and putting the shaft in the condition such as shown in this Exhibit 234. Suppose you had a production machine for doing that particular job, and you had obtained the time from your time study department for that particular operation, and there was no change in the part or the machine, we will say, for a period of four or five years; would you take the time study given to you at the beginning of the period as sufficiently accurate to establish the cost during the four or five-year period, assuming there was no change made in the part, and no change made in the machine? A. Would the parts still be in production?

Q. Yes. The part maintaining the same operation on the same machine, running right straight along, and continues production during a four or five-year period? A. Well, I would say if the operations on the machining of the **(1679)** cam shaft didn't change; but, if any of the items such as the handling of this part that was in the department in the process which, due to reconstructing a conveyor and so forth, which might change the price, otherwise, we wouldn't.

Q. Assume the operation of that machine remains standard. A. There is only one thing that would enter this, and that would be the labor conditions where the rate per hour would be changed.

Q. Of course, that should be taken into consideration, of course. A. When we change our base rate upon which our time studies are set, then we would change the price of the piece; other than that, we wouldn't. Because, our

time studies are based in hours. We are not interested in dollars and cents, as far as the shop is concerned, for machining this. It is hours.

Q. If you happened to have some U. A. W. difficulties, that might change the situation materially, too? A. We have a lot of that.

* * * * *

(1696) Re-Direct Examination by Mr. Farley.

Q. Do you understand as an accountant, Mr. Hogelan, what it would mean to make a group of machines in the plant for doing one separate operation, let us say, on a cam shaft, a cost center—you understand what I mean by that? That is, to separate your cost so that, assuming we have a battery, we will say, of ten or twelve or fourteen machines, let us say, performing this specific operation of turning the cams of the cam shafts, to use those as a cost center, computing the area of space in the plants which they occupy and then allocating all of your overhead or burden costs to each separate battery or group of machines all throughout the plant on that sort of a basis, so as to separate your burden and all your other costs to each particular operation—you understand what I mean? A. Yes, sir. We center our burden to the entire motor.

Mr. Spohn: What was the answer; I didn't get that?

The Master: "We center our burden to the entire motor."

(1697) Q. (By Mr. Farley): Do you think it would be feasible, or would you recommend to your company that they adopt this segregated system of costing? A. No, sir. For this reason: That we are only interested in the cost of building an automobile, and not any individual parts.

Q. And would the same answer apply, for example, to job costs? That is, it is practically the same question, but, just simply phrasing it in different language, that instead of selecting a group of machines as a cost center, that you allocate your costs, let us say, on a job on the cam shaft, separating it, or segregating it and having costs to which you allocate burden and everything else of that type to

each particular part of a car? A. No. We have division center such as a motor, transmission, clutch, paint shop, trim shop, body building, and, we allocate all the parts relative to those groups to that split-up.

For instance, all the parts in a motor, whether it is a piston, crank shaft, or a cylinder block, carries the same overhead, as long as it is built in the motor division. No matter what it is, if it carries the share of burden in proportion to the direct labor that is on that part.

Q. Do you think it would be profitable to your company to make a separation or segregation of the type I have just mentioned? A. I do not. I do not.

Q. You would not, therefore, recommend to your company that they adopt any such system? A. I would not.

Q. Now, considering, for instance, the difference in early **(1698)** production between the Ford Company and the Hudson Company, do you think it would be profitable for the Ford Company to adopt such a system?

Mr. Spohn: If your Honor please, that is a pretty drastic conclusion to ask of the witness.

Mr. Farley: That is exactly an answer given by Mr. Moise on one of my questions on cross examination, that if the Ford Company would be profited if they adopt such a system.

Mr. Spohn: Well, didn't counsel ask the question?

Mr. Farley: All right. I am entitled to have an answer here as I was from Mr. Moise. The only difference being here that we have a disinterested witness.

Mr. Michael: I take exception to that.

Mr. Farley: Take all the exception you like. It is the truth, and you know it.

The Master: I think you might re-frame your question to ask the witness—

Mr. Farley (Interposing): Very well, if your Honor please. After all, you have the burden of attempting to separate the chaff from the wheat, and, I would be very much appreciable, if, considering the things that you have to decide upon, you will ask the question to decide any problems you might have in your own mind.

The Master: Well, would you have an opinion whether or not it would be advisable for the Ford Motor Company, with its larger production, to—

(To the reporter): Will you read back the last few questions of Mr. Farley, and the answers by the witness, Mr. Reporter?

(1699) (The record was then read by the reporter.)

The Master: Well, do you have an opinion as to whether or not the Ford Company, with its larger production, ought to adopt such a system, or whether or not it would be advisable for it to do so?

A. My own opinion would be this: That it would be a tremendous undertaking to try to keep it when I don't think it is necessary to arrive at a cost of an automobile.

Mr. Farley: Do you think it would be of any value after you got it?

A. No, sir.

* * * * *

Pierce Albert Weyl was thereupon called as a witness on behalf of the Defendant, and having been first duly sworn, testified as follows:

Direct Examination by Mr. Farley.

Mr. Farley: Mr. Hogelan is excused, I assume?
The Master: That is right.

Q. (By Mr. Farley): Your full name, please? A. Pierce Albert Weyl.

Q. Where do you live, Mr. Weyl? A. In Dearborn, Michigan.

(1700) Q. And you are employed by the Ford Motor Company? A. Yes, sir.

Q. How long have you been employed by the Ford Motor Company? A. Since 1927.

Q. In what department of the Ford Motor Company are you employed? A. In the engineering department.

Q. Which particular engineering department? A. Well, in design of the automobile and what we call a car engineering department.

Q. That is Mr. Shelldrick's department? A. Yes, sir.

Q. And, in addition to the car engineering department, they have also at the Ford Motor Company another engineering department under the supervision of Mr. Pioch? A. Yes, sir.

Q. And what does Pioch's department have to do with it, if you know? A. Well, Pioch is tool design, they design tools and dies, to use in machine tools in the shop for production.

Q. Whereas, your department, or Shelldrick's department, in which you are employed, has to do solely with the design and engineering of the automobile and the parts that go to make up the entire automobile? A. That is right.

Q. Now, what system, if any, do you have in Mr. Shelldrick's department to make a record of, or to take care of changes and design of a car, or parts of a car? A. We have one, what we call our engineering release system, and our model change on which we make handwritten or typed copy **(1701)** from our parts list. And, from that, an indelible is made, and, anywheres from 30 to 60 copies of that indelible are run off on a duplicator machine, and distributed to the various departments that are interested, purchasing and tool design, the department in the shop that is going to make the part, and the outside vender, if it is partially machined, or if it is forged before we receive it, the vender also gets a copy. The same procedure is followed through on changes and revisions that we make.

Q. Yes. A. Although it is carried on different form.

Q. Those cards to which you refer are commonly referred to around the plant as "Engineering Information"? A. That is right, "E. I."

Q. And, as I understand it, you have a separate card for each and every part that goes into the car, with, of course, the possible exception of what we might call standard bolts and nuts and screws, and things of that type, you wouldn't have to have a card for ⅜ths bolts, would you? A. Yes, sir, we have a card for everything.

Q. Is that so? A. Yes, sir.

Q. I am surprised to learn that. I didn't know that. A. Yes. On the smaller parts we have a card,

like on the 3/8 bolts, they will specify for a certain unit. On our parts list, we break that down to the application, to the units that are fastened together.

Q. I see. If you have 65 or 175 bolts of the same size, type and construction to be used in the part, you wouldn't have 65 **(1702)** cards for it? A. No.

Q. You would have one card that would say 65 parts? A. Yes.

Q. Well, now, are you familiar with those particular cards? A. Well, quite a bit, yes. I have handled that work for about a year on all of these new models we have had.

Q. I show you a group of cards (handing cards to the witness), and ask you if you can state first, are they regular records of the Ford Motor Company? A. This record has been discontinued, I don't know just in what year. This used to be used entirely as a summary of all the individual changes and releases, but we don't summarize it like this any more.

Q. Well, I would like to have you again just to keep in mind my question. Is that a regular record of the Ford Company? A. Yes, it is.

Q. You recognize that? A. Yes, I recognize that.

Q. As a matter of fact, these engineering cards were given to you this morning? A. Yes, sir.

Q. From the Ford Company? A. Yes, sir.

Q. Well, not this group of cards, because I had them here a day or two before, but just what parts do these cards refer to? A. This is a cam shaft model T-410.

Q. And those cards cover the construction of the T-410 cam shaft **(1703)** from the 26th day of November, 1907, on into and through to the—what date? A. December 7, 1926.

Mr. Farley: I wonder if your Honor would like to take a look at those for a minute?

The Master: Yes.

(Mr. Farley then handed the cards to the Master.)

Q. (By Mr. Farley): Now, those particular cards are—I don't know whether you noticed it—but they are entitled "Finish Drawing," and I have here a group of photostats. A. Yes.

Q. And the group of cards consists of 7 cards. Now, I show you another group of cards (handing cards to witness), which are entitled "Forging Drawing, T-410." A. That is right.

Q. And this second group of cards, which consists of card No. 1, card No. 2, card No. 3 and card No. 4 and card No. 5, cover what period of time? A. January 10, 1908, to October 21, 1926.

Q. Now, I take it that for parts of that particular type you have, therefore, two sets of cards; one set of cards covering the forging, and one covering the part in its finished condition? A. That is true.

Q. And as changes are made from time to time in either the forging or the finished shaft, all of such changes are made a matter of record on those cards, is that correct? A. That is true.

Q. Now, could you, by consulting the model T cards make a quick survey of the finished drawing cards, of the number of changes **(1704)** made in the period from 1907 until the end, in the construction of the part? A. (Referring to cards): It is approximately 56 different changes in construction.

The Master: May I see those?

The Witness: Yes, your Honor. (Handing cards to the Master.)

Q. (By Mr. Farley): Could you, by consulting the card of the model T-410, determine whether or not any of the changes that are noted on the card were made for the purpose of facilitating production? A. (Referring to cards): Mostly—I can pick them out by the men who requested the change.

Q. How? A. Pick them out by the men who requested the change, the authority of the change on here; the changes not requested by men in the engineering department came from the shop.

Q. Do you find any such changes noted? A. Yes, sir.

Q. How many? A. (Referring to cards): I think there is 12 here.

Q. So, then, 12 out of 50 some changes that were made on the model T cam shaft in that period of time were changes requested by the production department. Now,

is there anything—well, of course, that shows there was nothing particularly unusual in that practice? A. No, there was nothing unusual.

Q. Well, will you consult the card—I think as long as we are going to put photostatic copies of these in evidence, that I **(1705)** would like to have you refer to the particular changes, by whom they were requested, so that we may know just exactly how you decided that?

The Master: In other words, you want him to state—

A. (Interrupting): Authority, the name of the man.

Q. Yes. How you reached the conclusion you just gave in your last answer.

The Master: Of the 12 that were made by the men in the shop.

A. Yes. Now, there is one by Martin. There is another one by Martin; Banta, Degener, three more by Banta, one by Perini, another one by Degener; there was one by Wandersee; another one by Degener; here is one by Endict; one by Rouse; one by Thrall.

Q. I notice one on this card, No. 3, on the back of it, 6/24/19, by P. E. Martin. You didn't refer to that particular one. A. Well, the reason I didn't refer to that was because P. Martin comes in the engineering department quite a bit, although he isn't in the engineering department. I mean I am just picking out the ones from authority that didn't originate in the department. P. E. Martin—

Q. (Interposing): P. E. Martin is in charge of the department, in charge of production? A. Yes, sir.

Q. Now, let's see, that particular change is brought up to date by specifying these shafts to be copper-plated? A. Yes, sir.

Q. A thousandth and one-half thick, .00156, before grinding? **(1706)** A. Yes.

Q. That would only have to do with production, wouldn't it? A. Yes, that is true, yes. Here is another one (indicating), by Wandersee.

Q. That is on card No. 5? A. Yes. Here is another one by Wandersee, on card No. 5. Here is two (indicating) on card No. 6 by C. Martin.

Q. Who was C. Martin? Do you know who C. Martin is? That is Charlie Martin, isn't it? A. Yes, Charlie Martin. This was—let's see—that was 1924.

Q. Chuck? A. I know where he was in 1927. He used to go between the engineering in Highland Park.

* * * * *

(1707) Q. (By Mr. Farley): In other words, how many, roughly how many **(1708)** are there in Mr. Shelldrick's department? A. That can sign these cards?

Q. No. But, how many are there in the department, all told, at the present time? A. I would say about 150.

Q. About 150? A. Yes.

The Master: And there are just about three that could sign the cards?

A. Yes, with the authority to put the change through.

The Master: Are there similar conditions as to the men in the shop that can put a change through?

A. The men in the shop can only request a change to the engineering department, and the authority for the change comes out of the engineering department.

Q. (By Mr. Farley): Well, the proportionate men in the shop, there are a few of them that have sufficient authority to authorize a change. How many men are there in the shop, as far as you know, that have the authority to put an engineering change through on production? A. A. Well, nobody in the shop can put an engineering change through. Anybody in the shop that is familiar with the job can request a change, and if the engineer sees fit to make that change to accommodate them, or to reduce costs, or to increase production, why, then, we do that.

The Master: Well, suppose for example you have an operator running one of these machines and he thinks it would be a good idea to change the design of the part to better suit the machine; could he go right to the department, and would **(1709)** his name appear?

A. No, no, his name would not appear. The engineer approving the change, his name would appear there.

The Master: Well, then, how do you get the name of anybody not in the engineering department on these cards?

A. Well, these cards—

Q. (Interposing): Well, take Martin's name, for example. Is P. E. Martin in a sufficient authority in the company to order that an engineering change be put through?

A. Oh, yes.

Q. Whether your department approves of it or not?

A. Oh, yes.

The Master: Well, is that true of some of the men in the machine design department, machining engineering?

A. No.

The Master: Pioch's department?

A. No.

The Master: Well, how does Charlie Martin's name get on the cards, then?

A. Charlie Martin's name gets on the card because he probably brought out a blue-print from down in the shop or some place else, and signed the blue-print, dated it, for record, and we consider then that the change was requested by Martin, Charlie Martin; see? We do that same thing today. Every shop foreman that sends in a marked blue-print for a change, and the change is approved, that record or print will go in our file, and his name will be on that print, although, usually today, the only authority that will appear will be somebody in the engineering department whose name will not appear unless it **(1710)** is on a communication attached to our record.

I will say this, that as a general rule, a majority of the changes originate in the engineering department, due to some changes in the design, but a good many of them do come from the shop; and just how they get into the system, into the records, finally, there may be a record of who requested it, or there may not be. The authority, oh, usually comes out of the engineering department today.

The Master: So, there may be a change, and the initiative of which will come from the shop, and, yet, so far as the cards are concerned, the name of the party identified with the change will be the name of someone in the engineering department, rather than the man in the shop who initiated the change?

A. That is true. You understand that this is not the record of the change. We have another set of records—I don't know about these model T records, but, at the present time we have another—our indelible record, the individual sheet that covers this change will sometimes show "Requested by so and so."

But, for instance, if our service department requested a change, we will say "Requested by service department," or "Requested by Briggs," or "Requested by Murray." This is a summary.

The Master: This is a summary of the changes made?

A. Yes, sir.

The Master: Or changes listed were made?

A. Yes, sir, this is just a summary. This is not the complete breakdown.

Q. (By Mr. Farley): Will you take again another survey of these **(1711)** cards and see whether or not any change was made in so far as the cams of the cam shaft are concerned? A. On both forging and finish?

Q. Yes, I wish you would, on both forging and finish.

The Master: Which cards are you taking up first?

A. I will take up the forging.

The Master: Yes.

A. Card No. 1, 2/12/09, relative positive between exhaust and inlet cam was formerly 109 degrees. This has been changed to 111 degrees to conform with Mr. Degener's sample shaft.

9/1/09 added 1/16th finish to front end of first cam, and put ⅛ clearance slot on machine drawing.

The Master: All right, go ahead.

A. 11/14/12, changed angle between inlet and exhaust cams from 111 degrees to 115 degrees and 45 minutes. Do you want to read the whole thing?

The Master: I don't think we are interested in the angle.

The Witness: What are you interested in? In the machining of the cams?

Q. (By Mr. Farley): Well, that particular part you are referring to refers to the fact that often the shop does not have sufficient stock to finish? A. Yes.

Q. That is all right. Well, the change in 1912, December 19, 1912, shows that a change was made in the drawing because the forging companies were making cam shafts in which to have their dies constructed in a certain way. That was a change to facilitate production, apparently, was it not? **(1712)** A. Yes, that is right.

Do you want all the changes on the cams?

Q. No, I don't think so.

The Master: This discussion can be off the record.

(Discussion off the record.)

A. In 1/18/1916, change diameter for face of cams from 7/8 of an inch to 57/64 of an inch. This change to take effect on all dies which are being made, and on all old dies when they are re-sunk.

On 1/16/1919, change diameter of cams at face from 57/64 of an inch to 59/64ths of an inch.

The Master: What does that mean?

A. That is the low limit, and this is the high limit; from a low 57/64ths to a high 59/64ths.

The Master: Why don't they give limits in the original figure here?

A. Well, they didn't have any there. They just added a limit there. Probably somebody made some under size, and, then, we added a limit, so we never get under the 57/64ths.

And, 3/11/24, added 3/16ths to front end of exhaust cam, No. 1, changing the length from 15/16ths of an inch, to 1-1/8th inches, and the distance between cam and flange from 1-55/64 to 1-43/64.

Q. That particular change, right there, Mr. Weyl, had to do, as I understand the note, with the distance of the spacing of the cam adjacent to the flange in the front end of the shaft, is that right? A. That is right. That is what it says.

Q. And that change tended to decrease the distance between the **(1713)** flange and the end of the cam, isn't that right? A. That is true.

The Master: And also lengthened the—

Mr. Farley (Interposing): And also lengthened the width of the cam.

The Witness: And also lengthened the width of the cam, that is right.

Mr. Farley: All right.

Q. (By Mr. Farley): And what was the date of that particular change, did you mention that?

The Master: That was mentioned.

A. That was on 3/11/24.

Q. I see. All right. A. That is all I can find with relation to the cams on the forging.

Q. Yes. A. On the finish drawing—

The Master: Start right there—this can be off the record.

(Discussion off the record.)

Mr. Farley: I think, Mr. Weyl, if you just run through now, until, let us say, the period around about —just take a look at 1914—any changes from 1914 on for a year or two—well, suppose you jump to 1924.

The Master: In fact, to get the record straight, why not start in at a period from 1907 to 1914?

Mr. Farley: All right.

The Witness: I have gone over all of them, I think, down—

The Master: You can keep this discussion off the record, **(1714)** Mr. Reporter.

(Discussion off the record.)

The Witness: There is one on June 11, 1912. It says, "re-design, bring the shape of cams up to date with the change made on T-533, also changing the angle between the exhaust and inlet cams from 111 degrees to 113 degrees, 25 minutes; this change to take place on 1913 cars. If, however, there are any cam shafts of our present design left over, they are to be used up before starting on the new forging drawings, will not be affected by this change."

And, 9/21/12, change diameter for base of cams from .8125 over .8130 to .812 over .813.

Q. I notice as you are going over that particular one, that on card No. 2, the change on March 7, 1916, which states that the change was made in order to avoid trouble that occurred when assembling the parts; that is correct? A. Yes.

Q. Of course, that was a production difficulty that that change was made to overcome? A. Yes, sir, that is right.

Mr. Farley: I will tell you what, if I might make the suggestion, if your Honor please, I haven't asked Mr. Weyl to study these cards particularly. He had no idea what I was going to ask him. I have a witness that is very eager to get away. I wonder if I could have Mr. Weyl study over these cards, and we might save some time, and he could come back on the stand, and you would know, then, and you wouldn't have to spend the time looking over the cards. Would that be all right? Any objection to that, Mr. Michael?

(1714½) Mr. Michael: No, not at all.

* * * * *

(1737) Pierce Weyl thereupon resumed the stand as a witness on behalf of the Defendant herein, and having been previously duly sworn, testified as follows:

Direct Examination by Mr. Farley (Continued).

Q. During the time you were off the stand, Mr. Weyl, have you consulted those cards to pick out quickly the places where the cards show a change in the shaft having to do with the cams? A. I will just give you the date, and if you are going to have photostatic copies, you can look at it. On the forging drawing on T-410—

The Master: Haven't you already gone through that?

Mr. Farley: I think you went through the forging drawings before. I think now you might go to the finish drawings. I think you discussed the forging drawings fairly well.

A. There are five changes on the cam in the forging drawing.

The Master: You also covered part of the finish.

The Witness: There are 11 changes on the finish drawing.

Q. (By Mr. Farley, continuing): That is relating to the cams? A. That is relating to the cams; either the ends or somewhere on the cams, the machining of the cams. That is on the model T. Do you want the model A?

Q. Yes. Will you consult the model A drawings? A. On model A—

(1738) Q. (Interposing): Just a minute on model A. What does your information show the date the model A, the first engineering information for cam shaft, for June 16? A. June 16, 1927—no, June 10, 1927.

Q. What does the June 10, 1927, date show? A. Release for production.

Q. That the part was released for production on that date? A. Yes, sir.

The Master: What card would show the dimensions when it was released for production, and other specifications?

A. The drawing of that same date would show what that was at that time. The record drawing.

Q. (By Mr. Farley, continuing): Just on that point, Mr. Weyl, I think if we refer to the blue-print that is in evidence, the blue-print A-6250, which is Exhibit 2, attached to the statement of account Exhibit "C," now this particular drawing contains in the box in the upper right-hand corner the date of 6/3/27; is that right? A. That is true.

Q. Now, how about your engineering information? A. It says it was released for production on 6/10/27.

Q. Is there a similar notation on the drawing? The first change— A. (Interrupting): The first engineering date on the drawing is 6/24/27.

Q. And, do you have a notation on the card? A. The card says on that date the contour of cam changed in accordance with change on finished shaft; flanged diameter reduced from 2-15/16 to 2-7/16 diameter.

(1739) Q. On the card, engineering information card A-6250-A-1 it shows on the date of June 24, 1927, release for production, and a change made in the drawing? A. That is right.

Q. Now, what does the drawing show? Does that also contain that date? A. It contains that date. That is the first release on the finish drawing.

Q. And, I notice in the box in the upper right-hand corner of the card it has the number 813. A. That has also 813; that is the release, E. I., engineering information number.

Q. And the engineering information card, No. 1, for the A-6250 shaft contains—the first item is item 813, that corresponds to the first change in the drawing? A. Yes.

Q. That, so far as the system works, so that the Court may understand it, at a time a change is made in the drawing, the exact information concerning the change which was jotted is down on the engineering information card, is that correct? A. That is correct.

Q. Now, suppose that your first change, reduce diameter of cam gear flange from 2-13/16 to 2-5/16; that would entail, would it not, making a change of the dimension, that particular dimension, as it appeared on the drawing as originally made? A. Yes, sir.

Q. Just how do you go about doing that as far as the original drawing is concerned? You have a tracing of it, and take the original tracing and erase the figure that was there before, **(1740)** and put in the new figure for the dimension? A. That is right. We keep a record blue-print of the way it was prior to the change on the tracing.

Q. And, in addition to that you have the other record? A. Have this record also, to tell what change was made.

Q. I see. So, taking any one of these sets of cards, and a blue-print such as Exhibit 2, you can take this blue-print too, and beginning with the last date that was given, you could trace back through all of these engineering information numbers, as contained in these cards, exactly what had happened, every change that had been made back to the date the drawing was first made? A. Yes.

Mr. Farley: Do you understand that system, your Honor?

The Master: Yes.

Q. (By Mr. Farley, continuing): Now, I call your attention, Mr. Weyl, to the second item on card No. 1 of the A-6250 shaft, which says, "Two intermediate bearings"—without bothering with the dimensions—well, "1.599 diam-

eter by 7/8 inch long added." Can you explain just what that would mean? A. It would mean it added a couple of intermediate bearings. There was one there and one over there. You can see it faintly on the print here (indicating). See that outline there. And this faint outline here, that didn't get quite rubbed out hard enough.

Q. And two bearings. A. Two additional cam shaft bearings were added at that time.

(1741) Q. And those bearings would be between what cams, as you number the cams? The cams are numbered on the drawing here. I see there is the faint line indicating that addition between the No. 3 inlet, and the No. 4 inlet, and a similar bearing was added between the No. 1 inlet and the No. 2 inlet? A. That is right.

Q. But, those bearings are not, however, shown on this blue-print, Exhibit 2, except the faint indication indicating they had been erased? A. Then they must have been removed at a later date.

Q. Now, if they had been removed at a later date, would you find anything on the engineering information cards? Will you look and see, please? A. (Examining cards): They were removed here 9/28/28; removed under E. I. No. 10419.

Q. That is the 8th change noted from the top on the blue-print? A. That is right.

Q. Under engineering information No. 10419, and the date of 9/28/28? A. It says, "Remove second and fourth bearings," so that is when those bearings were taken out.

Q. Now, I think I will—I don't think it is necessary to spend the time to go over all these other cards A-6250. Will you just state, after considering those, what changes, if there are any important changes in so far as the cams are concerned? A. It says here, "Change heel diameter of cam," on 9/28/28, when they removed the second and fourth bearings on that same change, they changed the heel diameter of the cam from .954 to **(1742)** .953/.955 and specified heel of cams to be concentric with bearings within two-thousandths.

Q. Of course, the change there was really no change in the actual dimension, but it gave the shop a one-thousandths variation below, and a one-thouandths variation above the .954? A. That is right.

Q. But, this changed, possibly, the accuracy within which the heel of the cam should be held relative to the bearings? A. That is right.

Q. Now, I notice, Mr. Weyl, that the blue-print on the model A job does not, as far as I have been able to determine by studying it, give any indication to the shop as to the amount of material to be left on the cams after the rough turning, and for assembly finish and finish grinding.

Mr. Michael: May I have the question?

(Question read by reporter.)

A. No, there is no allowance made there.

Q. Do you know what your practice is in that respect as far as the engineering department is concerned? Do you make it a practice to specify that amount to be left in the shop, or do you leave that to the judgment of the shop foreman? A. We leave that to the judgment of the production men.

Q. Now, were you in the engineering department during the design of the model A? A. Yes.

Q. Do you know Mr. Pioch? A. Yes, sir.

Q. Can you state whether or not during that period you saw Mr. **(1743)** Pioch around your department during the time model A was being designed? A. Almost every day.

Q. Can you state whether or not, to your knowledge, your department works with Pioch's department and whether, if at any time changes are made by your department in the design of any of the parts which go on the car, like the cam shaft, at the request of Pioch's department or to facilitate production? A. Yes, we make changes to facilitate production whether requested by Pioch or somebody else.

Q. That is not at all unusual? A. No. It is common practice.

Q. And, the engineering information shows that as far as the model A-6250 shaft was concerned, that changes actually were made in the bearings of those shafts? A. Yes, sir.

Q. We had testimony from Mr. Pioch that it would be feasible to make a change in the design of the bearings

of the model A shaft by cutting off some length, say, making the bearing a quarter of an inch shorter by increasing its diameter so as to keep the same area, surface of the area of the bearing. Would you state whether or not that would, in your opinion, be feasible?

Mr. Michael: Well, now, your Honor, I don't think this witness is qualified.

The Master: I don't think you have qualified this witness as yet. You will have to show he has more experience in the designing of automobiles.

(1744) Mr. Farley: That will be very easy.

Q. (By Mr. Farley): Do you, yourself, design parts for the automobile? A. Yes, I have. I am not doing that work right now, but I have all through, ever since I went with the company.

Q. Have you had some experience in engine design? A. Yes, sir.

Q. Well, let me put the question this way, whether or not you qualify as an engineer? A. Well, I am a graduate engineer of the University of Michigan, 1920. I have worked for Continental Motors and other manufacturers.

The Master: In the engineering department?

A. Yes, sir.

Q. (By Mr. Farley): Are you a graduate in engineering from the University of Michigan? A. Yes, sir.

The Master: Would you feel qualified to state as to whether a change in the bearings in the cam shaft would be feasible or not? Are you familiar with that part of the car and its function sufficiently to make a statement on that?

A. Yes, you could change the bearings.

Mr. Farley: First, are you qualified? Do you feel you have sufficient knowledge? Will you answer that question first?

A. Yes, I think I have sufficient knowledge to determine whether the bearings can be changed.

The Master: Now, you better ask the specific question.

Q. (By Mr. Farley, continuing): Now then, the specific question, **(1745)** with the knowledge that you have, would you state, as an experienced engineer, and graduate engineer, if a change such as we have described of taking a quarter of an inch, we will say, off one end of the bearing, and increasing its diameter at the same time to maintain the same bearing area, whether that would be feasible? A. It is possible. You would have to work out the mechanics to get your loading to know what you could do. If you increase the bearing pressure—you figure on projected area, and you can make it longer, and a small diameter, and have the same projected area, as if you make it shorter, and a larger diameter. It is the length times the diameter that gives you your bearing holding.

Q. My question was directed to that. Of course, assuming you had in the shaft, as it now exists, a desired projected bearing area? A. Yes.

Q. And, if you shortened the bearing by one-quarter of an inch, it would then be a matter of simple engineering mathematics to determine the exact size or increase? A. That is right.

Q. (Continuing): —in the diameter that should be resorted to? A. That is right.

Q. To compensate for the shortening? A. That is right.

Q. Now, would you state from your knowledge of the Ford Company's practice whether a change of that type would be at all out of the usual procedure, assuming that the change was made for production purposes, to facilitate production? **(1746)** A. No. We make a change like that if we thought there was enough involved, or a good reason for it. We wouldn't like to do it every day.

The Master: If you increase the diameter of the center bearing, would you increase proportionately the diameter of the end bearings?

A. Yes. We increase all bearings because that is very likely line reamed or burnished.

The Master: Would you also increase the diameter of the flange?

A. Not necessarily. That gear fastens on here. I don't know how the gear fastens on here. It wouldn't be

necessary to increase the size of this flange if this gear that fastens on here is keyed on from this end.

The Master: Would there be any reason for altering the size of the cams because of change in the diameter of the bearings?

A. No.

Q. (By Mr. Farley, continuing): The shafts you have before you, I will show you this shaft, Exhibit 33, the shafts you have before you are shafts not wholly completed? A. I see.

Q. Now, with respect to Exhibit 33, what means are provided on the flanged end for fastening the gear? A. This nut.

Q. That gear post end of the shaft is threaded, is it not? A. That is right.

Q. And having the threaded gear post end, that would involve no necessity to change the flange? **(1747)** A. That is right.

Q. One of the witnesses who testified concerning this proposition of the bearings suggested another alternative with respect to the—this is the rear bearing, is it not, the small bearing at the end opposite the flange? A. That is right.

Q. (Continuing): —suggested that parts might be made separately as a collar to slide over the end of the shaft. What would you say about that? A. That is not a good production job. I wouldn't say it was feasible. You could change this either in location or something else if you wanted to without any difficulty. That is on the back end of the block; you could move it backward or forward.

Q. How would that go as to a matter of Ford standards? You are pretty familiar with standards out there, aren't you?

The Master: How would what go?

Mr. Farley: I mean the proposition of making the bearing as a separate part.

A. I don't know of any place where we do it.

Q. The fact is in that respect the Ford Company, I think, is almost unique in insisting wherever possible parts be made integral rather than separate? A. That is the main principle of engineering we have; to reduce the number of parts.

The Master: You stated that you could lengthen the space between these bearings without any major alteration.

A. That is right. In this particular bearing here, there is **(1748)** nothing in the way, that I know of, on the car that would prevent you from moving that bearing back or forward here on the back end of the block. Up here you have your timing gear, which you have to take into consideration. This rear bearing, there is nothing in the way there that I know of.

The Master: Would you have to lengthen the rest of the motor design, or alter it, if you moved that back?

A. You would just have to put a boss on the back end of the block maybe 3/16 inch thick. It wouldn't be a very major change, I wouldn't say.

The Master: I suppose you are speaking now of the V-8 engine. Are you familiar with the A engine?

A. Yes, sir.

The Master: Whether the situation would be the same?

A. It would be the same on the model A. It would be the same on practically any engine. There is nothing in the way, as a general rule where this cam shaft lays on a "L" engine, which this is here. So I don't know what the removable sleeve idea is for. The main thing on this cam shaft diameter is this thing here. The diameter of the shaft between the bearings is what determines its rigidity more than the diameter at the bearing. It has a beam here that is supported in these two places. You have four loads on it; four valves.

Mr. Farley: I think that is all. I would like, of course, to introduce in evidence the—I think we might group these, if your Honor please; the model T-410 engineering information relating to the forging drawings, and consisting of five cards, all of the said cards having data typed on both **(1749)** the front and reversed faces.

The Master: Suppose you have an exhibit number marked on the front of each of these four sheets.

(Two groups of documents were thereupon marked Defendant's Exhibits 289 and 290, respectively, by the reporter.)

Mr. Farley: And, Exhibit 290 for the model T section drawing, engineering information, consisting of 7 cards.

Will you mark this, please?

(A group of documents were thereupon marked Defendant's Exhibit 291 by the reporter.)

Mr. Farley: As Exhibit 291, the engineering information cards for the forging drawings consisting of two cards. Will you mark these, please?

(A group of documents were marked Defendant's Exhibit 292 by the reporter.)

Mr. Farley: As Exhibit 292, the engineering cards for the finish drawings for the A-6250 cam shaft, consisting of 2 cards.

The Master: I notice on this Exhibit 290, card 6, a record of changes on the T-410 cam shaft under date of March 11, 1924. There is a notation entered: "Add 3/16 inch to front end of exhaust cam No. 1, changing the length from 7/8" to 1-1/16" and distance between cam and flange."

This gives rough turning specifications as well as grinding and inspection grinding specifications. Why do they have the rough turn specifications here, do you know? I thought you stated that the records here were solely on the **(1750)** finish size of the part.

A. Well, at this time on this drawing there must have been the rough turn grind, and inspection grind must have shown on the blue-print or on the tracing, and then this change was made. That is the only way I can explain it.

The Master: But, ordinarily, you didn't—

A. (Interposing): Ordinarily we don't show that rough turn grind and inspection grind dimension on a drawing. We give on the forging drawing—there will be a limit, high and low limit on the diameters, and then there will be on the finish drawing a finish diameter with a tolerance, and that is all. As this is in this card, it was on the drawing, I am pretty sure.

Q. (By Mr. Farley, continuing): I notice, referring to the model T drawing, which is Exhibit 1 attached to our Exhibit "C," that, as for some of the dimensions, they do give the grind and the finish grind.

The Master: Do they do that for the diameter of the cam?

Mr. Farley: I will let the witness answer.

A. On the cam it is usually shown on another—the cam outline is usually shown on a different drawing; cam contour.

Q. (By Mr. Farley): Well, they give one dimension here for the center bearing, and it gives that for the center bearing. I notice in the view here at the left of the sheet we do have rough diameter of cam? A. Yes.

Q. .860 to .870, and finish grind, .810 to .813. That would mean about fifty-thousandths left after the rough turning and finish grinding? **(1751)** A. That is right.

Q. Twenty-five thousandths on the side? A. That is right.

Mr. Farley: I think that is all. You may cross-examine.

Mr. Michael: Did you offer these cards, Mr. Farley?

Mr. Farley: I think I did. I had them marked, and, of course, I now offer them.

Mr. Michael: I would like a question or two on them.

The Master: Go ahead.

Cross Examination by Mr. Michael.

Q. As I understood your testimony, Mr. Weyl, these cards that have been offered here as Exhibits 290, 289, 291 and 292 relate only to the rough forging drawing and the finish drawing, is that correct? A. Yes, sir.

Q. And they show nothing regarding tolerances, dimensions or what not, for any of the operations intermediate the rough forging and the finish job? A. Oh, yes. They will show the intermediate operations if there has been a change between a forging and a completely finished job.

Q. I mean a change, now, that does not change the product; merely a change in tolerance in the job. A. That change shows on these cards; the change in tolerance shows.

Q. I understood you to say the cards didn't show anything of that kind; you left that to the shop? **(1752)** A. What I said there was the amount they leave for finish grinding. On the model there it doesn't show any tolerance for finish grinding, or anything like that, so that won't show on this card; but, if on the forging drawing we find that we haven't got enough stock, which shows in some of these cards here, we might increase the diameter of the forging at a certain place to allow enough stock to be finished off, and that change in dimension, increasing the amount of stock to be finished off, will be shown in this record.

But, if the shop wants to make three cuts to remove that from the forging down to the final finish, that is up to them. We don't tell them to take off twenty thousandths on the first cut and ten thousandths on the next, and then five thousandths grind or three thousandths, or so.

Q. If they want to reduce the amount of stock left on the cams on the turning operation from 60 thousandths to 40 thousandths, that would be up to them? A. That is pretty big, 60 to 40 thousandths; it might require a change in the forging itself.

Q. Supposing you had a different machine that came into the department for turning the shafts. That wouldn't show on these cards, would it? A. No, the machine wouldn't show.

Q. And, if after they got the machine operating they cut down the tolerance, that wouldn't show on the cards? A. What tolerance do you mean?

Q. The tolerance for turning the cams on any machine? A. No. Except in this case we show on the model T where we do allow a rough grind and inspection grind. I don't find that **(1753)** came on any of the later records.

Q. And, you said that was exceptional? A. That is right.

Q. And wasn't commonly done? A. That is right.

Mr. Michael: I don't know what the purpose of these cards is, Mr. Farley. I would like you to state what you expect to prove by them.

Mr. Farley: We expect to show by the cards, in view of the great deal of examination, that in so far

as any major changes were concerned, there were no major changes with respect to the contour of the cams during all the model T, or the model A production, and also we show the fact that these cards fully corroborate the testimony of Mr. Pioch, and also the testimony just now given by Mr. Weyl, that it is not only nothing unusual, but rather common practice of the Ford Company to make changes in the design of a part to facilitate production from time to time; also, that in this very instance of the model A shaft, changes were made even after they got in production in bearings for bearing size, and that sort of thing.

The Master: The question which came up in response to which, I think—or in answer to which I think you were going to prove these cards was in connection with the question of whether the straightening operation might not have been added because of reducing the tolerance in the rough-turning operation because of more rigid specifications as time went on. These cards would not conclusively answer that—

Mr. Farley (Interposing): I think they would, if your **(1754)** Honor please, on the model T job, because, as you note, the drawings on the model T, this one drawing does give tolerances and amount between rough grind and finish grind on the shaft, as well as on the cams. Now, if any change had been made during the time when the shift-over occurred from the shaper to the Melling cam lathes, it should be on the card.

The Master: In the first place, the drawing that you have does not show the tolerances for rough turning the cams themselves, but only the margin in between the cams.

Mr. Farley: No. If your Honor please, I will have the witness testify.

RE-DIRECT EXAMINATION by Mr. Farley.

Q. On the view at the right of the sheet, on the left-hand side of the sheet, I call your attention to rough diameter of cam; .860 to .870; finish grind .810 to .813. Will you state just what part of the cam shaft that dimension is given for? A. That base circle diameter of the cam.

Mr. Farley: Of the cam?

A. Of the cam.

Mr. Farley: That is for each and all the cams?

A. The bottom part of the cam.

The Master: Do you know whether this rough diameter given is the rough forging diameter or the rough turning diameter?

A. That is the turning diameter, if it is within 10 thousandths.

Mr. Farley: Yes, that gives the diameter of the cam, and if you allow that material, that amount of material for the **(1755)** turning operation, and between the turning and the finish grind on the base circle of the cam, can you state whether or not that same tolerance would prevail as to the rest of the cam contour?

A. Very likely it would be about the same.

The Master: Of course, if this were—this has been stated to be an unusual case where the rough turning diameter is given in the drawing, and also indicated in certain of the changes, and if the foreman were given to understand that by and large the only thing that they had to be concerned with, as far as measuring up to the requirements of the engineering department was concerned, was the finish size, the foreman might well make a change in the tolerance, which they required for the rough turning, without notifying the engineering department.

A. That is possible, but it isn't very likely. If they want to change any dimension on these prints, they should notify us to put through a change in whatever dimension they want to change. Otherwise, our drawings would be of no value. We would think they are making it one way, and they are making it some other way.

The Master: Does the foreman have these drawings in front of him?

A. Yes. Anybody in the plant has a blue-print.

The Master: If the foreman made a change in the tolerance and rough turning of bearing, say either the center bearing, or one of the end bearings, he would not notify your department, would he?

A. He would examine the appearance on the drawing, because we have **(1756)** to change that dimension to conform to whatever he wants.

The Master: Does that appear on the drawing?

A. Rough turn and grind. If it doesn't appear on the drawing, he wouldn't have to do that. If it does appear on the drawing, he should notify us. All he has to do is send us a marked print, and mark on there he wants that limit changed; and then, as a general rule, somebody tries to find out why he wants it changed, and we change it.

Q. (By Mr. Farley, continuing): You went to the Ford Company in 1927 at the beginning of the model A production? A. Yes, sir, and before model A started.

Q. But, you were not there during all of the model T production? A. Just the latter part.

Q. Your testimony that it would be unusual is based on your experience in model A and V-8 production, isn't it? A. That is right.

The Master: Is it also based on an inspection of cards similar to this or to these cards produced for various model T parts?

A. Our system of handling a change on a drawing has never been changed. If anyone wants a change on the drawing, they are supposed to send a marked print to the engineering department, or a communication, asking the engineering department to make the change. The drawing is then changed, and a record and E. I. made covering that change, and usually it will say why the change was made, or revision.

The Master: But, as to whether tolerances, other than the tolerances for the finished part, are ordinarily given **(1757)** in the drawing, and whether such tolerances would—or, ordinarily included in your records showing the tolerances which are made, or showing changes in tolerance which are made on the finished drawing, as to whether that was at all common during model T production, you would have some information on that from an inspection of these cards and various parts in the past, would you not?

A. Yes. As I say, whatever is on the drawing, no matter what dimension is on that drawing, if anybody wants to change it a request has to go through the en-

gineering department to get it changed. If on this drawing it shows rough, and you might have a semi-finished rough, or rough, or a semi-finish, and finish and a grind, and if somebody wants to change those tolerances, or limits on there, the only way they can get it changed is to come to the engineering department because we have the tracing that this blue-print was made from, and if they want to make a change, they have to change the drawing. That is their authorization. They can't make a change without telling anybody; otherwise, they would be changing something we don't know about, which sometimes happens on a die, which when we are going into production, and they make a change on account of tearing metal, we might not get the change until three months afterwards; but, that is very rare.

Ordinarily, on machine surveys like this, they have to give us a marked print or a written communication asking us to change that drawing. If they don't give us it on the exact date, they will give it to us later and it will appear on **(1758)** our records.

The Master: Suppose a foreman decides that he wants a straightening operation previous to rough-turning the cams, which would enable him, on the rough-turning operation, to bring the tolerance limits from, say, .862 to .868.

A. Yes.

The Master: Instead of .860 to .870, which are the dimensions given in this drawing. If the department produced a finished cam shaft which had the limits between .810 and .813, nobody would particularly care whether the tolerances in the rough turning were changed or not, would they?

A. Well, you say nobody would care, but still the law is they should notify us that they want that changed. We have to hold that, because otherwise they would make all kinds of changes and we wouldn't know anything about them.

The Master: They would be more likely to notify you of such a change than a finish change?

A. Yes. They could go ahead and vary just a little bit, and we wouldn't find it out right away, but if they change something else on here that the inspector would

catch, you would find that right away. Nobody is supposed to change any dimension on any drawing unless it goes through the engineering department for any limits.

Q. (By Mr. Farley, continuing): As far as a change of that type is concerned, I don't know whether you are familiar with the operation in that particular department—do you know whether you would, or have in that department—let me make it, do you know whether they did have in that department, or do have in that department, any inspection of **(1759)** the shaft between the rough turn and the various grinding operations? A. I don't know.

Q. You don't know? A. I don't know.

Q. Did you ever see them working in that department? A. Yes.

Q. Have you ever seen the snap gauges they use, particularly which they use after rough grind, or the rough finish, rather? A. Well, I have seen them make them, but I never paid any particular attention to it.

Q. At the present time, have you ever seen these snap gauges they use, for example, after the first grind? A. No. I never saw the actual gauge, I don't believe. I know this, if you leave too much metal on your rough grind, the fellow that has to do the final grinding is going to kick. If you take metal off so that they wouldn't have so much to grind off, we don't care.

Q. Suppose you take so much off and it doesn't clean up? A. Then, he will holler.

Q. As a matter of fact, in the department— A. You will find that has been done in these records here where we have added metal to the forging so that they can clean up.

Q. As a matter of fact, you use throughout the whole plant what we call upper and lower limit snap gauges? A. That is right; high and low.

Q. High and low, and they use those in the department for gauging the shaft after the rough-turning operation? A. I couldn't say that; I don't know.

(1760) Q. Suppose, if you assume they did use that, wouldn't it be necessary for the foreman, if he made a change, to have the— A. (Interrupting): He would have to change his gauges, too.

Q. Have the change made in the gauges? A. That is right.

Q. So that it come through? A. That would come through tool design; we wouldn't have anything to do with that.

Mr. Farley: That is all.

Re-Cross Examination by Mr. Michael.

Q. Mr. Weyl, if the Department 410 put in a bunch of new machines for turning the surfaces off these cams, and that automatically resulted in less tolerance or cutting closer to size, would that be reflected in these cards? A. The only way that would be reflected was if there had been some dimensional changes made.

Q. You have a dimension change here. Now, you put in a bank of new equipment, and change that dimension, is that reflected in these cards? A. If the dimension is changed, it should show in the cards.

Q. What is the date of this change we have been talking about here on card No. 6 of Exhibit 290? A. 3/11/24.

Q. March 11, 1924, is that right? A. That is right.

Q. What is the indication regarding the rough turn? A. Reduce the dimension from 1.958/1.962 inches to 1.771/1.775 **(1761)** inches.

Mr. Farley: Is there any change there in the tolerance; it is still four-thousandths tolerance?

A. The tolerance still remains four-thousandths.

Mr. Farley: But, the overall dimension is reduced approximately 2 hundredths of an inch?

A. That is right.

Mr. Farley: Just what part of the cam was that change made on?

A. The distance between the cam and a flange.

Q. (By Mr. Michael, continuing): It doesn't agree with the drawing? A. It doesn't agree with the drawing, no; there must have been another change after that sometime.

Q. Another change after the change noted on card No. 6? A. That is right. This one "A" (indicating).

Q. And, what does that have reference to? A. The distance between the flange and the cam.

Q. Well, is there any designation on this drawing, this Exhibit 1 attached to defendant's statement of account,

is there any designation in here as to the rough size of the cam?

Mr. Farley: What do you mean the rough forging size?

Mr. Michael: No.

A. Just on this basis here, there is rough diameter of cam .860 to .870.

Q. (By Mr. Michael, continuing): That is the rough turning size? A. It must be.

Q. Why do you say "it must be"? **(1762)** A. Rough diameter of cam .860/.870; finish grind, .810 to .813.

The Master: The reason you state that is because you think a forging can not be made, or, at least, those aren't practical—

A. (Interrupting): Limits on a forging.

Q. (Continuing): And this card No. 6 doesn't indicate any change in those matters? A. No, sir.

Q. And, one of the items it does indicate a change? A. This distance here.

Q. It differs from the notation on the drawing? A. Yes. Of course, there might have been a change after this, where that was changed again. You can't tell unless you go through the whole set of cards to find out that.

The Master: I will admit these exhibits in evidence. I think there is some evidence of the point, even if there were no reference at all to the rough-turning tolerances, because if the finish tolerances remain the same throughout the period, it certainly throws some light upon whether the rough-turning tolerances were materially changed.

Mr. Michael: It may throw some light on it, but the tolerances we are dealing with here, concerning with intermediate operations that may well enhance production; for instance, your finish grinder can turn out much better and quicker work if your tolerances are kept closer during the turning of the cam.

The Master: I think that is clear from the evidence.

Mr. Michael: That is all I have.

Mr. Farley: That is all. Thank you, Mr. Weyl.

(Witness excused.)

* * * * *

(1845) PIERCE WEYL was thereupon recalled as a witness on behalf of the Defendant herein, and having been previously duly sworn, testified further as follows:

RE-DIRECT EXAMINATION by Mr. Farley.

Q. You testified yesterday afternoon, Mr. Weyl, with reference to the model A shaft, and you called attention to Exhibit 2, the blue-print of the model A shaft, forming a part of Defendant's Exhibit A, to the places where the intermediate **(1846)** bearings referred to in the engineering information, Exhibit 292, had been on the shaft and had been removed. Now, also, in view of your testimony concerning the shortening of the bearings of about a quarter of an inch, you have now produced a blue-print in which you have drawn, in crayon, the intermediate bearings as shown, or as referred to in the engineering information card, and you have indicated on this drawing the shortening of the bearings, is that correct? A. Yes, sir.

Mr. Farley: I would like to offer that blue-print in evidence as Defendant's Exhibit 297 as illustrative of the witness' testimony yesterday afternoon.

(The document above-referred to was thereupon marked Defendant's Exhibit 297 by the reporter.)

Mr. Michael: Mr. Weyl, did you say yesterday that the model A shaft had actually been changed in this way at some time in production?

A. Yes, sir. These two bearings had been removed, and if it had been desirable to cut any length off of these other bearings, we could have put these two bearings back in and then removed an equal amount from the bearings that remained, rather than change diameters, this would really be a more feasible way to do it.

Mr. Michael: Then, this does not show anything you actually did?

A. No. It just shows a method that could have been used to perform the same thing as I was questioned of yesterday, how to shorten the bearings; the method of shortening the **(1847)** bearings.

Mr. Michael: Then, it is your testimony now that had you at some time or other decided to shorten the end bearings and the center bearing, you would have

added these two other bearings that you show here intermediate the center bearings and the end bearing?

A. I think that would have been the more feasible way to do it; yes.

The Master: You would have had to do some collar cutting around two bearings, wouldn't you?

A. Yes. That, of course, was in the block before we removed that bearing. I mean that was all in the block prior to the removal of these two bearings.

The Master: When were those two bearings removed?

Mr. Farley: What does the information card show as to the period of time and length of time in actual production the Ford Company used those intermediate bearings?

A. Two intermediate bearings were added 7/6/27, removed 2nd and 4th bearings 9/28/28.

Mr. Farley: You are referring to Exhibit 292 now?

A. Yes, sir.

The Master: Were there any changes made in the rest of the motor as of that date?

A. There must have been. When these bearings were removed very likely the collar for the bushing support and everything was taken off at the same time; that would show in the block record.

The Master: Do you know why those were removed?

(1848) A. No, sir, I do not. That probably proved to be unnecessary.

The Master: Would it make less parts to manufacture to remove the two?

A. It depends on whether we ran the bearing in cast-iron or not. I don't know. If we ran it in cast-iron it wouldn't make any difference, if we used bushings we would have two bushings.

Mr. Michael: Would you run a bearing like that in cast-iron?

A. Some.

Mr. Michael: You mean a cast boss on the inside of the motor block?

A. No, right in the block.

Q. You just mount the shaft on these two bearings right in the cast-iron of the motor? A. Some manufacturers do. I don't know whether model A was made that way or not.

Mr. Michael: If you did that, would the cards indicate?

A. No.

Mr. Michael: Do the cards indicate the addition of parts when this change was made?

A. I could trace the record and find out.

Mr. Michael: Do you know whether they ran these two extra bearings right in the cast-iron?

A. No, sir, I don't know.

Mr. Michael: Would you think they did?

A. I would think not.

Mr. Michael: And, if they didn't, what would have been **(1849)** required by the addition of those two bearings?

A. Two additional bushings.

Mr. Michael: And, the bushings would have been, there would have been the extra operation of mounting the bushings in the cast-iron openings in the motor block?

A. Yes, sir.

Mr. Michael: When they took the two bearings off, they would have saved—strike that out—were these added bearings just connected integrally with the shaft?

A. Yes, sir.

Mr. Michael: And then they, of course, had to be machined, and so on, and polished?

A. That would all be done when you machined the other bearings.

Mr. Michael: But, you would have had those added operations of machining and polishing those added bearings?

A. Just the tool maintenance on that, I would say.

Mr. Farley: Just merely added extra tools?

The Witness: That is all.

Mr. Michael: You would have to have a fixture in which were added two tools and two grinding wheels to take care of that?

A. That is true.

Mr. Michael: When you added these two bearings, did you shorten up the center bearings and the end bearing?

A. The record doesn't say so.

Mr. Michael: Do you know?

A. This is the record.

Mr. Michael: From the record—

A. (Interrupting): There were no changes made on the other (1850) bearings when those two were added according to the record here.

Mr. Michael: Then, you made no change in the center bearing or end bearing when you added these two bearings?

A. No, sir.

Mr. Michael: That is all.

Mr. Farley: As far as the use of any bushing, in case bushings were used they would have been employed in the shop in the period from July 6, 1927, to September 28, 1928?

A. Yes, sir.

Mr. Farley: That is all.

Mr. Michael: I object to the offer of the drawing as not showing anything that was done by the Ford Company or was apparently available to them.

The Master: Well, I will admit the exhibit in evidence as part of the defendant's proofs in connection with the possible modification of the shaper or of the bearings to enable the shaper to be used.

Q. (By Mr. Farley, continuing): There are four photostatic copies for the engineering information for the finish size for the period beginning June 16, 1918, and extending to November 10, 1928. There are two photostats for the forging engineering information ranging from the period of the third of July, 1918, to the 19th of January, 1926; is that correct? A. That is right.

Q. Now, the finish drawings, I note run to the latter part of **(1851)** 1928, and the last engineering information is added A. R. to symbol number indicating use for repairs on 1917-1928, Fordson. How is it, Mr. Weyl, that the forging engineering information seems to stop on the 19th of January, 1926, do you know? A. I can't explain that. Evidently when the part went for service we added A. R. to the finish drawing. The forging drawing was not—didn't have the suffix added to the number. It is an error on the part of somebody in the engineering department.

Q. You weren't able—there is no other card? A. No other card that I could find.

Mr. Farley: All right. I offer these in evidence as Defendant's Exhibit 298.

(A group of cards were thereupon marked Defendant's Exhibit 298 by the reporter.)

Mr. Spohn: All under the one exhibit?

Mr. Farley: All under the one exhibit; 6 cards.

The Master: They are admitted. There is no objection other than the one you made to the other cards?

Mr. Spohn: No further objection than that, but we may want to ask the witness a question or two.

Re-Cross Examination by Mr. Michael.

Q. Mr. Weyl, would you say from those last cards that Mr. Farley offered, Exhibit 298, that the tractor production started in 1918, or would there be cards prior to that? **(1852)** A. There is no card prior to that. But, I am quite sure we made some tractors prior to that date. How many, I don't know. We made some in 1917, as I recall.

Q. According to your recollection, is that when they started the tractor production, 1917? A. 1917 is when they

started to build them. Whether they were in production or just experimental models, I just couldn't say.

Mr. Michael: That is all.

(Witness excused.)

* * * * *

(1715) JAMES McEVOY was thereupon called as a witness on behalf of the Defendant herein, and having been first duly sworn, testified as follows:

DIRECT EXAMINATION by Mr. Farley.

Q. Where do you live, Mr. McEvoy? A. 1771 Burns Avenue, Detroit.

Q. And, what is your occupation? A. I am a director in the Patent Section of General Motors Corporation.

Q. Did you receive a subpoena to appear here? A. I did. Here it is (producing document), half-past twelve today.

Q. And, have you any interest in this proceeding here? A. None whatever.

Q. How long have you been in charge of the Patent Section of General Motors? A. Since 1922, July 1st.

Q. In connection with your duties in the Patent Section of General Motors did you have any, or gain any, particular knowledge of a certain litigation brought against the General Motors by the Gordon Form Lathe Company? A. Yes, I did.

* * * * *

(1717) Q. Now, there was introduced here in evidence, Mr. McEvoy, as Defendant's Exhibit 71, an agreement between—"Made this 30th day of October, 1930, by and between the Gordon Form Lathe Company, a corporation of Ohio, and General Motors Corporation, a corporation of Delaware."

Did you have anything to do with the making of that agreement (handing volume of prior transcript to the witness)? A. Oh, yes, I remember that agreement very well.

Q. I assume prior to the making of that agreement you had many conferences with representatives of the plaintiffs? A. No, not many conferences; no.

Q. You had some, however? A. I, perhaps, had two or three.

(1718) Q. What was, if you recall, Mr. McEvoy, what was the first demand made by the plaintiffs on General Motors in connection with that litigation? A. The first interview I had with Mr. Richey, and I think Mr. Gordon, and I think two gentlemen from Milwaukee, two attorneys, as I recall, they said they thought the Gordon Company was entitled to $1,250,000 from the industry outside of Ford.

Q. I notice this particular agreement sets forth a consideration of $195,000. A. That is correct.

Q. And, was that the sum that General Motors paid to the plaintiffs here? A. That was the sum paid by all of the persons in interest.

Q. That sum covered—do I understand that sum covered the entire automotive industry with the exception of the Ford Motor Company? A. That is correct; yes, sir.

Q. And, I notice this particular agreement says that, in paragraph 1, after reciting the consideration, that the Gordon Form Lathe Company hereby releases and agrees to release General Motors Corporation, a corporation of Delaware, its subsidiaries and nominees, with the specific and sole exception of the Ford Motor Company. Did you have anything to do with the insertion of that exclusion of the Ford Motor Company? A. No.

Q. Who was responsible for the placing of that in this particular agreement, if you know? A. The Gordon Company. I don't know which individual connected with **(1719)** it would be responsible. But, at all times they said that the Ford Company was not to be included in the settlement, and we really were taking the matter up for the National Automobile Chamber of Commerce, of which Mr. Ford was not a member. So, there really was no reason why he should have been in this at that time.

Q. Do you know whether or not any knowledge or information was given to the Ford Company of the fact that a settlement was to be made? A. Not by me.

Q. Nor by anyone else, as far as you know? A. No, sir.

Q. Do you know whether or not any invitation was given to the Ford Motor Company to participate in that settlement? A. No, sir, we were not interested in the Ford Company at all.

Q. Now, in connection with the fact, and noting particularly that the settlement was finally effected by General Motors Corporation for a very much smaller sum than one million and a half or one million and one-quarter dollars, whatever you say, did you, at any time, in any interviews you had with anyone representing the plaintiffs refer to any of the defense material that Mr. Laughlin had uncovered? A. Yes, I think I did.

Q. Did the matter of the payment of so much per cam, or so much per cam shaft enter into the settlement which you made? A. No, only indirectly.

Q. In so far as your negotiations with the plaintiffs was concerned, that matter was never considered? A. Amount per cam?

(1720) Q. Yes. A. No.

The Master: When you say "indirectly," what do you mean by that?

A. Why, when we settled we acted for all of the concerns in interest. There were 14 of them; 7 automobile companies and 7 other companies who were using this patent, such as the Continental Engine Company, and so on. And, we undertook to make this settlement and pay the money, and then collect from each of the persons in interest their proportionate share based on the number of cams they made.

Q. (By Mr. Farley, continuing): Number of cams, or number of— A. (Interrupting): Number of cams.

Q. That, in reality, was an allocation based on production of the companies? A. Yes, sir.

The Master: Did you, in advance of the settlement, submit to the plaintiff any figures, or the plaintiff's counsel, any figures as to the number of cams that had been turned on the infringing machines?

A. No, sir, I never did.

Q. (By Mr. Farley, continuing): I note that this particular agreement refers to, in paragraph 8, "General Motors Corporation on its part agrees to indemnify and hold harmless the Gordon Form Lathe Company against any and all claims and/or demands arising out of or by virtue of contracts, copies attached hereto and made a part hereof, made by it with certain other parties, namely," the

J. I. Case Company. There are two agreements noted with the J. I. Case Company; two agreements with the (1721) White Motor Company; with the Nash Company, and one with the Chrysler Corporation. A. That is correct.

Q. Now, referring to the reference to the White Company there, do you know anything about the inclusion, or the reason for the inclusion of all of these companies here, including the White Company in that paragraph? A. Well, the Gordon Company had made agreements with these concerns prior to the settlement that we effected, and they simply put this clause in. It didn't really make any difference. I don't know exactly why they put it in, as a matter of fact. It was all concluded.

Q. They had some sort of a contractual agreement with those particular companies, as appears from the very face of this paragraph? A. Yes. They had settled with them.

Q. And they had made certain contracts with those companies? A. That is right. I couldn't tell you right now, Mr. Farley, what those contracts were.

Q. I appreciate that. A. I mean the form of them.

Q. Do you know whether you have, Mr. McEvoy, in your files copies of those contracts referred to, which it says: "Copies are attached hereto and made a part hereof"? A. Well, I ought to have them, or the attorney for the N. A. C. C.

Mr. Farley: In connection with that point, your Honor please, you recall the demand I made on the plaintiffs to produce the White agreements, and I would like to have the demand to produce extend to the agreements with the Case (1722) Company, because I found on further study of the record that plaintiffs also put in an agreement, or a release, with the Case Company. I think that is—

Mr. Michael: That is correct, and we would be glad to furnish all these contracts. They were given to the defendant in the trial below, and they returned them. They didn't want to use them, and there has been no demand on us since, until this session here in Detroit.

Mr. Farley: There would have been a long time ago if I had looked at those contracts below instead of Mr. Cooper.

Mr. Michael: Well, they were always available to you. They were offered.

The Master: Do you have those contracts with you here in Detroit?

Mr. Michael: Yes, we have them here in the hotel room.

Q. (By Mr. Farley, continuing): Now, do you know whether or not, Mr. McEvoy, the General Motors Corporation, as I understand it by this contract, they practically took title to the Gordon patent? A. I just noticed this clause (indicating), took an exclusive license as I remember, with the right in the Gordon Company only to prosecute a claim against the Ford Motor Company. That is the only interest in the patent that they reserved, I think.

Q. That is right. The contract provided that all title to the patent, except the reservation of the right to sue the Ford Company, went to the General Motors Corporation, including the right to the General Motors to sub-license to the companies? A. That is correct.

Q. Do you know whether under that contract General Motors granted **(1723)** any licenses to other companies? A. I think we did. I think we granted licenses to all the companies that paid, that contributed.

Q. And included in those companies were the licenses to the White Company, do you know? A. I don't think so, because that had already been granted. I don't really recall, but I don't see why we should have. I would have to look that up, Mr. Farley.

Q. Do you know whether or not General Motors Corporation made any payment to the White Company? Have you got any records or data which show that? A. I think we did, yes.

Q. You made some sort of a refund to the White Company— A. (Interposing): Made a refund to a number of them. I have the statement here—

Q. This matter—go ahead. A. I haven't anything to say.

Q. What is this (indicating documents)? A. According to this the Case Company paid Gordon $4,000. This is just my memorandum. I haven't checked this off to see if it is correct; and, also paid $1,056 for past infringement, $5,056; and, under this settlement we returned to the Case Company $5,000.64.

Q. Mr. McEvoy, did you attend to the details yourself of the adjustment of contributions? A. No, I did not.

Q. But, you knew generally? A. Yes, Mr. Arvedson, the patent attorney of the N. A. C. C. did that; George Arvedson.

(1724) Q. We have in evidence here a departmental communication with the White Motor Company that refers to a release and a sub-license received, apparently, by them December 31, 1931, and it contains a memorandum to the effect that a check for $3705.92 was received December 31, 1931, from General Motors Corporation representing the difference between payment of $6455.92 which they paid to the Gordon Form Lathe Company. A. Is that the White Company?

Q. Yes. A. Well, all of the financial transactions are handled by the General Motors Corporation. But, we acted upon the advice of Mr. Arvedson in the settlement.

Q. Would that be in accordance with your recollection that, as a matter of fact, General Motors Corporation did send a check to the White Company for a sum in the neighborhood of $3700? A. That doesn't show in my memorandum. But, this memorandum perhaps wasn't exactly accurate. The one I have here shows the White Company entitled to $525.04. This may not be accurate. This was probably made when we were first figuring on it.

Q. Well, could you state whether or not General Motors did send a check to the White Company? A. Well, I think so. I am quite sure they did. But, I hesitate to testify to something that I didn't handle myself.

Q. As to the exact amount, you have no particular knowledge as to the amount? A. Yes. I could get that for you.

The Master: How was the settlement figure of $195,000 **(1725)** arrived at?

A. Mr. Laughlin, on his investigation, got in touch with a Mr. O. W. Redlin, who according to the record of the Patent Office was a joint inventor with Mr. Gordon of this patent. This patent was issued to Gordon and Redlin.

Mr. Redlin, apparently, had little if any interest in the suit, but he became very much interested. He was the Works Manager Superintendent for the A. O. Smith Company of Milwaukee, and as I recall, had befriended Mr.

Gordon in a great many ways, and he was rather agitated about this suit. I don't think he liked it very much.

So, he undertook to see what he could do to settle it, and he came over to see me with Mr. Laughlin. He suggested $200,000, an arbitrary figure. I told him I wouldn't pay $200,000.

Then, he went back and called me up one day and said he could settle for $195,000, and I agreed to that, and then he sent me an agreement in which he purported to represent the entire Gordon interest which, undoubtedly, he did. That was agreed to about July 30, 1930, and I told him this isn't a settlement just for General Motors; it was a settlement for these 14 companies interested in the matter, and I would have to take it up with them to see if they were, to see if they would join in, and we wrote out exactly as we could the number of cams each one of them made, and the settlement was based on that. And, some of these companies like White and Case under that theory paid too much. That was why they received a refund.

The Master: Did you have any information prior to July, **(1726)** when you had this agreement with Redlin, from the other companies as to the number of cams they had turned on the infringing machines?

A. I don't think so. I don't really remember. I don't think so. Mr. Arvedson might have gotten some of the information from some of the automobile companies, but that I couldn't tell you, sir. I simply felt that it might be well to pay a little less than $200,000 to settle the thing and not have further litigation.

Q. (By Mr. Farley, continuing): Was that decision to settle for $195,000, did you, in connection with that, Mr. McEvoy, take into account the decision of the Sixth Circuit Court of Appeals in a case decided shortly before this settlement was made by the General Motors Corporation in the Gear Grinding versus Reo case wherein the Sixth Circuit Court of Appeals held that due to the fact that the Chamber of Commerce had taken over the defense of an earlier case filed against Studebaker, that that decision was res adjudicata as to all the members of the Chamber of Commerce? A. Well, I had that decision in mind, but I have never really recognized it. That was more or less of an obiter dictum of Judge Denison, but I did have that in mind; yes.

Q. With due deference that we always have to the Court of Appeals' decisions, you realized that there was a decision, but without wishing to attack the Court, you like to reserve your judgment as to the correctness of their law in that particular matter? A. Yes. I think they were mistaken. We all feel that way at times.

(1727) Q. That being said, of course, without in any way prejudicing you? A. Oh, yes. I say that in all due respect.

Q. Do you know whether or not the Automobile Chamber of Commerce, as it then was, had taken over the defense of the litigation against the Walcott Company? A. Yes, they had.

Q. That is the case of Gordon versus Walcott? A. Yes.

Q. The defense of that case was taken over by the Chamber of Commerce? A. Yes, sir.

* * * * *

(1729) Cross Examination by Mr. Michael.

Q. Mr. McEvoy, my name is Michael, and I am from Milwaukee. You remember me attending one of those meetings, do you not? A. I think I remember you, the first one, I think.

Q. In the summer of 1929? A. Was it 1929?

Q. That was when the meeting was, I think. A. I thought it was after the suit had been brought; 1930.

Q. Well, frankly, I don't have the record of it as to the date of the meeting. A. It would not make any difference. I remember you.

Q. I am sure it was before the depression came along, the crash of 1929, and we had that first meeting. Do you remember having a meeting with representatives of the various automobile companies in 1929? July, 1929? A. I don't think I did.

Q. Would your file show a record of such a meeting? A. It might.

Q. Would you look to see? A. In 1929?

Q. Yes. In July, 1929. A. This stuff I have here doesn't go back of May, 1930. Mr. Arvedson may have had such a meeting. I don't believe I did. I might have.

Q. You don't remember any such meeting? A. No, I don't.

Q. It was held in the General Motors Building. A. I wouldn't dispute that, sir; I just don't recall it.

(1730) Q. You don't remember being at any such meeting? A. No.

Q. You never attended a meeting with representatives of various automobile companies concerning this patent? A. I wouldn't say that either; I just don't recall it.

Q. Did you ever remember attending a meeting of representatives at which there was present a representative of the Ford Company, Mr. Halbert? A. No. What was his name?

Q. Halbert. A. We were not interested in this thing in 1929. We left the matter entirely in the hands of the N. A. C. C. I hadn't even started to do any work on it.

Q. Well, did you attend a meeting in Detroit called by the N. A. C. C.? A. I may have done so. I don't remember it, and I don't believe I did.

Q. And, you don't remember attending a meeting in behalf of General Motors at which there was present a representative of the Ford Company? A. No, sir.

Q. And you don't remember, yourself or any one in your department inviting the Ford Company to attend any meetings of that kind? A. That we would invite the Ford Company?

Q. Yes. A. No, I am sure we didn't.

Q. Well, did you yourself call any meetings? A. No, sir.

Q. Then, of course, you wouldn't have invited the Ford Company? **(1731)** A. I am sure of that.

Q. You don't know whether the N. A. C. C. invited them or not? A. I don't remember, but I don't believe that they did.

Q. And, it was the N. A. C. C. that called these meetings? A. If there was such a meeting, but I don't remember it. About what date was that in 1929, do you think?

Q. Well, there was one meeting at which, according to the evidence in this case, Ford's own records, Mr. Halbert of the Ford Company attended, that was July 9, 1929? A. July 9, 1929?

Q. And, he was instructed when he went there that he shouldn't commit the Ford Company in any way; he was

just going as a listener? A. Well, if there was such a meeting it must have been held at the request of Mr. Arvedson.

Q. But, you don't remember Mr. Halbert being there? A. No, I don't.

Q. Do you know Mr. Halbert? A. No, sir, and I don't believe I was at any such meeting.

Q. Do you remember telling me and the other gentlemen who attended the meeting with you in your office the first time that you were representing the entire industry except Ford, and that Ford refused to come in on it? A. I might have told you that I represented the industry outside of Ford, but I never asked Ford to come in.

Q. And, you don't remember saying that Ford had been invited and refused to come in? A. No.

Q. And that Ford would never settle anything like this anyway? **(1732)** A. Well, I might have told you that last, but I have no recollection of telling you he wouldn't come in. I certainly had no contact with them.

Mr. Farley: Having in mind particularly anything like this.

Q. (By Mr. Michael, continuing): Mr. McEvoy, the agreement that the Gordon Company signed with your company, the settlement of the company, specified the amount of $195,000, is that right? A. That is right.

Q. Now, in addition to that there were a number of other agreements specified in the agreement with General Motors under which the Gordon Company was paid many additional thousands of dollars, isn't that right? A. Yes, that is right. That was Case and White, and Chrysler, wasn't it? And Nash?

Q. And Nash. A. Yes, sir.

Q. So that, in addition to the $195,000, the industry paid those further sums, isn't that true? A. That is correct. That was about $50,000 or $60,000 in all, wasn't it?

Q. I think Chrysler alone was about $50,000. A. Yes, somewhere around there.

Mr. Michael: We are going to produce these contracts, your Honor, and it will all be clear from them.

* * * * *

(1734) Re-Direct Examination by Mr. Farley.

Q. It is right to the point of your Honor's question. Do you have any knowledge, Mr. McEvoy, as to whether or not the settlement figure of $195,000 would have amounted to anything like three-quarters of a cent a cam based on the production of the entire industry? A. I couldn't tell you that, sir, now. I am not sure that that is accurate, because it was changed from time to time as we were getting more information.

The Master: This sheet you were pointing to lists the various companies, and in other columns lists numbers of cams, numbers of cheeks, and the total?

A. That is right, but I wouldn't want to state that is absolutely accurate.

The Master: Who submitted this list to you?

A. Arvedson.

The Master: Is there any way of telling what date this was submitted?

A. No, except by the other papers. It is October 28th.

The Master: Are these papers filed as you received them?

A. Yes. If it is important, I think Mr. Arvedson can give you those figures exactly. I probably can get them from the accounting department.

Mr. Farley: May I see that, Mr. McEvoy, please? (Mr. Farley examining document.)

The Witness (Continuing): It seems to me there was something said at one time about three-quarters of a cent a cam. I don't know whether that was the suggestion of the companies **(1735)** or not. I must have that in the back of my head somewhere. I know in our settlement we didn't consider the number of cams. I didn't know how many cams there were when I made the agreement with Redlin.

Q. (By Mr. Farley, continuing): That sheet to which you were just referring, and which the Master consulted, shows in round figures a total of over 160 million cams and crank cheeks made by the various companies who were included in the settlement, isn't that right? A. Yes.

The Master: Does that agreement purport to be the number in cams and crank cheeks that were turned on the infringing machines?

A. That is right. That might have been revised later. There were several revisions. I remember I reported to the corporation we would have to pay back $30,000 less than we had to. It was very difficult to get these things accurate. There were so many units involved.

* * * * *

(1763) Mr. Farley: I think I will call Mr. Aptekar, if your Honor please, for a few questions.

ALBERT APTEKAR was thereupon recalled as a witness on behalf of the Defendant herein, and having been previously duly sworn, testified further as follows:

RE-DIRECT EXAMINATION by Mr. Farley.

Q. Mr. Aptekar, Mr. Woehrle, I understand, requested you to make some check with reference to the type of tools that were used on the Walcott machine, and the type of tools that were made on the shapers? A. That is right. Mr. Woehrle asked me to look into that, and I checked some of the records, and I found some of the blue-prints on those two different tools that were used; one was for the Walcott lathe, and the other was for the shaper. These are the blue-prints I have; they have a number "Z" number, if you care to record that (producing documents). I don't know whether you had this or not in your record.

Mr. Farley: No, we haven't. I think we will—

A. (Continuing): "A special blade for shaping cams on cam shaft is 9-Z-32" detail 1.

Mr. Farley: I will ask that this drawing, 9-Z-32, the cam shaft tool blade, be marked in evidence as Defendant's Exhibit 293.

(The document above-referred to was thereupon marked Defendant's Exhibit No. 293 by the reporter.)

Mr. Farley: And, the drawing 9-Z-215, as Defendant's Exhibit 294.

(1764) (The document above-referred to was thereupon marked Defendant's Exhibit 294 by the reporter.)

The Witness: Mr. Farley, I wish you would mention those details on there.

Mr. Farley: Very well.

Q. (By Mr. Farley): Now, Exhibit 293 is a drawing for the tool for the cam shaft shaper. This has a date 8/3/21, and the other drawing is dated 5/1/24. These drawings show that as far as the shaper is concerned, the tool is made of hammered high-speed steel, is that right? A. That is right.

Q. And, the same with respect to the drawing for the Walcott machine? A. The same material.

Q. Hammered high-speed steel. All right, now, if you will just proceed. A. The next thing, I had one of each of those tools made up in one of our departments there to show how we maintain those tools—Mr. Woehrle has asked me to get some information as to the original cost of those tools. I was not able to get those. I went through our records and could not find any record at all of those original tools.

Q. Well, you have produced a tool which is made in accordance with the drawing— A. (Interrupting): As per blue-print.

Q. As per blue-print for the shaper. And, you have also produced one for the Walcott machine, which is also made in accordance with the drawings? A. That is right.

(1765) Q. Now, could you tell the Court anything at all about the method of grinding or upkeep on those tools? A. I can. I have not only my own recollection there, I have talked to two men in the shop—in fact, three men there—and they also verified my statement as to how they ground those tools. We had a fixture which held 12 of those tools in there.

Q. You are referring to the shaper tools? A. That is right; Exhibit 293, the blue-print. They were held in a fixture clamped across the fixture, and we went across there with a surface grinder, grinding it with sufficient strength so as to clean off the burnt edge of the tool. Now, this fellow I talked to used to be a foreman on the job there, and his name is William New. He was the foreman

of the grinding room in Highland Park. He remembered it took from 15 to 20 minutes to grind a set of tools, consisting of 12 tools in the set-up; grinding them.

Q. That is the shaper tools? A. That is the shaper tools. I talked to another man by the name of Jack Frost. He was foreman on the opposite shift of this other man, and he told me the actual time of grinding those tools used to take between 12 and 15 minutes to grind 12 tools. That is actual grinding time.

Q. To grind a set of 12 tools for the shapers, is that the idea? A. That is right.

Q. Will you point out to the Court now the difference in the method of grinding that would be required between the tool for the Walcott machine and the tool for the shaper? As I understand **(1766)** it, in re-grinding the shaper tool, the only grinding operation there was was stake grinding across one face of the tool? A. That is right.

Mr. Farley: Is that clear to your Honor?

The Master: This shaper tool, did that cut on the side?

A. Yes. It set in the shaper like this on an angle, about 70 degrees, and it cut like this (indicating).

Now, on these Walcott tools it required the hand operation all the way through. We had to grind this angle in here, this angle in here, and also put the clearance in it to clear the bearing on the cams, and also grind the clearance on the top of the tools, which was about four or five operations, and took those fellows 30 minutes to grind 12 pieces, which was almost double the cost of grinding those tools as they were on the shaper tools.

There is another point I would like to bring out, when these tools got dull, and we had 5/8 of an inch to grind back before we salvage a tool, we used to get 12 to 15 grinds on one of those tools.

The Master: You are speaking of the shaper tool?

A. Yes. On these other tools there very often they would break off and we had to grind all the way back, and sometimes we didn't get any more than about four grinds on those tools, 9-Z-215; that is the Walcott tool.

Mr. Farley: I think that is all. I would like to offer in evidence the two blue-prints of the tools, Ex-

hibits 293 and 294, and also as physical exhibits, the tools 293-A, let us say, which is the shaper tool; and, 294-A, the Walcott tool. **(1767)** I don't think there will be any difficulty about identifying them.

RE-CROSS EXAMINATION by Mr. Spohn.

Q. Mr. Aptekar, as I understand your testimony, this grinding time you have for the shaper tools, that is just what someone else told you? A. My recollection is about the same. I just verified my own recollection.

Q. Did you ever grind any yourself? A. No, I did not, but I used to grind those tools, because it was essential to have enough tools to keep the job running; and, I used to go over to the grinding room to watch them grind those tools.

Q. The shaper tool, as you remember, did they wear pretty uniformly, or wear irregularly, some of them more than others? A. Well, they wore pretty uniform, as I recall it.

Q. Wouldn't the time for grinding them vary very much? A. What they used to do, they would set them up in a fixture. For instance, if the point was burned off a little more, we would set them in a little higher in the fixture. If one is worn down a little, we would set it up a little higher so it would not require any more time to grind that in the surface grinder.

Q. But, they all had to be set up into this fixture before you could do that? A. That is right. We used to use a 12-inch rule, 12-inch scale.

Q. And, they were set up in there? **(1768)** A. That is right.

Q. And, if one was set down lower, of course, they would be grinding a long time— A. (Interrupting): That is why we used the rule, to determine the height of the tools there.

Q. But, if one had been ground a little more than the other, of course, you couldn't set that in the same depth as though that hadn't been ground so much, could you? A. We wouldn't set them too low, because we would have a rule across the top of all these tools, and set them up to that point, where they would strike the tool, and they would be all set within a few thousandths of an inch of the same point.

The Master: If you had one tool on which you needed to grind off more surface, how would you take care of that?

A. We would boost it up a little; move it up higher to take care of that.

The Master: So that you would grind that tool for some time before you would get to the other tool?

A. Not necessarily. In a surface grinder—I suppose you know how they work?

The Master: No, I don't.

A. When you start on a surface grinder you can take off probably an eighth of an inch of stock. It comes across the bottom here, and moves up and down until that is all cut right across the top; so, regardless of how much stock is on there, when you start off at one end you could come right across. You couldn't take off a quarter of an inch of stock, but 10 or 15 thousandths wouldn't make any difference.

Q. But, you had to set these individually, did you not? **(1769)** A. We usually move them up there individually; yes.

Q. Before even you start the grinding? A. That is right.

Re-Cross Examination (Continued) by Mr. Michael.

Q. I don't know that this is going to be very important, but I would like to get it straight for my own satisfaction. A. Yes, sir.

Q. Here is a tool, as I understand, brought in here as a tool out of the Melling machine. It doesn't look like this drawing, Exhibit 294. This is Exhibit 294-A. To begin with, this actual tool, Exhibit 294-A—that would present quite a different grinding problem to the one you had here in the drawing, wouldn't it? A. Mr. Michael, you realize we had to use two of those tools in a set-up, and six of these tools in here to produce our cams.

Q. Is this another exhibit? A. It is the same thing. I just ground one of each to show you the difference.

Q. Is this numbered?

The Master: It was called 294-B.

Mr. Michael: We will call the second tool the witness produced 294-B.

The Master: 294-A has a narrow point on the end of it.

Mr. Michael: Yes; a reduced narrow point.

Mr. Farley: There are the ones taken out of the machine. Does that help (indicating)?

(1770) Mr. Michael: Do we need these in evidence?

Mr. Farley: I don't think so, except this is a full-sized tool.

Mr. Michael: Hadn't you better withdraw these two, then—294-A and 294-B?

The Master: Suppose you do. It will avoid cluttering up the record.

The Witness: They are identically the same tools outside of being a little shorter.

Mr. Farley: I think that is all right.

Mr. Michael: Will you withdraw them on the record?

Mr. Farley: Yes. I will withdraw those so that the record may be clear, and state that the Exhibit 294 is a drawing of the tool which was introduced in evidence as 243.

The Master: Wait a minute. Is it? It is a drawing of another tool.

Mr. Michael: It isn't even that.

Mr. Farley: I think it is.

Mr. Michael: I wouldn't try to say this drawing was of either of those tools. Why don't you just offer those as tools—

The Master: Let the witness explain.

Mr. Michael: What about this other tool, are you going to put this in?

Mr. Farley: It is still in.

Mr. Michael: What is the number of it?

Mr. Farley: Exhibit 244.

Q. (By Mr. Michael, continuing): Now, Mr. Aptekar, we have here Exhibits 243 and 244. Are those like the tools you **(1771)** actually used in the Walcott machine? A. That is right. Those are the actual tools.

Q. And, you used six of Exhibit 244 and 2 of Exhibit 243, is that right? A. That is right.

Q. Now, neither of these tools seem to correspond to the drawing, Exhibit 294? A. As I understand it, we buy those tools outside, and they are made according to this drawing, and we grind those to suit our job as you see on our Exhibits 243 and 244. Mr. Farley, I will ask you to bring my other tool back, because I don't believe this is the tool.

Q. The only difference is that it hasn't teeth on it, is that right? A. This would be in the exhibit, I believe.

The Master: Maybe you better put that other in.

Mr. Farley: Exhibit 294-A still stays in the picture.

The Master: It was 294-B before.

Mr. Michael: Will you straighten it out, Mr. Farley? You can start over again and name that 294-A. You have withdrawn 294-A and 294-B.

Mr. Farley: I don't see any particular point to it, anyway, that we should be cluttering up the record.

The Witness: If I was buying these two tools, I would say I would have to pay more money for this than this (indicating); Exhibit 294, the blue-print, I would say more money for this tool, if I was buying it, than I would Exhibit 244.

(1772) Mr. Farley: Let me have a little examination on this, if you don't mind.

RE-DIRECT EXAMINATION by Mr. Farley.

Q. As far as the tool shown in 294 is concerned, that drawing shows the tools as you did actually buy them? A. That is right.

Q. A piece of practically hammered high-speed steel, 3/8 of an inch square; and, on one side the tool would have— A. (Interrupting): 7 notches.

Q. 7 notches, back from the point; is that the idea? A. That is right.

Q. And the tool as purchased, if the manufacturer followed the drawing, will have a 30-degree clearance angle on the front edge? A. That is right.

Q. As far as the top edge of the tool is concerned, the drawing doesn't show anything at all about rake, does it?

A. No. We would have to grind that ourselves to suit the job, and we found we had to grind it on four different angles in order to produce the proper tool for cutting the cam shaft.

Q. So far as the size of the stock is concerned, the square stock, the tools which you produced show they are made of that size stock? A. That is right.

Q. If we take Exhibit 243, it also shows the same thing? A. Identical same thing.

Q. As far as Exhibit 243 is concerned, that tool, it shows the tool **(1773)** is substantially pretty close to exactly the same length as shown in the blue-print, isn't that correct? A. It is.

Q. It is a little bit shorter, probably 1/16 of an inch shorter of the blue-print size of 2⅝ of an inch? A. That is right. That was evidently ground off in grinding the radiuses on the angles on that tool.

Q. As far as the clearance angle on the front of the tool is concerned, that shows the 30 degrees? A. Just about 30 degrees.

Q. And the size of the tool shows 1, 2, 3, 4, 5 of the notches, and a half of the notch in front has been ground off? A. That is right.

Q. Now, the tool, Exhibit 243, has been ground off on the two sides adjacent to the front edge for the purpose of going into the space to start the cut on the bearings—or, is it at the finish of the cut? A. At the finish of the cut. You will not hit the bearing, the center bearing, and front bearing.

Mr. Farley: Does that straighten it up?

Mr. Michael: That is all right.

Re-Cross Examination by Mr. Michael.

Q. Now, in the use of the Walcott tools, when one of them wore, or became worn, you just take out that one tool, wouldn't you, or adjust the one tool? A. If it burnt out one tool we replace that one tool in particular.

(1774) Q. And, in the shaper, when one tool, or more tools became worn, you would take the whole bunch out? A. No, we take out those tools worn out. If it is one, we take one out; and, if it is three, we take three out.

Q. When you ground them, you ground eight at a time? A. Well, we used to have about 500 tools ahead; when we ground them, we ground 12 at a time.

Q. And those 500 tools were just in a pile in a box? A. No, we had racks to keep them in, aluminum racks with holes in to fit the tools, and we kept them in an upright position with the point upwards so that it would not damage the point of the tool.

Q. Were they kept in the order with reference to the way they were taken out of the machines? A. No. It didn't make any difference what size or length of the tools it was, because our machines were adjustable to the tool.

Q. Some of those might be worn at one thirty-second, or some more, or some less, isn't that true? A. Yes. They would be 15 to 35 thousandths.

Q. But, the variation in that dimension over 500 tools would be much greater than that, wouldn't they? A. I don't hardly think so.

Q. Do you know? A. Unless we strike a hard spot in the cam shaft and we break off the point. They would break off a little more, probably 15 thousandths.

Q. In this fixture you mounted 8 tools? A. No, 12.

Q. 12 in the fixture? **(1775)** A. That is right.

Q. And the distance you would have to grind would be in each case the maximum wear in any one of those 12 tools. I mean, you would have to go up with your grinding as much as the maximum wear on any one of the 12 tools? A. Well, our surface grinders are so equipped you can take off 1/32 as well as you can 5 thousandths. As I explained before, the circular notch of the wheel, starting at one end, you can take off as much stock as you want.

Mr. Farley: May I interrupt? I think you and Mr. Aptekar were talking at cross-purposes there a moment ago when he said the variation of 15 to 35 thousandths. I think what he had in mind was the amount that would be required to be ground at each re-grinding.

The Witness: That is right.

Mr. Farley: But, what you were talking about, I am quite sure, in that 500 tools there might be considerable variation, you might have 1 tool in which 3/8

of an inch has been ground off already, and another was less; is that your idea?

Mr. Michael: No.

Mr. Farley: I am sorry. I thought you were at cross-purposes.

Mr. Michael: I was trying to bring out there was quite a variation in the extent of wear on the ends.

The Witness: There is some variation. There was a 15 to 35 thousandths variation, roughly speaking.

Q. (By Mr. Michael, continuing): As far as the wear extended we will say, it necessitated your grinding, and you ground **(1776)** across the whole face of the tool, didn't you? A. That is right.

Q. The whole end of the tool? A. That is right.

Q. Down to the line where the wear ceased to show? A. That is right.

Q. And, if you had 12 tools mounted in that fixture, you would have to grind to that extent, before you finished the job? Your wheel would have to be fed in or up to that point before you finished the 12 tools? A. Not necessarily. We would send in a box of tools—I don't recall how many in a box—but, I imagine around 50, and the fellow at the grinding machine would sort those out. He would take the ones just worn a little bit, and grind not so much off of those as the ones that were worn more.

Q. Who ground the tools, do you know? Is he still out there? A. Yes, sir, he is.

Q. Who is he? A. One fellow's name is Mr. Jack Frost; he is working now in the clutch department in the motor building.

Mr. Michael: That is all.

Re-Direct Examination by Mr. Farley.

Q. If the man on that tool-grinding job didn't have sense enough as a toolmaker when he was going to start grinding these shaper tools to pick out and sort the ones with the small amount of wear from the ones with the greatest amount of wear, do you think he would stay in the tool room very long? A. I don't think so.

(1777) The Master: What difference would that make if you could adjust it?

A. I don't believe, your Honor, that you quite understand this. Supposing we have this tool run down 1/32 of an inch, and the next tool was only worn out five-thousandths. Supposing this man took the 8 tools out and set them in the grinder. He would take off 1/32 of an inch off of this particular tool. On the other hand, if you had a box of tools of 50, he would look them over in a hurry and set them in the machine, and he sees fit to grind so much off, and then to run along and set the grinder at the back edge of the tool.

The Master: He might use a little extra time, but he wouldn't damage the tools any.

A. That is right. Is that clear enough?

* * * * *

(1781) Mr. Farley: Now, in view of Mr. McEvoy's testimony yesterday afternoon, and Mr. Michael's cross examination of him, and the inferences that might be had from Mr. Michael's cross examination, I am going to suggest this morning that we have a departure from ordinary practice, and I am going to ask your Honor to swear me as a fact witness.

Mr. Michael suggested or, rather, insinuated, by his cross examination of Mr. McEvoy, that the Ford Motor Company had been invited to join this particular settlement. I came here on December 1st, 1929, and have been in charge of the entire patent litigation of the Ford Company since that time; and, it was in 1930 that these negotiations for settlement occurred.

Mr. Michael: I take exception to that, your Honor. They occurred, as far as we were concerned, they were opened in July, 1929. That is when the meeting was had between the manufacturers, and that is when the meeting was had with us.

Mr. Farley: Were you present at the meeting in July, 1929?

Mr. Michael: I was.

Mr. Farley: Very well. That was not according— I refer your Honor to the communications in the record, read into **(1782)** the record by Mr. Cooper, during the cross examination, I am sure, of Mr. Crawford.

I refer to page 319 of Volume I. I don't think it is necessary to again re-read the Exhibit 66, which is

stated on that page. If your Honor wishes to read that at the present time—

The Master: Just a minute, and I will read it.

Mr. Farley: Just for a minute, the letter clearly states, written by Mr. Halbert to Mr. Crawford, that the meeting was held for the purpose of giving all the alleged infringers of the Gordon patent an opportunity of being directly advised by the representatives of the National Automobile Chamber of Commerce, as well as its patent counsel, of the details bearing on the present situation, as well as the opportunity for an exchange of views.

(The Master thereupon examined the communications referred to.)

Mr. Farley: As you are reading that, your Honor please, I would like to call your attention particularly to the top of page 321, which reads:

> "With this in view Mr. Kimball of the Walcott Company made certain suggestions which would give the Walcott Company control of the Gordon patent with some provision whereby the Walcott Company would operate to the advantage of the automobile trade."

The Master: Well, do plaintiffs have any objection to Mr. Farley testifying to what facts he knows?

(1783) Mr. Michael: I don't see that Mr. Farley is in a position to testify as to anything regarding happenings in 1929.

Mr. Farley: I am willing to admit that that is perfectly true, your Honor. I would like, however, to call attention to Mr. McEvoy's statement that it was not until after the bill of complaint was filed in 1930 that General Motors began to have any negotiations with the plaintiffs concerning settlement. And, certainly—let me ask Mr. Michael a question. Will he answer it? Did you not intend, by your cross examination of Mr. McEvoy, to insinuate that the Ford Motor Company had been invited to join this settlement?

Mr. Michael: Which settlement?

Mr. Farley: The settlement you people made with the General Motors Company.

Mr. Michael: I don't know that I said that.

Mr. Farley: Are you willing to admit, Mr. Michael, as far as the plaintiffs were concerned, there was no invitation to the Ford Motor Company to join that settlement?

Mr. Michael: Well, there was invitation to the Ford Motor Company on occasions to settle.

Mr. Farley: On what occasions, sir?

Mr. Michael: In the notice of July 12, 1929.

Mr. Farley: Will you produce the notice of July 12, 1929?

Mr. Michael: It is in the record. And, later a telegram to the Ford Motor Company, which is in evidence here.

Mr. Farley: Very well. That is one of the things I want to testify about. I am perfectly responsible, and I take **(1784)** the entire responsibility for the Ford Company not answering your telegram of November 18, 1930.

Now, there is another point, your Honor please, and this goes directly to the charges that are being made by these plaintiffs here. I would like to refer you to page 305—304 and 305 of the record before Judge Tuttle.

(The Master thereupon examined the pages above-referred to.)

Mr. Farley: I have definitely in mind, your Honor, certain questions of yours and certain questions of Judge Tuttle on the proposition that after the Court of Appeals decided the Walcott machines to be an infringement, as to whether the Ford Company Ford Motor Company was guilty of willful and wanton infringement by continuing to use the Walcott machines for a period of some six or eight months, I think it was—at the most, a matter of months. Mr. Spohn has referred to it as years.

Mr. Spohn: What is the fact? July, 1929, to February 3, 1931.

Mr. Farley: 1930, sir. 1930 the Ford Motor Company started its use of the Pioch machines; not 1931.

Mr. Spohn: But, when did it stop using the Walcotts?

Mr. Farley: As soon as it got sufficient Pioch machines.

Mr. Spohn: That was February 3, 1931.

Mr. Farley: February 3, 1931.

Mr. Spohn: Now, is that years or months?

Mr. Farley: It is months.

Mr. Spohn: It is months.

Mr. Farley: Well, it is a question of mathematics. I **(1785)** wouldn't discuss that or argue about it.

Mr. Farley: I call your attention particularly to page 304 of the record down below:

> "Q. This letter, Mr. Crawford, from the Walcott Machine Company was received by the Ford Motor Company in due course of business after its date, which purports to be July 30, 1929?"

I think we can skip the balance of the colloquy that occurs until we get to the bottom of the page where Mr. Cooper says:

> "I will take an exception, and I will now make an offer to prove, on the point of the last inquiry, that my offer to prove is that when this letter from the Walcott Company states as follows: 'Wish to say that you have no doubt been informed of the plan for the purchase of Gordon and Redlin patent, which will eliminate any cost of damages to the Ford Motor Company.'"

Now, if your Honor please, I was reading over the record last night, and I read in several places statements by Mr. Spohn to the effect that he was urging upon you and this court that punitive damages should be assessed because of the expenses of the accounting.

As the record now stands, and if counsel for the plaintiff are willing to accept my statements as an officer of the court, as to the facts, it is perfectly agreeable to me. If they feel they should have the right to cross examination, I am perfectly willing to be sworn and take the stand and submit to cross examination.

(1786) As to the proposition of the Ford Company not joining this settlement, or not being invited to join this settlement, I know the facts, and the facts are that I have been here since December 1, 1929, and

the settlement with General Motors was effected on October 30, 1930. And, I must state, as an officer of the court, with full knowledge of the facts, that at no time was an invitation given to the Ford Motor Company by General Motors, or by the plaintiffs, to join or indulge in any settlement whatsoever.

The letter to which they refer of July 15, 1929, was the ordinary threat of infringement.

Mr. Michael: And an offer to settle.

Mr. Farley: And an offer to settle upon a perfectly unconscionable sum.

Knowing the facts of this situation as I do, and having in mind—and, I am saying this with great deliberation, your Honor; I am thinking carefully of every word I say—having in mind fully the cross examination by Judge Tuttle of Mr. Crawford, and particularly his remarks to the effect that:

"You say you do not owe these people a penny and you would not now pay them a penny," I will state that as counsel for the company I will still advise the company—I advised the company throughout all of this—and, I am still advising the company that we do not owe these people a penny.

Now, I will admit that that may sound like argument. If, however, counsel for the plaintiffs wish to cross-examine me on that subject, I am perfectly willing to be sworn and take the stand.

Do you wish me to take the stand, gentlemen?

(1787) Mr. Spohn: For what purpose, Mr. Farley?

Mr. Farley: Are you willing to accept my statement?

Mr. Spohn: The statement you advised the company they didn't owe the plaintiff any money?

Mr. Farley: Are you willing to accept my statements that we were not willing to join any settlement? I am going to make the further statement. I offered a settlement to Mr. Gordon. I offered to Mr. Gordon, when he was here in March, 1932—he comes here appearing before this Court, if your Honor please, that he has been oppressed by the Ford Motor Company and driven out of his business.

The Master: Just a minute, I think if you are going to make these statements, as to facts, you should be sworn.

Mr. Farley: I would prefer to.

The Master: Then, the other side gets an opportunity to object to any statements which are not relevant to the inquiry, and also so that they have an opportunity to cross examine. I think I will swear you and take your testimony on the point.

I. Joseph Farley was thereupon called as a witness on behalf of the Defendant herein, and having been first duly sworn, testified as follows:

The Master: Now, you can make your statement in detail.

The Witness: On December 1, 1929, I came to Detroit from New York, and joined the firm of Longley & Middleton, who were counsel for the Ford Motor Company.

I was placed in charge of patent matters, and became **(1788)** patent counsel for the firm, and I have been in charge of the patent matters of that firm, and of the patent litigation of the Ford Motor Company, since that time until the present time.

All of the matters in connection with this present litigation have been handled by me from the time that litigation seemed imminent. I knew of this litigation on the Gordon patent shortly after I came to Detroit, and it was not until a telegram was received by the Ford Motor Company on November 18, 1930, that any proposition or offer for settlement was ever brought to the Ford Company, or submitted to the Ford Company by the plaintiffs, unless it could be said that the notice of infringement received in June or July of 1929 could be considered as an offer for settlement.

I know that a settlement was effected by General Motors Corporation on behalf of the entire industry from which settlement the Ford Motor Company was specifically excluded, and that settlement was made on or about October 30, 1930.

I know that no offer to participate in such settlement was ever made to the Ford Motor Company, nor was the Ford Company ever invited to join such settlement.

I know that, as counsel for the Ford Motor Company, the company receives on an average of 50 to 100 letters a year of the type received from the Gordon Form Lathe Company in June or July of 1929, charging infringement and offering to settle.

The telegram which was introduced here in evidence, which was sent November 18 from the attorneys for the plaintiffs, was immediately called to my attention. By that time I had **(1789)** made sufficient inquiry or study into the Gordon patent to be thoroughly convinced that there could be no common ground or meeting of the minds of the Ford Company with these plaintiffs.

I, therefore, advised the Ford Company that it had, in my opinion, a thorough defense to the charge of infringement, and that, in my opinion, the wisest course to follow was to pay no attention to the telegram referred to.

I think that is all.

The Master: What settlement proposition then did you make in 1932?

The Witness: In 1932, if your Honor please, Mr. Gordon, together with Mr. Sessions, came out to inspect the Pioch machines. I explained to Mr. Gordon at that time that he and his company were, in my view and my knowledge of the law, just simply throwing their money away in attempting to gain any recovery from the Ford Motor Company on his patent, in view of the facts as I knew them.

I was thoroughly conversant with the law relating to accounting; I knew at that time of the decision of the Court of Appeals in the Walcott case.

I felt at that time, and I still feel, that the decision of Judge Simons was absolutely correct in holding the Walcott machine to be a non-infringing machine.

I knew the provisions of the patent law, the entire intent of which is that after an invention is made open to the public, that the public should have the free right to use such invention. I knew that the Walcott machines, which were held by the Court of Appeals to be an infringement, were nothing but **(1790)** the practice of the Blanchard principle, a patent for which was issued by the United States Government in 1819.

I assumed that with the knowledge and information we had, that if we put the Blanchard patent, which was not in evidence in the Walcott case, in evidence that the Court of Appeals, and the Courts, would recognize that principle.

I knew that we had uncovered many items of prior use that had not been before the Court in the Walcott case.

I knew of the Stoddard-Dayton defense. I did not know at that time, however, that valuable evidence concerning the Stoddard-Dayton defense would be put beyond our reach; I thought of Mr. Gordon at that time as a man who was primarily interested in the manufacture and sale of machines, the machining of cam shafts.

I knew that his Gordon machine had proved commercially unsatisfactory and unusable to the Ford Company, as well as to other companies.

We at that time had developed, and had in use, a number of Pioch machines which were far superior not only to the Gordon machine, but also to the Walcott machine which supplanted the Gordon machine. I told Mr. Gordon that he could not hope to recover any money in this case, and I offered him the full and exclusive rights to manufacture and sell the Pioch machines.

That was my offer of settlement.

The Master: Any cross examination.

Mr. Spohn: Your Honor please, in view of counsel's testimony on the matter, we would like a five-minute recess. We don't know whether or not we wish to cross examine counsel. **(1791)** May we have that?

The Master: Yes.

(A recess was thereupon taken.)

The Master: Did the Ford Motor Company ever make any effort to get into the settlement with the members of the National Automobile Chamber of Commerce?

The Witness: We knew nothing about it, your Honor, until after it had been consummated.

The Master: This letter of Halbert's, at least, states there was a discussion of settlement to be negotiated. It hadn't reached any final stage or form at that time, but they were talking about settlement.

Page 321, the second paragraph: "Very little was said regarding the apportionment of costs, in the event that it should be ultimately decided to work out a settlement along the line suggested. There was, however, some indication that in the event of a settlement by way of acquisition of title to the patent, which would necessitate an expenditure of a definite fixed sum, this amount could be apportioned among the various alleged infringers, probably on the basis of their respective outputs."

The Witness: Well, I know nothing about that matter except as I gained it from this letter. I do know, however, that from December 1, 1929, until the suit was brought, nothing ever came to the attention of the Ford Company, or to me as counsel of the company.

I know very definitely that any matter of that type, had it gone to the company, would have been immediately called to my attention.

(1792) The Master: Did you know Mr. Halbert?

The Witness: I knew Mr. Halbert; yes, sir.

The Master: Did he talk over this situation with you?

The Witness: Yes, he did talk over the situation with me, but very briefly.

The Master: Did he not say anything about—

The Witness (Interposing): I will try to recall as well as I can now—I would like to have that question stated.

The Master: Didn't he say anything in his discussions with you as to the fact that this matter was being considered by the Automobile Chamber of Commerce, and that they were trying to work out some plan of settlement?

The Witness: Yes. I do recall now that Halbert and I had some discussions. He told me of having attended a meeting, and this particular meeting, as I recall it now, the way he got into that meeting was through the attorney for one of the other companies—I am not sure whether it was Continental Motors or just which company it was

—who called him up and suggested, or, rather, told him about the meeting, and said although it was primarily a meeting of the attorneys and others who were members of the Automobile Chamber of Commerce, that it would be a good thing for him to come along and hear what was going to be said, that he would gain some valuable information, perhaps, concerning the litigation that they had been through with the Walcott Company; that Mr. Stackpole, who had conducted the defense of the Walcott suit, Mr. Stackpole was a member of the firm of Fish, Richardson & Neave, was going to be present, and would **(1793)** recite all of the facts concerning the Walcott case.

I know that I discussed with Halbert the proposition that the Ford Company was in an altogether different position than any of the members of the Automobile Chamber of Commerce; that we were not a member of the Chamber of Commerce, the Automobile Chamber of Commerce; that in view of the fact that the Automobile Chamber of Commerce had taken over the defense of the Walcott case, that there was no question whatsoever about it, in view of the decision in the Reo Gear Grinding case, that in this circuit, the Sixth Circuit, any automobile company who was a member of the Automobile Chamber of Commerce was definitely in the position that the decision in the Walcott case was res adjudicata against them, and that although additional defense material had been uncovered, none of the members of the Automobile Chamber of Commerce, General Motors, or any of the other companies who had been sued, could be in the position to avail themselves of the additional defense material; and that, therefore, the position of the Ford Company was quite different and distinct.

The Master: You saw this inter-office communication of Halbert's at the time, I presume?

The Witness: No, I wouldn't say that I would, your Honor.

The Master: When did you first see that?

The Witness: I don't think—I know definitely that I did not see that until it was produced at the trial before Judge Tuttle in 1934.

(1794) The Master: Didn't Halbert have a file that he turned over to you in connection with the case?

The Witness: Well, I think you are right, now. I probably am mistaken about that. I probably did. He did have a file, and probably I did see that in the file.

My recollection was that that had not come to my attention until the trial before Judge Tuttle, but I guess I am mistaken in that. There was a file in the office when the telegram was received on November 18, 1930. Mr. Longley handed me that telegram, and then for the first time I got the file of the case out. And, while I haven't any present recollection of having read that communication at that time, I probably did read it. It must be in the file.

The Master: What date did you say this was when you got the file out for the first time?

The Witness: The day the telegram was received, on November 18, 1930. It might have been the 19th, but at any rate Mr. Longley brought the telegram in to me and told me I had better look into the file of the case.

I must say that I don't have any present recollection of having read that communication at that time, or giving any particular thought or attention to it. My present recollection is that as far as that communication is concerned, and the information contained in it, that I first gave any consideration to it when it was produced at the trial before Judge Tuttle.

The Master: Go ahead, Mr. Michael.

(1795) Cross Examination by Mr. Michael.

Q. When did you have this talk with Mr. Halbert, Mr. Farley? A. I couldn't give you a definite date as to when I had a talk about this matter with Mr. Halbert. When I first came out here, I had turned over to me the matter of working up the defenses and looking into the patent situation on the Ferguson Dock patent, a suit which had been filed against the Ford Motor Company shortly before I came. I would say that I devoted my time for the first five or six months that I was out here almost exclusively to the Ferguson case, and from time to time in that period Halbert and I, going to lunch and meeting one another in the office, would discuss various patent matters.

So, it could be any time between December, 1929, and, let us say, the summer of 1930 that I may have talked to Mr. Halbert about this particular case.

Q. But, you think it was before the company received this telegram? A. Oh, definitely before the company received the telegram.

Q. And, did Mr. Halbert tell you at that time that he had attended this meeting with other manufacturers? A. Oh, yes. I knew Halbert had attended that meeting.

Q. Did he tell you that he had attended that meeting on the authorization of Mr. Crawford? A. He told me he had called Crawford and asked Crawford if Crawford would object to him going to the meeting. He told me he had received a call from some of these other attorneys, just which one it was, I am not sure, I think it probably—my present recollection is that he had been called by Mr. (1796) Zewadski of Whittemore's firm, with whom Halbert was rather friendly, and that when he heard from Zewadski about this meeting he called up Mr. Crawford and told Crawford about the meeting, and asked if Crawford would object to his going to it.

I know very definitely that no formal communication was ever received by the Ford Company or Halbert, as attorney for the Ford Company, inviting him to attend the meeting. He got to the meeting, I might say, through the back door.

Q. How do you know there was no formal invitation extended to Mr. Halbert as a representative of the Ford Company to attend the meeting? A. Because if there had been a communication, a formal communication of any type, I am quite sure it would have been in the file of the case, and I know that no such communication was in the files of the case.

Q. Is it your understanding that Mr. Halbert then attended this meeting just as a casual observer, and not on behalf of the Ford Company? A. If you knew Mr. Halbert as well as I did, he was the type of fellow who tried to keep his ear close to the ground and get all the information he could from any source whatsoever concerning any matter he had anything to do with it. It was very characteristic of Halbert, knowing a meeting of that type was to be had, to attempt to be present, and to listen to what was going on.

Q. Well, did he go as a representative of the Ford Company? A. I would say that having called up Mr. Crawford and getting (1797) Crawford's permission to attend the meeting, he certainly was there as a representative of the Ford Company.

Q. And, don't you know that he did so attend the meeting, and had the specific instruction from Mr. Crawford that he, Halbert, was not in any way to commit the Ford Company? A. I don't know that as a matter of personal knowledge, except as I gathered from the hearsay information as contained in this letter, and as Halbert told me about it at the time. Not at that time, because I was not here at that time. This meeting was held on July 8, 1929, in accordance with the information I get from Exhibit 66.

I was in New York on July 8, 1929, and I was in New York until December 1, 1929, when I came to Detroit.

Q. And, you have no personal knowledge of anything that happened prior to December, 1929? A. Well, that is a rather broad statement, Mr. Michael. I have a lot of personal knowledge of things that happened prior to December, 1929.

Q. Well, in respect to this matter we are discussing. A. I would say that, yes, I had personal knowledge of the decision of the Court of Appeals in the Walcott case, and I also had personal knowledge of the decision of the Court of Appeals in the Reo case—I am not quite sure whether that case was prior to December 1, 1929, or not—I think the Reo case was decided in the early part of 1930. I have personal knowledge of those because I make it a practice to read the decisions of the Circuit Court of Appeals and other courts in patent matters as they are handed down. That is the only **(1798)** personal knowledge I had prior to December 1, 1929, of this Walcott litigation.

Q. Did the company, or anyone connected with the company, consult you about this matter at any time after you went with the law firm prior to the receipt of the telegram in November of 1930? A. No. I might say, in answer to that question, Mr. Michael, that it wasn't until the telegram was received that I even knew there was a file in the office of Longley & Middleton having to do with the Gordon patents.

Q. Mr. Farley, have you got Exhibit 72 in the trial below; a paper exhibit that was not reproduced in the record?

(The document was thereupon produced.)

Mr. Michael: That is all, your Honor. But, I think in view of the fact Mr. Farley has taken the stand as

a witness, that all of the statements made prior to his testimony should be stricken from the record regarding this matter.

The Master: Well, I don't know whether some of those statements may not be necessary to be in the record by way of explanation of the reason why he was testifying, or the statement of counsel as to why he wanted to testify. As far as the statements made prior to Mr. Farley's being sworn are concerned, which are statements of fact, those will be disregarded as far as drawing any conclusions from them is concerned.

(Witness excused.)

Mr. Farley: If you will excuse me a minute, your Honor, while I consult this exhibit.

(1799) (Mr. Farley then examined Exhibit 72 of the trial below.)

I would like to now offer in evidence in these proceedings, if your Honor please, the Exhibit 72 that was offered before Judge Tuttle, but which was not reproduced in the record.

The Master: Was it admitted then?

Mr. Farley: It was admitted.

The Master: Is there any necessity for offering it over? As I understand it, we have—

Mr. Farley (Interposing): Well, the only necessity there might be would be that in the consideration of the matter before the Court now, the accounting, this particular batch of correspondence was produced and shown to Judge Tuttle during the trial below. It was not reproduced in the record because of the fact that we felt the situation concerning any charges of willful and wanton infringement had been fully disposed of by Judge Tuttle's opinion.

In view of the decision of the Court of Appeals, and in view of the statements by counsel for plaintiffs here in these proceedings, that they have been urging continually, and apparently intend to continue to urge upon your Honor that the Ford Company was guilty of willful and wanton infringement by using the infringing machines during the period after the decision of the Court of Appeals in the Walcott case, this corre-

spondence is very material right now to the present inquiry.

The Master: May I see it?

(The document was thereupon handed to the Court.)

(1800) Mr. Farley: I would like to not re-offer it. It already has been offered. I would like, however, to submit it to the Court and have you read it right now. You will notice, your Honor please, that the correspondence definitely refers to the patent guarantee of the Walcott Company, or, rather, as contained in the Ford Company's purchase order, and the stand of the Walcott Company in the iterations and reiterations that they were endeavoring to work out some sort of a plan for the purchase of the Gordon patent, and were assuring the Ford Company, until some time well after 1929, that it was their intention to stand behind their patent guarantee and to fully protect the Ford Company in this matter.

I. Joseph Farley thereupon resumed the stand as a witness on behalf of the Defendant herein, and having been previously duly sworn, testified further as follows:

Cross Examination (Continued) by Mr. Michael.

Q. And, isn't it a fact, Mr. Farley, that you, as counsel for the company, relied on that guarantee as excusing the Ford Company for not having anything to do with the settlement? A. No, it is not. I didn't know of that situation until, I would say, after the filing of the bill of complaint in this case.

* * * * *

(1804) The Witness: It was not until after General Motors' settlement that the Ford Company knew that the Walcott Company were not going to stand back of their guarantee, and that the Walcott Company were not going to make any arrangement under their guarantee that would result in the machines at the Ford Company being licensed under the Gordon Patent.

(Witness excused.)

* * * * *

(1810) Mr. Spohn: Your Honor, may we at this time respond to the tender with respect to these contracts?

The Master: Yes.

Mr. Michael: I would like to make a statement in connection with them, your Honor, just to trace the history of this thing a little bit.

On the 12th of April, 1929, the Court of Appeals, Sixth Circuit, decided the Walcott case, holding the patent valid and infringed by the very machines involved in this case. The notice of the infringement from the plaintiff to the entire industry, advising the industry of that decision and containing an offer to settle with anyone who wanted to settle on the terms named in the notice, was sent out on the 12th of July.

The Ford Company received such a notice. It is reproduced here in the record, the original notice to the Ford Company.

The meeting of manufacturers was called by the N. A. C. C.; that is the National Automobile Chamber of Commerce, and they met in the N. A. C. C. offices in the General Motors Building on the 9th of July, 1929. Mr. Halbert's report to the Ford Company—that meeting is in the record, stating, I think, that there were 14 to 18 infringers present at the meeting.

Then, towards the end of July Mr. McEvoy invited the (1811) plaintiff and its counsel to meet with him in his office in the General Motors Building. That meeting was attended and had, and at that meeting an offer by the plaintiff of settlement was made.

In September following, also in 1929, Mr. McEvoy wrote stating that the offer was not acceptable to them.

The Master: I wonder if, since you are stating facts similar to the statements Mr. Farley made, as to whether or not it wouldn't be better to put you under oath, too?

Mr. Michael: All right.

JOHN W. MICHAEL was thereupon called as a witness on behalf of the Plaintiff herein, and having been first duly sworn, testified as follows:

The Master: That will be retroactive to include what you have already stated.

The Witness (Continuing): In September, 1929, as I say, Mr. McEvoy wrote stating that the offer was not acceptable. A number of suits were then filed, and the record of them is in the bill of complaint in this case.

In December, 1929, suits were filed against the Muskegon Motor Specialties Company, Continental Motors Corporation, and the Jackson Motor Shaft Company, and the Hudson Company; and, in February, 1930, suits were filed against the Reo Company, Packard and General Motors. Then, in the summer of 1930 this matter of settlement was reopened, and finally consummated in an agreement which was signed in October, 1930.

(1812) Now, between the notice of infringement, which we sent out following the Court of Appeals' opinion, and the reopening of the settlement negotiations with General Motors in the summer of 1930, settlement agreements were signed with the following companies and in the following amounts:

Chrysler, July 17, 1929, for $46,000.

White—there were two agreements; they have been placed—one of them is in evidence here. The White agreements, one of them was dated December 21, 1929, covering the past, and the other was dated February 6, 1930, covering the future.

The one covering the future was in the amount of $4,000. The one for the past was in the amount of $2,465.92.

Then, there were two agreements signed with the Case Company, both dated February 18, 1930, and one covering the future and one the past.

The future was in the amount of $4,000; the past in the amount of $1,055.28.

Then, there was an agreement with the Nash Company, March 1, 1930, in the amount of $12,000.

These various amounts paid, actually paid, under these settlements, together with $195,000 paid under the General Motors' agreement, made a total of $264,521.20, and under

Section 8 of the General Motors' agreement these sums were guaranteed to the plaintiff, in addition—I mean, the sums under these other agreements which have been made prior to the General Motors' agreement had been guaranteed to the plaintiff, in addition to the amount named in the General **(1813)** Motors agreement.

Just prior to the testimony of Mr. Dahl, Mr. Farley stated at page 743 of the transcript:

> "Q. Are you aware of the fact, Mr. Gordon, that the White Motor Company agreement dated February 6, 1930, contained a paragraph to the effect that neither of the parties to that agreement would use that agreement in connection with any litigation against any other parties based on infringement occurring prior to the date of the agreement?"

Now, I have here in chronological order a complete file of these agreements, all of them. They are executed duplicate originals, including the General Motors' agreement, and all of the others, and amongst these will be found the White agreement that Mr. Farley demanded we produce.

Incidentally, on that I would like to point out all these settlements were produced before Judge Tuttle. They were part of the General Motors' agreement, attached to it; were produced and handed to counsel for the defendant. They offered them. I don't recall now how long they had them, but eventually they came back to us, and Mr. Farley, as I understood his remarks a few days ago, tried to make some point of the fact that they never had the agreements, or when they made up the record they couldn't find them.

There has been no demand on us at any time for them. They were handed back after they had been inspected, and there has been no request for them since then until here in these proceedings.

Of course, defendant in taking appeal to the Court of **(1814)** Appeals had the duty of preparing its own record and its own praecipe, and had they wanted these, they could have had them. However, they are all here at this time.

Now, this reference to the agreement that neither party would use this thing against any other party, or in connection with that, I would like to point out that the first agreement, settlement agreement, was made with Chrysler. It covered the future; the release of all their machines for

future production. In the Chrysler agreement it was recited—this is the fifth section of the Chrysler agreement; I am reading from it:

> "It is further agreed that in the event of litigation—"

remember, this agreement covered the future. They didn't settle for the past on the basis of so much a cam. That was left open. Our offer was to the effect we would settle for either or both; the future or the past. Some took the future; some took both. Chrysler took only the future, and it was quite natural that this section would have been placed in the agreement, and it was.

> "It is further agreed in the event of litigation directed to a recovery for infringement of said patent number so and so prior to April 13, 1929, neither party hereto shall in any wise use this agreement as affecting the measure of damages for such infringement."

Now, obviously, that could only mean in the event we sued Chrysler for the past, that neither of us could use this agreement as the measure of damages for the past. That same provision was carried through every other contract that was made for future settlement, for settlement for the future, both **(1815)** with Case and with Nash, and with White.

All of the agreements are here. The White provision is exactly the same in that respect.

> Mr. Farley: Would you mind reading the White paragraph of the agreement into the record, please?

The Witness: In White it is, likewise, Section 5. I am reading:

> "It is further agreed that in the event of litigation directed to a recovery for infringement of said patent No. 1,542,803 prior to the date hereof, neither party hereto shall in any wise use this agreement as affecting the measure of damages for such infringement."

Now, in connection with the White agreements, I have also included in this file all the correspondence which passed back and forth between the White Company, represented by Mr. Cooper, and ourselves, which shows very clearly that

at first they only wanted an agreement for the future, and that was drawn and sent to them, and they later included, or also settled for the past. And, that fact is also borne out by there being two separate agreements, and the inclusion in the agreement covering the future of this section I have read.

I would like to offer this. I wouldn't say I would like to offer it; I am producing it here, this file containing all these agreements, in response to demand of counsel for the defendant, and I will ask that the entire file, including the agreements and the correspondence with the White Company, be marked for identification as Plaintiff's Exhibit RR.

(The file above-referred to was thereupon marked Plaintiff's Exhibit RR by the reporter.)

(1816) Mr. Michael (Continuing): I will explain in that connection that in making up this file I have included the agreements covering the settlements with the Case Company, and the White Company for past infringement, heretofore offered as Plaintiff's Exhibits GG and FF; and, also, the letter of Mr. Cooper to me dated December 24, 1929, heretofore offered as Plaintiff's Exhibit HH.

The Master: Do you want to examine Mr. Michael on this? (Handing Plaintiff's Exhibit RR to Mr. Farley.)

Mr. Farley: Yes, I do, your Honor, please.

Cross Examination by Mr. Farley.

Q. Mr. Michael, I notice that the fifth paragraph of the agreement with the J. I. Case Company says:

> "It is further agreed that in the event of litigation" —you have already read this paragraph—"neither party hereto"—I have skipped some—"shall in any wise use this agreement as affecting the measure of damages for such infringement."

Now, the agreement with the Case Company referred to a license for future; that agreement referred to only future use of the machines. That is correct, isn't it? A. The longer of the two agreements refers only to the future.

Q. Only to the future. But, the fifth paragraph does contain a provision to the effect that neither party should

use the agreement in any wise as affecting the measure of damages for infringement of the Gordon patent prior to the date of the **(1817)** agreement. That is true, isn't it? A. That is right.

Q. And, the same provision is contained in identically the same language in the fifth paragraph of the White agreement. That is true, also? A. I think so.

Q. Yes. And the White agreement in the ninth paragraph recites:

> "It is mutually understood and agreed by and between the parties that in the event said patent 1,542,803 shall be sold or otherwise disposed of to any person, firm or corporation, for the benefit or in consideration of money furnished by any group of automotive manufacturers, White shall be given an opportunity to join this said group of automotive manufacturers, and to apply any monies paid to Gordon under the terms of this agreement towards the purchase price of said patent; it being understood, however, that in the event White shall elect to so join with such group of manufacturers and have said monies applied to said purchase price, then the license and release herein granted shall be void and of no effect."

Both of those license contracts contained that provision, did they not? A. I think so.

Q. Now, what was the release referred to in this last paragraph? "The license and release herein granted"; didn't that refer to the— A. (Interposing): The release of the machines for future use.

Q. For future use. And, I suppose it would be your testimony that the—or let me ask this; referring to the White **(1818)** agreement, it is dated the 6th day of February, is it not, 1930? A. Yes. I think the correspondence there will explain the discrepancy in dates in those two contracts.

Q. And, the exhibit which you put in, Exhibit GG, a release to the White Company, is dated the 21st day of December, 1929? A. Yes. And, if you will refer to the other agreement you will see that when it was sent it also referred to that same date (indicating), here in Section 1st. In other words, the release was to take effect as of a certain date, which, of course, would have to co-

incide with the date of the agreement for the release of the past.

Q. You make a distinction, then, between the release as to the future and the so-called release as to the past concerning which you had Mr. Gordon to testify that three-quarters of a cent a cam was paid? A. Well, one is the release of the machines for future use; the other is a release for the past.

Q. Well now, at the time the White agreement was signed on the 6th day of February, 1930, the release for past infringement, as exemplified by your Exhibit GG, was in effect, was it not? A. No.

Q. It took effect as of that date, though? A. You can see from the correspondence they were both signed on the same date.

Q. They were both signed on the same date. So, it was at that date, then, at the date you made that agreement, there was a complete settlement in effect between the White Company and the **(1819)** Gordon Form Lathe Company both as to past and to future, was there not? A. When both of those agreements had been signed and delivered, there was a complete settlement.

Q. Yes. And then, as I understood your testimony, your interpretation of the fifth paragraph of this agreement was that it referred only to the use of the agreement in so far as the two parties to the agreement were concerned? A. Well, I am not—I don't think I made an interpretation, Mr. Farley; I think it speaks for itself.

Q. So do I. It speaks very loudly for itself. But, the date this agreement was signed you had fully and entirely released the White Company, not only as to past, but as to future infringement; that is true, isn't it? A. When they were both signed.

Q. Yes, when they were both signed. You just said on the same day, on the 6th of February. A. As far as I know, they were both signed on the same day.

Q. Yes. A. However, they were submitted in the form of two separate and distinct agreements.

Q. Very well. A. And the company had previously elected only to take one of them.

Q. And, at that time you had no claim, when both of these agreements were signed, released both for past and future infringement, you had no further claim against

the White Company? A. When they were drawn we had a claim for both.

(1820) Q. Answer the question, please. I said at the time they were signed you had no claim either for past or future infringement? A. Well, the agreement was drawn up.

Q. Answer the question. A. Separate agreements.

Q. Can't you answer the question yes or no? A. I will answer it my own way. They were submitted separately; one for future and one for past, and the company given its option.

Mr. Farley: Now, if your Honor please—

A. (Continuing): —to take either or both.

Mr. Farley: If your Honor please, I am going to ask—

A. (Interposing): And, naturally, the language of the fifth section would be stated in that way so if they only took the one for the future they wouldn't be bound by anything said in that one.

The Master: It is true—

Mr. Farley (Interposing): Just a minute, your Honor please, I move to strike that answer as not responsive. I think I am entitled to a direct answer to that question. I am going to ask if the Court won't kindly direct the witness to answer the question.

The Master: I will strike the answer and ask you to answer the question directly.

The Witness: What is the question?

(Last question read by the reporter.)

Q. (By Mr. Farley): The answer is "yes," isn't it? A. That is correct.

(1821) Q. So, unless there was a question of future litigation against some third party, this fifth paragraph is meaningless, is it not? Will you answer that directly? A. Not to me it isn't, nor was it to the White Company or its counsel.

Q. I move that the "nor was it to the White Company or its counsel," be stricken. The witness can't know what was in the minds of the White Company nor its counsel.

The Master: I think I will let it stand.

Q. I understand, Mr. Michael, that you have produced here all of the correspondence had between your firm and all of the people with whom you settled concerning the Gordon patent? A. I didn't state that. I said I produced the correspondence between the White Company and ourselves.

Q. These various contracts with the Case Company, and the White Company, were attached to and made a part of the general settlement made with the General Motors Company, isn't that true? A. Correct.

Q. And, they were made a part of that agreement, were they not, with knowledge on behalf of plaintiff, or its counsel, that the monies paid by the Case, the White, and the Nash, and the Chrysler Corporation, would be taken into consideration and an adjustment made by the General Motors and those various companies, isn't that true? A. That is correct.

Q. Now, you produced here testimony tending to show that the White Company has paid the sum of six thousand four hundred odd dollars on the basis of three-quarters of a cent a cam for past, **(1822)** and some $2,000, I think it was, for future use of the Walcott machines. That is true, too, isn't it? A. That is correct.

Q. And you knew at the time you produced that, that there would be, or perhaps should be, some adjustment to the White Company under the general contract with the General Motors Corporation? A. I personally knew nothing about what General Motors did with its various nominees.

Q. Wasn't it your intention, when you produced that contract, Mr. Michael, on the stand, that the Court would get the impression that the sum of $6400 was the full sum paid by the White Company? A. Oh, I think that was the intention and it was the fact.

Q. Whose idea was it, Mr. Michael, that the General Motors' agreement should contain, in paragraph 1 thereof, this language: "Releases and agrees to release General Motors Corporation, a corporation of Delaware, its subsidiaries and nominees (with the specific and sole exception of the Ford Motor Company)"? A. What is your question?

Q. Whose idea was it that the language, "With the specific and sole exception of the Ford Motor Company,"

be included in that contract, if you know? A. Whose idea it was?

Q. Yes. A. Well, the contract was drawn by the General Motors Corporation. We had been given to understand in these negotiations that they were representing the entire industry except Ford, so naturally we insisted that Ford be excepted from this agreement.

(1823) Q. Then, it was placed in there on the insistence of counsel for the plaintiffs? A. Yes. It was placed there very wisely by the General Motors Corporation.

Q. Prior to the telegram of November 18, 1930, you as counsel for the plaintiffs extended no invitation to the Ford Motor Company to enter into the negotiations you were entering into with the General Motors? A. We didn't extend any invitation to anyone to enter into those negotiations.

Q. Answer my question, please. A. We didn't extend any invitation to Ford or anyone else to enter into those negotiations.

Q. You haven't in this file, have you, any correspondence that relates to the settlement you made with the Walcott Company, have you? A. I am not aware of any settlement we made with the Walcott Company.

Q. Were you of counsel for plaintiffs when the decree, Plaintiff's Exhibit 5, was entered in the Walcott case in this court by Judge Simons? A. I was one of plaintiff's counsel.

Q. Was that decree prepared by counsel for the plaintiffs and submitted to the Court for signature? A. It was, after investigation.

Q. And the plaintiff, through its counsel, consented to the entry of that decree in the form in which it is reproduced in Volume III of the record, is that true? A. That is true.

(1824) Q. Were you counsel throughout the trial of the Walcott case, Mr. Michael? A. I was one of counsel.

Q. Did you at any time during the Walcott case consider what your claim for lawful damages, or your claim for damages under the law against the Walcott Company, might be? A. Not that I know of. It usually takes a long time in these patent matters to determine what damages or what profits there may be.

* * * * *

Q. (By Mr. Farley): Did you prepare any formal bill of costs in the Walcott case? A. I don't think there was any formal bill of costs filed in the case, but we checked our costs quite carefully at the time, and I think they ran quite in excess of that figure of $4,000.

Q. Do you know whether or not, Mr. Michael, after the general agreement was made with the General Motors, that General Motors under the terms of that agreement issued licenses to other members of the Automobile Chamber of Commerce including the **(1825)** White Company and the Case Company? A. I know nothing about that, or knew nothing about it until, I think, Mr. Dahl or somebody pointed out that the license had been issued to them, to the White Company.

Mr. Farley: I think that is all.

(Witness excused.)

* * * * *

(1826) NORMAN R. SCOVILL was thereupon recalled as a witness on behalf of the Defendant herein, and having been previously sworn, testified further as follows:

RE-DIRECT EXAMINATION by Mr. Farley.

Q. You are the same Mr. Scovill who testified here before? A. Yes, sir.

Q. You are employed by the Ford Company, and as you testified before, have charge of all forms of the company? A. Correct.

Q. As a part of your duties, you testified here before you not only prepare the forms, but you give the orders, and you have a set of instructions concerning the length of time through which, or to which, various forms shall be preserved, is that right? A. Yes, sir.

Q. What are your orders, and what is the practice with respect to cost summary cards at the Ford Company? A. That is in the holding of records?

Q. Yes. **(1827)** A. The order is that we do not destroy any records pertaining to cost.

Q. That would apply, then, to the cost summary cards— A. (Interrupting): Yes, sir.

Q. (Continuing): —of the— A. (Interrupting): 3566.

Q. (Continuing): —of the type shown in these exhibits, D, E, E-1 and through F to F-13, is that correct? A. That is correct.

Q. Now, are you familiar with the type of purchase order used by the Ford Company in the years 1922 and 1924? A. Yes, sir.

Q. Can you produce one of those forms? A. I have one right here in my hand (producing document).

Mr. Farley: I will ask that this set of forms be marked as Defendant's Exhibit 296.

(The set of forms above-referred to was thereupon marked Defendant's Exhibit 296 by the reporter.)

Mr. Michael: How about 295?

Mr. Farley: I will straighten that out right now. I will ask that the letter dated February 1, 1939, addressed to me or, rather, addressed to my firm, and signed by Mr. Pioch, be marked Exhibit 295.

(The document above-referred to was thereupon marked Defendant's Exhibit 295 by the reporter.)

Q. (By Mr. Farley, continuing): Now, I notice that this set of forms as produced by you consists of a number of sheets. Will you explain to the Court the way in which the purchase (1828) orders are used, if you know? A. The original copy is sent to the vendor.

Q. That is the first sheet? A. That is the first sheet. Attached to the first sheet original is an acknowledgment of order, which is signed by the vendor and returned to the company acknowledging the order, and the conditions thereon.

The No. 2 copy is the Ford Motor Company copy, which also has the conditions, same conditions, as printed on the original, and this copy is kept in file and also ties up with the signed acknowledgment.

The third copy is used as a follow-up copy by the production department.

The fourth copy is, also, a numerical file copy, which is filed by the purchasing department.

The fifth copy is directed to the cost accounting department.

The sixth copy directed to the receiving department, notice of shipment.

The seventh copy is not always used unless purchases are made through the Walkerville plant in Canada.

The eighth copy is the invoice record, which record all invoices are applied against.

Q. Now, I notice that the first copy contains certain clauses and conditions; whereas, some of the other copies are blank with respect to the reproduction thereon of the conditions as printed on the first copy? A. Correct.

Mr. Farley: I will offer the set of forms as Defendant's **(1829)** Exhibit 296.

Mr. Spohn: May I ask counsel what the purpose of the offer is?

Mr. Farley: Yes; to establish the patent guarantee clause and to prove by a later witness that the orders sent to the Motch and Merryweather Company ordering the Gordon machine and the Walcott machine, the original form, and the first copy, is a copy that is no longer in the possession of the Ford Motor Company.

Mr. Spohn: Your Honor please, we object to the offer as not material and relevant to anything we have in this lawsuit.

The Master: Where is the first copy of the purchase order?

Mr. Farley: The first copy of the purchase order goes to and was sent to, in each instant, to the supplier. In connection with the first copy of the orders of the Motch and Merryweather Company, I was trying to find the place in the record, if there is any question to be raised concerning this being secondary evidence. But, if my memory serves me right, Mr. Gordon somewheres, in either the proceedings before Judge Tuttle, or here, was asked the question as to whether or not he had not procured from the Motch and Merryweather Company their entire file relating to the sale or attempted sale of the Gordon machine to the Ford Company. My recollection is that he said that he had, and that file was in Milwaukee. I wonder if we might ask Mr. Gordon now whether you still have that file, Mr. Gordon?

(1830) Mr. Gordon: I believe we still have it.

Mr. Farley: Will you produce from that file the original purchase order received by the Motch and Merryweather Company from the Ford Company ordering the Gordon lathe?

Mr. Spohn: We will produce anything we have, your Honor. If the file is in Milwaukee we will have to go to the file to get it. We can't produce it now. But, we do want to object to its relevancy and materiality even upon its own production.

The Master: Well, I haven't thought through all the legal implications of the argument that Mr. Farley has advanced in connection with the introduction of these exhibits. I think I will permit them to go into evidence; that is, when the original exhibit or original purchase order is produced, and leave it for legal argument as to whether there is any validity to his contention there. However, I think this being secondary evidence, and Mr. Gordon having agreed to produce the original primary evidence, if it is in the file, we should withhold the admission of this exhibit at the present time.

Mr. Farley: If your Honor please, it is my purpose to offer this, too, in connection with the order given to the Walcott Company. The only copies we have in our files of these two orders are copies that are blank, which do not contain the patent guarantee clause. You may recall when Mr. Broughton was here, he testified that he could find nothing in his files or the Walcott Company's files, as I recall it, concerning the matters before us here. I don't know; **(1831)** I don't recall offhand whether his testimony went to the original purchase order of the Ford Company, as he was examined here chiefly on the subject of this order for shapers.

I do recall, however, that I requested Mr. Broughton to furnish me with the original purchase order and he advised me that he was unable to find it. I can recall him as a witness for that purpose.

The Master: Are you speaking of the shapers now?

Mr. Farley: No, sir. I am speaking of the orders for the Walcott lathes that were marked here in evidence Exhibits 217, 218, 219 and 220. They are duplicate originals of a set of purchasing orders of which

the one you have in your hand is a copy. Here, Exhibit 221 and Exhibit 222 are duplicate originals of the six machines that were ordered in 1929, and the duplicate original of the order to the Motch and Merryweather Machinery Company ordering the Gordon machine, which is dated August 2, 1922, is reproduced in Volume III of the book of exhibits at page 1043 as Defendant's Exhibit 56.

Mr. Spohn: Mr. Farley, have you got Defendant's Exhibit 54 with you? Isn't that what you are talking about?

Mr. Farley: No. That is a machinery requisition. Exhibit 56 is the one I have reference to. This has the reporter's stamp on it.

Mr. Michael: Isn't this what you want us to produce?

Mr. Farley: Yes. That is the original of that. Of course, if counsel will agree that the Gordon Form Lathe Company received from the Ford Motor Company a regular purchase **(1832)** order containing the patent guarantee which we are talking about, I think there will be no necessity for the production of the original.

Mr. Spohn: I think we better look it up, Mr. Farley. We will produce what we have.

The Master: With regard to the Walcott Company—

Mr. Farley: (Interposing): I notice that that was probably, I might say, perhaps an inadvertency in the trial before Judge Tuttle. There was a reference made by, I am quite sure, by both Mr. Weibel and Mr. Crawford in their testimony to the patent guarantee and the purchase orders, but the purchase order, or the exact clause of the patent guarantee, was not placed in the record except by the reproduction of it in one of those letters forming a part of Exhibit 72 which I just handed to you this morning.

The Master: Yes. I noticed statements to the effect there was such a guarantee clause and there was no denial, apparently, in the replies of the Walcott Company.

Do you have an objection on the basis of the best evidence rule to the reception of this exhibit in so far

as it applies to the Walcott Company, and the contract of the Ford Motor Company with Walcott Company on the purchase of the machine?

Mr. Michael: In so far as it applies to the Walcott Company?

The Master: Yes.

Mr. Michael: No, I haven't any objection.

Mr. Spohn: That is with reference to the best evidence **(1833)** rule. We still have the objection as to the relevancy and materiality.

The Master: You will admit there was such a guarantee clause?

Mr. Spohn: If the witness testified there was such a thing on it.

The Master: The witness hasn't testified directly as to the Walcott Company. He said all purchase orders had this clause in them at that time.

Mr. Farley: I might state there; perhaps we might shorten and save a little time. Mr. Scovill, I don't think, would be in a position to state unqualifiedly that the orders which were sent to the Motch and Merryweather, and the Walcott Company, were made on this form. His knowledge, I think, would be limited to the fact that this is a form of the company and—as far as you are concerned, would you say, Mr. Scovill, all purchase orders which go from the company are sent out on such forms?

The Witness: Yes, sir.

The Master: Do you know whether that was so in the period, say, from 1923 on to the present date?

The Witness: Yes, sir.

Mr. Farley: I might state there, your Honor please, it was my purpose to recall Mr. Weibel this afternoon for a few minutes as he was in charge of the particular department, and have him state that such orders were always used and—

The Master: I think Mr. Weibel did so state in his testimony, did he not?

(1834) Mr. Farley: I think so. I think it really is not necessary in view of the facts to take any more of Mr. Weibel's time in the matter, although I am perfectly willing to have him do so and have him so testify.

If counsel will stipulate or agree to my dictating a stipulation that if Mr. Weibel were called he would testify that the Form, of which a copy is put in evidence as Exhibit 296, was regularly employed in his department, and he knows that the orders to the Motch and Merryweather Machinery Company, ordering a Gordon machine; also, to the orders of the Walcott Company, ordering Walcott lathes, were sent out on a purchase order of the type shown in Exhibit 296, containing the patent guarantee clause as one of the conditions—

Mr. Spohn: Of course, if your Honor please, we have no objection to this exhibit on the ground of it being secondary evidence. The fact is, however, this witness doesn't know the facts as they were back in 1922. Isn't that so?

A. Well, I feel my statement is quite sure because of the fact these particular orders have been going through my hands for the past 15 years, and I know, in disposing of a lot of records in 1931, that this particular kind of order was destroyed; that is, for years back there wasn't any set time, the number of years back, for holding forms as there is today. And, I recall that the conditions were identical with the conditions that are on that order.

Mr. Spohn: Has there been any change in this form in the last 15 years?

A. Any change?

(1835) Mr. Spohn: Yes, in Exhibit 296.

A. Yes, there have been a few changes.

Q. (By Mr. Farley, continuing): How recently, or what date, Mr. Scovill? A. Well, to be exact, knowing that has always been an important factor on that form, about—well, a new change would be when the processing tax come into the picture. We, of course, put in an exemption on certain forms where we had no tax to pay. That, I think, would be about three or four years ago, and the only other change that I know on that is a slight change in the freight conditions. Other than that, I don't know of any changes. I can't remember of any changes going through.

Q. Is it your recollection that the patent clause has been retained without change throughout all of the years

that those purchase orders have been used by the company? A. Of the 15 years that I have been right close to that job, there have been no changes to the patent clause.

* * * * *

(1842) (Witness excused.)

Mr. Farley: I would like now, if your Honor please, at this time to offer Exhibit 295 in evidence with the stipulation concerning which I discussed the matter last night with Mr. Spohn, that this is a letter prepared by Mr. Pioch from the same data and in the same manner as he prepared Exhibit No. 264.

This is a computation of the same type, and if Mr. Pioch were produced as a witness he would testify that the material on Exhibit 295 was compiled by the same sort of computation as made by him, and about which he testified concerning Exhibit 264.

Mr. Spohn: Mr. Farley, the purpose of the offer of 295 is what? To show the use of the shaper on the tractor F-446?

Mr. Farley: Well, for the purpose of computation in the **(1843)** standard of comparison of the shaper to Walcott machines.

Mr. Spohn: But, it relates to the use of the shaper on tractor shafts.

Mr. Farley: On tractor shafts, yes.

Mr. Spohn: Your Honor please, the stipulation with respect to what the witness would testify, we expect he would testify in accordance with the terms of this letter but we, however, object to the receipt of the letter on the grounds there is no relevancy and materiality here in respect to the use of the shaper as a standard of comparison on tractor F-446.

The Master: Well, that is all based on the question of what is the proper standard of comparison, and I am not deciding that now, so I will admit the exhibit in evidence. The speed of operation on the machine in terms of the time sliding back and forth is the same, is it not?

Mr. Farley: That is right.

The Master: All this brings out is how that will affect the cutting speed of the tool, and—

Mr. Farley: (Interposing): And, also it gives the relative time for the cam to complete one revolution due to the greater perimeter or circumference, if it could be called that, of the model F cam, as compared with the model T cam.

The Master: The surface speed of the tool on the model T, in accordance with Mr. Pioch's computation, is 34 feet per minute average, and the surface speed on the tractor is 38 feet per minute, and there is a pencil notation, I believe, under Mr. Pioch's initials, "This speed is O.K.; not too fast."

Mr. Farley: That is right.

(1844) The Master: In view of Mr. Brush's testimony that the limiting factor in the use of the shaper is not the speed of the tool at all, or the speed of the cutting, how is that particular point important? In other words, with the computation Mr. Pioch has made for the tractor here, the acceleration and deceleration or loss in motion, of the machine, would be more rapid than with the shaper as applied to the machining of the model T cams, because the tractor cam shaft being longer, the longer stroke would be necessary.

Mr. Farley: Why, I don't think that the slight difference would be of any particular importance, but even on that, remembering Mr. Brush's testimony, and that particularly with respect to exhibits, I think, 268 and 269, the drawing Oberhoffen's plan for designing the shaper to cut the model F shafts, you will recall there the speed of the two strokes was to be made uniform. And, as far as the reversal is concerned, the speed of reversal in the machine was the limiting factor where you reversed the table for return stroke at twice the speed of the cutting stroke.

The Master: Well, this computation here is based on the same type of movement as you had on a model T shaper. It says, "Cutting stroke, 240 degrees; return stroke, 120 degrees." Then, if in the original model T shaper the maximum speed had been built into the machine from the standpoint of the maximum speed possible, because of the strain on the machine, because of the reversal of motion, then it would be above the maximum practical speed with the **(1845)** same type of machine for the tractor.

Mr. Farley: If your Honor please, that is a matter I would prefer to handle, if I may, by the testimony of Mr. Oberhoffen on the subject.

The Master: All right. I just mentioned it.

Mr. Farley: The fact of the matter is, I asked Mr. Pioch over the telephone yesterday morning to prepare a computation for the model T, and tractor in the same manner as he prepared it for the model A. As far as we were concerned, we were not particularly interested in this cutting speed in feet per minute, but the computation on this Exhibit 295 was made to include all of the figures which Mr. Pioch had included in Exhibit 264.

* * * * *

(1854) HAROLD M. WOEHRLE was thereupon recalled as a witness on behalf of the Defendant herein, and having been previously duly sworn, testified further as follows:

RE-DIRECT EXAMINATION by Mr. Farley.

* * * * *

(1855) Q. You have been present, Mr. Woehrle, during the taking of all of the testimony here since January 15 of this year? A. I have with the exception of yesterday.

Q. Now, have you made any re-computations based on the facts as established by the testimony of the various witnesses? A. I have.

Q. As you appeared here in March mainly for the purpose of cross examination, and we now are on the defendant's case, I wish you would outline to the Court, first, the instructions under which you started this particular work, and the methods you employed generally in order to ascertain the facts upon which your various computations have been based? A. Well, I can first make the statement—when I refer to "we," I mean Mr. Russell and myself, because Mr. Russell has also been working with me, at least being my adviser all the way through. As I recall it, we were called over to Mr. Farley's office on October 31, 1937, and were, both Mr. Russell and myself, were called over, and we were there informed of the general outline of the case and it had **(1856)** progressed so far, and were shown a

list of questions to be answered, a list of questions dated October 29, prepared by the Master, directing us to procure certain additional information.

Mr. Farley gave us the names of various individuals whom he had already contacted, principally Mr. Shawkey and Mr. Hovis. The next morning, November 1st I believe it was, Mr. Russell and I went out to see Mr. Hovis, talked over to see what he had previously—what ground he had previously covered.

Having obtained that information, Mr. Russell returned to the office and I called Mr. Shawkey. Mr. Shawkey turned over to me at our first meeting Spencer Libby's notebook, marked Exhibit—a copy of which is marked Exhibit 13, attached to our further statement of account, and Mr. Marentette's time study. I think I will call them operation sheets in order to make it understandable. I will define an operation sheet later on.

Q. Just at that point, Mr. Woehrle, were you given any instructions by me as to the nature of the report which you should prepare, or how you should go about preparing it? A. No. As I remember, you showed me your exhibit which you had already filed, Exhibit A, and I looked that over, but didn't accept any of the facts that you had placed in there, and was told by you to go out and start afresh. In other words, start right from scratch.

Therefore, I accepted nothing in that first exhibit, and started from the ground up, so to speak. As I remember (1857) it, you told me what you were after were the facts, regardless of what they were, and all you were interested in was getting the true picture of the situation as you knew it existed, but had so far been unable to ferret out. And, knowing the organization out there as I do, you figured I could probably contact the persons from whom I could, perhaps, obtain the correct information. So, with that thought in mind, I disregarded your first statement of account entirely. In fact, you will see no similarity between your statement and the later statement which we filed under Exhibit C. There are few facts contained in the original report which we used, and the ones we did use, we verified, personally, or through records.

Q. Well, can you proceed to outline, then, the procedure followed by you, taking the matter up where you left out with your obtaining from Mr. Shawkey the Libby

notebook and the Marentette time study or operation sheet; the Marentette operation sheet being the one that was introduced and attached to your statement of account, as Exhibit 14. That is correct, isn't it? A. That is right.

Q. And, the Libby notebook attached to your statement of account, Exhibit C, and marked Exhibit 13? A. That is right. That Exhibit 13 is a copy, a typed copy, taken from the information contained in Mr. Libby's notebook.

With those two operation studies, I prepared a tabulation, and it took me several days before I had all the information I needed on those.

Then, Mr. Shawkey conducted me around the plant for three **(1858)** or four days, acquainting me with certain individuals in the plant. Thereafter I went on my own, so to speak, and that is when I had most of these interviews with the men mentioned in the record so far.

Q. Now, what other records of the Ford Company did you use in addition to Exhibits 13 and 14? A. Are you referring now to my first statement of account? You are, I assume?

Q. Yes. A. Before we have any amendments, any additional records?

Q. Yes. A. Besides these two Exhibits, 13 and 14, there were numerous cost summary cards, and minute cost summaries, production labor schedules, and overhead percentage schedules; various other data such as motor numbers, and service sales' records used in the compilation of production figures.

Q. Now, the cost summary cards you refer to, where were they obtained by you? A. I obtained some of them from Mr. Hovis, who had previously taken them from the files at Highland Park. I obtained the remainder of them by going over to Highland Park myself and contacting the custodian, Mr. Ray Lively.

Q. And, the cost summary cards which you employed in your computations, are the ones which have been introduced in evidence as Exhibits D, E, E-1 and F to F-13, is that correct? A. I believe so, yes. Other records which were used in our computations were the machinery valuation records prepared in the cost department, accounting department, about which **(1859)** Mr. Missal testified just

the other day; similar records prepared by the engineering department called "Inventory of Machine Tools," and I believe those are Exhibits Y-1 to 24 in the case.

Q. That is right. The valuation records are Y-25—
A. (Interposing): Y-25 to 48.

Q. That is right. A. I believe those are for the Melling cam lathe. Then, of course, we have similar records for the Ford cam shapers and the Pioch cam mills, and the Reed Prentice lathe, which was used in the construction of the Westinghouse adapted lathe.

The Master: With regard to the Ford shapers and the Westinghouse machines, what information and instructions did you have from Mr. Farley as to the use of standards of comparison in connection with patent accounts?

A. Well, naturally, being an accountant, I relied on Mr. Farley's suggestions as to the standards of comparison. He advised that the Westinghouse would be a proper standard, and I used that, assuming he would establish the standard in his argument.

On the shaper, our first occasion we had to talk about that was after I had interviewed Mr. Pioch on November 8th. Speaking about that, I would like to refer to the record where I made that reference before, on page 174, Mr. Spohn asked the question—

The Master: This is page 174 of what proceedings?

A. Page 174 of the proceedings of March 17. Mr. Spohn asked this question: "Q. And from whom did you obtain the information **(1860)** that the model A would have been machined on the Ford cam shaper?" And, I answered: "Mr. Pioch."

Mr. Farley: I think the record was corrected there to change "would" to "could." It is on my copy.

A. Then, on page 175 the question is:

"Q. Do you have any notes as to your conversation with him?" And, my answer is, or was, "Yes." Thereupon, Mr. Spohn withdrew the question.

Then, on page 190, Mr. Farley asked this question, middle of the page:

"Q. May I see your statement from your interview with Mr. Pioch?"

I answered, "Offhand, I am not familiar where that is filed."

I wish to produce that, at least get into the record my interview with Mr. Pioch.

(1861) A. (Continuing): I have before me my work sheet which is dated November 8, 1937, which is just eight days after I started on the case, and as a result of my conversation with Mr. Pioch I wrote this:

> "Mr. Pioch stated that in his opinion the old cam shaper in use prior to 1925 could have been adapted for use in making Model A cam shafts without requiring an additional operation or an additional time for the shaping operation. He further advised that he could make a design to substantiate his theory.
>
> "With that information at hand I went to Mr. Farley and asked him if that would be a proper standard of comparison, and, I believe, after a short while, you said go ahead and use it. So that is where I got the shaper idea."

Q. (By Mr. Farley): And at the first talk you had with Mr. Pioch, he did not have any drawings of anything of that kind to submit to you at that time showing his conception of the shaper that he then mentioned to you? A. He did not.

Q. And are you aware of the fact that I then got in touch with Mr. Pioch and told him to make up the necessary drawings to show the ideas that he had then in mind? A. I was aware of it, yes.

Q. Now, will you proceed? A. That takes care of our standard of comparison for the A shaft, on the shaper, and, since the T shaft had already been used—I mean the shaper had been used—on the T shaft, that was **(1862)** the natural comparison to use, and the Westinghouse there was the additional standard for the A, Model A shaft, and, I took Mr. Farley's word for that without any re-checking with anyone.

Q. Now, do you recall my stating to you before you made any computations and before Mr. Pioch made any drawings that the shapers could, in my opinion, be used without any modification but a slight change in the shaft?

A. Well, that is hard to say. I know we had that brought up in our conversations. I don't remember whether it was before or after this date.

* * * * *

(1878) Q. (By Mr. Farley, continuing): Now, you have produced some additional computations. I wonder if there is any further explanation you had to make about anything before starting in to discuss the new computations you have here? A. No, I don't remember anything now.

Q. Well, now, let's see.

Mr. Farley: I will ask that be marked Exhibit C'.

The Master: Well, you could mark it Exhibit D. This discussion is off the record.

(There was a discussion off the record.)

The Master: Well, suppose you mark that Exhibit C'.

(Exhibit No. C' was then marked by the reporter.)

A. Well, these are meant to be substitute pages, and they are marked on the bottom of the sheet.

Q. (By Mr. Farley): Now, then, I notice your first page of this exhibit is marked sheet 8? A. That is right.

Q. Now, do I understand that sheet 1, sheet 2—the first 7 sheets of Exhibit C, as originally filed are to remain unchanged? **(1879)** A. That is right. Because that pertains primarily to the computations on the Model T-410 shaft, and I did not change that computation.

Q. That computation being based on your records of the Spencer-Libby time study obtained from the Spencer-Libby notebook and also Exhibit 14? A. Yes.

Q. Exhibits 13 and 14? A. Exhibits 13 and 14, yes, which are attached to Exhibits, attached to Exhibit C.

Q. Well, now, will you take up your Exhibit C' and make whatever explanations of it you think necessary? A. By referring to page 8, you will notice that the only figures in the body of the schedule which are changed are for direct labor and the amounts changed from $105,531.36 for direct labor on the cam shaper, to $86,921.15. That is on the C' schedule. And that the 120,000 odd dollars on the direct labor for the Melling cam lathes is changed to $101, odd, on the new exhibit, C'.

Q. $101,000, isn't it? A. $101,000, odd dollars, that is right.

Q. The other figures for depreciation, I note, remain unchanged? A. Depreciation and maintenance repairs remain unchanged. By changing the direct labor, you will notice that the loss has been reduced from $31,045.25 to $30,697.91; and, correspondingly, cost per shaft has been reduced for the cam shaper comparison from .0385 to .0341, and, on the Melling cam lathe, the cost has been reduced from .0458 to .0413.

(1880) Q. Now, just a minute on that. What sheet are you referring to? A. Page 8.

Mr. Farley: Off the record.

(There was a discussion off the record.)

A. I might explain the reason for the differences now. The direct labor difference on the Melling cam lathes arises from the fact that we have used the so-called Autostroy operation sheet, which is a Ford Motor Company record, by the way, that is, Exhibit 18, attached to this Exhibit C'.

Mr. Farley: Now, I was wondering, before you go into your further explanation of that, if we might have a few minutes' recess.

The Master: All right.

(Short recess taken.)

The Master: All right, you may proceed, if you are ready.

Q. (By Mr. Farley, continuing): Will you proceed now, Mr. Woehrle? A. I believe we got down to the point for the reason of the change that is on this Autostroy operation sheet, Exhibit 18. I would like to call your attention to operation 12, straightened by hand press, 100 per hour. Now, that is one man operating one hand press, and 100 an hour into 60 minutes, gives you .60 minutes for the straightening operation. That operation 13, turn cam on Melling cam lathe, that is 30 an hour for one man operating one machine. He operated two, and, I understand he always did. That would be 60 an hour. 60 an hour into 60 minutes gives you one minute for the man time; and that total of 1.60 minutes, if you will refer to page 9 of the Exhibit C' to **(1881)** the third column from the right, in the heading it says, hours required for two operations, produc-

tion multiplied, 1.60 minutes, or by .0266667 hours. That is nothing more or less than converting the minutes into hours, because we have got the hourly direct labor rates.

Now, if you will convert the production in column one —production of the Model A shafts—into hours at .02 and so forth hours, you will get the result for column number five.

That will give you the total number of hours which were consumed in these two operations, straightening and turning on the Melling cam lathe.

Q. Now, in connection with that method of calculation, do you recall my questions of Mr. Moise on cross examination, where, at least, it was my understanding of his answer was, that an accountant would not take two operations that way and multiply them by the production. As I understood his criticism, it was based on the—or his objection to that method of figuring was that instead of multiplying the production as you had done it here, it should be done by multiplying first by the one minute and then by the .60 minutes and then adding the two figures. A. Well, that would give you the same result.

I don't know what Mr. Moise had in mind when he testified. From my standpoint I can't see any criticism of adding a straightening and a turning operation together, because what I am after is the total time it takes to put the shaft through these two operations. Well, it takes 1.60 minutes. Well, now, a laborer, a man has to be on the job all the time while that **(1882)** is in process. These are man minutes. In other words, man minutes per shaft.

Now, it doesn't make any difference whether you first compute it on .60 minutes and the one minute, and add the two together. There is no mathematical confusion there. I can't understand why that isn't the correct method to use.

Q. It would make no difference in the net result, obviously. A. No, it doesn't make any difference.

Here is one thing that maybe Mr. Moise had in mind: He might have had in mind that the base rate of, base rate of pay of these operators, the operating of the straightening and the turning on the Melling cam lathe. However, that isn't the case. The men in this department were on the same hourly rate. In fact, they could be switched from one operation to the other. So, with that information at hand,

there is no criticism, as far as I can see, in adding the two together, and then multiply by the average labor rate.

Q. All right, now, proceed. A. Well, take the column 5 and multiply each figure there in the column opposite each month by the average direct labor rate in the department 410 for that corresponding month.

Q. As contained in column No. 6? A. Column No. 6 are the direct labor rates.

Q. Yes. A. Averages.

Q. Yes. A. Month by month for November, 1927, to February.

Q. And multiply—and the multiplication of the figures in column **(1883)** 5 by the figures in column 6, then, that would give you the direct labor cost of the two operations as contained in the last column at the right-hand side of the sheet? A. That is right. And the total of that cost for the two operations is $101,108.05.

Q. Now, on that sheet, gives you, in that column, then, the last column, the direct labor cost on the Melling cam lathes, and included the straightening operation for the production of Model A-6250 shafts from the period from November 1, 1927 to February 3, 1931? A. That is right. And that is carried forward to the summary on page 8.

Q. Well, now, as I understand your computations and your schedule, no change—has any change been made as to the other figures on the page? A. Yes.

Q. What? A. The figure in column 3, the figures in column 3, the heading, hours required for two operations production multiplied by 1.3755 minutes, or by .022925 hours, that column has been changed, due to the fact that we have found, or have used more definite facts than we had in the first computation.

I would like to refer to page 23, where we have the explanation, description of means and methods used in computing schedule II—that is, Roman numeral two.

I have already covered the Melling computation there. On page 24—it reads as follows:

> "In comparing the operations required if Ford cam shapers **(1884)** had been used, it appears that as no straightening operation was required for shaping the Model T-410 cam shaft, none would be required for the A-6250 cam shaft. Hence, no time for straightening

has been included in computing the costs of shaping Model A cam shafts.

"The time of 1.3755 minutes for shaping cams on Ford cam shapers has been determined from the computations by Mr. William F. Pioch, set forth in Defendant's Exhibit 264, which shows that one rotation of the Model T cam shaft in the Ford cam shaper took 25.3 seconds. Whereas, the Model A cam shaft would have taken 29 seconds. The proportionate increase from 25.3 to 29 applied to the 1.20 minutes for shaping Model T cam shafts for Exhibit 13. And, by the way, that is attached to Exhibit C—results in the amount of 1.3755 minutes for shaping Model A cam shafts."

In other words, I have used the cycle of the turning of the cam shaft, which is the perimeter method in setting down the production of Model T shafts from 1.20 minutes, which is 25 shafts per machine. I have stepped the time up, and the number of pieces down.

The time goes up to 1.3755, and the number of pieces down to, I think it is about 21, or 22, roughly.

Are there any questions on that?

I think that is a method similar to the one that Mr. Moise used in his area method or periphery method, except, that I believe, he made an adjustment for handling time, which I have not.

(1885) Do you care for me to explain that handling time in that respect?

Q. Yes. On that question of handling time, did you make any inquiries concerning how that might affect the operation, in view of the weight of the two shafts, the Model A shaft being a heavier shaft than the Model T? A. Well, I requested the time study department to give me an estimate on the relative times for handling heavier, for handling a heavier shaft, one against the other, giving them the amounts of something like 5½ pounds for the Model T shaft, and 11 pounds for the Model A shaft. One weighs about, about twice as much as the other.

And, Mr. Rauser, who previously testified here, told me that there must be some allowance for the larger shaft. In other words, fatigue enters into it, to a certain extent.

Q. Well, now, does your method of computation take that into consideration? A. My method of computation

assumes that the amount of handling time would vary in the same proportion that the machine time did.

In other words, the cycle of the machine on the T shaft slows down, or the time slows down on the A shaft from 25.3 seconds to 29 seconds. And, likewise, I have assumed that the handling time would slow down correspondingly in the same proportion.

Q. How would that affect the increase, or how would that affect the handling time? Did you make any computation as to the number of hundredths of a minute, roughly, that would increase the handling time? A. Well, assuming that the handling time would be approximately a **(1886)** quarter of a minute, or .21, or .22, as it was timed out here in this Westinghouse machine the other day; that would be approximately one-sixth—one-seventh of the total turning and handling time of the machine, the total operation of turning the cam, shaping the cam; and the one-seventh applied to this adjustment of, oh, three or four seconds. Let's see, it is from 25.3 to 29—less than four seconds. You can see that it is going to be less than a second difference, no matter which way you figure it. It is very simple.

Q. Yes. Your "four" there was not four seconds, but .04 of a minute, you meant? A. No. I was figuring the spread from 25.3 seconds to 29 seconds.

Q. Oh, I see. A. So that if you assume that if all the handling time was constant—in other words, if there was no variance at all—it would only mean a difference of one second in your computation. But, I know that, from what Mr. Rauser tells me, the handling time isn't constant, so that it is somewhere between no seconds and one second.

The Master: Well, why is your one second the upper limit? You are assuming that the handling time increases in proportion?

A. Well, that is as high as I have gone in my computation. That is the maximum amount I have used in this computation for handling. That is the maximum. I have used the cycle time, the maximum time as the maximum time, 25.3 to 29; that is a jump of three seconds and .7.

Now, if you figure the handling time is roughly about one-sixth or one-seventh of the total machine time, you see it **(1887)** takes about, over a minute, 1.20, to consume the whole operation.

Well, now, when you figure that the handling time is perhaps only .21 minutes or .22, or, say it is even .25 minutes, and that was what Mr. Rauser got approximately on the Westinghouse, and, I believe, also on the Walcott lathe the other day.

(1888) So, you can see that is a quarter of a minute against a minute and a quarter.

Well, that would be one-fifth. Well, one-fifth of your spread of your 3.7 per second is less than a second. And that is assuming that all of the handling time would be constant for that one second. It is less than a second.

Now, somewhere between that 0 and 1 second, there might be a point where you could just point and say that is the variance in handling time caused by handling time.

It can't be less than 0, and it can't be more than 1 second.

The Master: Well, it can't be more than one second if you assume that handling time doesn't increase in any higher proportion than machining time does when you use a shaft with a larger perimeter in the cams, and a heavier shaft; while the perimeter varied only very slightly between the model T and model A cams, the weight varied approximately one hundred per cent, did it not?

A. Well, in other words, you think that the handling time might be more than the difference between the machining time?

The Master: Well, I wasn't expressing any opinion as to what I thought. I was just trying to get clear as to how you arrived at the statement, or the basis of your statement, that the maximum increase in handling time would be less than one second. You are basing that on the assumption that handling time cannot or would not increase in any higher proportion than machining time?

A. That is right. That is right. Perhaps you are right there. **(1889)** However, if that would be true—you see, in Mr. Moise's computation, he has assumed that the handling time doesn't vary at all periods, and, I am assuming that it varies as much as the machining time. And, you have it in mind that it is even higher than that.

The Master: Well, I am just wondering.

A. Well, it is possible. I am not saying it isn't. I know there must be some difference, but I am not saying how much difference there would be there.

I don't think you could say there wouldn't be any. But, no matter what you used as the handling time if only a quarter of a minute or less, it is not going to be material in the net result. It is only going to be a matter of a second or two.

Q. (By Mr. Farley, continuing): I find the weight of the two shafts, the model A and the model T shafts are given on page 18 of the first statement of account. That is the finish weight? And the variation, finish weight, of the model T is 3¼ pounds, and the model A-6250 is given as 5½ pounds? A. I believe the rough forgings are from about 5.8 pounds to 11 pounds.

Q. Something like that. A. That is the rough forging. Of course, our operation is about a third of the way long. It wouldn't be either of those.

Q. That is right. A. You see, we are working on operations, about 12 or 13 pounds, so it might be about 4 pounds to 8, something like that. It is roughly 2 to 1.

(1890) Q. All right. A. Well, then, returning to page 9, we make a similar computation for the Ford cam shapers as we did for the Melling cam lathes. In other words, we multiply the production in column 1 by the hours in column 2, to get the average—I mean, to get the total number of hours for the two operations. Actually, there is only one, because there is no straightening operation.

All the way through, I assume that when I say two operations, I mean that there is no time for the straightening. Actually, there is only one operation.

Q. Well, why do you use the expression? A. Well, I just want to be comparable with the wording on the Melling cam lathes. In other words, I would like to infer there that the times should be corresponding for the same two operations; but, you have to go one step further and show that there is no straightening operation for the shaper.

In other words, if I said for one operation up there on the shaper, and, two operations on the lathes, why, immediately, somebody would raise the question, "Well, why don't you keep the one operation with the two?" At least, that is my idea. And, multiplying the number of hours times the other, you arrive at the direct labor operations in

column 4, which contains $86,921.15. And that total is carried to the summary on page 8 under the cost of Ford cam shapers.

Now, if you will add the three costs together, the direct labor, depreciation, maintenance repairs, you will get the amount, $143,884.75.

Now, that is the total cost for the two operations on the **(1891)** Ford cam shapers. You divide that by the total production of 4,220,990 shafts, and you get a cost per cam shaft of .0341.

And, likewise, if you do the same for the Melling cam lathes, you get the cost per cam shaft of .0413, and an overall loss on the four million odd cam shafts of $30,697.91.

Now, that takes us over to page 13.

Q. Before you go to page 13. A. Yes.

Q. Your depreciation figure is the same as that employed on the same sheet, sheet 8 of Exhibit C,— A. (Interrupting): Yes, I think—

Q. (Continuing): —is that true? A. Yes. I think I have already brought out that the direct labor operation is the only one I have changed.

Q. And the figures for depreciation you obtained from the machinery valuation records which were identified by Mr. Pellinger? A. Well, indirectly, yes. We obtained the cost of the machining from those records.

Q. Oh, yes. A. And, naturally, we had to figure the depreciation year by year.

As stated in Exhibit C, we used the depreciation rates which were allowed by the income tax department of the Government for the various years.

Q. Yes. And, as to the maintenance repairs, certain of those figures were taken from, also from the valuation costs? A. No. Those maintenance repairs were taken, were based upon the **(1892)** fact, or the testimony of the witnesses, now, that four men were used in department 410, for maintaining the Melling cam lathes on the second and third shifts, while only two men were used on the cam shapers on the same two shifts.

Q. And, you heard the testimony of Mr. Pellinger and Mr. Smith, that in addition to the four men that were used in the shop right down to the department 410, they had to keep two men working on slides and things in the tool room? A. I did.

Q. You made no additions to the maintenance repairs, however, in view of that testimony, did you; is that correct? A. No, I didn't change that figure at all.

* * * * *

(1895) Q. This figure that you have used, 60 per hour, is somewhat larger, is it not, for model A production on the Melling lathes than the figure given by Mr. Meyers when he testified? A. Yes. If you remember my first computation in Exhibit C was based upon 25 an hour, and that was based upon information obtained from Mr. Meyers, and, Mr. Shawkey, I believe, both of them, to the effect that 25 per hour was what they actually expected out of the machines.

However, in view of the fact that we found this operation sheet in the engineering files in the Ford Motor Company, I felt that we should use the time on the number of pieces that showed on an actual record.

And, I might state that throughout all my computations I have endeavored to use records that were available, and in that way, I have increased, or, in fact, I have decreased the loss on this computation from $15,000, I think, for just this one—about $12,000 for just this one change.

In other words, I formerly used 50 per hour for the Melling computation, and, now, I am using 60 per hour.

Q. What was the hourly production that you ascribe to the Walcott machines on the production of model T shafts in your original— A. (Interrupting): That is 35 per hour, based upon the Marantette **(1896)** time study, and also supported it by the Payne reports.

Q. Now, the Marantette time study being— A. Exhibit 14.

Q. (Continuing): —Exhibit 14? A. Yes; attached to Exhibit C.

Q. Attached to Exhibit C? A. Yes.

Q. And the Payne reports and the Marantette time study have been duly proven and identified by the witnesses, and received in evidence, were they not? A. Yes, they have.

* * * * *

(1899) Q. And, sheet 15, sheet 14, you have already discussed, have you not? A. Yes, I have. I have already covered that pretty completely.

Q. And the sheet 15 shows the manner in which you figured depreciation, is that right? A. That is right. You will notice that the total amount is $18,223.14, and that checks in with the schedule on page 13.

Q. Now, I notice that the next—is that all—any further comments—it doesn't seem to be necessary. A. Well, because of the fact that I didn't change the depreciation on the Melling cam lathe, why, that remains the same, and we need no substitute pages.

(1900) Q. Yes. A. I only inserted pages that were necessary, of course.

Q. Yes. And all of these pages are substituted in accordance with the correspondingly numbered pages in the other exhibit? A. That is right. In other words, the old sheets are no longer of any value as far as my computations are concerned. I don't mean to infer that both of these computations should be left in the record, at least, the result.

Mr. Spohn: What was the last there? Will you read it back, Mr. Reporter?

(The answer was then read by the reporter.)

The Witness: Did you get what I mean? I mean one is—

Mr. Spohn (Interposing): One is a substitute for the other?

The Witness: One is a substitute for the other, yes, in so many words.

Q. (By Mr. Farley): Now, as far as your page 17 is concerned, are you ready to take that up now? A. I believe so.

Mr. Farley: Just off the record a minute.

(Discussion off the record.)

Q. (By Mr. Farley): All right, go ahead. A. Do you want me to go ahead on 17?

Q. Yes, please. A. I have already testified in the prior proceedings, this schedule 4 is a method, so-called comparison method.

In other words, if you find a loss on the model T shaft, using as a standard of comparison, the shaper, and assume that **(1901)** you could have used the shaper on the F shaft, that same rate of loss would apply per shaft.

Taking the first example there—we had a loss on the model T shaft or comparison, using the shaper, of $35,585.35. Well, now, we produced cam shafts to the number of 3,420,166.

Now, that production divided into the loss will give you a loss of .0104 per cam shaft.

Now, we produced 275,664 model F cam shafts. And, if we apply the same loss per shaft that we determined in the T comparison there, multiplying that loss times the F production, we get a loss of $2,866.91.

Now, if we use the Model A comparison, using as a standard of comparison, the shaper, again we get a production of 4,222,999 shafts, and, we lost on that production $30,697.91. Applying that same loss per shaft of .0073 to the production of the model F shaft, we get a loss of $2,012.35.

* * * * *

Q. (By Mr. Farley, continuing): Well, now, on these comparative costs as set up in these various schedules, I note that there **(1902)** was no charge for burden, as such, is there? A. Well, now, by burden, or overhead, you mean the extra cost in addition to labor.

Well, now, burden includes depreciation and maintenance repairs, and I do have those. Those can be classed as burden or overhead. And, in the model T comparison, I also have extraordinary repairs, which is another form of burden.

You will note on the bottom of page 8, or in fact, on the bottom of every summary page of each schedule, this note, and, I will read as follows:

> "No cost records are available to show by separate operations the comparative power cost, tool costs, scrap losses or other incidental items."

Now, I would like to explain our theory—by that I mean, Mr. Russell's and mine on this method. Just think of what problem you are up against when you are faced with the problem of determining how much one machine costs to operate as compared with another. What do you first think of?

Of course, you think of the operators first. How much time it takes him to perform his jobs on that machine. Then

you think of the cost of the machine itself. And that is how you figure your depreciation.

Now, naturally, no two machines would cost the same amount of money. There must be some difference—unless there is one chance in a thousand or a million—so, there must be some difference in the depreciation cost. Then, there is maintenance cost.

(1903) No two machines will operate identically as to maintenance. Now, so far I have been able to determine the direct labor cost, the depreciation cost and the maintenance cost.

Now, to my mind, the only other major cost might be tool costs. And, I believe, it was brought on in testimony here that tool costs for Melling machines would probably run higher than tool costs for the Ford cam shapers.

Therefore, if I have omitted the tool costs from my computations, I have necessarily penalized the defendant, because, had I been able to determine the tool costs, it appears that my loss would—computations would be greater instead of smaller.

Now, to me, those four items—labor, depreciation, maintenance and tool costs—would be the major things I would look for in the difference between the operations of one machine as against the operations of another.

Well, having those four main costs, I believe we have got the meat of the whole proposition.

However, let us go on down the line and take the other costs which will probably be included under the term of burden or overhead. We mean taxes, insurance—well, now, taxes would be property taxes, perhaps, mainly, and maybe, you get an element of income tax, but, anyway, the tax item shouldn't vary very much between machines. It should be fairly constant.

And, insurance—that should be immaterial. Heat and light should be on perhaps the space occupied. And, I **(1904)** believe that the 16 Melling lathes would probably occupy more space than the 13 shapers.

I don't know for sure. But, anyway the difference wouldn't be material.

Then, you take power costs. Of course, these machines are all run by motors, and it is possible that the power costs might vary slightly. It depends on, I think,

the horsepower of the motor. We were unable to determine exactly which type motor was used on each machine.

Q. Let's see, does the permanent inventory shapers—do any of those cards specify the size of the motors to be used? A. I think we bought those without motors. At least, that is my recollection of it.

(Mr. Farley refers to some papers.)

Mr. Farley: It apparently doesn't specify on these cards—but—just a minute—

A. I might go on to say that another item might be —of course, supervision—and supervision would include shop supervision. In other words, the superintendent, the foreman, and, from the testimony that has been given heretofore, I think that the Melling lathes appeared to have caused more trouble and needed more supervision than the shapers. However, we have nothing definite on that, so I haven't attempted to make any computation on that basis.

Q. You mean supervision on the part of the foreman? A. Yes.

Q. Now, on this manner of spacing, this matter of space occupied by the machines, I notice you just said that you thought that **(1905)** the model T cam shapers probably occupy more space than the Walcott machines? A. I said less.

Q. Less space? A. I said probably that the Walcotts would probably occupy more space than the shapers.

Q. I twisted it around inadvertently. And, I find that by taking the Defendant's Exhibit 53, the photograph of the cam shaper, and measuring one of the cam shafts that appears on that photograph of the model T cam shaft, you see it is just 2⅛ inches long. The bed of the machine measured in the same way is 4¼ inches long—a little less than 4¼ inches.

Q. And the photograph is a straight view in front, so there is no distortion, appreciable distortion, because of perspective.

I just mentioned one of these model T cam shafts. I find it is 23 inches long, and, therefore, that would give you a space of about 46 inches square for the bed of the machine.

Do you remember seeing the Walcott machine out there at the plant? Would you say that the Walcott machine

was very much longer? A. Oh, I believe the Walcott was considerably longer. There must have been a half dozen men lined up on one side of that Walcott machine. It looked pretty large to me.

Q. All right, go ahead. A. Regardless of that, the comparative heat and light probably (1906) would be minor in any computation, so that I haven't considered that either.

Q. Heat and light? A. Heat and light, yes. In other words, I have taken the major items that would really mean something in a difference computation.

Q. Well, now, suppose you had used the alternative method of applying the departmental burden rate, which, I understand, is available for many of the months of the period in question, what effect, if any, would that have upon your computations? A. It would still result in a loss. But, let me explain that. That is only an approximation method.

In other words, you are only dealing with one factor in that. You base everything on direct labor.

In other words, as direct labor goes, so goes the burden or overhead, because you apply a percentage of direct labor to arrive at your burden figure. So, actually, it would do you just as well for comparative purposes to just compare direct labor.

That is the only element that you have got in the direct labor computation, and takes on an added percentage for burden.

Now, that doesn't get you any farther than where you were to start with on your direct labor. Therefore, that is only one element out of at least four major elements that you must consider in arriving at comparative costs of operating two different machines.

(1907) In other words, if you get a loss by using just direct labor, you will continue to get a loss if you add on a certain percentage of that for burden.

The Master: Well, it wouldn't mean anything if you assume a loss. Where there was a profit, it would become very important.

A. If there was a profit, you would add just so much on profit.

In other words, if direct labor results in a profit by your burden method, you just add on 150 per cent, say, for burden. But, you wouldn't take into consideration, perhaps, the varying costs of other operations, other elements of costs, such as maintenance or depreciation.

Those wouldn't even be considered in that very instance, because you have assumed that direct labor is the only varying quantity or element.

Suppose you do have a profit on direct labor and a loss on maintenance, say.

The Master: Yes.

A. Well, now, if you add a certain percentage of the direct labor on to the direct labor profit for burden, you can use that as your final figure. You forget the fact that your figure showed a loss, and that is a burden element.

The Master: Well, I suppose that is beyond question from a theoretical standpoint, that method wouldn't be satisfactory into going into the various items of overhead in determining how much profit or how much cost is attributable to each one of them.

There might be a question as to whether or not it is a **(1908)** practical matter, particularly in view of the fact that the Ford Motor Company has kept its cost figures on a basis of direct labor plus a certain definite percentage for overhead, based on the direct labor costs, as to whether you can get at the actual overhead which should be attributed to the respective machines any more accurately by your method than by the other method?

A. Well, I will grant you that for general accounting purposes, the burden percentage direct labor is used, almost universally for general accounting purposes, because that is the easiest method that is available, because that gets in your whole cost. Your whole burden cost is into your figure.

In other words, you take your percentage, your whole burden cost is to the labor, and you get that in your accounts, naturally. But, here we are faced with determining the cost of the operations of two machines.

Q. (By Mr. Farley): The operation of one machine as compared with the operation of other machines? A. Yes.

Q. Assume now, for the sake of the assumption, Mr. Woehrle, when the Ford Company is determining cost of the part cam shaft, the entire cam shaft, as shown in the cost summary cards, it is essential there that the item of burden be added to determine how much money it is costing the company to make that particular part? A. That is right.

Q. That is right? A. Sure.

(1909) Q. Now, assume that, let us say, that some one of these months, where the burden was 180 per cent, we will say— A. (Interrupting): Yes.

Q. (Continuing): —I think there were some months where burden figures were exactly that high. And, that, of course, includes all of the advertising, and all of the cost of the administration, and everything else that goes into the swelling of the expenses, but which have nothing to do with direct labor—that is true, too, isn't it? A. Well, you might be going a little bit too far when you include advertising in that.

I don't know actually what they include in their overhead percentage, but, usually it is the supervision and salaries of the shop men. The others are the administrative expense. That is not included ordinarily as a burden cost, but as a separate cost.

The Master: Don't you understand that in the Ford system it is included in the burden cost?

A. Well, I think Mr. Hovis testified that certain administrative expenses were, but, I doubt very much, unless the system is unusual.

The Master: Well, they have got to be figured somewhere in the cost.

Mr. Farley: It would seem that way to me, too.

The Master: After all, they have got to get enough money in selling automobiles to take care of those expenses.

A. Well, I think ordinarily you will find there is a cost of manufacture, and, then, there is so much allowed for selling (1910) and administrative expenses over and above that.

Now, your overhead is only in the cost of manufacture. Actually, that is the figure they apply to direct labor when they figure their manufacturing costs.

Q. (By Mr. Farley, continuing): Well, now, of course, if we take all of the figures which enter into the Ford system of figuring burden—let us assume, of course, that that would include, just we will say, four or five sweepers in the entire department, in the cleaning of the department, and probably ten supervisors as foremen, and all of the other odds and ends that they would have around as maintenance in the department—would you, as an accountant, reach the conclusion that the change in the type of one machine to another machine in the department would affect that burden in any way? You see what I mean? A. No, I don't think it would. Except as I said in supervision of the two machines by the foremen or more that had to work—I mean supervise—that might change—it is possible that might change it very slightly. I might increase my span of saying shop men, to include an overhead of anybody in connection with the production, or, like anybody, even the vice-president, Mr. Martin, his salary might be included; likewise, Mr. Sorensen.

Q. Herklotz and men of that type? A. Yes; who are actually supervising production. It is possible even to get some of the higher-salaried men in the burden figures.

Q. Well, now, just assuming the situation here, and assuming that (1911) you were going to attempt to determine actual profit that might be made by the Ford Company merely by the use of one machine as compared with another machine, and assuming that your figures, instead of showing a loss, had actually shown a profit; do you think it would be proper to add to that profit, to load that profit, as it were, with the burden figure, that could be said in any way to be profits made by the company by the mere use of the machine? Do you understand what I mean? A. Yes, I understand what you mean.

Well, the way I think that any of these elements of burden, they would be different for one type of machine as compared with the other, and should be taken into consideration. Now, whether Mr. Martin's salary, or Mr. Sorensen's salary, or some of the higher salaries that are included in this percentage should be tacked on, now, that is another question, which, I don't think should be added.

In other words, I don't think the total burden percentage, perhaps, should be tacked on to the labor cost, be-

cause there must be, perhaps, be some elements of burden that don't affect the two machines in question.

Q. That is in no way affected by the operation of either machine? A. That is true. There might be some of that.

Q. In fact, assuming all of these elements that go into the figure which comprises the burden of 180 per cent, most of them would in no way at all be affected, or made to vary by the change of one machine or another machine, is that true? A. Well, you are going pretty strongly in saying most—but there **(1912)** is no doubt that there are some expenses in that burden figure that don't affect either machine.

Q. That would not affect either machine? A. No doubt about it.

The Master: Well, there would be some expenses in addition to the four or five which you specifically considered here?

A. Yes.

The Master: Which would be affected by a higher direct labor cost in the use of one machine, attributable to another, for example, your payroll department would have more to do, and your personnel, and, then, there would be things of that sort that would have to be taken into consideration, would there not?

A. Well, I think that would vary on the number of men rather than the actual dollar expense. .

The Master: Well, you are figuring the labor rate as being the same with each machine, and, so, probably, if there was a variance in labor costs, why, that variance would be attributable to the necessity of using more men on the one machine than on the other?

A. Well, now, wait—we are figuring the time it takes a man to operate one machine; not the number, but the time.

The Master: Well, if it takes one man, for example, if it takes just twice as long to operate one machine as another machine, why, you perform the same operation, the men aren't working any longer, but you will have to have just twice as many men for one as the other, wouldn't you?

(1913) A. Oh, if the difference is that great, yes. In this case, we have 16 machines against 13 or 14, say. Now, that may mean a difference of one man.

The Master: Well, there may be a slight difference, or there may be a great one, but the principle is just the same, isn't it?

A. Well, I suppose you are right. But it seems to me that the added clerical help to maintain or supervise the duties of this one added man, it is so small or minute, that it is hardly one to consider.

The Master: Well, I thought Mr. Farley was getting away a bit from this particular statement of account in asking the more or less general question as to whether if a profit were revealed by a comparison of two machines from a direct labor standpoint solely, as to just what or how you would compute the burden, how you would take into consideration that in determining what the total profit was. If you take these, your comparison on the two machines that you have made, the cam shaper and the Melling cam lathe, and accept your figures, why, you get a deficit anyway on the direct labor, or, so I think.

A. That is right.

The Master: Mr. Farley's question went beyond—

A. (Interrupting): That is right.

The Master (Continuing): —the account of the general question, and that is what I assumed, and that is the reason I asked my question that way.

Mr. Farley: Well, perhaps I was getting a little bit **(1914)** off the subject there myself. I was just a little bit curious about it. But my general impression was that will exist if there was a situation of this kind, it wouldn't seem to me, it wouldn't seem to me that, where the savings that we talk of in a situation of this type, assuming that there was a saving, would be the reduction of the hours of productive labor, than that the other variable of standing overhead should in any way be any part or measure of that. That is what was running through my mind.

The Master: You mean you would have to have that overhead anyway, even with a few employees?

Mr. Farley: Yes, I mean you would have to have that overhead anyway even with a few employees, and it wouldn't make any particular difference to the overhead figure.

Assuming that you had an overhead granted for the number of law books you had in here, and it wouldn't seem that it would make any particular difference to the post-office department whether you have U. S. Reports in there, or Michigan Reports on the shelves. That is the way the thing was sort of running through my mind, and I wanted to see from Mr. Woehrle, as an accountant, whether I was right or wrong. That, by taking that box there and putting a desk in place of it, it wouldn't seem to me that it would be an overhead chargeable to the building, except the depreciation figure which he has separated.

The Witness: Well, naturally, there are certain items which should be considered, and certain items which should be excluded, and I considered all the important ones, I believe; **(1915)** and the others are immaterial.

In other words, the others shouldn't vary one machine as against the other. They shouldn't vary considerably.

I am assuming that they are practically equivalent.

The Master: Off the record, Mr. Reporter.

(Discussion off the record.)

Mr. Farley: Suppose we mark this one Exhibit 299.

(The document above referred to was thereupon marked Exhibit 299.)

Mr. Farley: I don't suppose there is any objection to this in evidence, is there, Mr. Spohn?

Mr. Spohn: We have no objection to the offering of it, but, we don't want to be bound by the figures.

Mr. Farley: That is all right.

Mr. Spohn: In other words, we had no opportunity to check these figures. In other words, if it becomes necessary to offer our own proofs on it, that we may be permitted to do so.

The Master: All right. Then, we will adjourn until 10 o'clock tomorrow morning.

(Whereupon an adjournment was taken until Friday, February 3, 1939, at 10 o'clock A. M.)

* * * * *

(1918) RE-DIRECT EXAMINATION (Continued) by Mr. Farley.

Q. Now, at the conclusion of the hearing last night, as I recall it, we were discussing the matter of burden, and I believe you stated you would make some effort to find out just what was included in the burden figures which are employed on the cost summary cards, and other similar records of the Ford Company, and which gave certain burden figures ranging, if my memory serves me right, from probably 150 to 200, per cent, and over 200, in some cases.

Did you make any effort to get any more detailed information on that? A. Yes, sir, I did.

Q. And, just state the source of your information, and what the information is. A. I called Mr. Fred Hovis this morning—as you recall, Mr. **(1919)** Hovis testified here, and is an employee of the Ford Motor Company—asking him to give me a breakdown or a detail of the accounts which made up the overhead computation or percentage; in other words, expenses that were included in the computation, to arrive at the overhead percentage of, say, 150 per cent or 160, whatever it might be. And—

Q. Just for the purpose of the record, so that the testimony would tie up with some of the definite records, let us assume, take, for example, one of these cost summary cards—this will do as well as any—I am referring to Exhibit F-3. Let us take the last month there, I think it is November, 1924—well, that isn't a good one, because that isn't in the so-called accounting period. Perhaps you could select one of those yourself. A. All right.

Q. You are more familiar with them. A. Suppose we take F-6. And, the month of March, 1928, for instance. Now, for Department 410, it gives labor cost of .4926 and a burden cost of .5742. Now, if you will divide the burden by the labor, you get the percentage of burden that has been applied to that labor figure.

Q. What is that, a "T" card? A. That is a "T" card; yes.

Q. That was March, 1926, did you say? A. March, 1928.

Q. March, 1928. Now, I see in one of your computations, I am referring now to Defendant's Exhibit 200, that figured according to your computation there 117 per cent. A. I believe that is about right.

(1920) Q. I will show you your own (handing document to witness). A. All right; 117 is right. That was obtained from cost summary card form 3566, and that is the Exhibit F-6.

Q. Will you continue and explain, Mr. Woehrle, just what is included in that burden figure? What are the accounting practices of the Ford Company? A. It is a practice of the Ford Motor Company to include therein administrative salaries or portions thereof—and, by "portions thereof," I mean, perhaps, I might mention a few names; Mr. Martindale in the cost department, his salary is split 50-50; Mr. Bennett in the service department is split 50-50.

Q. Just what do you mean split 50-50? A. 50 per cent to manufacturing expense and 50 per cent to commercial expense.

Q. And, therefore, the overhead burden in Department 410 would be in the manufacturing expenses, and 50 per cent of that salary would be charged against that department proportionately? A. For manufacturing expense.

Q. Yes. A. In other words, these men devote a certain part of their time to the actual production of the car; and, in accounting practice any expense in connection with an actual manufacture of the car is a justifiable charge to the manufacturing expense which, in other words, is your overhead or burden.

Mr. Spohn: Who was the second man, Mr. Woehrle?

A. Mr. Bennett.

Mr. Spohn: Mr. Bennett?

A. I don't know whether I want to mention all of these men. **(1921)** But—

Mr. Farley: I see no objection.

A. Mr. Edsel Ford is 50-50; Mr. Sorenson, 100 per cent of his salary is in manufacturing; Mr. P. E. Martin, 100 per cent of his salary is in manufacturing; those two men have offices right out in the plant, and spend practically all of their time, as I understand it, in the direction of the production of the cars.

Mr. Farley: That is correct.

A. That is the first account that is put into our overhead computation.

Q. Of course, you haven't got the figures of salary there? A. No. They didn't call those over the 'phone. In fact, those are on the parts list, the salary list, and they are confidential. If it goes far enough that we have to get to a percentage of what the direct expenses chargeable to burden are, or the indirect, we might have to go that far. I don't know. But, so far we haven't done that. I have a list here of some 30 accounts which go into the burden percentage, and I assume you want me to read them all into the record.

Mr. Farley: Yes. I think it will be best.

Q. Well, let us start at the beginning, and make a list of them.

A. Account 600, administrative salary;
601, depreciation, land improvements;
610, depreciation,—

Mr. Spohn: A little slower.

Mr. Farley: Mr. Spohn, we will give you a photostatic copy, or have this typed up.

Mr. Spohn: All right. That will be fine.

(1922) A. (Continuing):
610, depreciation of buildings;
620, depreciation, machinery;
625, depreciation, durable tools;
630, depreciation, factory and miscellaneous equipment;
645, depreciation, freight car equipment;
650, depreciation, locomotive equipment;
660, depreciation, power equipment;
681, insurance;
682, experimental engineering and designing;

683, moving and re-arranging department;
684, factory supervision;
685, final inspection;
686, miscellaneous manufacturing expense;
687, power operations.
And, by that I mean to include heat, light and power,—

Mr. Spohn: All three?

A. (Continuing): Heat, light and power in that figure because of the fact they produce their own power out there. They have their own power plant, and the steam is generated in the plant for heating, and all of the electricity is generated in the plant.

Continuing with the expenses, we have
Account No. 690, repairs to land improvements;
700, repairs to buildings, fixtures, and structures;
710, repairs to machinery;
715, repairs to durable tools;
720, repairs to factory and miscellaneous equipment;
735, repairs to freight car equipment;
(1923) 740, repairs to locomotive equipment;
750, repairs to power equipment;
755, expense, tools;
757, insurance, which is employees' liability and compensation.

Mr. Spohn: 757?
Mr. Farley: Yes.

A. (Continuing):
766, sweeping and cleaning;
780, taxes, state, city and county;
781, taxes, social security;
I might state that that is a recent expense, and no doubt during our accounting period that expense was not in existence.
(Continuing):
785, miscellaneous services for employees;
That includes first aid and things like that.
786, timekeeping, payrolls, and factory clerical salaries.

Q. (By Mr. Farley): Now, that includes 31 different items, which are incorporated into the burden figure as given in the cost summary cards? A. That is right.

Q. Now, how many of those factors, in your opinion as an accountant, Mr. Woehrle, should properly be taken into consideration on a matter such as we have before us where your effort is to determine comparative costs in the use of two machines for performing one of the 50 or 60 operations in that particular department? A. Well, going down the same list, the first item that I come to which I would include would be Account 620, depreciation of **(1924)** machinery. As you recall, that is included in my computation, Exhibit C and Exhibit C'. The next item is 625, durable tools.

Q. Now, durable tools there, do you understand what that is intended to refer to? A. Well, that is usually in like presses and punches, and, oh, things that are pretty heavy that might last a number of years such as, oh, jacks and these automatic lifting devices for swinging equipment around. I forget what you call them. It is possible—

Q. That apparently, then, is a separation in two separate items of two different types of machinery, is that the idea? A. That is right. Now, I might state that as durable tools themselves, it is possible that none of those durable tools were used around the machines in question which we are here accounting for.

Q. So, it would be your opinion that it would only be the item 620, depreciation of machinery, which could or should be considered, and as I understand your computations, and your testimony, you have included that in your computations? A. That is right.

Q. Very well, now. Are there any other items on the list which, in your opinion, should be taken into account? A. Well, 681, insurance, might be taken into account; fire insurance, or insurance on the machinery itself might be an item. But, it would be very immaterial.

Q. How would the item of insurance affect the matter of operating these machines? A. Well, it wouldn't affect the operating at all.

(1925) Q. Of course, it is the cost of operating that is the matter we are concerned with here, isn't that right? A. Well, it is also the cost of maintaining the machinery. In other words, I mean like depreciation cost, you figure on the cost of it, and if you have, if you insure one machine for more money than you insure another, why, that might

affect it, or that would affect it. If you assume the insurance is based upon, say, the total building, one machine against the other probably would be immaterial.

Q. I can see there might be a factor there if one machine, for example, we will say, cost $50,000 and one $5,000. A. That is right.

Q. Do you know anything about what those insurance rates are? A. Oh, I wouldn't want to make a guess, no. I don't know exactly. I have seen quite a few of them. I think it is something like 21 cents a thousand, or gets up as high as 38 cents a thousand, depending upon the location.

Q. That is for a year? A. That is over a three-year period, I believe.

Q. If it is 21 a thousand, that would be 7 cents a year a thousand, and if the variation between the two machines is only a matter of a couple of thousand dollars, it wouldn't make very much difference in the computations? A. No, I don't think in figuring your insurance schedule, if you took out one machine and put in another, I don't think the person figuring the amount of insurance coverage you should have would be affected by the mere change from, say, a $5,000 machine to a $4,000, or vice versa. In fact, as a matter of fact, the shapers cost more money than the Walcott machines, **(1926)** and if we were going to consider that factor, we would take out a little more insurance, perhaps, if we were being—

Q. It would tend to increase the cost of operating the shaper. A. Well, as I said, just from a $5,000 to a $4,000 machine; a thousand dollars wouldn't be material.

The Master: You are talking about direct insurance on the machines themselves. As far as the insurance on the plant, and indirect insurance of that sort is concerned, do you understand that is grouped under that insurance item there?

A. That is all insurance, yes. I don't think they would insure the machines separately; they insure them as a whole.

The Master: Insofar as you were considering, take, for example, fire insurance on the building itself.

A. That would be fire insurance on the building and contents,—

The Master: Wait a minute.

A. (Continuing): —which includes machinery and equipment.

The Master: Well, if you had a more expensive machine which you installed, which, however, took up considerably less area of space than the other machine, insofar as the part of the insurance premium which is attributable to the machine itself is concerned, you would have higher insurance cost, but insofar as the part of the insurance premium which is attributable to the building itself, your cost, which should be allocated to that machine, would be reduced, would it not?

A. Yes. But, I don't think anybody figures that close. That is getting pretty close when you figure that. As a matter of fact, insurance wouldn't affect the two machines, I don't **(1927)** believe. I don't think anybody would try to make a computation on that.

Q. (By Mr. Farley): Now, the items on the list that, in your opinion, should be taken into consideration, insurance was the last one? A. Well, of course, power operations, as was mentioned yesterday, which included heat, light and power, would be affected if the machines, for instance, the space occupied—heat, and light are figured on the space occupied. And, as we said yesterday, if the space of the Mellings was greater than the space occupied by the shapers, why, the cost of heat and light on the Melling machines would be greater than the heat and light on the shapers.

Power would depend upon the horsepower of the motor, horsepower rating.

The next item is repairs to machinery; and, as you recall, I have included that item in my computation, Exhibit C, and Exhibit C'.

Q. Under the heading "maintenance"? A. Maintenance; that is right.

Q. Maintenance repairs, I should say. A. Maintenance repairs.

Q. All right. A. "Expense, tools," would probably have in it the cost of the tool bits for the machinery. And, as I said yesterday, we don't have any actual cost figures on those, but testimony of certain witnesses tends to prove

that the tool cost on the Mellings would exceed the tool cost on the shapers.

Q. And that means, then, of these 31 items, in your opinion, the **(1928)** only ones that should be taken into consideration in these computations would be the 620, depreciation of machinery; the 710, repairs to machinery; and, 755, the expense of tools, with the possible exception of power operations, or insurance. A. And, I might also say taxes would be in the same category as insurance.

Mr. Spohn: Taxes, also, Mr. Woehrle?

A. I think if you have—taxes should be computed on a valuation basis. Of course, that would be on the cost of the machines.

Mr. Spohn: What account number is that, Mr. Woerhle?

A. That is 780.

Mr. Spohn: Yes, I have it; all right.

A. And, naturally, if the cost of your machines varies materially, you might prorate a slightly different amount for taxes to those various machines.

Q. (By Mr. Farley): Now, on the power equipment, if the two machines, the shaper and the Walcott machines, used exactly or very nearly the same horsepower motor, would you consider that, if that were taken into consideration and you found the cost of power or electricity to the Ford Company, would you think that that would make any appreciable difference in the computations you have made? A. No. Assuming the motors were the same, there would be no difference in the computation.

Q. I wonder if you noticed that the Walcott machine had, at Highland Park, a five horsepower motor for driving it, and on the Westinghouse machine they had only a three horsepower motor? **(1929)** A. I didn't notice. I know that the Walcott machines were ordered with a five horsepower motor. I don't know what they used on them.

Q. I don't suppose you make any check to determine what the power, electricity, cost the Ford Company per kilowatt? A. No, I didn't.

Q. I think we are justified in assuming that, naturally, the company operated their own power plant, which is

known to be one of the finest in the country, that the cost of power per kilowatt, then, is much less than if they purchased it from the electric company. That being true, would you think that you should take into consideration, let us say, in comparing the Westinghouse machine with the Walcott machine, the variation of the results from using a three horsepower motor instead of a five horsepower? A. Well, regardless of the total expense—in other words, if it would have cost Ford, say, 10 cents per kilowatt hour, and it only actually cost him 5, naturally that will cut down the proportionate difference. However, if I had a three horsepower motor as against a five horsepower motor, I would take into consideration the difference in the power consumption.

Q. I don't know whether you are sufficiently familiar with the electrical matters to have any particular judgment to present, or opinion to present on just what difference that would make in dollars and cents over this entire period of operation. A. Well, naturally, I am not familiar with the actual power cost, but if you take it this way and figure that two machines in that mammoth plant out there, you would have to pro rate, **(1930)** say, the total power cost per year over, say, 10,000 machines, and we are only interested in one machine. It is very likely that the power cost which you would ascribe to one machine would be very, very small.

Q. Very insignificant? A. Possibly, yes.

The Master: Do you know whether the power consumption varies directly with the horsepower rating of the motor?

A. No, I don't know of my own knowledge. I have been told that is one of the factors; at least, the most important factor, I believe. I think you have to also consider the voltage, or something else that you get.

Mr. Farley: That is right.

A. I wouldn't say of my own knowledge that that is true.

Might I add a few comments at this point?

Mr. Farley: Surely.

A. Just to sum the whole situation up; in other words, I assume that this total cost of department 410 for burden in

one month totals up to $100,000, and that is, say, 150 per cent of the direct labor. And, you have a situation where you added on 150 per cent of direct labor, which includes all of these various expenses.

Now, to me to add on to the direct labor cost of one machine as against the other, all of those overhead expenses is not right, because, see what you do; it is true you use the same burden percentage for both machines in the same month, but you are accumulating, adding on top of each side, each of your comparisons, say, 25 or 30 expenses, or 25 expenses, roughly, that, perhaps, do not affect the machines **(1931)** directly. There are no direct charges to the machines.

Q. (By Mr. Farley): You say "perhaps"? A. They did. So, what you are doing is pyramiding the burden cost and adding it on to labor.

Q. You are pyramiding the first figure you get by your direct comparison of productive labor by figures which really have no direct bearing on the comparison you are attempting to make, or the comparison of the figures you compiled, to show the actual facts as accurately as possible. A. That is right. Now, if we were to figure a burden percentage to apply directly to these machines, I believe it would be fair, or actually accurate, more accurate, to pick out the expenses which I have designated here as direct expenses, and figure the percentage on that, instead of taking all of the expenses in the computation of the total burden for the department. You might get an amount such as, oh, 50 per cent for burden instead of 150.

Q. Irrespective of any question of fairness, Mr. Woehrle, I think, if you will recall my definite instructions to you, when you started this particular work, was to get the facts and the figures from written records as far as they could possibly be ascertained, and from a study of the facts where some record might not be available to establish a fact, and to make the computations as accurately as possible. Eliminating any questions of fairness or unfairness, now, would you say that your computations have been made on that basis, from the standpoint of accuracy or presenting the true pictures? A. Oh, absolutely; no doubt about that.

(1932) Q. And, from the standpoint of accuracy, you would not, then,—it would not, in your opinion, be accurate

to include any of these 31 burden items, items that are constituents of the final or full burden figure, which is used by the company in the cost summary cards? A. I would use only a portion of them.

Q. And those which you have already testified? A. Which I have already testified.

Q. And, you do not think it would be accurate to include the others which you have eliminated? A. No, I do not.

Q. Now, as Exhibit C' consists merely of certain substitute sheets for the statement of account that you prepared, and which is entitled "Defendant's further statement of account," and which was marked originally Exhibit C, I think I would like to run over with you, briefly, the pages of your original Exhibit C, and your computations as contained therein, and have you state whether or not the facts which have been established by the testimony here, which you have listened to; what influence, if any, those facts would have upon your original statement. Suppose we take up, first, your paragraph 1 of Exhibit C, which was denied by the plaintiffs. The purport of that paragraph is that you had figured your computation as taking in the entire period because you state: "It would be less complicated than if an attempt were made to segregate or separate the entire period of operation by monthly, quarterly or annual periods of time." What can you state about that, as to whether or not you would change that now in view of the plaintiff's denial of it, or in view of any of the testimony which has just been offered? **(1933)** A. No, I think that stands as is; there is no change that I would make in that paragraph.

Q. As a matter of fact, your computation there was based upon, as I understand it, and your reference there, to taking the lump sum or annual sum, it might be termed, as contained on your sheet 1 of schedule 1. That is what that particular paragraph had reference to, is it not? The reason I am asking that is because I notice that your sheet 2 does give all of the figures on a monthly basis. A. Yes. For direct labor we do have it on a monthly basis, as set forth in schedule 1, sheet 2, month by month. Now, if you wish to arrive at the annual amounts, you will notice they are spaced off there with spaces between years. It would

be a simple matter to check those, and get your annual amounts, year by year.

Q. So that it is just merely a matter of arithmetic involved there, you might say, as to whether you are going to get the total figures as you have them on your sheet 1, a sum total, or to set them down on that sheet on a yearly basis and add them up on sheet 1. Isn't that about what the situation is? A. Well, for direct labor that would be a simple matter, as you say, to add them up by years, and then place them on the summary by years also instead of by total period.

Q. Now, suppose you had prepared your sheet 1 on an annual basis, or a monthly basis; would it change the situation at all? A. For direct labor it wouldn't change it a bit; not a cent.

Q. You say for direct labor it wouldn't change it a cent. Would it change it for any other figure that you took into account in making your computations? **(1934)** A. Well, of course, depreciation, now, we have gone on the annual basis, and that is a customary method for computing depreciation; and, naturally, if you want to figure that by years you would take the number of months in each year—for instance, in 1925, you have got 6½ months. Well, now, having the total depreciation cost for one year, you would take 6½ over 12, 6½/12, of that for the partial year, 1925.

For 1926 you need the whole year, so you take the whole year depreciation. So, when you got through dividing those by annual periods, you would still return and arrive at the same depreciation figures that I have for the total period involved.

Q. Now, just for the sake of the record here, or a little clarity. Suppose you just make a survey, without repeating all the figures in the record, of the sheet 2 of your schedule 1. As I understand, your computation, if you compare the figures in—I think you would call it the fifth column, which is entitled, "Direct labor cost of three operations," with the figures in the last column at the right-hand side of the sheet, "Direct labor cost of three operations," running down those two columns rapidly, do you find any month in which the direct labor cost, as computed by you for the use of the Ford cam shapers, exceeds the direct labor cost in any month for the use of the Melling cam lathes? A. Month by month there would be no direct labor cost on

the shapers which would exceed the direct labor cost on the Mellings, nor if you figure it year by year would it make any difference. You would still have a loss, or an excess cost **(1935)** on the shaper operations over the cost of the Melling cam lathe operations, no matter which way you figured it; month by month, year by year, or period by period.

Q. And, how would those figures be modified on the matter of depreciation which you were just discussing? A. It wouldn't be modified at all. In other words, you would have the same relationship month by month, or year by year, as you do have in the period by period comparison.

Q. Well, now, going again to the sheet 2, in your column 3 there under Ford cam shapers, "Hours required for three operations," production multiplied by 3.50 minutes, or by .05833333 hours, I notice you use the same language in column 6, but you have different figures. Now, just what is the significance of this three operations you are talking about there? A. Well, I would like to direct you to page 19 of Exhibit C, the bottom of the page. You have there a summary of the minutes required to put a cam shaft through three operations; they are straightening, shaper, turn cams,—one man operated two machines—and, third, finish grind cams. The Ford shaper, using no straightening operation, and adding the so-called three operations together, you get 3½ minutes for the shaper, and, likewise, on the Melling cam lathe you get a total of 3.66 minutes, using a straightening operation of a half minute.

Q. Now, as the time, minute time there, 1.20, is, I might state, a rather crucial figure, I would like you to again repeat as to where you got that particular figure? A. That is taken from Exhibit 13 attached to Exhibit C, operation No. 12; 1.20 minutes, and as you recall this exhibit is a **(1936)** typed copy of Spencer Libby's notebook, in which are a list of the operations of department 410.

Q. And, do you consider that Exhibit 13 and the Spencer Libby notebook, in view of the testimony you have heard, and in view of the independent investigations you made, a sufficiently definite or accurate record of the Ford Company that will enable you, as an accountant, to rely upon it? A. I do.

Mr. Spohn: It is a pretty broad question, your Honor.

The Master: It is rather broad, but I will let it stand.

Q. (By Mr. Farley): Now, referring to the straightening operation which I note, to which you charge no minutes under the title, "Ford cam shaper" at the bottom of page 19, and with respect to which you charge .50 minutes on the Melling cam lathe, I would like to ask you if you found any records of the Ford Company upon which you, as an accountant, thought were sufficiently reliable to rely upon as far as that information is concerned? A. Yes. I have the record, which is Exhibit 14, attached to Exhibit C, which is referred to as Mr. Marentette's time study, operation No. 12, straighten, .50 minutes.

Q. Now, did you make a direct comparison of the various operations as given in those two sheets, Exhibits 13 and 14, to determine whether or not they refer to the Ford model T shaft, 410 shaft? A. Well, the schedule, or the exhibit No. 14 is headed up model T-410.

Q. And, all the operations on those two sheets, I assume you have compared? A. Yes, I have.

(1937) Q. And, what difference was there, if any, between the two sheets so far as the number of operations was concerned? A. One operation was added to Exhibit 14.

Q. And, the difference between the two sheets is just exactly that of the addition of operation 12 for straightening? A. Well, you have to use the operation 13, "turn cam lathe," which is .86.

Q. You will find there the two differences, the operation sheet 13 containing all of the same operations with the exception of there being no operation listed between operation 11, "rough grind center bearing" and operation 12, which is marked, "shape cams." A. That is right. In other words, at that point the straightening operation was inserted on Exhibit 14, whereas it was not on Exhibit 13.

Q. And, also, the change in the middle of the operation from shape cams on the model T cam shaft shaper, and operation 13 on Exhibit 14, turn cam lathe? A. Yes. The very wording of the operation itself determines or tells you what machine was used on those two operations.

Q. Now, I don't think there is any particular dispute about the time which you ascribed to the shaper 1.20; that would be a production of 25 shafts an hour? A. 25 shafts an hour. I believe that is further established by testimony in the trial below, as well as testimony here in this present proceeding.

Q. Now, as to the time .86, from the Melling cam lathe; that, I understand, you employed as your second base figure in **(1938)** making your computations of costs? A. That is right.

Q. I would like to ask you now, witness, first, that specific figure of .86 was obtained by you, as I understand your testimony, from the Marentette stop-watch time study, Exhibit 14? A. That is true.

Q. And you used exactly the figure there given? A. That is right.

Q. .86? A. That is right.

Q. Now, did you have any other figure or, record, rather, which would tend to verify that particular figure? A. The so-called Payne report, which covers possibly a ten weeks' study in 1924, shows that while the machines were operating, that is actually turning, they got 35 and a fraction shafts per hour for one machine. Of course, that is just operating time alone. It is possible that some allowance should have been made for down time.

Q. I wish you would just refer to the Payne report, and where in the report you find record evidence that supports the statements you just made? A. Well, Exhibit W-1 is a summary that was introduced. That was introduced at a prior hearing, and if you add the hours on each of these weekly schedules, and also the number of pieces, you arrive at a total number of hours of 11330.75, and a total number of pieces of 404,440. And, making that division you get 35.69 pieces per hour; and, of course, **(1939)** you notice you are using just the hours run time.

Q. Actual running time? A. Actual running time.

Q. And how does that 35.69 pieces per hour, how does that compare with the figure, minute cost .86? A. Well, that compares quite accurately. In other words, one is 35 pieces per hour even, and this is 35.69.

Q. Did you know at the time you compared your Exhibit C that the Ford Company in its time study department computes on a basis of 80 per cent efficiency of a

machine; or, rather, 80 per cent running time? A. Yes, I knew that.

Q. And, it was your understanding, was it, that the .86 in the Marentette study was arrived at by making an allowance of that nature? A. Yes.

Q. What would you say as to whether, in view of the facts which have been brought out in testimony, as to whether or not you still consider your computation based on that .86 minute an accurate computation? A. I think that is as accurate as you can get it.

Q. Do you think that the use of that figure would tend to increase the cost or decrease the cost of operating the Walcott machines as compared to some of the other facts that have been brought to light, such as, for example, the Payne reports? A. Well, I think the figures I used would tend to decrease the loss, rather than increase the loss.

Q. That is, had you on the basis of the—let me ask this; **(1940)** the Payne report indicates on one of the sheets, I have forgotten which one, a notation in the handwriting of Mr. Wibel that the machines were 60 percent efficient. If you had taken that into consideration and taken 60 percent of the 35.69 pieces per hour, what would you then use as your computation?

The Master: Well, did Mr. Wibel testify he meant by that 60 per cent efficiency he was thinking of efficiency in the same light that the time study department was, and that is 80 per cent efficiency? I thought his testimony was that he was comparing the production with the guaranteed production of 45, which he claimed that the Walcott Company had guaranteed.

Mr. Farley: I don't think the figure would come out that way.

The Witness: I have a computation on that which shows that the actual efficiency based on the number of hours run, and the machine trouble and down time, would be approximately 65 per cent.

Mr. Farley: Let me state on that, if the Court please, in view of your question, Mr. Wibel's testimony—I definitely recall—was he arrived at the 60 percent efficiency by taking the number of hours that are totaled for the time when the machines were run-

ning—I might point it out to you while you have that in your hand, if you don't object (indicating)—he took the number of hours. You will note on the bottom of each sheet there is a horizontal line of figures, taking the sheet which is dated 9/19/24, that sheet has "Hours Run 50.7." That indicates the percentage **(1941)** of the time that the machine was running. The machine trouble was 34.3, and Mr. Wibel's testimony was that he eliminated the percentages in the two columns at the extreme right which totaled 13 percent, and gave the machines a little benefit of the doubt and said about 60 per cent no good, which is contained on that particular exhibit—I have forgotten the number of it. It don't seem to be marked.

That notation, for the clarity of the record, is marked on the sheet Exhibit No. W-14.

Q. (By Mr. Farley, continuing): Now, did you make any computation on that basis, Mr. Woehrle? A. Yes, I did.

Mr. Spohn: Will you read the question back again, now?

(The last question was read by the reporter.)

A. Well, to begin with, I think Mr. Wibel's computation is slightly in error. I think he used one machine there that was not assembled when he made his computation, so I have made another computation which shows that the actual efficiency was 64.544 percent.

Mr. Spohn: May I have that again?

A. 64.544 percent. Take the sheet that gives you August 11th to the 17th.

Mr. Farley: That is Exhibit W-2.

A. (Continuing): You will note the hours run total is 1108.75. Machine trouble is 422.25. I have excluded from that machine trouble the 120 hours that the machine was being set up. That is the very first machine at the top. I have eliminated that from my column called machine trouble, because I don't **(1942)** think we should penalize the machine for just setting it up.

Now, "tool trouble," there was no tool trouble on this, so I haven't included any factor like "No tools."

Later, on the next sheet, W-3, you will find there is a column for "Tool Trouble." Now, on that W-3, which is the August 18 to 22nd week, you will notice the total hours run is 979.75. Machine trouble is 671.25. I have used the amount of 551.25, which excludes the 120 hours for the setting up of the first machine.

Now, I have used 3½ minutes for tool trouble. Now, in making my computation of the percentage of efficiency, I have used the columns "Hours Run," "Machine Trouble," less the 120 hours each month for setting up one machine, and tool trouble, and those are the three that I took into consideration in figuring the efficiency of the machine, and I carried that computation through nine weeks, or to October 11th.

Q. I notice that, considering these sheets chronologically, that this first machine brass tag number, apparently while the first four sheets indicate that machine was out of commission for what they say "setting up," the next 5 sheets show that that particular machine was idle all the time, because it was not assembled for some purpose or other, and as I understand your computation, you have eliminated that machine which the sheet shows as idle? A. That is right.

Q. That is, you charge none of the time to that? A. That is right. I believe that is the difference between Mr. Wibel's computation and mine.

(1943) The Master: You say it should be the week of October 11?

A. Yes.

The Master: Why was that?

A. If you take a look at October 13—

Mr. Farley (Interposing): I think that gets you right to what I was saying. The last sheet, October 6 to October 11, shows that the first machine, brass tag 35472, was still in a not-assembled condition, is that right?

A. Yes. Now, the next sheet, they didn't take the study on all the machines. You see, we have only got 11 machines there, and I didn't think it would be logical to use only 11 machines, and in the next sheet they have only

got 9 machines. In the next sheet they have only got 7 machines. You see, this is the time in which they were starting to move the machines to the Rouge plant, so I only took the sheet on which all the machines were listed.

Mr. Spohn: Just one question, if you don't mind, on that. What number sheet did you take?

A. I took W-2 to W-10, inclusive.

Mr. Spohn: W-2 to W-10, inclusive.

The Master: As far as these last 3 weeks are concerned, in so far as the machines that are listed are taken into consideration, the relative amount of machine trouble does very sharply decrease, does it not?

A. I hadn't noticed. (Examining document.) Well, naturally it would, because you have got less machines. You mean the percentage.

The Master: The percentage. You will notice at the **(1944)** bottom of this week October 13 to the 18th, "Hours run 848"; "Machine trouble hours, 163.5"; that is considerably less than 20 per cent. It would be even a smaller percentage on the following week. And, the last week, the percentage is considerably under 20 per cent.

A. Of course, you have some tool trouble on the last one, which is 112. And, you have got—

The Master: Did you add the tool trouble in your computation, or did you simply take a relationship between the running hours and the machine trouble?

A. No, I added 42 hours for tool trouble. It is not a very important factor.

Q. (By Mr. Farley, continuing): As I understand it, you took the tool trouble in those sheets where the tool trouble was segregated from? A. That is right. I took the tool trouble. In other words, I added machine trouble and tool trouble, and the hours run, and took the percentage.

The Master: Well, this tool trouble on the last sheet is attributable to this machine, brass tag number 36848, where it states the motor was disconnected?

A. Yes. You can't very well penalize the machine for that, can you? As I said before, in making my comparison,

I used only the months where all the machines were available, because I thought that would be the fair method. Now, if we add those last three in, it is possible that we might get a different figure. How much difference, I don't know at this time.

The Master: It looks from a rough glance on this that **(1945)** these last 3 weeks the department was having the machines that were giving them the maximum amount of trouble removed. I notice the machines that had the high amount of machine trouble in the preceding weeks seem to have been taken out.

A. In other words, they gave the Rouge plant the worst ones.

Mr. Farley: I suppose the explanation of that would be quite obviously from these sheets they were —I think the survey apparently must have been made to study those machines before sending them to the Rouge plant; this is not evidence; just a conclusion I am making.

The Master: Let us take a brief recess.

(A recess was thereupon taken.)

Q. (By Mr. Farley, continuing): Without going into all of those figures, Mr. Woehrle, just what did the computation you made on that basis, which you just described, show as an output per hour for the machine, figuring 65 per cent efficiency? I believe that is what you did, didn't you? A. I actually didn't go any further than that to get an hourly rate, so many pieces are present. I just used that as a standard of comparison; the normal standard would be 80 percent, but this is only 65. In as much as I had a time study, I thought that would be the more accurate; at least, the one that would be fairer to use, so I used the one that figured about 80 per cent, which is Marentette's time study .86, which is Exhibit 14.

Q. That is, you figured 80 per cent of 65 as shown on this Payne report? A. No.

(1946) Q. I mean just as a check of your own information. A. In other words, I saw the 65 per cent was much less than the normal.

Q. And, you didn't employ that in any of your— A. (Interrupting): No, I didn't.

Q. You just made that computation for, you might say, a check on your own figures? A. That is right.

• • • • •

(1957) Q. (By Mr. Farley): Now, we were discussing, Mr. Woehrle, your computation of the Melling cam lathes, and particularly the figure .86, which you state was based upon the Marentette time study dated October 8, 1924. Did you take into account at the time you made your computations the matter which has been raised by frequent objections by Mr. Spohn since then that this date October 8, 1924 —I think the objection was that it was not within the accounting period? A. Well, I don't think, personally, that it makes any difference whether it is in the accounting period or not; it is the operation of that type of machine under the conditions in department 410, and once you establish that fact, why, it doesn't make any difference. Just suppose an infringement of **(1958)** the patent had been issued on October 1st, 1924, instead of when it was, on June 15, 1925; that shouldn't alter it, the fact that the machine is without the accounting period.

Q. Well, I think I quite agree with you. Now, did you take into consideration at all at that time the length of time the machines had been running? A. I certainly did.

Q. And, did you take into consideration at all the number of shafts which had been produced on the machines in the interim between the purchase of the machine and the time when this time study was taken? A. Yes. I compiled the production, and I know it was producing more shafts at that time—or, by that time.

Q. You heard the testimony of Mr. John Schmidt here, did you not? A. I did.

Q. And, to the effect that he had changed these machines, these Walcott machines over from sody water, I think he said it, to oil. Do any of the records which you have consulted establish the date when that change was made? A. Yes. If you recall, these machinery valuation records kept by the accounting department, and identified by Mr. Missal, you will see that the oil pans or oil fixtures were installed during the summer of 1924.

Q. Could you refer to any one of those records, just for the record here, and just make reference to the type of

record it is, and where you find that? A. On Exhibit Y-27 there is a date of June 24, 1924, which adds a cost of $173.83 to the original cost of the machine, and on the reverse side of this same exhibit the explanation for that (1959) additional cost is this:

"Mill and electric installation cards and oiling system"; so that oiling system that Mr. Schmidt testified about occurred, or was changed, on June 24, 1927, according to the—

Q. (Interposing): A number of the other cards of the same group of Y exhibits show similar items for expense, and dates that run about the same, do they not? A. Yes, Y-28 shows June, 1924.

Q. I don't think it will be necessary to run through all those. A. In fact, Y-29 actually shows June, 1924. It is very specific. That is the mill installation charge.

Mr. Spohn: But, no oiling on that?

A. Apparently not. Y-30 shows June, 1924, and that includes the oiling system. So, I think you can go through all of them and you will find that the oiling systems were put in on June, 1924.

Q. (By Mr. Farley): All right. Now, suppose we go back to your Exhibit C, and I would like to refer you now to sheet 1 of that exhibit. The entire sheet, I understand, is denied or rejected by counsel for the plaintiffs. I will refer you first to your footnotes:

"(a) No cost records are available to show, by separate operations, the comparative power costs, tool costs, scrap losses or other incidental items."

As far as power costs are concerned, you have already stated that that would be a very insignificant sum comparatively? A. That is right.

(1960) Q. And, your testimony has been so far as tool cost was concerned, if the records had been available to show them, it is your opinion they would have shown slight increased cost of the Walcott machines over the shapers, basing that on the testimony? A. The testimony of other witnesses; yes, sir.

Q. And, scrap losses, what do you have to say about that? A. Well, that is a difficult item. I don't know of

any complete record on that. Naturally, a scrap loss would be for the whole department, or the whole 45 or 46 operations of the shaft. I don't think they would cut off at any particular operation. In other words, it would be too much to expect that they recorded every scrap loss on every operation. When they get to the end of the line, why, as you scrap, it is scrap, that is all there is to it.

Q. As a matter of fact, some of your cost summary cards do have some figure in for scrap losses? A. That is right. They do have some percentages for scrap, but you don't have any idea what it is caused by, what operation.

Q. Would you, as an accountant, recommend to the Ford Company that they should keep separate figures for scrap losses on each and every machine? A. No, I wouldn't recommend records. I think the foreman, by ferreting out the trouble, would remedy that before any records would be necessary to show it.

Q. How about your note, "b":

> "(b) The records for the Ford cam shapers, for the period in which these machines were used indicate only three instances of extraordinary repairs for overhauling; the **(1961)** amounts expended are not available."

What have you to say as to the correctness of that notation? A. Well, that statement is still correct. If you refer to the permanent inventory machine tool records, you will find that there are notations on three of the cards to the effect that there were extraordinary repairs on those three indicated machines. However, the amounts are not recorded thereon.

Q. And, now, about your note "c":

> "(c) Expenditures were made in 1928, 1929 and 1930 on 14 Melling cam lathes."

Did you have record evidence available for that? A. Yes. Those were all supported by factory work orders covering the detailed items of expense which were necessary to overhaul, I think, 13 of the Melling lathes.

Q. How about the next part of that, after the semicolon, "* * * the necessity for overhauling resulted principally from the use of the machines on model T-410 produc-

tion." A. Well, the reason I make that statement is this. We had machines in the department from early in 1924, so they operated for the latter part of 1924, 1925, 1926 and 1927; all are model T. In other words, possibly five years of use on the model T. Now, when we get into model A, we only operate some of them a short period before we overhaul them. So, I think that the greater, or almost all of the overhauling was required due to the wear on the production of the model T shafts.

Q. Do I understand, therefore, that you charge the entire cost of that overhauling to model T in this schedule under extraordinary repairs? **(1962)** A. That is right.

Q. Now, assume you had endeavored to split that up proportionately; that is, if you take the number of years the machines had operated, because of the fact you included that all, that expenditure all on model T production, you did not make any charge, as I understand it, on sheet 8 of your exhibit as originally prepared on the new substitute sheet 8 of Exhibit C' for extraordinary repairs? A. That is right. I did not make any charge to model A.

Q. And, how would making an allocation of that extraordinary repair charge of some $23,500 affect the end result, or net result? A. It would not change the loss to a profit in either of the cases. It would reduce the loss on the T somewhat, and increase the loss on the A. In other words, if it is desirable or practical to split that extraordinary repair charge, it probably could be done on a time basis or, perhaps, a production basis, but I don't believe it is material enough to attempt the computation.

Q. And, as far as your note "a" is concerned, that, perhaps, could have been amplified by a statement to the effect that these items would be so insignificant that they would not modify the figures materially one way or the other? A. Yes, in general; except for the tool cost. That might be considered a major item. And I think that has already been covered by Mr. Aptekar's testimony.

The Master: In regard to the shapers, and the question of the extraordinary repairs, isn't it possible that by the **(1963)** time the shapers were replaced with Walcott lathes, they were pretty well worn out, and if they continued to use them, the Ford Company would have to have made an expenditure similar to

that made on the Melling machines when they were used for model A production?

A. Yes, that is entirely true.

The Master: Shouldn't that be taken into consideration?

A. Well, if you remember my computation of depreciation, as these shapers became fully depreciated; in other words, after they had run their span of 10 years more or less—I think we figured ten and one-half—when these shapers were completely depreciated at the end of the ten years I discarded that old shaper, added a new one, and my depreciation computation at the latest available cost, and then continued to figure depreciation on that new cost as though we purchased a new shaper. Then carried that all the way through to the end of the accounting period.

Q. And, the new cost was considerably higher than the sum of the first cost, wasn't it? A. Yes, the figure I used was $5900 cost on the new shapers, whereas earlier we bought some for less than that.

Mr. Spohn: But, later there were some more expensive than that?

A. There were two built during a period of time when the costs were away sky high.

Mr. Spohn: Two were in excess of $10,000?

A. That is right. But, those were unusual, extraordinary. So, I felt that the only fair way to do would be to figure the last **(1964)** available cost. In other words, if we had a cost of $5900 in 1923, it is reasonable to assume we would have approximately the same cost in 1924, a year later.

Q. (By Mr. Farley): Those extraordinary costs of $10,000 or so, they were, if my memory serves me right, just at or around the peak of wartime production, 1917 or 1918, were they not?

Mr. Spohn: The record shows.

Mr. Farley: The record shows, I know.

A. The record shows the date.

Mr. Spohn: December, 1919.

A. Both of them were made in December, 1919, yes. I think that was still pretty high cost then, if I remember rightly; and, the amount of the last machine we purchased, in actual dollars, was $5,895.69, purchased on February 25, 1924. Now—

Mr. Spohn: Is that purchased, or, rather, made by the company itself, Mr. Woehrle?

A. Well, I think Arthur Coulton made those, I think. I am not sure, positively. I have a date of acquisition. That is the date we acquired it, anyway. So, you see, by 1924 the cost of the shaper was about $5900; and, if we added any more, it is reasonable to assume they would be approximately that same cost. In fact, the last four machines we bought in 1923 to 1924 would average $5900; the last four machines we bought. Does that make it clear just why we don't need any extraordinary repairs outside of what we already have?

The Master: Yes. I understand your theory there.

Q. (By Mr. Farley, continuing): You acknowledge, of course, as your sheet 1 clearly shows, a higher depreciation cost on the shapers through the period of time than you did on the Walcott **(1965)** machines? A. Yes. Depreciation expense on the shapers exceeded the depreciation expense on the Melling cam lathe due to the higher cost. That includes those two machines bought at $10,000 apiece, also, by the way. The figures are on the total actual cost. If we bought those machines at any other dates, say, the figures before or the figures later, we would probably have used a cost of around $6,000.

Q. Now, you have inserted a substitute sheet for your sheet—no, your schedule 1, sheet 2 of Exhibit C remains unchanged? A. That is right.

Q. I take it, then, that in your opinion the computations and figures given on those pages are, in your opinion, accurate? A. That is right. You might go all the way over including page 7.

Q. And that same answer would apply to each of these sheets? A. That is right.

Q. And, as to those figures contained in there, they are supported by available records of the Ford Company,

which you consulted? A. Available records or testimony of witnesses preceding being here.

Q. As to those particular computations how many, if any of them, or what portion of them, are supported by records as against those which are supported by testimony, or of testimony? A. I believe with the exception of maintenance repairs based upon the testimony of witnesses to the effect that four men maintained on the Mellings on two shifts, four men each shift, against two men on the shapers, I believe with the exception of those facts, that all other data is based upon records. I may be mistaken, but it is my recollection that I have had records for everything else.

(1966) Q. And, then, those sheets, including the schedule 1, sheet 1, are all supported, with the exception of the maintenance, all supported by available records? A. That is right.

Q. Suppose you had eliminated the maintenance repairs on the basis there was no record to support it, how would that affect the end figure? A. You would still—you would have a reduction in the loss of some six thousand-odd dollars, which would reduce the loss to a sum figure of around $29,000.

Q. Going now to your schedule 2, that has all been supplanted by the Exhibit C' that you introduced last night? A. That is right; C'.

Q. And the same with schedule 3? A. That is right.

Q. I wish you would refer, now, Mr. Woehrle, to sheet 18 of your original schedule 1, or rather, your original Exhibit C; you leave that sheet in its original form, no change has been made? A. No changes.

Q. Now, I notice on my copy that I have marked 2 B and C have been denied or rejected by the plaintiffs. Would you change any of the data given there in view of the rejection of that sheet by the plaintiffs, or do you think it should be changed?

Mr. Spohn: The fact is the witness hasn't changed it.

A. No, I haven't changed it. The fact is that is a determination of the correct standard of comparison to use, I believe, in most cases, and that is a matter which we are attempting to **(1967)** decide in this case, I believe.

I am merely using the standard which counsel for the defendant is contending should be used.

Q. And which I instructed you to use? A. That is right.

Q. Of course, that would be true with respect to the denial or rejection of your paragraph 3. Of course, as to the denial of the latter part of paragraph 4, that is a matter, I suppose, more for the Court to decide, and I assume the denial merely goes with it where it is constructed in accordance with the original drawings of the White Motor Company. But, as to the last sentence there, of your paragraph, "no Ford cam shapers such as used by the defendant Ford Motor Company are in existence in so far as any present knowledge of defendant is concerned," are there any records available which support that statement? A. Yes. The permanent inventory machine tools shows that all of the Ford cam shapers were scrapped, and by that is meant actually disposed of in some way, shape or form in 1925 or 1926.

Q. Now, I think we already discussed your computation of page 19, description and means used in computing schedule 1. You just went over that. And, you have testified concerning this first paragraph on page 20. As to the second paragraph, that was also discussed by you and discussed by Mr. Marentette, the straightening operation. In view of just the general question there, in view of the testimony and the further check it is still your position that that is an accurate **(1968)** statement? A. That is right.

Mr. Spohn: What is an accurate statement?

Mr. Farley: The statements contained in the first four paragraphs of page 20. I think we already have fairly well covered depreciation as you described on pages 20 and 21; also, maintenance and repairs as described on pages 21 and 22; and, as to pages 23 and 24, we will put substitute sheets in for those which you discussed last night.

As to page 25, that is the discussion of depreciation continued from your new page 24 on Ford cam shapers, and I think you pretty well covered that with the discussion you just now had with the Master. The same thing is true with maintenance as covered on pages—the bottom of page 25 and page 26.

Now, as to page 27, that has to do or, rather, you substituted a new sheet for that, did you not?

A. That is right.

Q. And, the same is true with respect to page 28. How about page 29 of the original report; paragraph 7, operation sheets for making the model T are attached to, marked Exhibits 13, 14 and 15.

"(b) Model A cam shafts is attached hereto marked Exhibit 16."

"(c) Tractor cam shafts—is attached hereto marked Exhibit 17."

What have you to say about those statements? A. Well, those statements, as they are there, are true. They are **(1969)** operation sheets, and I don't think the page should be changed at this date. I think testimony has explained in detail the various operation sheets there.

* * * * *

(1976) Q. Well, I don't know whether it was correct or not, but it seemed to me, I had the impression that while you had answered that question correctly according to what the sheet shows, that later on, three or four sentences later, you inadvertently twisted it the other way around. A. Well, if I did, I will repeat and state that the direct labor cost of three operations on the shapers,—and that is column 5,—taking them month by month, in no period do those costs exceed the costs of direct labor on three operations on the Melling cam lathes as set forth in column 8. And whether you take it month by month, year by year, or the total period, would not change that relationship.

Q. Of course, in that respect the sheet fully speaks for itself anyhow? A. That is right. Now, may I make a statement, on page 23, while we are talking about that proration I made back there? I have got another theory on that, if it is permissible to give it. Page 24.

Q. That is on Exhibit C? A. C'.

Q. C', yes. A. You remember when I prepared my first statement of account, Exhibit C, I used a pro-ration method to arrive at the minute cost for shaping the model A shaft on the Ford cam (1977) shaper. And I made that pro-ration on this basis: In other words, it took so many minutes to turn the "T" shaft on the Mellings, Melling cam lathes, and it also took slightly more time to turn the "A" shaft on the Melling machines.

Now, that proportion that it took the Melling machines to turn the "T" shaft as compared with the "A" shaft, I applied that proportion to the shaper operation on the Ford cam shaper, and applied that proportion to the 1.20 minutes, the actual time for shaping the model T cam shafts on the Ford cam shaper. And that comparison method would give me 1.40 minutes for the shaping of the "A" shafts. So you can see that it is not very far off from the figure I actually used here of 1.3755.

Mr. Spohn: Mr. Woehrle, may I have that figure again? 1.4—

A. 40.

Mr. Spohn: 1.440?

A. No, just 1.40.

Mr. Spohn: All right.

Q. (By Mr. Farley): As I understand that statement of yours is that in your Exhibit C you had established a proportionate increased time for the turning of the model A shafts as compared with the model T shafts on the Walcott machine? A. That is right.

Q. And you got that proportionate or percentage increase from those two figures? A. That is right.

Q. And you used that same percentage increase in your first (1978) computation— A. Exhibit C.

Q. —to compare model A shaper operation with model A Walcott machine operation; that is correct, isn't it? A. The "A" shaper with the "T" shaper.

Q. Yes, model A shaper— A. For the "T" shaft. In other words, the increased comparison of the "T" to the "A" on the shaper.

Q. Yes. But you got that proportionate increase from certain figures you had concerning the Walcott machines? A. That is right.

Q. Then you used that same proportionate increase for applying it to the 25 shafts, known 25 shafts per hour on the shaper, and from that got the—really a proportionate decrease, it was, wasn't it? A. Decrease of time; proportionate increase of shafts per hour.

Q. That is the way you figured it in your first computation? A. That is right.

Q. And whereas in the second computation in your Exhibit C', you employed what might be termed the perimeter method, which is used in the computation made by Mr. Pioch in Defendant's Exhibit 264? A. That is right.

Q. And now your statement is that by either of the two methods you get a very close or a comparable result? A. That is right.

Q. Is that right? A. That is right. The approximate difference—I mean the difference is very small.

(1979) Q. What would it amount to in the end figure? A. In dollars and cents?

Q. Yes, dollars and cents. A. Before I changed it, I think it made a difference of some $1500.

Q. Increase or decrease? A. It increased the loss $1500 by using this method.

Q. By using the— A. C' method; the method used in C'.

Q. That is the same general type of method as used by Moise in schedule Z which he prepared? A. Yes, I think that would compare favorably with his periphery method.

Q. Now, I think that about covers all of the material insofar as your Exhibit C and C' is concerned, unless you have further comments or thoughts of anything you think would require any additional explaining. A. I can't think of anything else right now.

Q. You have prepared certain other computations? A. That is right.

Q. Have you not? A. That is right.

* * * * *

(1980) Q. (By Mr. Farley): Now, what, if any other, computations have you prepared, Mr. Woehrle? A. (Witness produces a document.)

Mr. Farley: Mark this an exhibit.

(A document was thereupon marked Exhibit 301 by the reporter.)

Mr. Farley: I don't think I made the offer. The substitute sheets for Exhibit C were marked Exhibit C'. Now, I offer that as Exhibit C'.

The Master: I will admit it.

Mr. Spohn: Will you withhold your ruling on that until **(1981)** such time as we have had an opportunity to cross examine the witness?

The Master: Well, yes, if you want me to.

Q. (By Mr. Farley): Now, in connection with this other or additional computation which you have produced and which has been marked in evidence as Exhibit 301, I think I would like to have a few preliminary questions on that. You were present, Mr. Woehrle, when Mr. Moise testified on behalf of the plaintiffs? A. I was.

Q. And you were furnished with a copy of his Exhibit Z, as well as his Exhibit Z', substitute sheets? A. I was.

Q. Now, will you proceed then to describe the computations that you have in Exhibit 301? A. Referring to the facing sheet or the first sheet under the heading, "Changes made," those changes are the only changes I made in the standards which Mr. Moise used in his original Exhibit Z, or Z'. In other words, I have made the computations in exactly the same manner which Mr. Moise made in his original exhibits, and the only changes I have made are listed here, and I will read them off:

No. 1, substitution of Ford cam shaper as a standard of comparison in place of the Landis grinder for computing "A-6250" and "F-446" cost.

No. 2, addition to the cost of the straightening operation to the turning operation on the Melling cam lathe for all three types of shafts.

And, No. 3, substitution of the Pioch cam mill as the **(1982)** standard of comparison in place of the Landis grinder for computing additional losses "based upon rejection of claims made by defendant, but not substantiated by records supplied."

Q. In connection with that quotation, or, rather, the use of the quotation marks, I note that throughout these pages which you have typed, particularly the page which is marked "Page 1" on this Exhibit 301, that there are a number of places where the text is quoted. Now, in that connection I want to ask you about the note that appears on the first page of your Exhibit 301. A. That note reads as follows: "The reproduction herein of certain text, copied exactly from Plaintiff's Exhibit Z, is not to be taken as an admission of the correctness thereof."

Q. That is, the correctness of the text? A. Yes.

Q. In the original Moise report? A. That is right.

Q. Now, will you proceed to describe this computation? A. Well, I have tried to set it up exactly in the same language and the same form as Exhibit Z and Z'. Now, I think it would be better if we started at page 6, where we show a number of shafts per hour and the method in which we have arrived at the comparative starting figures. And down at the bottom of page 6, referring to the notation, note "A," and that refers to the model T operations on the Ford cam shaper, reads as follows:

> "Based on production of 25 per machine hour, or 50 per man hour (pages 205, 212, 222 and 277 of printed **(1983)** record of appeal)."

Q. Do you have before you the Moise report, Exhibit Z? A. No, but I know what that is about—I think that is the same wording used by Mr. Moise.

Q. In other words, in this sheet 6 you used precisely the same language as contained in Mr. Moise's report under his note A on the corresponding page, page 6 of his? A. That is right. Now, that 25 per machine hour or 50 per man hour is carried up in the body of the schedule of page 6 as .02 man hours per shaft. That happens to be—

Q. The substitute page 6 which is contained in Exhibit C' shows precisely the same language and the same terminology as you have used on this sheet of yours? A. That is right.

Q. And that is true for each one of the notes, A, B, C, D, E and F? A. Except for additions of straightening in cases and differences in computation. And I will set those forth as we go along.

Take B, for instance, that is based on production of 37½ per machine hour, or 75 per man hour, taken from pages 212 and 223 of printed record of appeal.

Q. Just to that point, then, that is exactly the same exhibit as used in Mr. Moise's report? A. That is right.

Q. Then you have added— A. Now, I add ".5 minutes for straightening."

Q. Your note adds "plus .5 minutes for straightening." A. That is right.

Q. Then what else do you include in your note? **(1984)** A. I include the total Exhibit 14 of Defendant's Exhibit C.

Q. Which, in your opinion, substantiates the inclusion of the .5 minutes for straightening? A. .5 minutes for straightening, that is right.

Q. Would it be simpler, then, to take that at that point—I think it probably would; go ahead in your own way. A. Refer to B up in the body of the schedule on page 6, we get a time of .02166 man hours per shaft.

Q. And that B note is in the first figure, rather, appears at the top of the 4th column from the right? A. Yes, under "Melling cam lathe computations."

Q. And under "Man hours"—I see. A. That is right.

Q. And the note B refers to each one of those figures, which are the same there, .02166? A. Yes. Now, the mathematical computation of that is quite simple, and I don't think I will go into that at this time. If there is any question later on how it is figured, why, I will explain.

Q. I think it is better, perhaps, at this instance, to make the record clear on that right now. As I understood the Moise report originally you take sheet 6 of Exhibit Z; in place of the figure .02166, appearing in each of his sheets 6, you have the figure .01333. A. Yes, .01333 is the man hours.

Q. Per shaft. A. Per shaft. Based upon one man operating two machines, turning out 75 shafts.

Q. Which is obtained by dividing 37½ per hour into 60—let me see, how is that? A. Let me—

(1985) Q. All right, you explain that. A. You get 75 shafts per hour, one man operating two machines. One hour divided by 75 gives you .01333 man hours per shaft.

Q. That is right. A. Now, I have added to that time a half a minute for straightening. Now, a half a minute for straightening is .50 minutes, divided by 60 min-

utes, which equals .00833 man hours. Add the two together, that is, add .01333 and .00833, and you get a total of .02166 man hours per shaft. That includes the straightening operation.

Q. Then the figure you get there is the same figure which Mr. Moise pencilled in on his original sheet 6 of Exhibit C, .02166? A. That is right.

Q. All right. A. At the prior proceedings. Now, let's take up notes C and D.

> C. "Based on production of 15.65 per machine hour, or 31.30 per man hour."

You will note this is different from Mr. Moise's report. And that is calculated from "A" above. Now, "A" above is the shaper operation on the model T, "due weight being given to larger area of F-446." And I refer to Plaintiff's Exhibit C, an addition which I have made to Plaintiff's Exhibit C, which is a schedule in Exhibit Z or Z'.

Q. C? A. No, that is in Z or Z'. And I refer to page 12-A attached hereto.

Q. Are you sure you have got those exhibit numbers right there, Z or Z'? A. That is right.

(1986) Mr. Spohn: What is the reference to C, then?

A. It is Exhibit C in Plaintiff's Exhibit Z, which is page 12,—

Q. (By Mr. Farley): Then the notation here should be "See addition to Plaintiff's Exhibit Z," should it not? A. No, Plaintiff's Exhibit C. We are right in this report Z—we are right in the report Z; we are talking about report Z right now. Turn to page 12.

Q. Of this thing you are now on? A. Moise report, page 12. That is Exhibit C.

Q. Oh, I see; yes, that is Exhibit C, forming a part of Plaintiff's Exhibit Z. A. That is right.

Q. I see. A. Quite confusing, but that is true, nevertheless.

Q. I see. All right. A. Let's refer to Plaintiff's Exhibit C, attached to Exhibit Z.

Q. That being page 12 of Exhibit Z? A. Page 12, that is right.

Q. Now, let me see, is there any substitute page? As we are discussing these, we better look. Yes, there is also a substitute page 12, and substitute Exhibit C in the—
A. In Z'.

Q. In Z'. All right. A. I think to save time, let's use Z' altogether.

Q. Where there is a substitute page? A. Where there is a substitute page. Then we won't have to refer to both of them. Now, what I have done in Defendant's Exhibit 301 is merely add another page marked page 12-A. That is the last page in Exhibit 301. And I have referred to the table **(1987)** as "H," since plaintiff ended with the letter "G" on Exhibit Z'.

Q. You have added an additional table? A. I have added an additional table.

Q. Two additional tables, in fact? A. Two additional tables.

Q. All right. A. Now, the table, I referred to in note C on page 6 of Exhibit 301, is table "I," where we convert the production of the model T shafts on the Ford cam shapers to the Model F shafts on the Ford cam shapers; using the same method as set forth in Plaintiff's Exhibit Z or Z', which is the area method. Now, take a look at table "I," and we might as well figure together here. I will read it, as follows:

> "Production of T-410 cam shafts on Ford cam shaper determined to be 25 per hour. Non-turning and turning time would be:
>
> Machining: .72
> 1.68
>
> which is a total of 2.40."

That gives you 25 shafts per hour machining time on the shaper for the model T shaft.

Q. Now, I notice that you have used the expression, "Non-turning and turning time"; where did you get that from? You got that from page 12 of the Moise reports, is that correct? A. That is right. In other words, I copied figure for figure from the schedule C of Exhibit Z, prepared by Mr. Moise. And I have not departed from his method of computation.

Q. That is, assuming the correctness of the Moise method of figuring as taking a White time study as the basis for the non-turning time, you have used precisely the same figure as employed by Mr. **(1988)** Moise, of .72 for handling time, is that right? A. That is right. In other words, I am merely assuming that the figures given in Exhibit Z or Z' are correct. That is an assumption only.

Q. There is no table of this type or comparable to this in the Moise report, because no computation was made therein of the cam shaft shaper, as a basis of comparison for the A-6250 shafts? A. For the F-446 shafts or A-6250.

Q. Yes. A. We are talking about the F-446 now.

Q. Your table I refers to the F-446 shaft? A. That is right.

Q. And your table "H" refers to A-6250 shaft? A. That is right.

Q. Very well. Then I think with that explanation your table is rather self-explanatory, as it gives you, by using the Moise method of calculation, an output of 45.35 shafts per hour, per man hour, for model A production on the shaper? A. That is right.

Q. As shown in table H; and 31.30 shafts per hour for production on model F shafts on the shaper? A. That is right. Those are both man-hours. In other words, one man operating two machines. I might state that the area method used in Mr. Moise's report—referring to page 11, you will note that for the model A—

Q. (Interposing): Page 11 of that Z', or of the original? A. Either one.

Q. All right. **(1989)** A. The area ratios for the T, using T as the base—in other words, 1.00, then using the area increase for the A, which is 1.14640, and the area method for F-446, which is 1.85287, those area ratios have been used in table H and table I, page 12-A of Exhibit 301 about which we were talking.

Q. In other words, you have used, as I understand it, identically the same area ratios as employed by Mr. Moise in his computation? A. That is right. I might state that had I used his periphery method I would have increased the resulting loss of the various shafts affected. So I used the area method, which I think is more conservative.

Now, I think we will refer back to page 6 of Exhibit 301, using in footnote C the 15.65 shafts per man-hour or 31.30 shafts per man-hour as taken from page 12-A. That is on the F-446 shafts.

Now, you will note that that is placed in the body of the schedule on page 6 as .03194 man-hours per shaft.

Q. That is in the 5th column under the main head of "Ford cam shaft shaper" and under the column head "Man-hours per shaft"? A. That is right.

Q. Very well. Proceed. A. Footnote D is based on production of 25 per machine hour or 50 per man-hour, and that is taken from page 256 of printed record of appeal. That is as far as Mr. Moise's report goes, and I have added:

"Plus 1.15 minutes for straightening."

And I refer to Defendant's Exhibit 215, which is a time study **(1990)** for the tractor prepared at the English plant of the Ford Motor Company and identified by Mr. Klopsic in testimony in this proceeding. Now, you will note that D is placed in the body of the page 6, 4th column from the right, and the man-hours per shaft is .03916. Do you believe it necessary for me to show the detailed computations of each of these?

Q. I shouldn't think so. I think we are all familiar with how those various—your Honor remembers how these things were computed?

The Master: Yes.

A. It is merely a mathematical computation. As long as you get your minutes and seconds and hours.

Q. I am sure Mr. Moise can probably understand them. A. Now, footnote E is based on production of 22.68 per machine hour or 45.35 per man-hour, calculated from A above; and that is the T comparison on the shaper, due weight being given to larger area of A-6250. And I again refer to Plaintiff's Exhibit C, attached to Exhibit Z or Z', which is reproduced in Exhibit 301 here as page 12-A. And that is the model A comparison; table H, you will note that the shafts per machine hour are 22.68; shafts per man-hour, 45.35. And those are the identical figures used in footnote E on page 6 of Exhibit 301.

Now, that E note is placed up in the body of page 6 for A production on the shaper, and it is the 5th column

from the left and is .02205. Now, take footnote F, based on production of 34.706 per machine hour or 69.412 per man-hour, **(1991)** calculated from B above; and B above is the operation of the Melling lathe on the T shaft, due weight being given to larger area of A-6250. See Plaintiff's Exhibit C, which is in Exhibit Z', page 12, table E at the top of the page. Those same production figures per hour are given in that table,—or, computed in that table.

Then I have added, "Plus .60 minutes for straightening."

And I refer you to Defendant's further statement of account, which is Exhibit C on page 23—I better refer to our exhibit; further statement of account, Exhibit C', page 23.

Q. Yes. I think you better change that; Exhibit C'. A. Page 23. It is Defendant's further statement of account as amended, which is Exhibit C'. And remember that is the straightening operation for the model A shaft as taken from time study or engineering operation sheet prepared and attached to Exhibit C' as Exhibit No. 18. And that, if you remember, is the so-called Autostroy operation sheet. Now, if you take footnote F for the figures and refer to the bottom of page 6, 4th column from the right, you get the amount of .02441; that is the man-hours per shaft on the Melling cam lathe on the A shaft.

Q. And in all of these you have used the same system as Mr. Moise, of including the full burden rate, have you not? A. That is right.

Q. Now, you have employed the detail figures as obtained on page 6, and employed them in the further computation on what next page? A. Pages 5, 4 and 3 are merely the dollar amounts based upon the **(1992)** figures obtained from page 6. In other words, applying the production number of shafts to the cost of the shaping operation on the Ford cam shapers compared with the cost of turning the cam shafts on the Melling cam lathe, using throughout the exact method of arriving at the annual productive labor figures and the annual overhead figures as prepared by Mr. Moise in his original Exhibit Z.

Q. I assume it is not necessary to go through all the computation and the meaning of the figures on pages 3, 4 and 5 in view of the testimony that has already been

given about the system and Mr. Moise's explanation of his system. So I refer you then to your page 1, for the summation of the figures, using this Moise method, as you might call it. A. On page 1, which is headed "Losses sustained by Ford Motor Company through use of Melling cam lathe for rough-turning cams on cam shafts T-410, A-6250 and F-446, from June 16th, 1925, to date use of these machines was abandoned."

Now, the minimum loss from June 16, 1925, to February 3, 1931, based upon production claimed by defendant or admitted by defendant's employees is $35,921.67, which is the total amount obtained from page 3.

Q. That is the same language as used in page 1 of Mr. Moise's original Z report and his Z-1 report, and I think there is still a Z-2, a substitute page for this, except that you have changed the word "savings" to "losses" as appeared in the heading, the first word; and the second word in the 1st paragraph of your sheet reads, "Minimum loss" instead of "Minimum savings"? **(1993)** A. That is right.

Q. You substituted the word "loss" or "losses" for "saving" or "savings," wherever that appears, but otherwise you have followed the language used by Mr. Moise? A. That is right.

Q. All right. A. In fact, I have quotation marks where the quotations are taken word for word from Mr. Moise's report.

Q. And I think your computations there speak pretty well for themselves, and you get the figure $35,921.00 as your top figure, at the top of the page; and then just explain briefly these other three sums of $644.47 and so on, will you, please? A. The second section of this page is headed up "Additional losses based upon rejection of claims made by defendant but not substantiated by record supplied."

Q. As a matter of recollection, that part of Mr. Moise's report was all based upon the assumption that the sending of the machines to Track 297 did not put them out of production? A. I believe that is right, yes.

Q. And these figures that you obtained, also based on that same assumption, show that instead of any additional gains, if the company had continued to use the machines for that additional period, there would have been a loss of

$644.47 for the period of May 16 to December 30, and then for the period January 1 to February 3 another loss of $257.83, making a total of $902.30; is that right? A. That is right.

• • • • •

(1999) Q. (By Mr. Farley): All right, if you will proceed, Mr. Woehrle, with the description of Exhibit 302? A. The changes made on Exhibit 302 are as follows—in other words, the change made from the Exhibits Z or Z' to the computations made here in Exhibit 302.

The first change, substitution of Ford cam shapers as standard of comparison in place of the Landis grinder for computing A-6250 and F-446 costs.

No. 2, inclusion of the straightening operation in the computation of the costs of machining on Melling cam lathe for all three types of shafts.

3. Substitution of production of 35 model T-410 cam shafts per machine hour on Melling cam lathe in place of 37½ per hour.

Substitution of production of 30 model A-6250 per machine hour on the Melling cam lathe in place of 34.706 per hour.

5. Substitution of production of 14.27 model F-446 cam **(2000)** shafts per machine hour on Melling cam lathe in place of 25 per hour.

6. Substitution of the Pioch cam mill as the standard of comparison in place of the Landis grinder for computing additional losses "based upon rejection of claims made by defendant but not substantiated by records supplied." Then I will refer to the note at the bottom of the page.

Q. That is all as stated on page one of your Exhibit, of the first page of your Exhibit? A. That is on the facing sheet of Exhibit 302.

Q. Yes. A. Also the footnote reads as follows: "The reproduction herein of certain text copied exactly from Plaintiff's Exhibit Z is not to be taken as an admission of the correctness thereof."

Now, I think it would be better to refer back to page 12-A, you will notice that 12-A is identical with page 12-A of Exhibit 301. Page 12-A of Exhibit 302 is identical with page 12-A of Exhibit 301.

Q. All right. A. I used table H and table I on this page,—at least, I present table H and table I. However, for the present computation I have used only table I. In other words, table H may be ignored. I merely put table H in because it had previously been necessary for Exhibit 301. It is, as I said, identical with 12-A of Exhibit 301; hence I don't think it is necessary to go into the method of computation.

Q. That is all right. I suppose next you would prefer to start on page 6. **(2001)** A. Page 6. I think I will show you the difference in page 6; at least, it would be very much clearer. Footnote A on the bottom of page 6, Exhibit 302, reads as follows:

> "Based on production of 25 per machine hour or 50 per man hour (see Exhibit 13 of Defendant's further statement of account)."

Recall that is the copy of the time study copied from Spencer Libby's notebook. That is record evidence and I have used that in place of what Mr. Moise used in his report Exhibit Z' where he says he obtained his record from printed record of appeal, testimony of witnesses.

Q. The figure I have reads the same. A. The figure reads the same.

Q. All right. A. Footnote B, "Based on production of 35 per machine hour or 70 per man-hour, plus 5 minutes for straightening operation."

The Master: .5 minutes?

A. Pardon; .5 minutes. "(See Exhibit 14 of Defendant's further statement of account and Payne report.)" If you remember, that Exhibit 14 is the time study taken in 1924 by Mr. Marentette, and the times are .86 for the turning operation on the lathe and .5 minutes for the straightening operation.

Q. The "Payne report"— A. (Interrupting): We have discussed that.

Q. (Continuing): —is the one that gives 35 shafts per hour? A. 35 and a fraction, yes.

Q. Exhibit 14, however, gives you record evidence concerning the .5 of a minute for the straightening operation? **(2002)** A. Yes.

Q. All right, go ahead. A. Footnote, "Based on production of 15.65 per machine hour or 31.30 per man-hour (calculated from A above)."

That is the model F shaft on the shaper.

"Due weight being given to larger area of F-446. See addition to Plaintiff's Exhibit C which is attached to Exhibit Z and Z', and which is page 12-A of the present Exhibit 302 which we are discussing."

Q. Then that 15.65 is the same thing you discussed when you were discussing Exhibit 301? A. That is right. Same computation based on the area method.

Q. Go ahead. A. Footnote D, "based on production of 14.27 per machine hour or 28.54 per man-hour plus 1.15 minutes for straightening operation (see Defendant's Exhibit 215)," and that exhibit is the operation sheet prepared by the English company of the Ford Motor Company, English branch.

Q. Have you got that handy, Exhibit 215? A. Yes, I think I have.

Mr. Farley: I think, for the purpose of refreshing the Court's recollection, we might let him look at it at this time.

Mr. Spohn: It is 214, isn't it? (Exhibit handed to the Master.)

A. 215 is the Exhibit which Mr. Klopsic identified and explained here in these proceedings some time ago.

Q. All right. A. Footnote E: "Based on production of 21.81 per machine hour or **(2003)** 43.62 per man-hour. See Defendant's further statement of account, page 23, as amended," which is Exhibit C'. Now, that is based upon the computation, using the perimeter method, if you will recall, stepping up the time for the shaping of the model A shaft on the Ford cam shaper, using as the basis Mr. William Pioch's figures or computations of 25.3 seconds for the T cycle on the shaper, as compared with 29 seconds on the A shaft on the shaper. It would figure out to 1.3755 for the turning operation, plus 1.15 minutes for the straightening, gives you the total amount of .02293, which is in the body of page 6, marked E.

Q. .02296? A. No, wait; pardon me.

Q. The sheet I have says .02293 opposite your footnote E. A. Well, that is the number of minutes—in other words, 1.3755 minutes, divided by 60 minutes will give you .02293 hours, man-hours per shaft. There is no straightening operation in there. I was reading from footnote D and in error at that time. So if you have a minute cost of 1.3755, you get an hourly cost of .02293.

Now, let us take footnote F, based on production of 30 per machine hour or 60 per man-hour, plus .60 minutes for straightening.

Q. On the production of 30 machine hours, the production figure on the Melling machine? A. That is on the Melling machine on the A shaft using the source of information the Exhibit 18 attached to Defendant's Exhibit C', which, in other words, is that Autostroy record.

(2004) Q. All right. A. The .60 minutes for straightening is also obtained from that same record, and that is explained in defendant's further statement of account, page 23, as amended, which is Exhibit C'.

Now, with those adjustments applied to the man-hours per shaft, when they are applied to the same direct labor amounts as determined by Mr. Moise in Exhibit Z and Z', and also the same burden percentages as determined in Exhibit Z and Z', you get the dollar amounts as shown on pages 3, 4 and 5, page 3 being the total cost, page 4 being the productive labor cost, and page 5 being the burden cost.

Q. That is all just in the same method of computation as used by Mr. Moise? A. That is right.

Q. All right. Now, will you go to your summarization; I guess that would be next in order. A. Well, page 3 of this Exhibit 302 gives a loss of $64,128.08 for the period from June 15, 1925, to February 3, 1931; that is, June 16, 1925, to February 3, 1931. That is the whole length of our accounting period here. And that amount is carried forward to page 1, under the heading, "Minimum loss from June 16, 1925, to February 3, 1931." Now, the second section of this page 1 is determined similarly to the page 1 of Exhibit 301. In other words, using as a standard of comparison the Pioch machine instead of the Landis grinder when comparing the operations of the Melling cam lathe. In other words, substituted the Pioch machine in place of the grinder, and comparing those amounts with the Melling cam lathes, ascribing 42 shafts an hour to the Pioch ma-

chine. And assuming that when **(2004½)** the first Pioch machine was put on production in May, 1930, May 16th, and figuring to the end of the year, December 31, 1930, we arrived at a loss of $1,224.89 for that period. That is using the same production which was used by Mr. Moise in Exhibit Z′, and I think also used by the defendant in Exhibit C. Then the period from January 1, 1931, to February 3, 1931, gives us a loss of $489.98, and that is based on a production of 36,960 model A shafts.

(2005) Now, that takes us up to the end of the accounting period, February 3, 1931. From that date on, Mr. Moise figured the loss if we had used grinders from that date to July 31, 1931.

In place of the grinder, we have substituted the Pioch machine, and computing from February 4, 1931, to July 31, 1931 we have determined the loss to be $5768.88, due to the fact that we used Melling cam lathes instead of Pioch machines. That is, of course, based on the assumption that we did use the Melling cam lathes. Giving us a grand total loss of $71,607.83.

Q. Is there anything more that you wanted to explain in connection with those sheets? A. No, I believe not.

Mr. Farley: Are they all clear to you, your Honor?
The Master: Yes.

Q. I note, of course, that throughout these exhibits 301 and 302 you have used the full burden rate, and while we discussed that, it seems to me, fairly thoroughly this morning, I was just wondering whether there is any other comment you had to make on that. A. Well, perhaps I should have put a footnote on these Exhibits 301 and 302 to the effect that it was our contention that a total burden figure, burden percentage figure applied to direct labor, is not the correct method to use when you are trying to determine the savings of one machine over the other. In other words, we are here to try to determine the savings, as I understand, from one machine to the other, and if we know beforehand, before we start our computation that certain of the elements of cost would not be required in a savings **(2006)** computation method of any kind—by that I mean, if one washed out against the other—it seems to me there is no need for even trying to arrive at a cost for those various elements. And I tried to explain this morning

that there were numerous cost elements which are included in the overhead, total burden overhead figure, or rate, which I would not consider in making any comparison with one machine with another.

Q. Would you say that the situation here differs in any respect from what might be termed ordinary accounting practice? What I have in mind is this, that generally speaking, if you were put on the job of determining the profits, let us say, of an ordinary merchandising establishment, or even the profits, taken generally, of the Ford Motor Company insofar as they referred to sales of cars, then it would under ordinary accounting practice be necessary to take into account all of these burden rates. A. All of the elements of burden.

Mr. Spohn: Will you read the question back? I didn't get it.

(Question and answer thereupon repeated by the reporter.)

Q. (By Mr. Farley): The question could be asked, as an accountant you can't get profits without taking into consideration burden and inventory and all that sort of thing; I was just wondering whether in that respect you consider the situation in the inquiry you are here directed to make is any different in that respect than what you might ordinarily be confronted with as an accountant? A. Vastly different, yes.

* * * * *

(2028) WILLIAM F. PIOCH was thereupon recalled as a witness on behalf of the Defendant herein, and having been previously duly sworn, testified further as follows:

RE-DIRECT EXAMINATION by Mr. Farley.

Q. You are the same Mr. Pioch who testified here before? A. Yes, sir.

* * * * *

(2029) Q. We had Mr. Weyl, of Mr. Shelldrick's department on the stand here a couple of days ago, and he produced this drawing which is marked in evidence as Exhibit 297 (indicating), and you recognize that as a Ford Company drawing. A. I do.

Q. Now, are you familiar with the engineering information cards of the Ford Company? I show you engineering information cards for the A-6250 finish drawings, which are in evidence as Exhibit 292 (handing document to witness), and at the same time I would like to call your attention to the note, engineering information No. 1077, of July 6, 1927, "Two intermediate bearings added," and then the further one on 9/28/29, "Remove second and fourth bearings."

Now, the Exhibit 2 attached to Exhibit A in this matter, if you look at that print that is also a print of the A-6250 shaft, and if you look at that print very closely you can see the outline of the intermediate bearings referred to in the engineering information; is that correct (indicating)? A. Yes, sir.

Q. Now, Mr. Weyl's drawings, or, rather, the drawing which Mr. Weyl produced, he was asked some questions about the matter of removing a quarter of an inch from the end bearings in the manner you had testified about when you were on the stand, and he produced this drawing with the crayon to indicate that construction. I would like to ask you whether or not that would be any departure from the practice you have described as being followed at the Ford Company? A. It would not.

Q. Would you say your records in any way support that? Do you **(2030)** understand what I mean? A. I don't believe I do.

Q. Well, referring to the engineering information, Exhibit 292, the one 1077 shows what? A. Bearings added.

Q. That you did actually add bearings, make a change in the bearings of the model A construction? A. Then we removed them about a year later, and that procedure would be no different than if we had cut the length of the bearings.

* * * * *

(2031) Q. Now, in connection with this proposition of assuming the type of shaft and the design of the shaft as indicated by the crayon in Exhibit 297, would you please tell the Court whether or not that would in any way modify or affect—increase the cost of production to use the intermediate bearings as shown there? A. No, it would not increase the production cost.

Q. As a matter of fact, the Ford Motor Company actually did use that type of construction for well over a year? A. For about a year.

Q. Just on that point, so there can be no misinterpretation, does the mere inclusion of this note on the engineering information indicate or prove that these bearings actually were added and were actually used in the Ford production? A. The record states exactly what happened.

(2032) Q. And, will you state whether or not that was merely experimental? A. No, I don't believe it was.

Q. The fact that the note above shows the part was released for production, would that in any way influence the matter as to whether or not it was an experimental proposition? A. No, sir.

Q. Once the part is released for production, then the engineering information shows it was released for production, then every change noted on the card shows that change was made as a production matter, does it not? A. Yes, sir.

Q. Unless somewhere along the cards you find that the— A. (Interrupting): It might have been just an engineering—that is, an engineering specification like here is one made on 11/17/27, No. 4930, it says, "Drawing retraced."

Q. Yes? A. A record of that kind would not affect in any way the production. That is just an engineering change; purely engineering.

Q. Now, you can tell—what I was going to continue on with—that these engineering information cards indicate the time when production ceased and the part is changed to repair, does it not? A. Yes, that should show.

Q. I call your attention to— A. (Interrupting): No, this record does not show the method we use when a part goes out of use, and we hold it for repairs. (2033) Usually an "R" is added to the first letter. It would show on the record, "A. R."

Q. Yes. It should be on there, but it isn't? A. It is not on there.

Q. Well, you know as a matter of personal knowledge that throughout those years Model A was actually in production? A. Yes, sir.

Q. That, if a change of that type is shown in the engineering information, that it continued as a part of regular

production from this date in the summer of 1927 until, I think it was removed in the latter part of 1928? A. The record shows exactly what happened in that period.

Q. I was asked by counsel for the plaintiff last night to inquire of you this morning how long the Ford Company has used conveyors in the camshaft department; that is, not only the present cam shaft department, in the River Rouge plant, but also whether the conveyors were used at Highland Park. A. Well, they used conveyors in the cam shaft department in Highland Park. I can't tell you what date that is.

Q. Does it go back of 1924, would you say? A. Well, that is about the time—it was right shortly after that, I believe, they moved to the Rouge plant.

Q. Well, you are correct in your recollection. The records here show the cam shaft department, at least these machines, were moved in November, 1924, from the Highland Park to the Rouge. Do you know of your own knowledge when the cam shaft department was moved to the Rouge that the conveyor equipment was put in there? **(2034)** A. There were conveyors being used.

Q. And also had been in use in Highland Park? A. Yes, sir.

* * * * *

(2035) Q. (By Mr. Farley): I think there was some confusion, Mr. Pioch, in connection with this model A. I think at one point in your cross examination you and counsel were talking at cross-purposes concerning the moving of the attachment on the front of the machine outwardly at the end of the operation. A. You are referring to the shaper?

Q. Yes. A. Yes.

Q. For loading purposes. And, there was some testimony as to whether or not that would add to the over-all machine time of the job.

Mr. Spohn: Your Honor please, we have the witness' testimony on that question.

The Master: I don't see why we should go into that again. It was quite thoroughly covered at the time, I think.

Mr. Farley: Well, I was just wondering whether the impression was gained by your Honor because of

that outward movement at the end of the operation of the machine there would **(2036)** be an increase in the cycle.

The Master: Well, go ahead and ask the question and clear it up.

A. I believe I testified it might add a second onto the operation. That is, the added attachment would move out at the same time that the upper head would move up. I said it might take a second more; I wasn't sure.

Q. (By Mr. Farley, continuing): I wish you would explain to the Court how the original shaper worked after the cam shaft was completed. I mean by that, were the tools— A. (Interrupting): The tools that—after they finished their operation, were on a head, and that head, after the tools stopped, would move up.

Q. That is, were raised— A. (Interrupting): Oh, I would say as far as I can remember, maybe 2½ or 3 inches.

Q. And— A. And, the added attachment would have to move at the same time about the same distance to get the work piece out.

Q. And, it would move in synchronism with the other —that is, in the original shaper there was a time interval of probably a second, or whatever it might be—I guess it would be less than a second for those tools to move up? A. Correct.

Q. To clear for unloading purposes? A. That is right.

Q. And your attachment, you would contemplate having the attachment moved outwardly for loading purposes during the same time interval that the other tools were going up? **(2037)** A. That is correct.

Mr. Farley: That is all. You may cross examine.

Re-Cross Examination by Mr. Michael.

Q. Mr. Pioch, was the raising of the tools in the old shaper performed by hand, or was it automatic? A. No, sir, not when the machine was in operation. It was automatic.

Q. It was automatic? A. Yes, sir.

Q. And, to pull the two front tools on this attachment you speak of out simultaneously with the raising of the

upper tools would involve some kind of mechanism so that they both operated at the same time? A. That is correct.

Q. Does the engineering information card show why these bearings were added that you have been speaking of— A. (Interrupting): I don't believe it does.

Q. (Continuing): —the shaft A? A. (Examining document): No, it does not.

Q. Do you know why they were added? A. I do not.

Q. Does it show the longitudinal extent of each of the added bearings on the engineering information card? A. Yes, sir.

Q. Here is the other drawing Mr. Farley showed you, Exhibit 2 attached to Exhibit A, in which you said you could note the **(2038)** bearings sketched in. This is also a drawing in the case? A. Yes, sir.

Q. Do you see the bearings sketched in on this shaft? A. I can see this one very faintly. This line right around in here (indicating).

Q. Do you see the other? A. On the other one, well, you can see part of it.

Q. They are of much greater longitudinal extent, each of them, in this Exhibit A than as shown in red on this Exhibit 292, aren't they? A. Yes, sir. I would say they are about three-eighths of an inch longer.

Q. Would you say that the bearings shown in red on Exhibit 292 were of sufficient longitudinal extent? A. I believe so.

Q. But, when you actually added them they were— A. (Interrupting): I say I believe they are shown in there long enough, because to prove that we entirely removed those bearings later on.

Q. But, when you added them they were considerably of greater longitudinal extent? A. That is right.

Q. Than the one shown in red on Exhibit 292? A. But, the company found out they were superfluous and took them off entirely.

Q. You have no idea why they were put on? A. I have not.

Q. You wouldn't be able to venture even an opinion on it? A. No, sir.

(2039) Q. When they put them on did they shorten up either of the center bearings or the two end bearings? A. I couldn't say.

Q. Could you tell from the card? A. From the record it would show.

Q. I wish you would look to see. A. I will have to read through it. (Examining card.) The record does not show any changes made on the length of the bearing from the time they were added until the time they were removed.

Q. You mean the information cards? A. Yes, sir, Exhibit 292.

Q. Then, I have been referring to the wrong exhibit designation. That should be Exhibit 297 instead of Exhibit 292. A. (Examining documents): Here is a change on the length of the front bearing dated 2/6/29, information number 11934, telling that they changed length of front bearing from 1-25/32 to 1-13/16; that is the only change referred to changing the length. In other words, they changed the length to—they lengthened it 1/32 of an inch.

Q. They lengthened the front bearing? A. Yes, sir.

Q. 1/32 of an inch? A. Yes, sir.

Q. Did they ever depart from that after that change was made? A. I can tell you by reading the rest of the record (examining document). It was not changed again.

Q. Then, when these additional bearings were added intermediate the center bearing and end bearings, there was no shortening of **(2040)** either of the end bearings or the center bearings? A. No, sir.

Q. On the contrary, the front end bearing was lengthened? A. 1/32 of an inch.

Q. And when these intermediate bearings were added, they would have provided just that much additional bearing surface for that shaft, isn't that true? A. That is what the added bearings would do; yes, sir.

Q. Now, I think you said the addition of the bearings would add nothing to the production cost, is that true? A. That is right.

Q. What do you base that on? Wouldn't it require some machining operations? A. No, sir; no extra operations, just extra tools.

Q. Well, extra tools. You would have at least the expense of the extra tools? A. Extra tools, that is right.

Q. And the extra grinding wheels, or the extra wheel on the grind wheels? A. There is no grinding on this operation.

Q. Wouldn't there be a grinding of these bearings that you added? A. Oh, I see, yes; the finish operation.

Q. And, wouldn't it necessitate including bushings or bearing numbers in the motor block? A. Not necessarily.

Q. What would these additional bearings ride in when the shaft was mounted in the motor? A. You mean whether the motor had bearings in there or not, I **(2041)** couldn't say. I know at one time I believe they ran the cam shaft bearing in just the plain cast-iron bearings. Whether this model A had bushings in there, I don't remember.

Q. Well, it wouldn't be very good engineering practice not to rotate these additional bearings in bushings, would it? A. Oh, that would be all right.

Q. Well, assuming you had no bushings, then you would at least have to have—what would you call the members you would have to cast into the motor block in order to contact these bearings?

Mr. Farley: Bosses.

A. Bosses.

Q. (By Mr. Michael, continuing): You would have to do that? A. That is all on the one cast.

Q. You would have to change your patterns? A. Oh, yes; sure.

Q. To get it in there? A. Sure.

Q. And the openings in the bushings would have to be machined in some way? A. Yes, the bore; you would have to have two extra tools in the boring bar. But, I was thinking of the machining time. It would take no more machining time, that is production time. You would still get the same number of pieces per hour.

Q. With whatever tools were necessary to add to take care of the additional bearings? A. That is correct.

Q. And, if you had bushings in the bosses you would have the job of making the bushings? **(2042)** A. If we would have had, that is correct.

Q. Do you think you would have? A. I don't know.

Q. Do you know why the bearings were later taken off? A. I couldn't say.

Q. When the bearings were taken off—I mean the added intermediate bearings—was there any change in the dimensions of the center bearings and end bearings? A. The record doesn't show it; just only the one which we re-

ferred to about the length being lengthened on the front bearing 1/32 of an inch.

Q. Now, the mere addition of the intermediate bearings would not have enabled you to machine the cams on the model A shaft in the Ford shaper as used by the Ford Company, would it? A. Not as used, but, we would have been able to machine it in the shaper with the length shown in red on Exhibit 297.

Q. How would you have avoided the interference with the center bearing and the end bearings? I am speaking now of the shaper as actually used by the Ford Company. A. We couldn't have machined it as actually used, no.

Q. Then, the addition of these bearings, then— A. (Interrupting): That would have involved a change in the shaper.

* * * * *

(2044) Re-Direct Examination by Mr. Farley.

Q. Recalling your testimony when you were on the stand before, as I recall it, you stated that if you wanted to use the shaper without any change, without putting this front slide attachment on on the model A shaft, you could have merely cut one-quarter of an inch off two of the bearings? A. That is correct.

Q. And, you computed an increase in the diameter to give you the **(2045)** same bearing area? A. That is correct.

Q. That was the purpose of your computation? A. Yes, sir.

Q. Now, if you had cut the quarter of an inch off, knowing the use of these intermediate bearings, instead of increasing the diameter you could have supplanted or kept your same bearing surface by the use of the intermediate bearings? A. That is correct.

Q. Assuming you used the intermediate bearings as shown in this print which indicates just an increase of bearing area substantially equal to the amount cut off the other bearings, will you state whether there would still be sufficient room— A. (Interrupting): With the end of the bearings shown in red in Exhibit 297, we would have been able to use the shaper because they are so shortened that

the tools would be able to get down in there without increasing the bearing diameter.

Q. Do you know whether or not you are using on this question of bushing—do you know whether or not you are using any bushings on the cam shaft of the present jobs? A. We do.

Q. On the cam shaft? A. On the cam shaft? No, we press the bushings in the block; in the 8-cylinder engine, V-8.

Q. How long have you been using the bushings on the job, do you know? A. On the V-8 since they started it.

Q. Since they started it? **(2046)** A. I am not sure about the four-cylinder engine. I believe they ran in cast-iron.

* * * * *

(2048) Re-Direct Examination by Mr. Farley.

Q. During the brief recess, Mr. Pioch, have you consulted any Ford Company records to refresh your recollection concerning the matters as to whether or not any bushings were used in the engine block of the model A for the crank shaft bearings to rotate in? A. Well, referring to the Ford Motor Company parts price list for model A and AA in their list of parts it does not show any cam shaft bearing, which I stated before I wasn't sure whether they used one or not. But, the record here shows they did not use a cam shaft bearing.

Q. And, does that refresh your recollection on the matter—I mean, does that now jibe with your own recollection, after refreshing your recollection by looking at the parts price list? A. It does.

Q. As a matter of fact, you just told me you were pretty sure they didn't use it when you were on the stand before, but now that you have checked you see there is none, and you have referred to page 15, which shows the engine? A. Engine and engine assembly, and page 16 which shows the cam **(2049)** shaft and crank shaft parts, and page 17 which shows crank shaft and cam shaft parts.

Q. And all of the parts, if there were a bushing used, it would be shown in the section of disconnected parts at the top of page 17, or would appear in the engine block, is that right? A. That is correct.

Q. And would be noted with a part number? A. That is correct.

Mr. Farley: Well, I will offer in evidence the parts price list, pages 15, 16 and 17.

(The document above-referred to was thereupon marked Defendant's Exhibit 304 by the reporter.)

Q. One other question on this matter of extra tools that Mr. Michael was questioning you about that would be used. What would you say the added cost of those would be, say, per year, as a result of the use of the intermediate bearings? A. Oh, say, $250.

Mr. Farley: That is all.

The Master: What about the finish grinding operation, doesn't the grinder just grind one bearing and—

A. (Interrupting): Yes.

The Master: So, that would take some extra time?

A. It would add on the grinding time; yes, sir.

(2050) Re-Cross Examination by Mr. Michael.

Q. Mr. Pioch, I notice the date of those parts price list is February 1, 1931. The bearings were added in 1927? A. Let me see that.

Q. Would that change your testimony at all? A. I don't believe so. I believe I can clear up. The record shows 1927, and the complete record does not show of any separate bearings being on there, and the fact that this parts price list is 1931, if they had had trouble with bearings, this price list being of a later date, would certainly show they had to put bearings in there.

Mr. Farley: Just refer to the pages which you are discussing.

A. Do you see what I mean?

Mr. Michael: Not exactly, no.

Mr. Farley: Does the parts price list show dates with the various models on them?

A. If our engineering information, Exhibit 292—we are talking of the date 7/6/27.

Mr. Michael: When the bearings were added.

A. Yes.

(Continuing): —is much earlier than the parts price list, 1932. Had they added a separate bearing, this parts price list would show it on here, because it is of a later date.

Q. (By Mr. Michael, continuing): Does the parts price list show the cam shaft with the two added bearings? A. It does. Wait a minute, though—yes, it does.

Q. You are referring to the cut in the upper left-hand corner of **(2051)** page 17? A. That is correct. Marked A-6250-A.

Q. And, that cut you say, does show the bearings intermediate the center bearing and the end bearings? A. That is correct.

Q. Now, if you actually used bushings, and they were pressed in the cast bosses of the engine block, would they be listed? A. Yes, they would be listed in here. So, they did not use a separate pressed-in bushing. You see here, isn't that the engine assembly list (indicating)? Here is your crank shaft and cam shaft.

Q. Different bushings for the end bearings in the model A cam shaft? A. The record doesn't show it.

Q. They also rode just in the cast-iron bosses? A. Yes, sir; in the cast-iron bosses.

Q. And the center bearing also? A. Yes, sir, all the bearings.

Q. Now, I notice on this information card, No. 1 of Exhibit 292, relating to the A shaft, under the same date that you added the intermediate bearings, you also enlarged the end bearing, the rear end bearing, isn't that true? A. The record says: "Rear bearing enlarged from .872-.873 to 1.559-1.560 diameter."

Q. And, with no reduction in the longitudinal extent in the bearing? A. That is right.

Q. Then, under date of 9/28/28, the second and forth, or the intermediate bearings, were removed? **(2052)** A. That is correct.

Q. And, just a few months later, under date of 2/6/29, you increased the length of the front bearing? A. Yes, sir.

Q. So that after the intermediate bearings, the second and fourth bearings were removed, you were using a cam shaft model A which had front and rear bearings enlarged, one lengthened and the other enlarged without a change in length, as compared with the shaft as you used it before you added the intermediate bearings? A. That is correct.

Mr. Michael: That is all.

RE-DIRECT EXAMINATION by Mr. Farley.

Q. That also brings out another very interesting matter that I hadn't noticed before. On the engineering information card 1077, apparently the dimension of the rear bearing of the model A, originally .872 to .873, that is 7/8 of an inch, is it not? A. That is correct.

Q. So that, when you first started your model A production, considering that your rear bearing was 7/8 of an inch in diameter, see, that meant that this was only 7/8 of an inch (indicating)? A. That is correct.

Q. How does that compare with the bearing on the model T shaft in the size of the cams? **(2053)** A. I believe the model T was very nearly that diameter; that is, about 7/8.

Q. In other words, on the first part of the production of the model A this was only 7/8 of an inch diameter, and, therefore, would be less than the diameter of the cams, and wouldn't make any interference as far as that bearing is concerned? A. It appears so.

Q. In the shaper tool? A. It appears so.

Mr. Farley: That is all.

RE-CROSS EXAMINATION by Mr. Michael.

Q. Is that your recollection now, Mr. Pioch? A. I am only taking it off from the record, Mr. Michael.

Q. You have no independent recollection? A. No, sir.

RE-DIRECT EXAMINATION by Mr. Farley.

Q. On that point the record sort of speaks for itself, but in view of the questioning of Mr. Michael, I call your attention to the fact that this parts price list of the Ford Motor Company will list the parts and the years for which the part is in use, for example, A-6250-A cam shaft, in the

third column on the page it gives 1928-31? A. That means from 1928 to 1931.

Q. Yes. So the record, even though printed in 1931, covers all A parts in construction back to 1928 when the model A started? **(2054)** A. That is correct.

Q. And, the record shows that on its face? A. Yes, sir.

RE-CROSS EXAMINATION by Mr. Michael.

Q. Mr. Pioch, the rear bearing on the A shaft, regardless of what it was or may have been, could have offered no interference with the shaper operation? A. I don't believe so; no.

Mr. Michael: That is all.

RE-DIRECT EXAMINATION by Mr. Farley.

Q. Suppose you turn the shaft end for end? Do you see what I mean? The question has been raised, and it is the position that because of the size of the bearings and the spacing of the bearings they couldn't, the shafts could not be machined in the cam shaft shaper without modification. Now, if the shaft, considering the shaft as originally constructed, but with the shaft traveling under the shaper tool as it did, you know, if you put the same end of the shaft in the shaper as was used in model T, then the two bearings which would form an obstruction would be the front bearing and the center bearing? A. That is correct.

Q. Now, if one wanted to use the shaper, and they still employed the small rear bearing as shown in the engineering information card, Exhibit 292, would it have been a very difficult mechanical **(2055)** expedient to take and turn the shaft around end for end, and have it in this way, and then cut off a little piece of the center bearing? Do you see what I mean? A. No. We would have to change the machine to take care of that modification. There wouldn't have been any difficulty about that.

Q. That would simply mean fixing your collets in accordance with the end for end movement of the shaft? A. That is right.

Mr. Farley: That is all.

Re-Cross Examination by Mr. Michael.

Q. It would really amount to reversing the head and tail stock of the machine? A. Yes, we would have had to take the chuck that drives the shaft, and turned it—taken that chuck and put it from the left-hand side to the right-hand side.

Mr. Farley: That would be a tremendously difficult undertaking, wouldn't it?

A. I don't believe so.

Q. (By Mr. Michael): You never undertook to do it, did you? A. No, we never did.

Q. And, you would still have the interference with the center bearing? A. Yes, sir.

* * * * *

(2056) Mr. Farley: I will offer these Exhibits 303 and 304 in evidence.

The Master: I will admit Defendant's Exhibits 303 and 304 in evidence.

Mr. Farley: Mr. Woehrle, will you resume the stand.

Harold M. Woehrle thereupon resumed the stand as a witness on behalf of the Defendant herein, and having been previously duly sworn, testified as follows:

Re-Direct Examination (Continued) by Mr. Farley.

Q. I think you had still another computation which you hadn't completed before you left the stand last night, a discussion which you hadn't completed, is that right, Mr. Woehrle? A. It hadn't been typed last night (producing document).

Mr. Farley: Well, I will offer the computation produced by the witness as Exhibit 305.

(The document above-referred to was thereupon marked Defendant's Exhibit 305 by the reporter.)

The Master: You better have him explain it first.

Q. Will you explain this computation, Exhibit 305?
(2057) A. Exhibit 305 is a computation of the direct

labor cost on the Melling cam lathe as compared with the direct labor cost on the Ford cam shapers when machining the F-446 cam shaft.

It covers a period from June 16, 1925, to March 31, 1928, the accounting period, during which the F-446 shafts were machined in this country. After March, 1928, they were machined in Cork, Ireland.

Now, the summary of direct labor cost shows that the direct labor on the Melling cam lathes was $12,925.31. And, the direct labor cost on the Ford cam shapers was $7,259.33; the difference being a loss amounting to $5,-665.98.

I might explain the method used in this computation. The basis for the turning operation on the Melling cam lathe is Defendant's Exhibit 215, which is the operation sheet prepared by the English branch of the Ford Motor Company, or English company; and, that operation is No. 13. It is to turn 8 cams 2.1016 minutes. Added to that turning operation is a straightening operation, No. 9, which is 1.15 minutes. The two together equal 3.2516 minutes per man, and that amount is used on page 2 of this schedule at the top of column—the third column from the right.

Hours required for two operations on the Melling cam lathe, that is production multiplied by 3.2516 minutes or by .05419 hours. Now, the amount of the turning time for the Ford cam shaper is determined from Defendant's Exhibit 295, which you recall is Mr. Pioch's computation of the cycle of the shaper, comparing the cycle of the F shaft with the cycle of the T shaft. The cycle of the T shaft was 25.3 seconds, while one cycle on the F-446 shaft was 38.5 seconds.

(2058) Now, applying that proportionate increase in time to the known time for shaping model T shafts, which is 1.20, you arrive at a result of 1.8261 minutes per man, and that amount is carried forward to the schedule, page 2 of column 3, where it is stated that the Ford cam shapers, hours required for two operations, production multiplied by 1.8261 minutes, or by .030435 hours. I might say at this point that the comparison of the weights, or the comparison made by Mr. Rauser's experience in the handling time of the F shaft, compared with the T shaft shows that the handling time and the machining time varied in approximately the same proportions.

I have those percentages figured, and I think I better give them to you.

The increased machining time, that is the increase of the F-446 machining time over the T-410 machining time is approximately 56 per cent. Whereas, the handling time is approximately 52 per cent. That is comparing the larger F shaft with the smaller T shaft.

Q. I understand by that you mean that the increase in the handling time, taken at the ratio that you have used at your computation, Exhibit 305, is the one that is 56 per cent, is that right? A. I have used approximately the 56 per cent increase; that is for machine time and handling time. Whereas, Mr. Rauser's computation shows that handling time would have increased approximately 52 per cent. The difference is immaterial.

The Master: I wonder if there might not also be an increase in handling time because of the fact there would be **(2059)** only one or two machines used on the tractor cam shaft, and there wouldn't be as much opportunity for supervision and observation on that one machine as where you have a battery of 10 or 12 machines. It seems to me there would be more likely to be an inefficiency of the handling of the tractor cam shaft than the model T cam shaft for that reason.

A. In other words, you think because you haven't got another man alongside of him to compare his production, he might lag, is that the idea?

The Master: Yes. And if you put, or if the man was doing the job quits, or is fired, and you have to put a new man on, you will have to educate him pretty much from scratch; whereas, if you have a battery of machines, you will have enough men, or at least a new man won't affect the production on 10 or 12 machines to anything like it would on one. Isn't it your experience as an accountant, that where you have a large amount of production, you have a consequent more efficiency in operations other than operations of the machines themselves?

A. Well, I think there is a place where you can get less efficiency by more operators. In other words, it might get out of hand. I think there is a happy medium there

some place. I don't believe you can say definitely one way or another. I think there is a human element there, and also the supervision that is there. If you have a pretty tough supervisor or straw boss, I think you are going to get the same results out of the machines, or the men, regardless of the number.

The Master: If you take a blacksmith, for example, in a blacksmith shop where there isn't any specialization, and **(2060)** he is turning his attention to all different kinds of tasks during the day, he is going to make a lot of waste movements of his hand as compared with both his hands and his feet, and there is going to be a great deal of waste motion as compared with—

Mr. Farley (Interposing): A fellow on one of the production lines in the Ford Motor Company.

The Master: Yes. If you go to that extreme.

A. Specialization does increase efficiency; there is no doubt of that.

Q. (By Mr. Farley): In any event, Mr. Woehrle, so far as that production factor—that is, high production versus low production is concerned, it would apply equally to the same production whether that production was production on the shaper or production on the Walcott machines, don't you think so? A. I think so. In other words, you are going to have two machines—

The Master: That would probably be true, but it is probably taken into consideration in the Walcott machine because there you have a direct time study that was made which would reveal those lost motions; or, at least, those lost motions, or lack of efficiency, that you might have with the higher production, is directly accounted for; whereas, where you are taking a shaper operation on a cam shaft, which is in high production, and making a direct proportionate translation to the shaper operation and cam shaft, only a few of which are being produced, you don't take that into consideration.

(2061) A. Yes, sir, your Honor, if we would make a computation based on just a proportionate method. In other words, take a T shaft turned on the Walcotts, and

F shaft, and compare the relative increase in time, I think you will arrive at the same difference we have here. Add that on the T shaft, you remember, and it proves out practically the same. I don't believe I have got a computation on the F shaft just on that point.

Q. (By Mr. Farley, continuing): Where is that computation on the T shaft that you have reference to? Is it in any of those exhibits? A. No. I testified yesterday that I had—yes, in Exhibit C there is a similar computation; before we changed to C'.

Q. You made reference to that just for the purpose of the record? A. Of course, we have changed several other factors since C was prepared, so that the comparison isn't in line with the facts now. But, the method is the same.

On page 24 of Exhibit C, the paragraph about in the middle of the page reads as follows:

> "The time of 1.67 minutes for shaping cams on Ford cam shapers compared with 1.20 minutes, for turning cams on Melling cam lathes was determined by applying to the known 1.20 minutes for Melling cam lathes the same proportionate difference that prevailed in the T-410 comparison. That is, .86 minutes for turning T-410 cam shafts on Melling cam lathes compared with 1.20 minutes for shaping T-410 cam shafts on Ford cam shapers."

Now, that comparison method, you recall, we have in C', the perimeter method using Mr. Pioch's figures, and we get **(2062)** 1.3755 minutes for shaping the A shafts in place of that 1.67 minutes on page 24 of Exhibit C.

Now, in place of the 1.20 minutes for shaping T-410 cam shafts—pardon me, I mean the known 1.20 minutes for Melling cam lathes, that would be 25 an hour we use in our Exhibit C here—I have since changed that to 30 shafts an hour, which would be 1 minute even.

Now, if we apply the proportionate increase to the one minute we get for the shaping operation on the model A shaft 1.40 minutes instead of the amount that I have used in C' of 1.3755. It is an immaterial difference, you see. That is the method used in comparing the model T and the A shaft.

Now, we could use the same method in comparing the model T with the model A on the Melling, and then compare that to the shaper and get about the same results.

Q. Let me ask you this, Mr. Woehrle, as I find it here on page 17, whether this present new computation or, rather, more detailed computation, Exhibit 305, relates solely to the F-446 shafts, and in that connection whether the Ford cam shapers was the standard of comparison? A. That is right.

Q. Does this new Exhibit 305 change the result particularly, or is it just simply a more detailed computation? A. It is a more detailed computation. It is just a separate computation to give another method of computing the F-446 shaft in addition to the one I have already presented in Exhibit C', page 17.

(2063) Q. You have already on this Exhibit C', page 17, made a computation and a comparison, or rather, a computation based on the use of the Westinghouse machines as a standard of comparison for the F-446 shaft, too, have you not? A. Yes, a comparative method; yes. Now, is it clear to everyone how we figure on page 2? I think the system is the same as we have always followed in our previous schedules.

Q. Yes. Page 2 is quite readily understandable, it seems to me, in view of the other explanations you have given of your other computations. This page will give, of course, the comparison on the month to month basis throughout the entire infringing period? A. That is right. I might state that had we had sufficient time, we might have worked up some direct labor rates for the department in which the F-446 shaft was actually machined. However, we have used the direct labor rate for the department 410 following the same practice which Mr. Moise did in his Exhibit Z and Z'.

Q. And this, of course, you have not included this burden figure in Exhibit 305 at all? A. No, there is no burden in Exhibit 305.

Q. Well, naturally, any change in the productive labor rate wouldn't change the comparison in so far as profit or loss is concerned? A. No, because you use the same direct labor rate for each machine, both the Ford cam shapers and the Melling cam lathes; month to month the rate is the same.

Mr. Farley: I think that is all. You may cross examine.

* * * * *

(2064) Re-Cross Examination by Mr. Spohn.

* * * * *

(2076) Q. I understood you to say, referring to burden, that you called up Mr. Hovis, I think you said the night before last, which would be Thursday night. Is that when you called Mr. Hovis? A. I called him 8:30 Friday morning.

Q. You called him 8:30 Friday morning? A. Yes.

Q. And he gave you this list of 30 or 31 accounts? A. Yes.

Q. Is that the first time you talked to Mr. Hovis on burden? A. Just directly on that angle, yes; that is right.

Q. What you wanted there was a list of account numbers going in to make up their burden figures? A. That is right.

Q. And, as I understand, they gave you their current list, did they not? A. That apparently is their current list, because it has Social Security tax on.

Q. And, you don't know anything about any prior lists being in (2077) existence? A. Well, I think we can get a list for almost any date you need.

Q. You haven't any breakdown by amounts, do you? The testimony is here there is no breakdown. A. I am not so sure of that. I think it possibly could be broken down by amounts. I am not positive of that.

Q. Mr. Hovis said it couldn't be. You have never seen any breakdown, have you? A. No. Give me time and I might get one, though.

Q. Do you know whether there is any breakdown by classification of departments for those years? A. No, I actually don't know the facts on that.

Q. Now, turning to Exhibit C, I understand that pages 1 to 7 are to remain unchanged, is that right? A. That is right.

Q. And the speed of the shapers in your computation there is 25 an hour, that is right, isn't it? A. The speed of the shaper is 25 an hour on the model T; that is right.

Q. And the Melling speed is 35 an hour on sheet 1, schedule 1 of Exhibit C, that is right, too, isn't it? A. 35 an hour, that is right.

Q. Now, if the Master finds that the Melling machine turned the T shafts at a speed which differs from your 35 an hour, your account on sheet 2 of Exhibit C can be changed by proper mathematical computation to reflect the Master's findings, can't it? A. Well, the correct way would be to figure it month by month just as I have it.

(2078) Q. But, it could be done? A. Oh, yes; sure.

Q. Now, on sheet 1 of your report, Exhibit C, there is a straightening cost there chargeable to the Melling production on the T shafts? A. Yes.

Q. Now, if the Master finds no straightening operation, straightening cost that is properly chargeable to the Melling in the turning of the T shafts, here again your account on your Exhibit C, sheet 1, can be changed by mathematical computation to reflect that finding, can it not? A. Yes, the same way. In other words, change it to the number of operations it takes to turn the shaft, omitting the straightening operation.

Q. Now, do you have sheet 1 of schedule 1 of Exhibit C before you? A. I have.

Q. You have depreciation there charged to shapers of $19,248.69? A. That is right.

Q. How many shapers did that cover? A. 13.

Q. 13? A. That is right.

Q. The defendant had 22 in operation in 1924, did it not? A. No. Wait a minute, they bought some more in 1922. That is right.

Q. They bought some more when? A. In 1922.

Q. It is a fact, isn't it, they had 22 shaper machines in operation in 1924? A. I don't believe so. Just a minute. (Examining records.)

(2079) Q. I beg your pardon, Mr. Woehrle, that was 17 in 1924. Take a look at paragraph 27 of Defendant's further statement of account, Exhibit B. A. What paragraph is that, Mr. Spohn?

Q. Paragraph 27. It is on page C of Defendant's Exhibit B. A. (Examining document): Is there a question on the record?

Q. That shows, does it not, that the defendant had 17 shapers in use in 1924? A. That is right.

Q. And, the record further shows that in 1924 an order for 5 more of those shapers was cancelled? A. I believe that is in the testimony.

Q. You only used 13? A. I used the 13 machines that were in use for the period up to January, 1924. In other words, there were 13 in use up to that point. The other four were acquired in January and February of 1924, just a month or two prior to the purchase of the Melling machines. Now, those shapers were used a very, very short time, maybe a month or two.

Q. One of them was used for 4 months here, as the record shows, used until June, 1924.

Mr. Farley: I would like to ask Mr. Spohn where the record shows the use of that? As I understand Mr. Herklotz' testimony, those shapers never were used.

Mr. Spohn: I am just reading from your answer to this 27, date of last use, June 5, 1924. I don't know whether it is right or not. That is what I am referring to.

Mr. Farley: I see. I thought you were talking about the wrong one.

(2080) A. I don't think there is any record that says they were actually used. They may have been in the department. This record we got these from is a permanent inventory record which shows they were in the department.

Q. Referring back again to schedule 1, sheet 1, of Exhibit C, you have some maintenance repairs items there chargeable both to the Melling and the shaper operations on the T shafts? A. That is right.

Q. If the Master finds these maintenance repairs as charged by you in your report both against the shaper and Melling machine, or either of them, are not properly chargeable, a correction can be made by proper mathematical computation to reflect that finding? A. I think you would have to refer to my work papers on this, because you would have to have the number of shafts and hours to make that computation.

Q. But, it can be computed? A. Oh, yes.

Q. And, the same is true with respect to the item of

extraordinary repairs set forth on schedule 1, sheet 1 of Exhibit C, if the Master finds those extraordinary repairs are not properly chargeable to the Melling operations on the T's, that can be adjusted in your report by a mathematical computation? A. That is right.

Q. And, likewise, if the Master finds your account should give some effect to the savings and advantages by reason of overhead or burden, your report can be adjusted to reflect that finding? A. I believe I figure all of the overhead or burden in this **(2081)** computation, at least the direct burden expenses with the exception of, perhaps, tool cost, and I think that has been explained away by prior testimony.

Q. And, if the Master finds other adjustments must be made with respect to burden, they can be reflected in your account by mathematical computation? A. Yes, I believe so.

Q. Do you have before you Exhibit C'? A. Yes, I have a copy.

Q. On sheet 8 of Exhibit C', you have debit cost on Ford cam shapers? A. All right.

Q. Does that indicate the Ford cam shaper is a standard of comparison for machining the A-6250 cam shafts? A. It is.

Q. What kind of a Ford cam shaper have you used in here as a standard of comparison? A. Oh, it could be any number of shapers which would not add any material cost to the shaper operation.

Q. Well, which one did you have in mind when you built up this cost? Which one did you have in mind? A. I had the one in mind Mr. Pioch told me about.

Q. Is that Exhibit—the model now designated as Exhibit 256? A. I don't know what Mr. Pioch had in mind when he told me he would design the shaper.

Q. Anyway, you had in mind a shaper which was to be designed by Mr. Pioch? A. That is right.

Q. Is that what you had in mind as a standard of comparison in **(2082)** building up this sheet 1, schedule 2, page 8, Exhibit C'? A. I don't think so. We also had the idea, or, it was given to me by various conferences I had with men in the shop that, perhaps, the shaft would be modified.

Q. Is this account, then, sheet 1, schedule 2, page 8, also supposed to cover a shaft modification, too? A. It will

cover any shaping operation that doesn't increase the cost of machining it.

Q. Any shaping operation at all? A. That is right.

Q. What other might it cover, then, besides the modification of the shaft in Exhibit 256? A. Mr. Oberhoffken's method, also.

Q. It covers his method, which was a re-designing of a new machine altogether? A. It covers any one you can use which doesn't increase the cost of the shaping operation.

Q. What else does it cover? A. I believe there were several other methods mentioned, but I don't recall just how they operated now. In other words, Mr. Hunt, I believe, had another theory, but I don't know whether it has been put in the record or not, and Mr. Brush had another one.

Q. Anyway, these figures you have set down here for debit cost on Ford cam shapers, is supposed to cover any of the three methods? A. Any of six methods.

Q. One set will cover any of six methods? A. Assuming no additional cost of the operation will be necessary.

(2083) Q. Then, these figures are based on the assumption there will be no cost change? A. That is right. Any material cost or immaterial cost might affect it slightly.

Q. The material cost would affect it materially, wouldn't it? A. If you can prove a material cost, yes.

Q. And, a slight change would affect it slightly? A. That is right.

Q. Now, Mr. Woehrle, have you got your work sheets there with you? I want a little information here. A. Oh, I have got practically everything here, yes.

Q. What I want to know is, you will notice on page 8, sheet 1, revised schedule 2 of Exhibit C', you have depreciation charged to the Ford cam shapers of $31,728.94? A. That is right.

Q. Have you got the cost that you can detail here upon which that depreciation is computed? A. Yes.

Q. Let me have that, please. Just the machine cost, Mr. Woehrle; I am not interested in the period it was used.

Mr. Farley: Isn't that right in your exhibit somewhere, Mr. Woehrle?

A. No.

Q. (By Mr. Spohn, continuing): Just let me have your brass tag numbers and your costs. A. Brass tag No. 10,706.

Q. All right. Cost? A. $4,503.35.

Q. All right. **(2084)** A. Brass Tag No. 11628.

Q. Cost? A. Cost, $4,463.50.

Q. Next?

A. Brass Tag No. 12205. Cost, $4,473.50.
Brass Tag No. 15300. Cost, $4,424.39.
Brass Tag No. 15303. Cost, $4,413.00.
Brass Tag No. 15353. Cost, $4,755.00.
Brass Tag No. 15435. Cost, $4,766.39.
Brass Tag No. 15436. Cost, $4,775.56.

By the way, these are the shapers. Did you want the Melling first?

Q. No. Go right on.

A. Brass Tag No. 15437. Cost, $ 4,842,99.
Brass Tag No. 19908. Cost, $10,179.39.
Brass Tag No. 20077. Cost, $10,179.39.
Brass Tag No. 28126. Cost, $ 5,915.65.

Now, from there on I have used—I have substituted the shaper for each old shaper that became fully depreciated.

Q. At what cost, Mr. Woehrle? A. At $5900.

Q. Just approximately. A. The cost of the last shaper.

Q. The cost of the last shaper? A. The cost of the last shaper.

Q. Which was $5,895.69? A. I got $5,915.65. I see what you mean; you mean another shaper that was bought at that time.

Q. I have Brass Tag No.—which was the last one, right on down? **(2085)** A. That is right.

Mr. Farley: You use the price of the brass tag 28126.

A. It doesn't make any difference. They are both about the same.

Q. (By Mr. Spohn, continuing): $10? A. Yes, $10 apart, so whenever you have a shaper that became fully depreciated, I added another one at $5,900.00. I might say

there might be some difficulty in this computation. There was one shaper that was rebuilt, if you recall that. No. 8866 was rebuilt, I believe.

Q. That was done before the accounting period, was it not? A. Yes, before the accounting period.

Q. So that in figuring your depreciation on sheet 8—or, page 8, now, of your Exhibit C′, you use the actual cost of the old shapers as you detail it in here? A. That is right, except for each additional shaper.

Q. Which you took at $5900? A. That is right.

Q. Have you any cost for shaper attachment in there? A. No, there are no shaper attachments.

Q. Have you, on page 8 of your Exhibit C′, computed any additional charge to the shaper because of any trouble they might have by reason of the attachment on Exhibit 256, and the movable parts on it? A. No. I assume there would be no additional cost.

Q. Now, as I understand your sheet 8 of Exhibit C′, the speed of the Melling cam lathes is 1 minute or 30 an hour, is that right? A. 30 an hour, that is right.

(2086) Q. And, of course, here again if the Master finds this speed should be something which differs from the speed you computed, your sheet 8 can be corrected by mathematical computation to reflect the Master's finding, can it not? A. I believe so.

Q. And, do I understand there is a straightening operation included in the cost or charge to the operation of the Melling cam lathe on A-6250 shafts? A. That is right.

Q. Sheet 8 of Exhibit C′? A. That is right.

Q. And, if the Master finds there is no straightening cost, that can be corrected in your sheet 8? A. That is right.

Q. Mr. Woehrle, you have your number of Melling machines that were used in computing depreciation, $27,645.49, as set forth on page 8 of Exhibit C′? A. I have.

Q. And the cost? A. Yes.

Q. Let me have those figures with the brass tag numbers. In order to shorten your answer to this, will you take a look at paragraph 2 of Defendant's further statement of account, Exhibit B. Are those the brass tag numbers and the cost set forth in that answer that you used? A. They are in different order so I will have—I believe they must be the same figures. There is no doubt about that.

Q. And the same brass tag numbers as far as you know? A. Just one moment, I will total them up. They would be **(2087)** except for two. There are 24 machines there and I have used 22.

Q. You haven't used the two machines which have been identified as the tractor? A. That is right. We used 16 for a while, and later on 22. For the model T computation, though, we used only 16 Mellings.

Q. You used the total number of 22? A. For Model A?

Q. For Model A. A. No. We still use 16, and then use them as they were acquired in 1929—I think they were acquired in 1929—in other words, we picked them up the dates they were acquired.

Q. And again, with respect to maintenance and repair items, you have the figures, do you not, and if the Master finds maintenance and repairs are not properly chargeable as set forth on sheet 8 of Exhibit C', a mathematical computation can be made to reflect the Master's finding? A. Absolutely. Naturally.

Q. And, the same is true with respect to burden, if the Master finds some effect should be given to advantage of burden, again a proper adjustment can be made mathematically with your sheet 8, Exhibit C', to reflect that? A. That is only assuming he adds more burden items than I have included in my computation.

Q. That is right, or changes? A. Or changes of burden.

* * * * *

(2089) Q. Now, turning to your page 17 of your Exhibit C', if the Master finds the defendant received a profit or advantages in the turning of those A-6250 shafts, and the T shafts on the Melling cam lathes, then the sheet 17 of your Exhibit C' would show a profit in accordance with your method of computing, wouldn't it, by comparison? A. By comparison in this schedule, yes, but remember we also have Exhibit 305 which was introduced this morning in another computation.

Q. I am just referring to sheet 17. A. That is right, if you want to assume this is the same basis.

Q. I will come to that in a minute. A. All right.

Q. Here again that comparison method could be made. It is just a matter of mathematical computation? A. That is right.

Q. Now, referring to Exhibit 305, you computed your direct labor **(2090)** cost on the turning of the F-446 shafts, first on Melling cam lathes and later Ford cam shapers? A. Yes, sir.

Q. What kind of Ford cam shapers did you have in mind or intend this direct labor charge to cover? A. The same type that I explained for the model A.

Q. That is the three you described for the model A? A. Six.

Q. You only specifically mentioned three, did you not? A. All right, three.

Q. And, you have those same three in mind? A. Yes, sir.

Q. And, this one item of labor cost on these Ford cam shapers, as you have it in Exhibit 305, is supposed to cover each of those three types of shapers? A. That is right.

Q. But that cost, Mr. Woehrle, is in each instance the cost of running the old shaper, the old Ford cam shaper, is it not, except as adjusted for speed? A. It has been adjusted for speed, yes, by the method described herein, which is the perimeter method computed by Mr. Pioch; slowing the time down for the operation based upon the perimeter of the F-446 cam shaft.

Q. And that is also true, is it not, with respect to page 8 of Exhibit C', that your cost of the Ford cam shapers, except for the question of speed, is the old cost of the old Ford cam shapers? A. That is right.

(2091) Q. The cost of operating the old Ford cam shapers? A. That is right, the cost of operating the old Ford cam shapers.

Q. And that is also true of the computation set forth on page 13 for the—no—on page 17 here you make your comparative computation? A. That is right. Those same figures are carried back there.

Q. Yes. Mr. Woehrle, what department, if you know, was Mr. Nellis in at the time you talked to him and secured Exhibit 15? A. He is in the purchasing department.

Q. In the purchasing department? A. That is right.

Q. So that that Exhibit 15, then, was in that department at that time? A. Yes. I can even explain why it was in that department.

Q. Do you know— A. (Interrupting): It was in a file marked T-410 with the papers which Continental Motors, correspondence with Continental Motors at the time the T job was let out to Continental Motors in 1929. That was in there. What it was used for, is not evident.

Q. Does Mr. Nellis' department have anything to do with the purchase of machinery of this type? A. No.

Q. Does he buy cam shafts in his purchasing department? A. I think he buys steel parts. I don't know whether—I assume it is cam shafts.

Q. He had the Continental correspondence? A. He had the Continental correspondence.

Q. And it was from the Continental that the defendant bought those **(2092)** cam shafts? A. That is right, that is beginning January 15, 1929.

* * * * *

RE-DIRECT EXAMINATION by Mr. Farley.

* * * * *

Q. I was just wondering about that proposition of discussing burden with Mr. Hovis. I think you said the first discussion you had with Mr. Hovis concerning this phase of burden, or some expression like that, was when you got this information. Do I understand from that that was the very first time you talked the matter of burden over with Mr. Hovis? **(2093)** A. No. We had discussed burden, but not in connection with this, the burden that went into the percentage.

Q. You talked with Mr. Hovis, in a general way, of what went into burden, but this is the first time you ever got a complete computation? A. That is right.

* * * * *

Q. Now, on the matter of depreciation of the shapers, would you just explain why it was you eliminated the last four shapers from your depreciation cost? **(2094)** A. Well, they were only in the department a very short time, a month, or two, or three, and I wanted a figure that would give me the correct depreciation computation on the battery of machines that were necessary to get out the Ford production.

During the year 1923 we turned out 2 million cam shafts on 13 shapers. In other words, that is all we had available, 13 shapers. We got out 2 million cam shafts. And, that is the most cam shafts we ever got in one year.

The next year, 1924, we dropped slightly below 2 million.

With that information I didn't think it logical to add four more machines which were only used a month or two in the department, and which may have even replaced some of the old machines that had been around the plant for 7 or 8 years. I used 13, at the time when they had their peak load.

Q. Did you make any inquiry as far as the model T production is concerned, particularly for those months where you did not have their actual production figure for department T, as to whether or not in any of that period the Ford Company bought any of those model T shafts from outside? A. I don't know if they bought any outside on the T. I don't think they did, although I haven't positive proof of that.

Mr. Spohn: Have you any proof either way, Mr. Woehrle?

A. I don't have any proof either way. I do have proof that some of these F-446 shafts were bought outside in 1923; 1922 or 1923.

Q. (By Mr. Farley, continuing): I recall very definitely that I had a check made on that, and I thought I had you follow it up, that there had not been model T shafts bought outside. **(2095)** I know I inquired of two or three different sources around purchasing, different fellows, and that is what they told me. A. If you are speaking of 1923 and 1924, I have actual production records for those to support the 2 million cam shafts I mentioned. There is no doubt about those. If we bought some more outside, these would be in addition.

* * * * *

(2102) DONALD M. RUSSELL was thereupon called as a witness on behalf of the Defendant herein, and having been first duly sworn, testified as follows:

DIRECT EXAMINATION by Mr. Farley.

Q. You live in Detroit, Mr. Russell? A. That is right.

Q. And, what is your occupation, please? A. I am a certified public accountant, resident partner of Lybrand, Ross Brothers and Montgomery, in Detroit.

Q. Lybrand, Ross Bros. & Montgomery, is that what we call a national firm of accountants? Is this the only office they have— A. (Interrupting): No, we have about 23 offices in different cities in this country and in Europe.

(2103) Q. About how long have you been with Lybrand, Ross Bros. & Montgomery?

Mr. Spohn: Your Honor please, Mr. Russell's qualifications are readily admitted.

Q. (By Mr. Farley, continuing): You have done considerable cost accounting work? A. Yes.

Q. And, have you had any, in addition to your accounting work, any training or qualifications with reference to actual shop— A. (Interrupting): I was trained as an engineer. I had two engineering degrees; bachelor of science in 1913, and graduate degree in 1916 as electrical engineer.

Q. And, you have done cost accounting for quite a number of large concerns? A. That is right.

Q. Manufacturing firms? A. Manufacturing establishments.

Q. I note on this list that apparently you did some cost accounting for the Baldwin Locomotive Works? A. Yes, that is right; their subsidiary, South Work Foundry & Machine Company; Cramp Brass & Iron Works.

Q. Well now, in connection with this present matter, Mr. Russell, have you done any particular work on it with Mr. Woehrle? A. Yes, I have. I have been familiar with the development of this thing over the entire course. Our firm has been connected with it since about October, 1937.

Q. In fact, you came with Mr. Woehrle over to my office when your firm was engaged on the matter? **(2104)** A. That is right.

Q. I wonder if you could repeat, as accurately as you can remember, the instructions which I gave at that time when you first came over as to the nature of the work to be done? A. Well, at that time it was explained to us that this matter was for the purpose of determining the amount involved, and any savings that were made by the Ford Motor Company by the use of these machines, and you asked us to take a fresh start and go into the original documents and records to try to determine a computation that would fairly set forth any such savings or losses.

Q. Now, then, Mr. Woehrle started doing—I suppose what you might call the field work on the matter? A. Yes, that is right. He and I after talking with you the first day went out to the main office and had some talks; talked first with Mr. Martindale, and then with a Mr. Hovis and others, and it became apparent it was going to take a good deal of detail digging into the records, and from that time I didn't do that myself; I left that to Mr. Woehrle, but I think he talked over the matter with me probably twice a week while he was actively engaged on the field work.

Q. You heard Mr. Woehrle testify here? A. Yes.

Q. As you know, he has prepared and filed a number, —rather, we have presented them as exhibits, a number of various schedules and computations. I would like to ask whether you personally made any review or check of those computations before they were filed? A. I reviewed them all before they were typed in manuscript form, **(2105)** and in a sense headed them so far as the wordings were concerned; column captions, and so on, and that all had my approval.

Q. Did you consider the correctness of the bases a fair and reasonable basis used by him in making his computations? A. Yes, we discussed all those things.

Q. Having in mind that these comparative costs as set forth in these schedules of account were comparative, they are based on a comparison of two different methods, assuming that the standard of comparison used is a proper legal standard, would you say that these accounts and figures were susceptible of determination or calculation with reasonable certainty? A. It is my opinion that the comparisons are set forth in a substantially accurate man-

ner, and that it is possible to make the computations with reasonable certitude.

Q. Would you say that they are accurate with sufficiently reasonable certitude that you would be willing to place a certification upon them as a certified public accountant? A. I would be willing to certify my opinion as to the general result. I wouldn't want to say that the figures in either case represent total costs of the respective operations, but I do believe that in as much as we were here to determine savings, that they properly show, and that we could certify the general result that there was no profit.

* * * * *

(2106) Q. I would again like to have your statement, Mr. Russell, as to the matter of burden of which, probably, you have heard considerable discussion in the testimony here, as it affects this particular computation or accounting. A. Well, it is my belief that the viewpoint in trying to arrive at savings or losses here is a viewpoint that the management would have, for example, faced with two possible courses of action here; the selection of two alternative machines. If they were faced with that problem they, of course, would not figure that the administrative salaries, Edsel Ford's salary, Mr. Sorensen's, Mr. Martin's, had anything to do with that computation, because the selection of one machine or the other would not change that administrative expense.

In the same way, there are many other items in the overhead computation that would not have been changed in any manner by the selection of one machine over the other.

The Master: I suppose if the management were faced with that problem, all they would be interested in was whether one machine would cost more than the other, and not the amount by which the expense of one machine would exceed the expense of the other.

A. They would be very much interested in the expense and the operating wages, because it isn't only the first cost, but the operating cost.

The Master: I am not speaking of, simply, the cost of purchasing the machine, but the cost of the

machine over a (2107) period of years considering all costs that enter into the situation. They wouldn't care about determining the exact amount of extra cost by using one machine over a period of years over the other one; all they would be interested in determining is which machine would cost the most, and whether it is $1,000 more for one or $10,000,000, they wouldn't be particularly interested. They would be likely to pick the one which cost the least in either case.

A. Well, they would be interested in knowing how much, I think. That is, whether there was to be a great difference or slight difference in the expense of working and using these machines. It is true if they could see that there was $100,000 advantage in favor of one over the other, and the advantage was going to run to $500,000, they would be satisfied if they could prove it was $100,000. But, in making that comparison, for example, of course, you can argue that theroretically the insurance might cost more on one machine than the other, but if from the practical standpoint a company of this kind, possibly, has a blanket policy for 5 million dollars for building and contents, it is very doubtful whether there would be any influence in their insurance expense by the selection of either machine, and you can go through the various items of overhead. I think that the items to be principally considered are those that have been discussed in Mr. Woehrle's testimony.

The Master: You consider practically all the other items of overhead are in the nature of fixed costs not affected by the increase in operating costs of one machine over another?

(2108) A. Exactly.

Q. (By Mr. Farley, continuing): Assuming, Mr. Russell, that the Ford Motor Company had, for any reason whatsoever, wished to reach a determination at the time I called you into this matter as to just what, or just which of these two methods of machining cam shafts was the better method to use. Now, my question goes to the matter of the comparison between these shapers and the Walcott machines, and we are going to be guided in the

purchase of new equipment by whatever findings you would make. Would you go about ascertaining these various costs in any different manner for an opinion of that type than you already have done in this case? A. No, I wouldn't. It seems to me it is the same problem from an accounting viewpoint.

Q. Of course, in view of the fact that was a matter of legal proofs, I naturally assume that you probably went into greater detail here than you would— A. (Interrupting): That is true.

Q. (Continuing): —in the other situations? A. That is true.

* * * * *

(2112) Q. Now, I would like to have your opinion, or statement, as to **(2113)** whether or not in your opinion Mr. Woehrle found sufficient records of the Ford Company to make sufficiently accurate computations such as are contained in his report? A. It seems so to me. Now, the main elements—you can go right through them—on the question of production we found some record for the entire period, actual production about which it seems there can be no question as to a great many months, and engine numbers plus service parts for other months, which it seems to me is a satisfactory basis to proceed on. I think the influence of inventory is practically negligible.

The testimony has shown, and the practice is, that they only keep a bank of 2 or 3 days' supply, and in a two weeks' process production, such as they have at the Ford Company, I think it is substantially accurate to rely on these figures. That is, the parts don't go into stores department and stay there for use at some other time in the year. Their operations all follow the seasonal curve of their sales and shipments, and when shipments stop, the assembly line stops and the sub-assembly line stops. The whole thing is keyed together as a continuous production, and inventories have very little effect.

Then, on the question of labor rates, if you want me to go ahead—

Q. Yes, go ahead. A. On the question of labor rates, we have the average of the particular department that was working on these parts, and while theoretically it would be desirable to have the actual **(2114)** rate of the man that

worked on the machine, I think for practical purposes it is satisfactory to take the average departmental rate. It would certainly have to be used in 999 out of 1,000 computations of this kind.

Then, on your rate of production in the machines, it seems to me that every step of our computation all the way through, as we found it finally, wound up at least goes back to a company record of one kind and another, and they all hang together, and to me tell a reasonable story.

* * * * *

(2115) Q. (By Mr. Farley, continuing): Assuming, Mr. Russell, in these comparisons of costs, any comparison of cost that you have a change in the plant from one type of a machine to another type of machine, and when the second type of machine comes in, because of certain peculiarities of that machine it is then necessary to put in an additional operation, which in some way is to prepare the part for the new machine so that the new machine can function properly. Now, would you, as a cost accountant, employ the cost of the two operations used later as compared with the cost of the one operation used earlier? A. Yes.

Q. Now, coming to the question of a straightening operation which has been involved in Mr. Woehrle's computations, let me ask **(2116)** first, was there any record which Mr. Woehrle submitted to you which, to you as an accountant, would justify the use of the cost of those two operations against the cost of a single operation? A. Well, these records that went in as Exhibits 13 and 14 raised the question right away, because the straightening operation appeared in one and didn't on the other. However, I don't think just on the basis of that I would be justified in going ahead and completing an entire computation, but further investigation proved that the extra operation was related to the Melling machine. Therefore, we did go ahead and use it.

The Master: If you are going to be accurate about making a cost comparison where you have an additional operation on a separate machine required by the use of one machine, whereas you do not have such an extra operation necessary with the use of the other machine, you would not only have to take into consideration the additional labor cost, but also the cost

of the extra machine required; that is, the machine upon which the second operation was performed, would you not?

A. Yes, I think you are right.

Q. (By Mr. Farley, continuing): That is an element of cost you neglected to consider, then; or, you and Mr. Woehrle neglected to consider? A. It appears so; whether it is material or not, I don't know at the moment.

Q. I think we all agreed, having seen these little straightening presses we have out there, it certainly should not be a very material item of cost.

(2117) Mr. Spohn: Especially when the man hit it with his hand and it would straighten, I don't think you could figure the cost of that.

The Witness: It seems to me the only items that would come in there would be, possibly, the depreciation on that press.

Q. (By Mr. Farley, continuing): Now, have you installed any cost accounting system yourself for any large manufacturing establishments, such as Ford Motor Company? A. Not for any as large as the Ford Motor Company; no, sir.

Q. Not any quite that large? A. But I have put in cost systems in several of them.

Q. In several rather large concerns, have you not? A. Yes. I can mention the Hamilton Watch Company, and the Illinois Watch Company, and others.

Q. And, your firm has also done quite some accounting work for the Ford Company from time to time, have you not? A. Yes.

Q. And have you assumed you are fairly familiar with the cost accounting methods of the Ford Company? A. Well, I have learned mostly about the cost accounting department of the Ford Motor Company through our work in connection with this case. Most of our work has been in connection with taxes and one thing and another.

Q. Well, I would like to have your opinion concerning the cost accounting methods and records of the Ford Company as you have learned them from your familiarity with this case as compared to the systems used by other fairly large manufacturing **(2118)** establishments?

* * * * *

Q. Do you think you have gained sufficient knowledge of the system and records employed by the Ford Company through this period, we will say, from the early part of, let us say, 1924 until 1932 to 1933, or thereabouts, to have or express an opinion? A. I think I could properly express an opinion as to that, yes, In the four years that I have been in Detroit, I have become quite familiar with the cost accounting methods in the automobile industry, both through my connections with Hudson Motor Car Company, and through my work in the cost accounting association here in which the automobile industry is very important; and, I think that some mistake has been made, if I may say so at this time, in assuming that cost accounting methods and practices that are in use in other types of manufacturing industries are applicable to the automobile industry. The **(2119)** whole industry is built up on the idea of mass production and continuous production, which makes quite a different cost accounting problem from industries in manufacturing a great variety of products on the same machines, and in the same departments at different times.

Here a process is set up, and it continues in exactly the same form, possibly for a year, and in as much as some parts are carried on in three or four years' models, a process once set up may not be changed for three or four years. Therefore, there is no need of studying cost by machines, or by small machine groups. We are primarily interested in the cost of a part, and when the process has been set up that cost can be assumed to stay quite constant until they make a material change in the part or the process.

So that I think these departmental costs, such as you have here with this T-410, setting up a monthly figure from time to time of the total cost in the department against production in the department is a perfectly satisfactory method in the automobile industry.

The Master: Do you know whether any other automobile companies in Detroit or surrounding cities attempt to make a more detailed computation of their cost than the Ford Motor Company, going behind the cost of the department?

A. No. I have talked with a lot of them at different times, and I know that a departmental cost, or a part cost, is as far down as they go into detailed cost analysis.

Q. (By Mr. Farley, continuing): Departmental or part cost such as used by the Ford Company on this cost summary card? A. That is right. I would like to go on a little bit with that **(2120)** statement if I may.

Q. Yes. A. It seems to me there are two processes of cost accounting; one is comprising a product both for inventory purposes, and for the eventual use in determining or estimating selling prices, and the other is factory control.

Now, in a great many industries, the cost accounting system is used for the factory control; that is, to determine whether operations are efficient. They get reports through the cost accounting department which show, for example, a direct labor variance for this week of so much money, plus or minus, and they follow those variances, and if they become too great, they go out into the shop and change a process or find out why that inefficiency has resulted.

That object of cost accounting doesn't apply in the automobile industry at all. I don't believe any of them rely upon their cost accounting departments for control of factory efficiency. They rely on just what the Ford Motor Company does, time analysis and time studies, which they generally call minute cost, and they call it the minute cost system, and then these production reports which can be obtained very quickly, perhaps on a daily basis, are the basis of controlling the factory efficiency, and those are made not for the cost department primarily, but for the shop superintendents, and they get their control that way, and not through the cost accounting.

The Master: Wouldn't an automobile company be interested in the question of cost in attempting to determine whether or not **(2121)** it ought to make a certain part of the car itself or purchase it from some other concern, as to whether, for example, it should make its own glass, or buy glass from the glass company?

A. You mean if they are already making glass?

The Master: Either if they are making glass, or contemplating the commencement of such a process?

A. Of course, if they are just contemplating it, the only thing they have is how much the glass cost them on the outside. Assuming they have started to make their own

glass, and they wanted to find out whether it was a good investment or not, of course, they are interested in building up a cost to make that comparison; yes.

Q. (By Mr. Farley, continuing): Would these cost summary cards give the company the information they require as to the cost of a part as compared as to what it would cost them to buy it on the outside? A. Yes, they would. They would get that all right on an actual cost basis. They wouldn't have to have that study made once a month. They might run it through a month, and then they wouldn't feel the necessity of repeating that cost study for, maybe, 6 or 8 months.

Q. Assuming the method employed in these cost summary cards, with which no doubt you are familiar, these cards would show the total hours in a department, and where the department is making just the one part, we will say, if they have the total number of pieces and the total number of production or man-hours, charged up by the timekeeping department, how accurately does that reflect actual cost of the company? **(2122)** A. That is entirely accurate. In other words, that is the actual cost.

Q. That is quite precise on that point? A. Yes. That is what they paid for it, or for the direct labor.

* * * * *

(2123) Q. (By Mr. Farley, continuing): I think you have already stated the two main purposes of cost accounting, did you not? A. I think I did. I know I started to.

Q. And which of those methods of cost accounting—I think you already have stated, as far as the time studies are concerned as used by the Ford Company, they are used there more as a standard for controlling operating efficiency rather than for determination of the actual cost of the part? A. I would say that the Ford Company does not try to use its cost accounting for shop control at all.

Q. I see. Now, with your knowledge of the system now used by the Ford Motor Company, I would like to know whether it would be your opinion that the Ford Company would or should install a more elaborate system of getting a cost for each of the many **(2124)** operations required in the manufacture of cam shafts, we will say? A. No, I think it would be absolutely a mistake to attempt to develop

a cost system there that would show cost by individual operations.

Q. And, why do you have that opinion, Mr. Russell? What is your reason for it? A. Well, I don't think that any money should be spent on a cost system unless you know that it is going to bring a return, or at least is going to be worth what you spend on it, and I think that the purpose of that would be largely to try to control shop efficiency by the cost accounting, and I think that in this automobile industry, with mass production, they have a satisfactory means of doing that without trying to do it through the cost accounting. In other words, I don't know what the object of such a development would be in the automobile industry.

Q. I was wondering whether you would take into consideration in that respect the fact that in practically most of the automotive plants, shop or operating efficiency in a very large number of instances throughout the plant is really controlled by conveyors at various speeds. Do you understand what I mean by that? A. I think I would like you to repeat it.

Q. What I had in mind was in a great many of the automotive plants, a great many of the departments, operating efficiency, the speed at which operators work there normally, that is controlled by conveyors and conveyor speeds? **(2125)** A. Yes.

Q. Is it not? A. That is right. So that, in the automobile industry your cost accounting should be more like a steel mill, or something like that, where you have a continuous flow of material going through without change.

Q. And, of course, I suppose you had in mind in one of these former answers of yours, that in many of the automotive plants, the manufacturing method concerning a part remains unchanged for a number of years. Is Ford any different in that respect than the other plants? A. The other automobile plants?

Q. Yes. A. No. I think they are just in the same situation.

Q. Except on model T, they kept it up with practically no change for some 15 years? A. That is right. They probably can use longer terms than some of the others.

The Master: Disregarding the question of the cost of a more detailed cost accounting system, might it not

be helpful to the automobile company to have a more detailed system when it is considering, or when the problem arises as to whether a new type of machine should be purchased to perform the operations performed by a given machine at present, to attempt to predict whether the new machine—

A. (Interrupting): Of course, a study like that can often be made, can always be made for a short period of time without setting up a total cost system to carry on repetitive cost reports; an analysis day by day and week by week over a **(2126)** period of years.

* * * * *

(2131) The Master: I was just somewhat interested in this question of burden, and whether or not these so-called fixed costs should be allocated in any way to the machines in question, and a comparison of the cost of the two machines. Of course, if there is a loss shown without the addition of these other items of burden which are not directly attributable to a department, it doesn't make any difference so far as this proceeding is concerned, whether or not there is an allocation **(2132)** of the burden or not, because it doesn't matter how much of a loss there is, if there is a loss there can't be an accounting for it. If there is a profit shown by the use of the Melling machine over another machine which is determined to be the proper standard of comparison, then allocating those fixed costs among the various machines in the Ford Motor Company, if that were to be done it would considerably increase the profit, would it not?

A. Yes, it would, if they were allocated to the machines just on the direct labor basis.

The Master: You do have a lot of cost of accounting and supervision and public relations, and so forth, which are incident to a large business and a large organization, and particularly one which is based on the use of labor-saving machinery which you don't have with a small organization, or one man running his own business, do you? Or, don't you?

A. You mean particularly in a labor-saving machine industry?

The Master: Why, simply thinking of the analogy of a blacksmith shop again, to take some concrete illustration, you have a blacksmith running a shop. He doesn't have to keep any elaborate records, and doesn't have to keep records of what machinery he has in the shop, and he doesn't have any problem of management or supervision. When you start adding machines and increasing the organization, why, you do have a great many expenses which are apart from direct labor expenses, which have to be taken care of out of the profits of the business or out—I shouldn't say profits, perhaps, but out of the proceeds of the business.

A. Yes, you do, your Honor. But, a great many of those, I think, **(2133)** that you have mentioned would come under what the Ford Motor Company calls commercial expenses, which might be left out of our overhead percentages anyway, and the fixed items which are referred to are more items that are included in the overhead burden percentage figures that have been in this case.

You see, over and above these burden figures there is a higher burden, I think they call it commercial. It is frequently divided into two parts; one for selling, and one for administrative in general. But even in the so-called manufacturing burden there are a great many elements that, it seems to me, wouldn't come into any computation of the kind we have here.

The Master: Well, I guess I won't pursue that any further, because I am afraid I am getting beyond my depth right now.

Mr. Spohn: That is all.

* * * * *

(2136) HAROLD M. WOEHRLE thereupon resumed the stand as a witness, and having been previously duly sworn, testified further as follows:

The Master: Is there any place in these various accounts that you have submitted where you have given consideration to the third cut which certain witnesses testified was taken on the Walcott lathes after the six additional lathes were purchased in 1929?

A. No, if your Honor please, I think that the testimony might have led you to believe that those six machines were used for that operation.

The Master: One witness was specifically asked that question and I believe replied they were used for that operation.

A. Well, I checked into that personally and found out that they had been bought for that purpose, but due to some unusual factor, presumably this lawsuit, they were not put on the line as a third cut, but either replaced or were used in the actual operation of which the others were used.

In other words, I don't believe any third cut was ever employed actually. So, in my computations I have assumed that all 22 machines, after the purchase of the additional six were used in the ordinary operation, and I have computed depreciation on the total 22 machines, as though they had been used on turning operations, first and second cuts.

Re-Direct Examination by Mr. Farley.

Q. Suppose, Mr. Woehrle, the machines had actually been put into production for the purpose for which they were bought, how would **(2137)** that have affected your computation of costs here, as compared to model A shafts, assuming, of course, one would have to assume that you had some record or other evidence of the recollection of employees of the time consumed in performing a third operation; would that have increased or lowered the cost of using the Walcott machines as compared with the shapers? A. Well, naturally that would have increased the cost of the Melling operation, because we would have had to take three cuts using Melling machines, whereas we no doubt would have gotten away with the same production on just one operation of the shapers.

However, I have given all benefit of the doubt and assumed that those six machines were used in regular production, and figured depreciation on the total works, the total 22 machines.

The Master: If the six machines were obtained for the purpose of taking a third cut, and were not used for that purpose, then is it logical to conclude that

sixteen machines would have taken care of the entire production?

A. Well, it is possible that 16 could have, but if you remember my computation, in my comparison of the Mellings with the shapers I also added additional shapers in my computation and figured depreciation on additional shapers; thereby still maintaining the same relationship between the shapers and the Mellings.

• • • • •

(2141) Re-Cross Examination by Mr. Spohn.

Q. Along the line of this third cut, if the third cut was necessary and was taken, that would decrease the finish grinding, wouldn't it, cost? A. Well, I think you are getting into the realm of probability there. It seems to me that if a third cut was necessary, that would mean that the first two cuts were not sufficient.

• • • • •

(2144) The Master: Do you want to dictate a stipulation on that? Suppose I make a statement and see if it is agreeable to counsel.

Subject to objection by counsel for the plaintiffs that evidence tending to show that the machines made by the plaintiff company could not satisfactorily cut a cam on a Ford cam shaft is entirely irrelevant and immaterial to the questions before the Court in this proceeding, it is stipulated between counsel for both plaintiffs and defendant that the testimony of certain witnesses in the case of Melling vs. Gordon before the Court of Appeals of the District of Columbia in the Patent Interference proceeding before that Court, which was printed in a printed record; the testimony of these witnesses concerning the experience of the Jackson Motor Shaft Company with Gordon machines used in that company for the purpose of cutting cams in a cam shaft is admitted as evidence in this proceeding, said testimony being the testimony of the following witnesses; Otto H. Schultz, appearing in the record at page 132.

Bert Weisel, appearing in the record at page 190.

Frank Steinke, appearing at page 230.

William Cunningham, appearing in the record at page 288.

(2145) And, Charles Gordon, appearing in the record beginning at page 379.

I should further state that the admission of the testimony of these witnesses is restricted to that portion of their testimony which relates to the experience of the Jackson Motor Shaft Company with the Gordon machine.

Any further qualifications or objections?

Mr. Michael: Well, I would like to just make my objection to the relevancy of the matter a little bit clearer, if I may, by stating I object to the testimony as irrelevant on the ground the utility of the Gordon patent is not a proper consideration in this proceeding and, further, if it is directed to the question of apportionment, there is no basis in this proceeding for apportionment.

* * * * *

(2147) ALEXANDER OBERHOFFKEN was thereupon called as a witness on behalf of the Defendant herein, and having been first duly sworn, testified as follows:

DIRECT EXAMINATION by Mr. Farley.

Q. You live in Rockford here, Mr. Oberhoffken? A. I do.

Q. And, who are you employed by? A. The Ingersoll Milling Machine Company.

Q. How long have you worked for the Ingersoll Company? A. Since 1929; November, 1929.

Q. What is the nature of your duties here; what kind of work do you do here? A. Engineering work.

Q. You were employed by the Ford Company? A. Ford Motor Company, yes.

Q. What period of time were you employed by the Ford Company? **(2148)** A. From 1912 to 1929.

Q. Now, when you were employed by the Ford Company did you have anything to do with the designing of new machinery there, special purpose machinery? A. Yes.

Q. How long did you work on that type of work? A. On that type of work, well, special purpose machinery, if you don't include fixtures, practically from about a year after I got there until I left. Until I left, I was working on it. I worked on fixtures before. Practically worked there all the time I was there on special purpose machinery.

Q. Did you have anything to do with the designing of a cam shaft shaper? A. Yes. I originated the design of that.

Q. When was that, Mr. Oberhoffken? A. It is my recollection around 1914, 1915; something like that.

Q. Now, that shaper was designed for what particular job? A. The shaper, at the time, why we designed it for the model T shaft, cam shaft.

Q. And, were you familiar with the Fordson tractor shaft? A. Yes, I am.

Q. Do you remember how long, when it was Ford started making the tractors? A. We started in production in 1917; we had experimental ones before production started in 1917.

Q. By that time how many of these shapers had been built, if you know? A. Oh, I could not quite recollect. There were enough shapers to do the whole model T production at that time.

(2149) Q. How were you machining the tractor cam shafts? A. We ground them; rough-ground them with grinders.

Q. Why did you not use the shaper on the Fordson job? A. One reason there was not—it was during wartime, and we were in a hurry to get available machinery, and to use the shaper we would have to do some changing around, while we could buy grinders on the open market.

Q. How large was the tractor production? A. Oh, it might have been, maybe, about 30 an hour or so, something like that. It ran—the highest ran about 500 a day. I think that was the peak.

Q. Now, I would like to ask you whether or not the shaper could have been used for machining the tractor shafts? A. Yes, it could have been, with necessary modifications.

Q. Did you at any time consider making any modifications— A. (Interrupting): Yes.

Q. (Continuing): —for using the shaper on the tractor shafts? A. Yes, I did.

Q. And, you discussed this matter with me in Detroit a few months ago? A. Yes.

Q. And, you explained the idea you had in mind at that time. Would you tell the Court when you first considered the proposition of making the necessary modifications to use the shaper on the tractor shaft? A. That was after the war stopped, I had a little time to consider those things, and I went into that making the change.

Q. That was, say, 1919? A. Yes, somewhere around there.

(2150) Q. What did you have in mind doing at that time in so far as the necessary modifications to be made? A. The modification on the shaper, I figured on cutting in both directions, so the tools could cut in both directions, and relieving them individually.

Q. Relieving them individually. By that you mean raising them up individually for the return stroke? A. Yes.

Q. Now, I show you some drawings that were introduced here before Judge Tuttle. I first call your attention to a photograph, Defendant's Exhibit 53. Can you state what that is (handing a document to witness)? A. Yes, that is the cam shaper; the Ford model T cam.

Q. And, here are some drawings which have been marked Exhibit 63 in the trial before Judge Tuttle, and Exhibit 62. Will you state what those drawings are (handing the drawings above-referred to to the witness)? A. Those are assembly drawings of the shaper as it was designed originally; essentially as it was designed originally by me.

Q. And, the driving mechanism used there on the table to reciprocate the work under the tools, will you state whether or not that was a conventional drive for shapers? A. That was a conventional drive for a shaper. I might say, a modification of a—a slight modification of a conventional type.

Q. In this machine of yours, however, it differed from a shaper in that the work moved under the tools rather than the tools moved across the work? **(2151)** A. Yes.

Q. Now, when you told me about this idea of yours in Detroit, you requested that we have some sketches made to illustrate that. A. Yes.

Q. And, I show you the two drawings, Exhibit 268 and Exhibit 269. Will you please, by referring to those drawings, just explain how that machine was to be constructed, and how it would operate (handing the drawings above-referred to to the witness)? A. On the machine as it was built all the tool slides were carried in one big casting, which was moved for relieving the tools up and down in a body. Now, this change would mean that this tool slide during the work cycle would be stationary, would be locked in place, and each slide would individually be relieved ultimately according to the stroke, forward or backward, by a wedge introduced in the tool slide transversely to the movement of the tool slide, this wedge being operated by a cam on a cam shaft, which would not be mounted on this present tool slide. Means would be put on there so that this could be—the cam shaft could be mounted on there, and this cam shaft would be driven in cycle by gearing in cycle with the cam shaft to be worked on.

Q. Now, in the drawing, Exhibit 268, 8 tools are shown, and you will notice some of the tools are marked; four of the tools are marked "T," and four of the tools are marked "T_2," do you see (indicating)? A. Yes.

Q. Will you just describe how those tools would cut, which tools would cut on which stroke? **(2152)** A. Tools "T" will cut, we will call it, on the forward stroke.

Q. That is, with the parts as shown in the drawings now, the cam shaft is in a position to be moved to the left of the drawing? A. Yes. The tools "T" are in a position to start cutting.

Q. Yes? A. While the tools "T_2" are just through their cut, and the tools "T_2" are just being relieved, ready to be raised right now in this position (indicating).

Q. And, the wedge that you were talking about is shown in drawing, Exhibit 269? A. Yes.

Q. And, is marked "W," is that correct? A. Yes.

Q. Now, can you just describe the action of the parts shown in the drawing, Exhibit 269, a little more? As the cam "C," referring to that cam C, was there a cam at all similar to that in the original machine? A. Yes. There is in the original machine, there is a cam similar; but, there is only one cam in the original machine, right here (indicating). This is the cam in the original machine. Just a

minute, I am looking at the wrong part. This is the cam here (indicating).

Q. We have another set of drawings here, Exhibits 254 and 255, and I think on this drawing, Exhibit 255, we put a reference character (handing the documents above-referred to to the witness)? A. On this drawing the relieving cam is up here (indicating).

Q. And, that is marked in lead pencil? A. Yes.

(2153) Q. Cam C.

Mr. Michael: No, that isn't what he is referring to. This is the one, but not this (indicating).

A. No, right on this center here.

Mr. Michael: You see cam C here has an arrow going to this point. That isn't the cam you refer to.

A. No, I don't think that is the cam. The reference line here, the arrow line—the cams revolve around this center here.

Mr. Michael: Hadn't you better mark that?

Mr. Farley: I wonder if you could mark the cam C here, Mr. Oberhoffken, just right where it should be.

(The witness thereupon marked the drawing.)

The Master: You better mark it with another designation.

The Witness: That is correct. This cam C comes around here.

Q. (By Mr. Farley, continuing): And, the arrow line that is on the drawing is correct? A. It is correct. It is this shape here. The roller contacts this one here. This consists of two cams next to one another; one for the up movement, and one for the down movement. It is necessary to have that or the cam will not work the proper cycle.

Q. Now, I show you these drawings, Exhibits 254 and 255, and you have seen those drawings before with those crayon changes on there (handing the documents above-referred to to the witness)? A. Yes, I have seen them several months ago.

Q. Now, do you understand what is shown in those drawings, **(2154)** Exhibits 254 and 255? A. Yes, I do.

Q. Will you explain your understanding of that modification as shown in those drawings with the crayon, and we have some other drawings here? A. This drawing shows an auxiliary slide mounted in front of the machine which carries extra tools for the cams that can not be machined by the regular slide. And, this slide has movement—well, I don't know how to describe that movement—that is a differential movement, I would say, in relation to the tool slide, in such a way the tools will catch up with it and machine the shaft in such a manner. If I had the shaft I could probably—

Q. (Interposing): Explain it a little better? A. Yes.

Q. Well, we have some drawings of the shaft here. This is Exhibit 257 (handing drawing to the witness). A. I mean by differential movement that this slide has twice the movement of the shaft slide, and by that means this slide moves at twice the speed in order to catch up with that, in order to machine the cam.

Q. Now, I would like to ask, Mr. Oberhoffken, if you consider the attachment as shown in these drawings, Exhibits 254 and 255, 256 and 257, as being a practical construction? A. Yes, I do.

Q. Do you think you would have any difficulty in manufacturing a construction of that kind? A. No.

Q. And making it work? **(2155)** A. No, I don't think so.

Q. How about the construction that you contemplated for the model F shaft, and which is shown in these drawings, Exhibit 268 and Exhibit 269, would you consider that a practical construction? A. Very much so, very much so. That is the solution I had in mind when I figured on using it for the tractor shaft.

The Master: How far did you go with this idea back in 1919? Did you have any plans made?

A. I had some plans made of this one. I made some sketches of a similar arrangement of this one. Bricker and I had layouts made of some other methods.

The Master: Why was nothing done to consummate your plans?

A. Well, at the time, you know, we didn't have very high production, and it was not considered advisable to build any equipment for that at the time.

The Master: Do you know what happened to those plans you made at that time? Were they preserved in the Ford Company files?

A. No. I don't know. They were drawings, brown paper drawings, and probably were thrown away.

The Master: Just rough sketches?

A. They were more or less sketches, yes; kept around awhile and thrown away. They were line drawings, but thrown away.

Q. (By Mr. Farley): Let me ask this, as far as drawings 268 and 269 are concerned, you explained the idea shown therein to Mr. Brush? A. Yes.

(2156) Q. And, he had these drawings made. I sent these drawings on to you shortly after they were made for your comments, or as to whether you wanted to make any changes, whether they correctly represented your idea? A. Yes.

Q. And as I didn't hear from you about it, I assume you found no comments or corrections to make? A. I thought I did write you a letter that I considered them correct. I did when I got them.

Q. Maybe you did, but I don't remember. A. I could look up the file. I thought I did.

Q. I would like to ask you this, as far as all of the mechanism shown in drawings Exhibits 61 and 62— A. (Interrupting): Which ones are those?

Q. Those are these original prints. As far as all of that mechanism is concerned, would it— A. (Interrupting): This is the original design, this one (indicating).

Q. That is Exhibit 255? A. Yes. This other one, the one I saw first shows a modification of the location of that cam.

Q. I see. That is, Exhibits 61 and 62 are a modification of the original drawings as shown in Exhibits 254 and 255, is that right? A. That is right.

Mr. Michael: That is Exhibits 62 and 63.

Mr. Farley: Yes, Exhibits 62 and 63; that is right.

Q. (By Mr. Farley, continuing): Now, as far as the remainder of the mechanism as shown in those original drawings of those **(2157)** shapers is concerned, would

there be required any changes, or what changes, if any, would be required in those to adopt the machine for the tractor type of job as you show it in sketch 268 and 269? A. The relieving cam here (indicating), shall we call them?

Q. That is the cam C we have been talking about? A. Yes; would be removed, and provision would be made by a screw or something to lift up the slide out of engagement, or leave it in position.

Q. What would be the purpose of that? A. To get the work out, you see.

Q. Did you have any provision of that type in the original shaper? A. Yes. We have—we wouldn't have to make that because it is already there. There was an eccentric on the pivot shaft to move that up, so the cam could be disengaged and locked stationary, and then you can move the slide in and out by moving this eccentric by the same way as it was done originally.

Q. Originally was that a means whereby at the end of the cycle the cam, the whole slide, moved up automatically? A. Yes.

Q. And you would retain that? A. Would retain that, yes.

Q. I see. A. Then, on the front of the slide you would have to add a bracket carrying the wedges and the cam shaft, the new cam shaft for relief.

Q. As shown on this drawing, Exhibit 269? A. Yes.

Q. And that would be the only changes required in the machine? **(2158)** A. Yes. And, you would have to provide means for driving this cam shaft from the same place, you know, where formerly you drove the shaft here (indicating). It has to be in cycle.

Q. Would the cam C shown in drawing, Exhibit 269, would that be driven on the same shaft, or from the same shaft as the cam C? A. As this one here, yes. That is what I mean. It would be driven from that at the same speed, the same relationship. It would have to be geared over.

Q. And you would use, of course, in your, what we might call, double action shaper, one cam C for each of the tools? A. Each of the tools.

Q. That would be 8 of those cams altogether? A. 8 of those cams altogether.

Q. Now, the drawing, Exhibit 268, does show some modification in so far as this yoke "Y" is concerned over the yoke for driving the table as shown in drawings, Exhibits 62 and 63, doesn't it? A. This modification is made to give the cam shaft slide the same speed forward and backward, since we are cutting now on both strokes back and forth.

Q. Did you consider that at any earlier date when you were thinking of this other construction? Did you have that also in mind? A. Yes, I had that also in mind. Of course, it is not essential for the operation of this.

Q. Just what do you mean, Mr. Oberhoffken? A. Because it would not cause any harm if that went faster or slower in the other one. If you didn't want to go to the (2159) expense of doing that, you wouldn't have to do it.

Q. You could use the same drive? A. The same drive. The speed on the tools is so slow that the higher speed on the other tool would still be workable. It would have unequal speed, but it still would be workable.

The Master: If you were building another machine, would it be any more expensive?

A. This would be cheaper.

The Master: This modified?

A. This modified would be cheaper, but on a changeover of a machine you might leave that off.

Q. (By Mr. Farley, continuing): During your period of service there at the Ford Company, Mr. Oberhoffken, was this the first special purpose machine you had designed? Was this cam shaft shaper the first special purpose job— A. (Interrupting): No, I don't think so. I had been there for several years, you know.

Q. About how many special purpose machines would you say you had designed at the Ford place? A. Oh, I have been on it for 2 or 3 years, you know; there must be, maybe, a half-dozen or dozen, you know, different kinds.

Q. When you design a special purpose machine of that type, what do you use as a starting point, we will say, for the machine you are going to design? Do you understand what I mean? A. Yes. Well, there is no special formula for that, exactly. Sometimes, you know, when somebody has got an idea, there is really nothing to go by,

merely that production cost is too high, you know, as it happened to be in this case.

(2160) Q. Production cost of what? A. Of this particular operation, as previously performed.

Q. But not as performed on these machines, on these cam shaft shapers? A. Yes.

Q. What I had in mind was this, if, in the engineering department they design a shaft, a cam shaft? A. Yes.

Q. Was that really what you had as your starting point? A. Yes.

Q. For the designing of this machine? A. Oh, yes, I had that, if that is what you mean. We have the engineering drawings for a start.

Q. Did you consider any other methods of machining the cams on these model T, besides this shaper principle that you did use? A. Yes. I considered milling and turning before I considered the shaper method.

Q. And, why did you adopt the shaper method? A. Because it seemed to me, you know, that it was the simplest matter, which my superiors and others agreed with me; it was a simpler matter.

Q. During your period of service there in the machine designing department at the Ford Company, did you ever make it a practice in that department to reconsider, or consider, a change in the design of any of the parts that were going into the car to help out production? A. Yes. That was done very frequently.

Q. And, do you know enough about the operation of an automobile engine, and particularly the cam shaft, to state whether or (2161) not any modification might have been made in the design of either the tractor or the model A shafts that would enable those shafts to be made on the cam shaft shapers without any change in the shapers? A. Yes.

Q. The tractor cam shaft was very much larger than the model T, was it not? A. Yes, considerable.

Q. Whereas, the model A shaft has the same spacing of the cams and the width of the cam is the same in the model A? A. Yes.

Q. Mr. Pioch testified, Mr. Oberhoffken, that it would have been perfectly feasible and practical to have cut a quarter of an inch off the two large bearings which inter-

fered, and then to have used the model T cam shaft shapers as they were without change.

Mr. Michael: I object to that question, telling this witness what some other witness has said, and then asking him if he agrees with that. That is about what it amounts to.

The Master: I think you might better ask the question direct, rather than referring to Mr. Pioch's testimony.

Q. (By Mr. Farley, continuing): Well, would it be feasible or practical, in your opinion?

Mr. Michael: Why not ask him what he would suggest in the way of changing this shaft?

Mr. Farley: All right. You can answer the question that way.

A. Well, it would have been possible, you know, to provide clearance **(2162)** on this cam which is closest to the bearing. You might have taken some off the cam, you know, and some off the bearing to provide, say, instead of as I recall it is about 3/16 of an inch—so it would get about 3/8 of an inch, and in that case we would have been able to get a tool in it.

Q. (By Mr. Farley, continuing): You consider a clearance space there of 3/8 of an inch ample? A. We would have to design a different tool, a tool with a body. Perhaps, the tool would be made wider to get the body. It would be narrow, say, in this direction, a flat tool (indicating), with a point on there. In that case we would have been able to get along with about 3/8 of an inch which, in my opinion, was perfectly feasible to do in the design.

Q. Were there any instances of any changes of that type made in the design of any of the parts for facilitating production while you were there? A. You mean in general—

Q. (Interposing): In general. A. (Continuing) —on my part? Oh, yes. It was done quite frequently; quite frequently.

Q. I show you a computation, Exhibit 264, and ask you if you understand that (handing document to witness)? A. Yes, I understand that. That is essentially,

you know, what we figured on at the time, and what they were running to my recollection.

Q. And that is a computation of the speeds and feeds? A. Yes.

Q. Speeds for cutting per minute, and feed of the cam shaft shaper as designed by you? **(2163)** A. Yes.

Q. Now, I show you a couple of drawings, Exhibits 260 and 261, and I will ask you if you know what they are (handing drawings above-referred to to the witness)? A. Yes, I remember them very distinctly, because I designed those myself; I mean, originally, the original part. This one illustrates the part, the sleeve on the end of the tail stock, with a bayonet lock on there for quick action of the tail stock. I designed that first one, I might say, around 1913, or around there, 1914, or sometime.

Mr. Farley: I might say, for the purpose of the record, these are the drawings produced by Mr. Pioch to show the construction of the quick-acting tail stock that was used on the Reed Prentice machine.

A. I can tell you when the first one was used. I remember. It was used on the rear axle drive shaft tubing to perform some operation. We had a longer pilot going in there, and it took a long time to get that out, and I had the idea to make this mechanism. We just took a steel sleeve, and pressed it on the back, and put a pin in there in order to get this pilot out of the rear end.

Q. What type of lathe did you put that original one on? A. Just an ordinary engine lathe. I think it was a Reed Prentice, by the way, too, which we most of all used, Reed Prentice, at that time.

Q. Do you happen to know whether or not Reed Prentice uses that construction now? A. I think they do.

Q. It was my understanding that quick-acting tail stock which you **(2164)** designed in 1913 is more or less standard now on lathes? A. Yes, I think so.

Q. I show you a sheet of paper which is marked Exhibit 61, and will ask you to read that description there, and state whether or not it is correct (handing document to witness)? A. (Examining document): No—

Mr. Spohn: (Interposing): If your Honor please, I don't think it makes much difference, but that ques-

tion calls for this witness, sort of impeaching a sworn affidavit of defendant's prior witness before Judge Tuttle.

A. That is not correct, the statement about the cutters moving; that is not correct. It is the shaft that moves.

Mr. Farley: That is not an affidavit that was made before Judge Tuttle; it was a paper filed.

Mr. Spohn: I say it was an affidavit sworn to, and filed as an exhibit before Judge Tuttle. That is what I meant.

The Master: Well, the question is worded in a form which makes it seem objectionable. I suppose it would be proper, however, to ask the witness a direct question as to whether the cutters did move from left to right. You can ask him about how the cam shaper operated.

Mr. Farley: I think he has already said that.

The Master: Yes.

Mr. Farley: I don't think it is of any importance, anyhow.

Q. (By Mr. Farley, continuing): I think you said a little while ago, Mr. Oberhoffken, you considered other methods, milling and turning, at the time you first designed your cam shaft shaper. What method, if any, of turning did you have in mind? **(2165)** A. Turning? We made some sketches or lay-outs on ordinary paper to turn the shaft and move the tool in and out, and rocking it about this point (indicating) with the tool held into a little segment, you know, sliding segment, up and down, and that segment operated by a cam shaft in the back.

Q. Why did you not adopt that type of construction? A. After that, you know, I got the idea of the cam shaper, you know; we considered that simpler, and a more foolproof machine. And, furthermore, we found that our production, if anything, would be higher on the cam shaper, from our calculations. It would be higher definitely.

The Master: Why did you think you needed to rock the tool back and forward? Why didn't you just let it move in and out?

A. Well, we considered it at the time necessary, you know, in order to prevent, to keep the proper clearance angle on the tools.

The Master: Did you have in mind an end cutting tool, or side cutting tool on the operation?

A. Just an ordinary tool, you might say, lathe tool.

The Master: Was the tool going to cut on the end?

A. On the edge. The tool was forwarded across the shaft.

The Master: If the tool was forwarded across the shaft, would it do its cutting on the end of the tool, or take off the side?

A. Yes.

The Master: Which is it?

A. I would call it the side.

The Master: And, you would rock the shaft to get the **(2166)** proper clearance?

A. Rock the tool.

The Master: Or, the tool, rather?

A. To get the proper clearance angle on the tool. In other words, the reason for that is to maintain better life for the tool.

Q. (By Mr. Farley, continuing): How long have you been familiar with the machine tool industry, Mr. Oberhoffken? A. In which way do you mean that? As an industry or with machine tools in general?

Q. Both machine tools in general and the practices and methods used in the machine tool industry. A. Well, I might say, that is coincidental. My entrance in the business was in 1906 with Olds Motor Works in Lansing. I worked originally as a lay-hand, and later as a toolmaker and tool designer. Since that time I have been in it all my life; I have never been out of it.

Q. Do you know of any instances in the machine tool industry where the user or the manufacturer of the machine, rather, sells a machine on the basis of the purchaser paying so much per piece for each piece turned out

by the machine? A. It has never come to my notice that I know of, that I can recall.

Q. Does your company here—the Ingersoll makes a great many heavy-duty and large production machines? A. Yes, and small machines, also.

Q. Do you sell any of your machines on the basis of the purchaser paying so much per piece? **(2167)** A. None whatever. We have not sold any since I have been here.

Q. What would be your knowledge, if any, concerning the relative cost of turning these shafts in the Ford Motor Company, either model T or model A, of shaping the shafts, the contours of the cams by the shaping method, as compared with turning them?

Mr. Spohn: Just a moment, if your Honor please, the witness has offered no experience in cost.

Mr. Farley: I asked him what knowledge, if any, he had.

A. I know of the time we could do it on the shaper, but I have no personal accurate knowledge of the time on the turning method. I have no direct knowledge of the turning method, of what it takes; no personal knowledge.

Q. (By Mr. Farley, continuing): Would you have an opinion on the matter? A. Yes. That goes back, you know, to the investigation I have made; I consider that the shaper is the faster method.

Q. Now, you have observed the shapers which you designed, of course, in operation in the Ford plant? A. Yes.

Q. Do you know whether or not you had to employ a straightening operation on the shaft just before they were put into the shaper? A. No, we did not.

* * * * *

(2169) Q. (By the Master) You said at the time the shaper was designed you gave some consideration to the milling method of shaping cams. You were already using milling machines for that purpose, were you not? A. Yes. We were using form cutters setting, milling the shape lengthwise. That is not the method I was considering. I was considering a milling method which would work simultaneously on all cams, while the method we were using was working step by step from one cam to the other.

The Master: Do you know what methods the other automobile companies were using to rough machine cams during the period, say, 1920 to 1928, roughly?

A. They were either grinding them, rough-grinding them, a lot of them were, and a lot were using the turning machines.

Mr. Spohn: What was the last, either rough-grinding or turning?

A. Yes.

The Master: Before they began to install any turning machines, do you know whether any other companies besides Ford in the automotive industry were using other than grinding machines for that purpose?

A. They were using, before we had shapers in the earlier days, they were using the method of milling the same as Ford did.

The Master: But, they discarded that method?

A. They discarded it in favor of rough grinding.

The Master: Do you know why the Ford shaper wasn't copied by other automobile companies for that purpose?

(2170) A. No; there was no other company at the time than the Ford Company that would go into building elaborate machines like that, no other automobile manufacturer. I considered that one time myself I would like to start up something by building shapers which would be, of course,—would have been considerable faster than the shaper we actually had. Our shaper was limited due to its weight of the ram.

The Master: Due to what?

A. The weight of the ram. It was too heavy, and that limited the speed that we could travel it; limited production. I considered it several times; any new machine I would have designed from the bottom up would have twice the speed we had then.

Q. (By Mr. Farley, continuing): That speed of the ram, that was the limiting factor? A. The limiting factor; not the cutting speed.

The Master: Did you have anything to do with the purchase of additional shapers, or the ordering of additional shapers around 1923 and 1924?

A. No. 1923 and 1924 I was doing special work, you know; Mr. Ford, you know, in Dearborn, I was in the engineering laboratory after the tractor plant was transferred to the main plant.

The Master: You didn't even know such machines were being ordered?

A. Eventually I found out about that; I happened to be interested in that particular work.

Q. (By Mr. Farley, continuing): You were not consulted at all **(2171)** prior to the ordering of those machines? A. No.

Q. And, were you ever consulted prior to the Ford Company buying these lathes for turning their cams? A. No.

The Master: Did you ever communicate to other designing engineers in the Ford plant your idea about speeding up the shaper by a modification?

A. Well, I did, you know, talk about that. I talked to Mr. Emde at the time that the shaper could be speeded up a lot.

The Master: The way you were going to do that was by reducing the weight on the ram?

A. By reducing the weight on the ram.

The Master: How would you do that, by using another kind of material?

A. Lighter. Either steel or aluminum alloy construction; make it a lighter construction, and making the driving mechanism stronger so you would get better bearing surfaces on that, so you would be able to absorb the shocks and the pressure generated by the higher speed, the return motion. It would be just a general re-design, a detail re-design working on the same general principles. An instance of where that was done was by the Fellows Company

after, you know, after we designed the cam shaper, about that time we wanted to buy gear shapers for a triple gear on the transmission. The standard gear shapers were too slow; they couldn't speed them up, because they had too much weight. I designed and laid out a machine that would work much faster, with a faster stroke. By that time the Fellows Company went **(2172)** ahead and did the same thing. They designed a high-speed shaper which had about two or three times, at least double the speed. When that happened, we bought them. Standard machines could not—I mean we didn't figure on using them, because they were too slow, but they speeded them up by reducing weights and motions.

Q. (By Mr. Farley, continuing): You said something about the Ford Company being—other manufacturers not having a sufficiently high production, or that Ford was the one who would only build special machines? A. Yes. As far as I know at that time, you know, they hadn't anybody else, you know,—they didn't go into building special machines for themselves so much. They relied more on the outside supply, machine tool manufacturers, than we did.

Mr. Farley: I think that is all. You may cross examine.

Cross Examination by Mr. Michael.

Q. Mr. Oberhoffken, at the Ford plant did you have anything to do with the design of the internal combustion engine, or parts thereof? A. No.

Q. I think you said that the shaper was the faster method, according to your investigation, and by that I think you meant the investigation you made at the time you designed the shaper. Was that in 1914 or 1915? A. Somewhere around there; yes.

Q. Then, you concluded that after investigating the turning of the cam and the milling of the cam? **(2173)** A. Yes, sir.

Q. When did you go into the tractor department, Mr. Oberhoffken? A. 1917.

Q. That was when they were first getting under way? A. When we first went into production.

Q. Was it on your recommendation that they started out grinding the F shafts? A. Well, yes,—it wasn't di-

rectly, no, I couldn't say on my recommendation, because Mr. Bricker and I together, we laid out operations, and we used available commercial tools at that time.

Q. How many grinding machines did you have in that department when you first started? A. I think we had only one.

Q. And, that was a new machine? A. I think so. I couldn't tell. It might have been a machine taken over from the main plant. I couldn't recollect that now.

Q. You weren't grinding cams anywhere else in the plant, were you? A. Oh, yes, we were finish grinding them. There was no difference between the rough grinding and finish grinding machines.

Q. So, you might have taken a finish grinding machine over? A. Yes.

Q. You don't recall which you did? A. No. I think we had new ones, but I couldn't definitely say.

Q. How long after you got this one grinding machine was it that you began to add others to take care of the production of the F shaft? A. I couldn't say. Of course, it went on as it was required. I **(2174)** do not recall the production of those grinders.

Q. Do you remember how many grinders you had doing the rough grinding on your F shafts at the peak of your production? A. No, I don't.

Q. You wouldn't know whether it was two or fifteen? A. Well, I would know it wasn't fifteen, or anything like that.

Q. Could it have been as many as seven or eight? A. Rough grinding? No.

Q. At the peak of your production? A. I don't think so. I don't think it could have been more than three or four, you know.

Q. What was the production on the rough-grinding machines with the F shaft?

Q. That, also, I can not recollect. I would have to reconstruct it. It might have been 10 an hour, or something like that, I would offhand judge, but that is just a guess. It comes from my general knowledge of what I know of the operation; not from my recollection.

Q. And, it wasn't until after the War, as I understand it, some time in 1919, that you got in mind the possible change in the shaper to take care of the work? A. Yes.

Q. In other words, two or three years after you started making the tractor? A. Yes, possibly two years after that.

Q. But nothing was ever done with the suggestion? A. No.

Q. When did you first see or have anything to do with this so-called attachment shown in Exhibit 257? Do you know what I **(2175)** mean? A. This here?

Q. No; this shown in crayon (indicating). A. Sometime last fall Mr. Farley showed it to me, and Mr. Brush.

Q. You had never seen anything like that prior to that time? A. No.

Q. In order to load the machine of this Exhibit 268, I understand that it would be necessary to raise all these toolholders up? A. Yes.

Q. And that you do, you would raise them all up as a unit, is that it? A. As a unit, the same as we do on the other.

Q. And in addition to that you would have to have a special mechanism for alternately raising and lowering every other tool? A. Yes.

Q. During the actual cutting? A. Yes.

Q. And, this cam C here in Exhibit 269 is the cam—let me ask you, first, is there one of those cams C for each tool? A. For each tool, yes.

Q. And, the purpose of that cam is to permit the toolholder to have a relieving stroke? A. It takes the place of the clapper box on an ordinary shaper or planer.

Q. So that with every cycle of the machine that cam would allow the tool to raise, and would later allow it to be lowered and take a cut? A. Yes.

(2176) Q. And there was nothing like that in your old machine, was there? A. Not the same construction. In the old machines the tools were raised as a unit.

Q. You have got to have that in this machine, Exhibit 269, too, haven't you? A. No.

Q. How do you raise the tools as a unit in the machine of this drawing? A. You could do that by an eccentric bushing the same as we had to do that; that was additional on the old one from the relieving mechanism.

Q. Do you mean to say whatever you used in this machine Exhibit 269 for permitting all the tools to raise as a unit corresponded to the raising of the tools as a unit in the other machine? A. Yes.

Q. More than this cam C corresponded to that? A. The cam C has nothing to do with raising all the tools, I mean as a unit.

Q. No. Well, therefore, there is nothing in the old machine, or was nothing, corresponding to the cam C? A. Yes, there is; there is a relieving cam.

Q. But that permitted the tools all to go up? A. It is not used for that purpose.

Q. In the old machine? A. It is not used for loading the machine.

Q. You mean the cam C in this drawing, 269, isn't used for loading? **(2177)** A. And, the cam C, the corresponding cam C, is not used in the old machine for loading.

Q. But, it is used for raising the tools as a unit? A. Used for raising the tools as a unit for relieving the tools on the work stroke only.

Q. I think we understand one another. In the old machine there was one eccentric, is that right, on a shaft, similar to the shaft on which the cam C is mounted? A. On the old machine there is one eccentric on the pivot of the first machine, on the pivot of the arm for the relieving arm, and there was also a set of cams alongside of it that do the relieving of the tool on the back stroke.

Q. A set of cams? A. I should say there are two cams. It actually acts as one cam. We have two cams. Here we have a spring, and with the old one, there are two cams side by side for going down and up.

Q. And the two cams act as one? A. And the two cams act as one.

Q. And operate the whole head up and down? A. And operate the whole head up and down.

Q. Whereas, this cam C in Exhibit 269 is peculiar to each tool-holder? A. Peculiar to each tool-holder.

Q. And each cam independently operates its own tool-holder? A. Yes.

Q. And has nothing to do with the head going up and down? A. No.

Q. For the head going up and down you have a separate mechanism in this machine of Exhibit 269? **(2178)** A. Yes.

Q. And, that isn't in the old machine? A. To move the head up?

Q. And down? A. For loading. There is a mechanism in the old machine for moving the head up and down for loading.

Q. Was that a hand operation? A. As I recollect, that is a hand-operated means.

Q. And that was something in addition to the two cams? A. I can't offhand recollect, but I think that is a hand-operated machine.

Mr. Farley: Do you want to consult your drawings on that, and your photograph?

A. (Examining documents): In the old machine for raising, I think this is the hand wheel here (indicating), that operates this eccentric bushing here. This eccentric bushing raises the tools up for loading purposes, and this cam here operates them for relieving.

Q. (By Mr. Michael, continuing): The two cams for relieving in the old machine were automatically operated? A. They are automatically operated.

Q. But, the raising of the head up and down for loading is by hand? A. Yes.

Q. And, in this machine of Exhibit 269 the cam C, there would be eight of those cams? A. There would be eight of those cams on one shaft.

Q. On one shaft, and they would each operate the corresponding tool-holder for relieving? A. For relieving.

(2179) Q. And, in addition to that you would have what for raising the head up? A. If I built over the machine I would leave this eccentric as it is, and lock this arm in place.

Q. What arm? A. This here. I would lock this arm so it can not move. I keep this shaft stationary, I mean, the cams in position.

Q. You mean you would lock the shaft on which you had these cams C mounted? A. Yes; I would lock them in place.

Q. You would lock them first? A. Yes.

Q. And then operate? A. Then I would operate this eccentric bushing.

Q. You would operate the eccentric bushing by this hand wheel in order to turn the whole head up? A. Yes. That is, if I change over the machine, with the minimum amount of change.

Q. Now, when the tool-holders in the machine of Exhibit 269 are raised, does this plunger, marked R, in the print 269, also move? A. No. This is stationary; it slides on this surface here.

Q. The head of the plunger slides on the head—that is, the head of the plunger R slides on the head of P? A. P.

Q. I think you said in your direct examination that the traveling of the work bed or carriage in the old shaper was the conventional work feed, shaper work feed? A. Yes.

(2180) Q. But, you added that it was slightly modified. In what way was it modified? A. I don't know. After I say that I couldn't think which way it was really modified. Yes, it is modified—that is what I meant; in the conventional machines it is adjustable. This one it is not.

Q. In the old shaper? A. In the regular shaper, standard shaper, it is adjustable. The block on the crank is adjustable in throw, which modifies the lengths of the strokes. That is what I meant.

Q. When did you first discuss this thing that is shown here in this Exhibit 269 with Mr. Farley? A. Last fall sometime; I don't remember the date.

Q. And did you do anything with reference to the idea from the time you first got it up to the time Mr. Farley talked to you about it? A. No, not since 'way back; I was not in a position.

Q. I think you said in connection with Exhibit 269 you would have to have a bracket to hold something or other. I just didn't understand that. A. Well, I mean there is a plate in front of here that has to incorporate, you might call it a bracket, you know, or housing to mount this shaft in.

Q. You mean a plate in front of the tool-holders? A. That has to be ground with a bracket cast on there to carry this shaft and those slides.

Q. To carry the shaft that carries the cam C? A. Yes.

Q. And, also, the plunger R? **(2181)** A. Yes.

Q. And all of that structure that you just described, as being out in front, would be stationary with respect to any movement up and down while the rest of it would have to be movable? A. It is stationary with regard to the relieving mechanism, but it would go with it on the loading.

Q. Oh, on the loading and unloading, when you move the whole head, then the attachment on the front, as well as the tool-holders, would all go up as a unit? A. It would be as a unit with the present slide; it would be a unit with that.

Q. And, of course, in that respect it would differ from the old shaper, too, wouldn't it? A. Yes.

Q. You had nothing like that in the old shaper? A. There isn't anything in front; no.

Q. And, in the old shaper you had nothing that required an accommodation of parts or mechanism to an independent movement of the tool-holders and the unitary movement of the tool-holders and all the rest of the mechanism? A. Not on the tool-holders, no. There was nothing on there.

Q. There wasn't anything, no requirement for anything like that on the old shaper? A. No.

The Master: Did you ever consider this modified form of shaper for shaping the model T cams, or did you have in mind its use solely on the tractor cam shaft?

A. Well, I was working—I had that in mind, that modified shaper, for any of them, just as well for the model T as for the **(2182)** tractor. That would have been applicable for both, but I was working toward the tractor cam because that is at the time where I was. I was responsible on the tractor.

The Master: Do you consider it would be better for the model T than the shaper that you originally designed?

A. Yes, I would have sped up production. By the cutting speed it would have speeded up at least two to one, and probably increased at least 50 per cent the total production.

The Master: How could it have speeded up two to one?

A. Because the cutting speed is very low on this shaper. The limiting factor is the speed you can move the ram.

The Master: Well—

A. (Continuing): And, the cutting speed can be multiplied by two without damage to the tools.

The Master: Are you speaking now of a modified ram?

A. Modified ram, yes.

The Master: I was limiting it to this.

A. You are referring to this?

The Master: Yes.
Mr. Michael: Exhibit 269.
The Master: 268 and 269.

A. There is no necessity for it on the model T cam shaft.

The Master: You wouldn't consider there would be any advantage in using that on the model T?

A. No, no necessity for it.

The Master: Would this shaper as embodied in Exhibits 268 and 269 be more expensive to build than the shaper for the model T?

A. Yes, it would be slightly higher.

(2183) The Master: Would it be more likely to get out of order and require more maintenance?

A. No, I don't think so.

The Master: Wouldn't that additional mechanism you have for relieving the tools cause complications and be likely to get out of order?

A. No. Those are mechanisms, you know, very commonly used; with the use of the proper materials on there, there wouldn't be any greater maintenance on it. It would have cost more to build, you know, those parts.

Q. (By Mr. Michael, continuing): Mr. Oberhoffken, how much of an investigation did you make back in 1914 and 1915, or whenever you made it, with respect to turning and milling cams? A. Well, it consisted of making layout drawings, you know. There was no other experimentation made.

Q. And, I think you said, in addition to the milling, you considered turning by moving a tool in and out, and tilting the tool? A. Yes.

Q. Did you at that time give any thought to moving the tool in and out without tilting it in an ordinary lathe operation? A. We did.

Q. And what did you conclude about that? A. What?

Q. What was your conclusion on that? A. My conclusion at the time there, you know, by that our clearance angles would have to be such that they wouldn't stand up.

Q. I think you said on your direct examination that in the business here at Ingersoll Milling Machine Company no machines **(2184)** were ever sold on the basis of a royalty of so much a piece on the pieces produced on the machine? A. No machines that I know of.

Q. Do you have any knowledge of that practice in any other industry? A. Well, just in so far, you know—no, I have no knowledge of that being done any place.

Q. You have no knowledge that it is done any place? A. No.

Q. Have you ever had occasion to look into questions of that kind? A. No, I have not.

Q. So that any knowledge you would have would be just knowledge you picked up? A. Picked up.

Q. As you go along from day to day? A. As I go along from day to day.

Q. Did you make any lay-outs when you made your investigation of a machine or method for turning cams with a lathe tool where the tool would just move in and out and not tilted? A. Yes.

Q. You did. But, discarded it as impractical? A. Well, we discarded it as, I wouldn't say impractical—yes, in a way. Of course, we considered the clearance angles, you know, too steep for practical use, for tool life.

Mr. Michael: I think that is all I have.

(2185) Re-Direct Examination by Mr. Farley.

Q. I don't know whether there is any confusion or not, but in the original model T cam shaft shaper you did have a cam, which has been referred to as a cam C, which raised all the tools for relieving purposes? A. Yes, for relieving.

Q. And, in the modified machine, as shown in Exhibit 269, you are still going to use a cam for that purpose, is that right; that is, for relieving? A. For relieving.

The Master: Separate cams?

A. Separate cams.

Q. (By Mr. Farley, continuing): The difference being you would use 8 separate cams? A. Yes.

Q. And, as far as the mechanism for raising the head for loading and unloading purposes, you would employ in your modified machine the same mechanism as was in the original machines, it is my understanding? A. If I used the same machine. If I changed them over, if I made a new machine, I would simplify that mechanism due to this construction here (indicating).

Mr. Farley: That is all.

The Master: If you assume you have the same type of ram, and the same type of metal in both machines, comparing the original shaper with this modified shaper, 268 and 269—

A. Yes.

The Master (Continuing): —is there any advantage or **(2186)** disadvantage so far as speed is concerned in being able, with this modified shaper, to have the backward and forward movement of the work piece constant, whereas it was twice as fast in the forward movement in the old shaper?

A. No. There is no difference. When we made the original shaper, we did not know how fast we could move, and we didn't know what the limitations would be. We didn't know if we could move fast enough so that the cutting speed became our limitation. We did have an advantage in having the cutting stroke go slow and return fast, but as it turned out we could not go quite that fast up to the cutting speed. With this model T here, we increased the cutting speed slightly, but it is far below what is practical. The cutting speed backward and forward is increased above what it is on the original shapers.

The Master: That cutting speed is increased, but the movement of the tools is less rapid than it was in the non-cutting stroke in the original shaper?

A. It is less rapid, but faster than the cutting stroke.

The Master: Is it half-way in between?

A. It is approximately half-way in between the two. If the other one is 2 to 1, it is exactly half-way in between.

The Master: You have exactly the same speed for a complete stroke with both forms of shaper?

A. Yes.

The Master: That is all.

Q. (By Mr. Farley, continuing): That being the case, having exactly the same stroke with each form of shaper, would you, in this modified form, increase the—would there be any increase in the cutting time because your model F cam shaft, or **(2187)** cams, were wider than the model T? A. I wouldn't know exactly how much clearance we had on there. If it is very much wider, it will slightly increase the cutting time if I kept the same conditions all the way through.

Mr. Farley: That is all.

RE-CROSS EXAMINATION by Mr. Michael.

Q. That brings up one more question. I think on direct examination, Mr. Oberhoffken, you spoke of changing one or two of the tools, making them smaller, where you didn't have enough clearance? A. That referred to providing clearance between the cam and the bearing.

Q. Yes. A. And, I was referring I wouldn't have enough room to get those tools in here.

Q. Which tools? A. This kind of tool we have here (indicating).

Q. The one you have shown in this Exhibit 268? A. Yes.

Q. Then, in the use of this machine, Exhibit 268, on an F shaft, what would you have to do to the tools? A. I would have to make a flat tool. As a matter of fact, the way this is shown here, I could almost use another ⅛ of an inch here; I could put another tool in here and use the shaper as it is with the same construction.

The Master: Another eighth of an inch off the center bearing?

(2188) A. Yes. I would put a flat tool in here; the tool in front would look something like that (indicating). I keep the point this way.

Q. (By Mr. Michael, continuing): You are speaking of the old shaper, or this shaper 268? A. Of the old shaper. I would put a tool like that in here, and increase this 1/8 of an inch, and I could use the old shaper with the same construction.

Q. Did that occur to you when the F shaft was first started? A. Yes, it did.

Q. Why didn't you do it? A. What?

Q. Why didn't you do it? A. I didn't think at that time. They wouldn't make that thing shorter; they wouldn't do it.

Q. You had nothing to do with that? A. I had nothing to do with that.

Q. With the design of the shaft or motor? A. That is correct.

The Master: You also said you could make one of the bearings shorter, or you could shorten the cam that was providing the trouble?

A. Yes. They may be able to take it off the cam here.

The Master: Do you have enough knowledge of the operation of an automobile engine to know whether that was a practical method, or were you simply saying from the machine standpoint?

A. I think I have enough knowledge of it that I think it would be practical.

The Master: Wouldn't it make difficulties in the operation **(2189)** of the engine?

A. It would decrease the surface of that, you know, it would decrease the life of the shaft; but, that is just a matter of opinion and study; it is just my opinion it could be done. Others might disagree with that. It was evidently the opinion of them, because they wouldn't do it.

The Master: Did you actually ask the engineering designing department—

A. (Interrupting): I can't recollect if I actually did or not. I think we might have talked about it. We did not very much at that time at Ford Motor Company interfere with that, you know.

The Master: You didn't go on—

A. (Interrupting): I will make this statement. I am not saying I did think of doing it that way.

The Master: You don't know whether you were given to understand at the time then or not that the engineering department would not cut off part of the center bearing?

A. They may have given that ⅛ of an inch, if I had thought of it at that time, and considered using that kind of a tool.

Q. (By Mr. Michael, continuing): According to your recollection now, the idea didn't even occur to you at that time? A. To use this tool at that time? I don't think it did; no.

Q. And, if you had, you said a minute ago, as I understood you, you did not think the engineering department would have okayed any changes in the shaft anyway? A. That is it, because there is no object to that flat tool, it makes different kinds of tools, which is very objectionable from the tool handling standpoint.

(2190) Q. You mean the flat tool would have been objectionable? A. Yes.

The Master: You couldn't have used all flat tools?

A. They would have been more expensive.

The Master: Would they have lasted as well?

A. No.

The Master: Tool life?

A. No, the tool life would have been shorter. The total cost of tool life and everything, this would have been more practical.

The Master: By "this" you are referring to Exhibits 268 and 269?

A. Yes.

Re-Direct Examination by Mr. Farley.

Q. On the proposition Mr. Michael asked you just why you didn't make the tools as you suggested, and use the shapers on the model F shafts. Well, now, could you, when you take into consideration the size of the model F shaft, as compared with the model T shaft, the spacing of the

cams, and the width of the cams, could you have used the same physical machine that you used on the model T for the model F? A. No, not without changing the front castings.

Q. Front castings. You would have to modify your drive also? A. Yes.

Q. To increase the stroke? A. Yes.

Q. And, wouldn't you have had to put a longer bed on the machine to **(2191)** accommodate this shaft? A. I probably would have. I wouldn't know without looking into it. You probably would have had to put a longer bed in there. We might have been able to set the end brackets out.

Q. In so far as the model F production is concerned, it would have involved building up a new machine for model F? A. Yes, absolutely. We wouldn't have considered using this for model F production.

Re-Cross Examination by Mr. Michael.

Q. You mean the old shaper? A. As it was.

Q. Even though you made it larger, you wouldn't have considered it? A. I didn't get that.

Q. Even though it was merely a question of increasing the size and dimensions of it, you wouldn't have considered it for the F shaft? A. Well, we would have made it large enough for the F shaft, and at the same time we would have made those modifications on it.

Q. That you now speak of? A. Yes.

Q. And shown in Exhibits 268 and 269? A. Yes.

Q. But, you wouldn't have considered just enlarging the old shaper and using it as it was for the F shaft? A. No.

Mr. Farley: Will you state why you would not have **(2192)** considered taking one of the old shapers and trying—

A. (Interrupting): For one of the reasons, they used them all. We didn't have any available. We didn't have any shaper available, anyhow. They were all being used on model T production.

Q. (By Mr. Michael, continuing): I meant, even though you increased, you laid it out from an engineering

standpoint on the drawing first, and increased all the dimensions and sizes so as to accommodate the F shaft? A. Yes.

Q. You wouldn't even have considered building one of those machines for the F shaft? A. I would have put those modifications on it like this here.

Q. Like 268 and 269? A. Yes, sir.

Q. You wouldn't have considered just enlarging, building a new enlarged machine to take in that shaft? A. No. I would not have done this thing for the simple reason of tool life. This modification of the tool life only—if I had a shaper I would do it.

Q. Even, then, if you had to use an old shaper enlarged to accommodate an F shaft, you couldn't have done the job, could you, for the F shaft, without moving bearings or cams, or something? A. Not without moving the work-holding means, not without changing that.

Q. And not without giving more clearance between the bearings and the cam? A. Not without getting more clearance.

(2193) Q. And, the only way you could get that more clearance was to change the shaft? A. Change the shaft.

Q. And that all comes back to the point that merely an enlarged old shaper to accommodate an F shaft wouldn't have cut the shaft? A. It wouldn't have.

Mr. Michael: No. That is all.

The Master: Suppose you had a shaft of exactly the same shape as the model T shaft, but a larger shaft, both larger cross sectionally and also in length, but with proportions exactly the same, and you built a machine similar to the original shaper to machine the cams on that shaft—

A. (Interrupting): Yes.

The Master (Continuing): Would it take you longer to machine that shaft than it would the original Ford T shaft?

A. The machine would have been enlarged—it would have taken longer.

The Master: How would you figure the extra time, machine time it would take, to machine such a shaft?

A. The machine time is a part of it. It would have been proportional to the greater length of the shaft, of the bearing here.

The Master: Also, would the greater periphery have anything to do?

A. Not so much, because the periphery was, it was largely a factor of deflection of the shaft due to the fact the shaft was stiffer. I probably would have been able to take a heavier **(2194)** chip.

The Master: But, the time would have been increased in proportion to the greater length of the cams?

A. Yes. If the machine had not been changed in any other respect which, of course, I would have done. I would have incorporated that lighter ram.

The Master: Disregarding this question of modification in the ram, would the machine time have been increased in exact proportion to the greater length—or, rather, width of the cams?

A. No.

The Master: Your accelerating and decelerating time—

A. (Interrupting): The machining time would have been increased in that proportion.

RE-DIRECT EXAMINATION by Mr. Farley.

Q. You are figuring on keeping the same cutting speed, is that the idea? A. Yes, keeping the same cutting speed, based on using the same cutting speed.

Mr. Farley: Would you mind reading the last question and answer of Mr. Michael and Mr. Oberhoffken?

(The Reporter (reading): "Q. And, the only way you could get that more clearance was to change the shaft? A. Change the shaft.

"Q. And, that all comes back to the point that merely an enlarged old shaper to accommodate an F shaft wouldn't have cut the shaft? A. It wouldn't have.")

(2195) Q. (By Mr. Farley, continuing): Mr. Michael there asked you the question that merely an enlarged old shaper, enlarged old model T shaper, enlarged to cut the F shaft, would not cut the shaft? A. The tractor shaft.

Q. The tractor shaft? A. Yes.

Q. Just why wouldn't it have cut the tractor shaft? A. Because there wouldn't have been enough clearance to get the tool in there.

Q. Oh, I see. That is what you have in mind? A. Yes.

Q. That involved some change in the bearings? A. Yes.

* * * * *

(2196) HENNING OHRN was thereupon called as a witness on behalf of the Defendant herein, and having been first duly sworn, testified as follows:

DIRECT EXAMINATION by Mr. Farley.

Q. Your name, please? A. Henning Ohrn.

Q. Where do you live, Mr. Ohrn? A. 5948 South Campbell Avenue.

Q. And, what is your occupation? A. General Foreman.

Q. By whom are you employed? A. International Harvester Company, the tractor works.

Q. How long have you worked for International Harvester? A. 28 years.

Q. In connection with your duties at International Harvester, did you ever have anything to do with the cam shaft department? A. Yes. In 1919 to 1922 I was in charge of that department as a foreman.

Q. How was the International Harvester Company machining the cams **(2197)** of the cam shafts when you went into the department as foreman? A. Well, I was there when they started. We first rough grind the cam shaft on a Norton grinder, and then we finish grind them, second operation, on a Norton grinder.

Q. Did you at that time endeavor or attempt to change over from rough-grinding to any other type of machine? A. We never did up to the time that this Gordon machine came in. I didn't have any—we didn't make

any attempt to do anything else than rough and finish grind the cam up to the time the Gordon machine came in.

Q. When did the Gordon machine come in? A. That was in early 1920.

Q. I asked you to see, to produce certain records of the company that had to do with that Gordon machine. Did you succeed in getting those? A. Yes, I went yesterday and got those records (producing documents).

* * * * *

(The two documents above-referred to were thereupon marked Defendant's Exhibits 306 and 307, respectively, by the reporter.)

(2198) Mr. Farley: The installation card will be 308.

(The document above-referred to was thereupon marked Defendant's Exhibit 308.)

Mr. Farley: And, the disposition card, 309.

(The document above-referred to was thereupon marked Defendant's Exhibit 309 by the reporter.)

Q. (By Mr. Farley, continuing): Now, you have produced a requisition or number of papers. I would like to ask, first, are these records regular records of the International Harvester Company? A. Yes, sir.

Q. And, you got these from the files of the International Harvester Company yesterday? A. Yes, sir.

Mr. Farley: I offer in evidence Defendant's Exhibit 306, which is a requisition for one Gordon cam turning machine, dated November 20, 1919. (Presenting document to the Master.)

As Defendant's Exhibit 307, a letter constituting an order for a Gordon cam turning machine, which is dated November 24, 1919. (Presenting document to the Master.)

As Defendant's Exhibit 308, a record card of the International Harvester Company entitled "Installation of Machinery," which has the name and description of machine made by Charles Gordon, Inc., and purchased from Charles Gordon, Inc., date installed, April, 1920. (Presenting document to the Master.)

And, as Defendant's Exhibit 309, another card of the International Harvester Company entitled "Dis-

position of Machinery," which has a date stamped August 11, 1927, and up at the top a date which is not very legible. It looks like 8/30 or 6/30, **(2199)** 1927 (handing documents to the Court).

Mr. Michael: I think you referred to this purchase order as 308 just now. There seems to be some confusion over what you had identified the exhibits as.

Will you read the offer of those exhibits, please?

(The offer of the exhibits by Mr. Farley was thereupon read by the reporter.)

Mr. Michael: All right. I object to the materiality.

The Master: You don't object to the identification of them as a record?

Mr. Michael: No.

The Master: I think I will reserve a ruling on the objection, and you can go ahead and examine on them as though they were admitted in evidence.

Q. (By Mr. Farley, continuing): Now, this machine, this Gordon machine, which the records of the company show was received in April, 1920, did you have anything to do with that machine, Mr. Ohrn? A. Yes. I was in charge of that department. At that time I hadn't been foreman very long. I just came up as a set-up man, supervisor, and I started the machine off. That is the first thing I always did, because I wanted to be acquainted with the machines as they came in new. I started the machine up, and I remember very well one thing what happened, and that was the circular tool broke on the cam, on the nose of the cam.

I reported this to Mr. Lander, Mr. Charlie Lander, and he came up and looked at it, and we took out the cap screw that held the tool, and we had several tools on hand which **(2200)** were with the machine, and put in another one, and we made a shaft or two.

I can't remember all the details exactly there, but we were not successful on making a good shaft. The tool bothered quite a bit, so Mr. Lander told me to put a man on there, a good mechanic on there, and see if he couldn't work that out.

So, Mr. Kipta, who is out in the other room—Mr. Lander is a master mechanic, and we worked together, of

course, both the assistant foreman, Mr. Kipta, and myself, trying to make this machine go, but we were not successful.

So, I had to report to Mr. Lander again about the difficulty we had, and he told me, "Well, I will call in an expert on the job."

So then, we went off the machine probably, I can't remember, but it was probably a week when one of their men came in. This man's name, I don't remember his name; we have had so many experts in there, and he tried to make it work. Well, he succeeded to get the tools to stand up so they wouldn't break off, but we had the trouble that when the cam comes down to the tool, it made a hollow, and as it turned over, we made a lump.

Q. That is, it made a hollow on the side of the cam as the side of the cam was approaching— A. (Interposing): That is right.

Q. (Continuing): —the tool? A. The tool.

Q. The nose was approaching the tool? A. Yes.

(2201) Q. And, made a hump on the far side? A. Yes.

Q. You said one of the men came in, an expert, was that somebody from the Gordon Company, or representing Gordon? A. Yes.

Q. How long did you work with this Gordon machine in attempting to use it in the International Harvester plant? A. Well, off and on, we were on there trying to make it work for about three months. I wouldn't say, I wouldn't be sure that that was three months on the date, but pretty close to three months.

Q. And, what success did you have? A. Well, we were not successful. This Mr. Charlie Lander is an exceptionally good mechanic, and he bought the machine, and if he could have made it work, I tell you, he would have absolutely. He had rebuilt so many machines over there that didn't work, and this is the only one he failed on.

Q. Could you state whether or not in the three months you had the machine you succeeded in turning any satisfactory or usable cam shafts? A. Not so that we could send them to our hardening department and take them back. They were too heavy. We would have ground off all the hardening, all the carbonizing and hardening, and that was a soft spot there. So, we didn't even try that.

We did try, however, to make the machine pay for itself, or work, by taking a rough cut on this machine, and then grind it on the Norton grinder, finish it up, but it wasn't successful **(2202)** for the reason that the two prices, we had piecework prices, the two prices became higher than the one to rough grind, because we had to handle the shaft twice.

Q. That is, the cost of the rough grinding, and the Gordon machine, the way you attempted to use it, was even more expensive than doing the whole job on the grinder, is that the idea? A. Yes, sir.

Q. Now, you say you worked for about three months with the Gordon machine. What did you do with the machine after three months were up? A. Well, Mr. Lander had it on the side. He moved it out of our department. He had it in the department, and if he intended—if he made an attempt to make it work by changing anything, I don't know. It was moved out of my department and stored in what we call the No. 1 warehouse.

Q. After you moved the Gordon machine out into the No. 1 warehouse, did you still continue to be in charge of the cam shaft department? A. Yes, for about two years.

Q. What did you then use after you moved the Gordon machine out into the warehouse? A. We went back to the old grinder; rough grinding, and finish grinding.

The Master: Are you still using the rough grinding method for machining cams?

A. No, not now.

Q. (By Mr. Farley, continuing): What method are you now using? A. We have two machines up there; two cam turning machines.

(2203) Q. What type of machines are they? A. Melling.

Q. How long have you had those machines? A. I wouldn't answer that. I couldn't be fair there, because I wasn't in charge of it when they came in, so I don't remember. I haven't looked up the record on that.

Q. You were not in charge when the Walcott machines came in? A. No. Mr. Hajovich was in charge.

Q. Now, I asked you to produce drawings of the International Harvester Company that would show the construc-

tion or type of cam shaft that was in use at the time, used by International Harvester at the time the Gordon machine was purchased. A. Yes. I was in the engineering department, and got the two tracings. This one here (indicating) was never used on the Gordon machine; only this one here. We only had one. This came in later on, and the Gordon machine was out then.

Mr. Farley: I will have this marked Exhibit 310.

(The document above-referred to was thereupon marked Defendant's Exhibit 310 by the reporter.)

Mr. Farley: And, we will mark the second blue-print, Exhibit 311.

(The document above-referred to was thereupon marked Defendant's Exhibit 311 by the reporter.)

The Witness: You asked for one more tracing, but that is out at Fort Wayne, but you have the same cam enlarged there as you asked for this tracing here. That is out in Fort Wayne.

Q. (By Mr. Farley, continuing): Now, you have produced two **(2204)** original tracings from which tracings these blue-prints, 310 and 311, were made? That is, these are blue-prints of the tracings? A. Yes.

Q. And, Exhibit 310 is a blue-print of the shaft that the International Harvester was then manufacturing, on which you attempted to use the Gordon machine? A. Yes, sir.

Q. This blue-print, Exhibit 310, does not contain any detail showing of the contour of the cam? A. Right in here (indicating).

Mr. Farley: Well, the witness pointed to a set of views on the upper part.

Q. (By Mr. Farley, continuing): The drawing, Exhibit 311, does contain down in the lower right-hand, or left-hand corner, an enlarged showing of the cam contour? A. Yes.

The Master: This Exhibit 310, you have two different styles of contour of the cam and shaft; four of them are much more blunt on the lift than the other four (indicating).

A. Some of them are. This cam is exactly the same there (indicating). This is exactly the same.

Q. (By Mr. Farley, continuing): You mean the cams on the two prints are exactly the same? A. Yes. This one here—it is the same also; 22 degrees.

Q. The exhaust cams have a blunter or more rounded nose than the intake cams? A. That is right. The only difference in this shaft is, this is cut off here (indicating); not used any more.

(2205) Q. The only difference between the shafts shown in Exhibits 310 and 311 is that in the shaft shown in Exhibit 310 there was a reduced part with a threaded end on the left hand— A. (Interrupting): I wouldn't say that is the only thing. I haven't checked them. But, as far as the cam is concerned, they are all the same.

Q. As far as the cam contour is concerned, they are all the same? A. Yes.

Q. Now, the showing, the enlarged showing of the cam contours, which is entitled, "Cam outline enlarged four times," shows on the right-hand side of the view the contour for the intake cam and on the left-hand side the contour for the exhaust cam? A. That is right.

Mr. Farley: I will offer the blue-prints as Defendant's Exhibits 310 and 311.

Mr. Michael: Same objection; they are not material.

The Master: Subject to that objection, on which I will reserve a ruling, I will admit these exhibits.

Q. (By Mr. Farley, continuing): Now, were you interested in the International Harvester plant in making or trying to make this Gordon machine work? A. Oh, yes, certainly.

Q. And, as I understand it, there was a substantial investment there; the machine, according to your records, cost the International Harvester Company some $5500. I don't remember what the exact figure is. (Examining document.)

The total cost of the machine to your company was $5444.33, as **(2206)** shown by these records? A. That is right.

Q. Who, besides yourself and Mr. Lander, did you have working on that machine trying to put it in satis-

factory operation? A. Mr. Kipta and Mr. Charlie Hajovich.

Mr. Farley: I think that is all. You may examine.

The Master: Did you have any different experience in turning two different styles of cam, the exhaust cam and the intake cam?

A. The intake cam is the hardest to turn. This pump eccentric would be very easy to turn; you would have no difficulty with the pump eccentric. Even the pump, Gordon would turn that. But, the intake cam, that would be impossible, and we had trouble here, too.

Mr. Farley: "Trouble here, too," you mean with the exhaust cams?

A. Yes. It left too big a hole here to allow us to use the machine. We would have to grind off too much to come down to the surface, and too big of a lump, and so if you send it down and carbonized it, then we ground off all the carbonizing, and then you would have a soft spot.

Mr. Farley: And, if you had a soft spot in your cam shaft, would that be a usable shaft?

A. No. It would not pass, pass our inspection.

Mr. Farley: All right. You may examine.

(2207) Cross Examination by Mr. Michael.

Q. Did you have anything to do with the purchase of this Gordon machine? A. No, that is altogether up to Mr. Lander.

Q. Did you see a Gordon machine working in any other plant before it went—before you bought the one for your plant? A. No, sir.

Q. Did you see a Gordon machine in any other plant at any other time? A. No, sir.

Q. Do you remember any trouble in the turning of the pump eccentric on this Gordon machine? A. No.

Q. You had no trouble at all? A. No.

Q. It turned that right from the beginning? A. That turned.

Q. That is your recollection of it? A. Yes.

Q. Do you remember having any trouble with the timing of the cams after they were cut on the Gordon

machine? A. No, I can't say we have any trouble there, because we ground them afterwards, and when we checked the cam, it is always corrected then to the key-way in the grinding.

Q. But, if the timing was off in the Gordon machine, your grinding wouldn't help you very much? A. We had to leave some stock on. It was determined it was just as well to grind them from rough, because we had to leave so **(2208)** much stock there. We tried to make the Gordon machine pay for itself. Mr. Lander was very anxious that it should work. So, if it would have paid for itself by taking the rough cut, and then just taking the finishing cut on the Norton grinder, we would have used the three machines, rather than the two. So, if it is off, we didn't check that. We don't check them before they are finish ground, because they always twist a little in hardening. I couldn't tell you if it was off or not.

Q. You don't remember any trouble in that connection? A. No, we wouldn't have any trouble, because we left so much stock for the few shafts. We probably made about 200 good shafts at that time that we were able to grind. The rest of them we, probably, had 75 or 80 scrapped because the tools broke off; like I told you to start with, they often broke off the tool, and then took off the nose of the cam.

Q. What was that due to, a spring breaking, or something of that kind? A. It seemed like the ratchet in back of the tool was not deep enough, so when the cam came over there with the nose, it was too powerful, the cam moved the tool, and that moved it from the sharp point, and turning into the roundness of the tool, it just broke off the set screw that held the disc on.

Q. You say the ratchet was not strong enough? A. Well, we probably could have overcome that by using deep ratchets. It would have been a better hold there.

Q. Did you try to overcome it that way? A. I can't remember if that was tried or not. The principle of the machine would never work, even if you would have been able **(2209)** to overcome this, this difficulty of holding the tool. That Mr. Lander would easily have been able to overcome.

Q. But, as far as you know he never tried to? A. Of course, we didn't like to scrap the shafts. We were

trying, naturally, different bolts or cap screws to hold the tool. They were hardened. We were trying to get them tougher, rather than to get them hard. First one broke. We tried to make a set screw that would hold. Then, we had, if I remember right, about a dozen tools—it probably shows in the record; I didn't look that up—I remember some quite a few tools came in with the machine, and we would have been able to make new tools, and the hole larger, and the cap screw larger, and we would have been able to overcome that; but, the outline of the cam on the nose, on both sides of the nose, that we would never have been able to overcome, except the machine was rebuilt and changed. I couldn't go into that detail because I don't know enough about the action there to tell you. I have my own opinion, but that would be just a workman's opinion.

Q. You mean you did not know enough about the action of the machine, or the way it is operated, to suggest how to change it? A. Well, I personally have my opinion about it, if you care to hear that I can tell it to you, but that wouldn't mean much.

Q. Did you work on the machine yourself? A. Yes, sir.

Q. Did you attempt to make any changes in it, or make any suggestions? A. No, we are not allowed to make any changes. We are allowed to **(2210)** suggest any changes we make.

Q. How many men did the Gordon Company send in? A. Two; they were in twice.

Q. How long did he work on it? A. I would say the first time he was in a week, about; it might be four or five days.

Q. At the end of that week didn't he turn some pretty good shafts on the machine? A. He turned shafts that we were able to grind, but not that we were able to send down to harden.

Q. Did you try to do that, turn some close enough so that you could send them to harden? A. Yes. We tried to take two cuts on the Gordon machine, but it was the same result.

Q. Did you ever operate the machine to take two cuts? A. Yes.

Q. How did you do that? A. We just took them out and started over again, just like you would turn two cams.

Q. You only had one machine? A. Yes.

Q. You put a shaft in and cut across the cams? A. A. Yes.

Q. And then took the shaft out and put it in again? A. We made 5 or 6 shafts, and then we set them in again and took another cut.

The Master: Without any readjustment of the tool?

A. Oh, yes, we had to move up the tool, then.

Mr. Farley: Readjust the tool for the second cut.

(2211) A. Yes.

Q. (By Mr. Michael, continuing): Tell me how you did that with the Gordon machine. A. I couldn't remember just what we did, but we attempted it.

Q. You attempted it? A. Yes.

Q. Did you do it? A. I think we did.

Q. How could you adjust the tools on the Gordon machine to take a second cut? Are you familiar with the machine? A. Yes, I am. That is, I was at that time. It is 20—it is quite a long time ago.

Q. You are sure you cut once across the shaft, and took the shaft out, and then you adjusted the tools and put it back, and took another cut. You are sure you did that? A. Yes. As well as I can remember. Yes.

Q. But, you don't know how you did that? You don't know how you adjusted the tools? A. I can't remember that; no.

Q. How much of a cut did you take the second time? A. We attempted to take enough to make a very light load on this tool here. This shaft here is quite springy, and you will find, if you turn that twice, even adjusting it, without adjusting it you will find you take another cut anyway on it. If you have a Gordon machine anywhere in the country, if you take this shaft—

Mr. Farley (Interposing): Referring to Exhibit 310.

A. (Continuing): —if you take a shaft here, there is enough (2212) spring on the Gordon machine on their arms

there,—you take one cut over, you will find how to take another cut there, your tool will cut.

The Master: You mean without a readjustment?

A. Yes.

Q. (By Mr. Michael, continuing): Is that what you mean, or did you mean you adjusted the tools? A. I can't remember what we did there, but you will find that is the truth. It is true even with the machine we have today.

Q. There would be some spring in the shaft, too, wouldn't there? A. Yes.

Q. So that in any turning operation on a job of this kind, if you took another cut without any readjustment, you would take off some metal? A. On some, yes, that is true.

Q. Did you work at all with the Gordon men when they came in to make the machine work? A. Yes, we were around him, sure. We had toolmakers up there, and whatever he asked for we did. The second time he was in, I remember the rollers in back of the machine there that were operating on the cam, there were three or four of them, there was also a flat spot on, and we had to stop them for a few days in order to get new rollers in.

Q. What would occasion a flat spot on a roller? A. That seemed to be the hammering action of the spring and the cam. It seemed like when the cam came to the nose where it was going to pull out the tool, and then came in again, it was a sharp hollow in the cam, and that jumped over there.

It didn't seem like it followed that quick enough, and it **(2213)** jumped over, and that is what we thought made a lump there, and I imagine it just jumped there all the time.

That machine was just like an air hammer, and, of course, we thought probably those rollers were a little too soft. So we waited until we got new rollers, and then we put them in, but we had the same trouble on the nose of the cam. That was always our trouble.

Q. Don't you think that was due, to some extent, to weak springs? A. No, my opinion is that it was due to the tipping of the tool there. You have that action right in front there, and also, if I remember right, the cam coming this way, that pulls out the tool. It is probably much sharper here.

When the rollers came here (indicating) it was going to pull out the tool from the nose of the cam, pull it away from here, and then when it went over there it didn't have time to follow that; it just jumped from here to here, from the nose to here (indicating).

Q. Which way are you drawing there, the cam that controlled the in and out of the tool? A. No.

Q. The tilting movement.

The Master: Perhaps you better make this clear on the record. The figure you have drawn over in the right here is the cam being cut?

A. That is right.

The Master: Suppose you mark that "C," and this cam here is the one that controls the oscillating movement of the tool?

A. That tilts the tool, yes.

The Master: Call that "M."

(2214) A. It is an arm coming up. This was a little higher. The arm come up here with the roller on, and it was, where the tool was in here, it had a ratchet on here, and another ratchet here, and this arm coming over here with the roller.

Mr. Michael: Instead of referring to that sketch, why didn't you look at this enlarged print of the tool unit marked before Judge Tuttle as Exhibit 47-A?

Mr. Farley: I wonder there if I might have a question. Do you recognize the machine shown in those drawings, which are marked Exhibit 47-A?

A. Yes. I recognize that.

Mr. Farley: As what?

A. This is the arm—

Mr. Farley (Interposing): I am talking about that as the Gordon machine.

A. Gordon machine.

Mr. Farley: All right, go ahead.

Mr. Michael: Now, which cam are you referring to?

A. This large cam here.

Mr. Michael: 44.

A. This one here.

Mr. Farley: That is No. 44?

Mr. Michael: Yes.

Mr. Farley: Now, Mr. Ohrn, please, as we are talking here, as you go on you will notice all these parts are numbered.

A. Yes.

Mr. Farley: So, you can just refer to the numbers.

A. All right. I was talking about the cam 44.

(2215) Mr. Michael: Now, what is your idea of what was wrong?

A. When this cam came down—the roller came just about here.

The Master: You are referring to about a half-inch from the point?

A. This roller 53 came just about up to here (indicating). This cam 18.

The Master: Up to here, you mean up close to the highest point on the master cam?

A. This way, just about to the highest point. This tool 37, and the cam 18, would be about here (indicating).

The Master: You mean just—

Mr. Michael (Interposing): Nearest the highest point on the work piece 18.

A. Yes. And now, anyone familiar with the turning tool knows if you tried to pull away that tool you have a little difficulty; so, naturally, that tool, having only a spring, trying to hold it back—

Mr. Michael (Interposing): What spring holds it back?

Mr. Farley: Which spring operates this carriage?

A. This one here, 47.

Mr. Farley: That is a screw, isn't it?

Mr. Michael: Just let the witness go ahead.

The Master: Let him continue.

A. This might be the spring here, 50. That holds the—that operates this arm here.

Mr. Farley: That is the arm 23?

A. That is right.

Mr. Michael: Well, then, this cam 44 you have been talking **(2216)** about has nothing to do with moving the tool in and out, did it?

A. Yes. When this cam here turns down here in this direction of the arrow, then this here lifts up this arm here.

Mr. Farley: The arm 52?

A. 52, that is right. And that, when that gear pulls down that lifts up the tool.

Mr. Michael: That does what?

A. That tilts the tool this way.

Mr. Michael: Yes.

A. And, when this tool comes up to here, or the cam comes down to the tool point, they meet there, and that is where we have the hollow spot. Then, the quick action of this roller here—

Mr. Farley: Roller 53.

A. Roller 53 has to follow this.

Mr. Michael: Up over the high point of the cam 44?

A. Yes, to get in here (indicating) on the cam 18.

Mr. Farley: Get into the nose of the cam.

A. On this side of the nose. Then, we had a lump. And, I always figured it didn't have time; what it should have, if this roller would have had another groove here, so that it couldn't have gone away, but had to follow it, something might have broken, but it had to do it. This is pretty quick acting, and I always figured it wasn't fast enough. This action was too fast for the rollers. It just jumped over to here, and left a lump here. That is my idea of it.

Q. (By Mr. Michael, continuing): Well, now, let us follow that a little farther. In order to make a hollow in the side of the cam you are cutting, wouldn't it be necessary that the tool **(2217)** move inwardly? A. No, not necessarily.

Q. Doesn't the point of the tool define the contour that you are cutting? A. That is correct, but if you had ever so little spring in on these places here, if you have ever so little play there, you will always find that will have a hard time to pull out.

Mr. Farley: The tool.

A. The tool would have a hard time to pull out, 37, and it will be natural to want to follow this radius.

Mr. Farley: You mean the circular—the witness is indicating the circle to indicate the base circle of the cam.

Q. (By Mr. Michael, continuing): What in this machine prevents the tool from following the base circle? A. Any little play in all these joints and any little play in this gear, which you will find you have in every machine, that is only my idea now. Somebody else might have another one. I know that we had a hollow spot there, and we had a lump there. That is all I know about it.

Q. But, is it your view that the thing that occasioned that was this roller 53 on the cam 44? A. Yes, because of the fact you would have to pull away from there.

Q. What do you mean "pull away"? A. Pull away from the cut. This always had to tilt there, and you had to go away from this circle here and go straight.

Q. But, the cam 44 had nothing to do with the going away from the circle, did it? A. Well, I don't know. It had the action of tilting of the tool.

Q. But not any movement towards and from the axis of the work, **(2218)** did it? Or, so you understand, that the cam 44 did both tilt the tool and move it back and forth? A. No, sir; absolutely no. This here only tilted the tool. This here.

Q. On what point did the tool tilt? A. The tool was fastened here with a little set screw right there, or cap screw.

Q. Did the tool tilt on that point, the point where you put your pencil? A. No. I am trying to find where it did, but I can't see it here where this slides just like in a little—

Q. (Interposing): Segment? A. Yes.

Q. Groove? A. Yes.

Mr. Farley: Track.

A. Whatever you want to call it.

Mr. Farley: You mean this here, you are pointing to the tool-holder 34?

A. Yes.

Mr. Farley: Sliding in a track.

A. Sliding in a track, yes.

Mr. Farley: Or guideway?

A. Now, then, you have the same condition here as before. You will find the natural way of the tool there and the cam shaft is to turn it around. It isn't natural to go in and out, so whenever it comes here the springing of the shaft naturally would have a tendency of holding it stiff to start with, but finally it had to give a little.

(2219) Q. (By Mr. Michael, continuing): The shaft would? A. The shaft would, and any play you would have in all these different places would have the same thing.

Q. In the machine you have out there, did any of these springs break? A. Not that I remember. We had most of the trouble with the tool. This little cap screw broke off, and sometimes the ratchet in back there seemed like it wasn't strong enough, so sometimes that turned, and this part turned around, and it acted just like two rollers would, and that took off—the width of the tool, if I remember right, was about 3/8, and that took off the whole nose of the cam.

Q. You weren't able to turn any shafts which were worth saving on this machine, is that right? A. They were salvaged. About 200, I would say, would be salvaged. Maybe 60 or 70 were scrapped altogether.

The Master: Were those 200 that were salvaged, were they salvaged before or after you started to take a thin cut with a rough-grinding operation afterwards?

A. They were salvaged on the Norton grinder just like you would do. We tried to grind after we have turned it.

The Master: Did you get any successful shafts? Were you able to salvage any shafts before you started trying to use the machine in conjunction with a rough-grinding operation?

A. No.

Q. (By Mr. Michael): Did you ever put the machine in production, or attempt to? A. No. We never put a piecework price on the job. First we, what **(2220)** we call, take out the bugs of any machine, and when it operated 2 or 3 days satisfactorily, then we call the time study and take a time study on that job, and the man receives a piecework price. Up to that time he is paid a day rate.

Q. How long after the machine first came in did you decide you couldn't do anything? Did that develop the first day? A. The first day like I said—first, of course, we oil up the machine and look it over to see if everything is O. K. in shipping. Then, if we think everything is O. K., we start up the machine and let it operate for about, oh, 20 minutes, or an hour. It all depends on what type of machine it is. If it is a drill press, we don't do that, but if it is a complicated machine, we let it go up and down—

Q. (Interposing): Just limit your remarks to what you did with this Gordon machine. A. That is exactly what we do with the Gordon machine, like we did with the others.

Q. You oiled it up, and ran it for a half-hour or so, and then put in a shaft? A. Let it repeat its cycle several times so we see it operates, so that if something happened in shipping it wouldn't make trouble for us. Then we stick in a piece in the machine and start it. The first piece, one of the tools, the set screw, or one of the tools, broke.

Q. Then, what did you do? A. Then, I reported to Mr. Lander whatever happened. We were told to report to the master mechanic. He come up and took **(2221)** a look at it.

Q. And put in another tool? A. Yes.

Q. And started up again, and then what? A. That was—I can't remember if it happened again. We had quite a bit of tool trouble, but we had this trouble with the cam, that it didn't turn what we wanted it to turn. So, Mr.

Lander walked away and says you better put on some very good men there and see what he could do.

Q. That was the day the machine came in? A. I wouldn't say it was the day it came in. It probably was up there 2 or 3 days before it was set up. The millwright sets up the machine, and when they are through with it, we get it. I couldn't say if it was a day or two days, or if it was a week after.

Q. But, anyway, Mr. Lander said to call in somebody and get to working on it? A. He said, "You put on someone to see what he can do, and I will call in one of the experts on the machine." He come in pretty quick.

Q. Who, the Gordon man? A. The Gordon man, yes.

Q. What did he do? A. Well, he started to work on it just like we had done.

Q. Do you know what he did to it? A. Well, he couldn't do very much. He didn't have anything to do. He had the same difficulty, talking about the springing of the shaft. He talked about the sharpness of the nose of the cam.

Q. He wouldn't spend a week doing that, would he? **(2222)** A. No, but when he wasn't able to produce something, of course, he was there trying.

Q. Would he just stand there a week talking about it? A. No, he worked there.

Q. What did he do? A. Well, trying to turn the shaft.

Q. He just tried to turn the shaft without doing anything to the machine? A. We had this difficulty with the tools, you see.

Q. What did he do about that? A. Well, tried to overcome it. We made new set screws. I couldn't remember if we ground them to ratchets any deeper or not. We had tool-makers with him, one tool-maker with him. I tried to get this John Lundquist, he was with him. I asked him if he remembered anything about it, but he said no, but he worked hundreds of machines, and so many more after, I couldn't blame him.

Q. After the Gordon man was there a week, I think you said he got the machine to turn a rough shaft that you were able to grind and sent to hardening. How long did you use the machine that way? A. We kept on working on the machine off and on, and we had difficulty with the machine, and I can't remember now if it was one week,

or two weeks after that we had to call the Gordon man in again, and then he didn't stay very long, because he took a few of those rollers back, if I remember right, it was four, and he said he would send new rollers in.

Q. Did he do that? **(2223)** A. Yes, he did that.

Q. Then, you operated the machine again? A. Then, we tried to get it again, yes.

Q. How long did you try? A. I say we were off and on that machine for about 3 months.

Q. And then you quit altogether? A. Yes.

Q. Gave it up as a bad job? A. Then, Mr. Lander said he would take it off the floor, and see what he could do with it. What he did, I don't know.

Q. Did you pay for the machine? A. I don't know.

Mr. Farley: I think the books of the Gordon Company show the machine was paid for.

Mr. Michael: Well, I don't know what the books show. I haven't looked at them. It seems odd, though, that they would pay for a machine that performed in this way.

Mr. Farley: They weren't as smart as Ford.

Q. (By Mr. Michael, continuing): Who purchased the machine? On whose authority was the machine purchased? A. City Office.

Q. City Office? A. Yes.

Q. Did Mr. Lander have anything to do with it? A. Mr. Lander always goes out and looks over the machinery. He is not with us any more. He is retired. But, he for many years there was the man that was always consulted if a machine was going to be bought, but the last word is down at the City Office.

(2224) Q. Do you know whether Mr. Lander went out and saw the Gordon machine before he saw this one? A. I couldn't say that, but most likely he did.

Q. Where is Mr. Lander now? A. He lives in Berwyn, but he is retired, and he is down in Florida and up in Wisconsin fishing; he is having a good time now.

Q. Where does he live? A. Berwyn.

Mr. Farley: You don't know where Mr. Lander is now?

A. No.

Q. (By Mr. Michael, continuing): Berwyn, you mean a suburb of Chicago? A. Yes.

Q. B-e-r-w-y-n? A. Yes.

Mr. Farley: I think you have Mr. Lander's address in that proposed stipulation, 6939 West 30th Street.

The Witness: That man is the best mechanic I have ever met. He would be able to be an authority on what trouble, what caused our trouble.

Q. (By Mr. Michael, continuing): After you laid the Gordon machine aside, you went back to rough grinding? A. Yes, sir.

Q. How long did you continue that? A. As long as I was in the department.

Q. You left the department in 1922, is that right? A. Yes. I was transferred to department 9 in 1922.

Q. And, they were still grinding when you left? (2225) A. Yes, sir.

Q. But, you don't know what happened after you left? A. Oh, yes. I know Mr. Charlie Hajovich was the foreman after that. He is in the next room. He can tell you all about what happened after that. It would only be what I have heard from Charlie, anyway.

Q. Do you have any knowledge as to how many machines the Gordon Company had built and sold at the time you purchased this machine? A. No, sir, I was told by the man, I remember now, that they had the machine that had turned shafts, but the cam was not as pointed as ours. He told me that. I remember that now.

Q. He told you they had one machine— A. (Interrupting): No, he said they had a machine. I don't know if he said one or two. But, he said they had a machine that—"You have a pretty pointed nose there on the cam," he said, "We haven't had that experience," he said.

Mr. Michael: That is all.

RE-DIRECT EXAMINATION by Mr. Farley.

Q. When the man from the Gordon place came in the first time, and was there about a week, you didn't make it a practice to walk right behind him all day long each day that he was there, did you? A. No. I had two floors in the

six story building, and I naturally, as foreman, I had about —I wouldn't say now how many men there were there at the time, but there were quite a number of (2226) men, and naturally I had to take care of all of them.

Our practice is, when an expert comes in, to give this man a toolmaker and repairman to take care of anything that he might want to have taken care of. That is, if he asks for it. If he don't ask for it, we don't do it.

Mr. Farley: I haven't any more questions.

The Master: That is all, then.

(The witness was thereupon excused.)

CHARLES HAJOVICH was thereupon called as a witness on behalf of the Defendant herein, and having been first duly sworn, testified as follows:

DIRECT EXAMINATION by Mr. Farley.

Q. Your name, please? A. Charles Hajovich.

Q. Where do you live, Mr. Hajovich? A. 2124 North Nordica Avenue.

Q. And, you are employed by International Harvester Company? A. Yes, at the tractor works.

Q. And, what is your job at International Harvester? A. I am a foreman.

Q. How long have you worked for International? A. 24 years.

Q. What department are you foreman of now? A. Department 30.

Q. What do you manufacture in department 30? A. We sell grinder parts; cam shaft is one, miscellaneous parts.

Q. How long have you been in that department? (2227) A. I am in that department since 1918; probably 21 years.

Q. Now, what experience, if any, did you have in the International Harvester Company when the company purchased a Gordon machine for turning cam shafts? A. Well, I was the assistant foreman in department 30.

Q. Do you remember the machine? A. Yes, sir.

Mr. Farley: I wonder if you would let me have those large drawings to use?

Mr. Michael: Yes, sir. (Handing documents to Mr. Farley.)

Q. (By Mr. Farley, continuing): I show you an enlarged drawing, which was marked Exhibit 47-A here, and ask you if you recognize that (handing document to witness)? A. Yes, sir. This is a Gordon machine, Gordon cam turning lathe; part of it, as I see it.

Q. Will you please just tell what you remember about the experiences you had with that lathe? A. Well, the machine was installed in department 30, that was early in 1920. And, we started to operate that machine, and we couldn't get it to work that would be right. In other words, cams were coming out out of shape; on one side it would dig in, and on the other side it would leave a high spot, so it was necessary to leave too much stock on the cam to clean up in the grinder, and the result was the cam was no good. So, it was necessary to re-work that cam, if you wanted to use it.

In other words, any shaft we made, it couldn't pass as it was; it had to be re-worked. So, we had trouble with it, and then when we found we couldn't use the shaft, we stopped.

(2228) Then, of course, my foreman was notified, and he, in turn, reported to Mr. Lander, who was mechanical superintendent, and the man who purchased that machine, as I know.

Then, the man came in from—well, evidently he was sent by Gordon, and he tried it. He couldn't make it any better than we could. He tried, and spent quite a little time on it. We ran the machine on and off, and then we gave it up.

So, when this man came in last time he spent about two weeks on it. Then, he left. After he left we didn't run that machine any more, because we couldn't.

He couldn't make it go himself. And, during that time we continued grinding where we were grinding the cams on the Norton machine, and then we kept grinding those shafts afterwards, because that machine was abandoned afterwards. We couldn't operate it on account of that it didn't turn out good work.

Q. Did you ever attempt to operate the Gordon machine taking more than one cut across the work? A. It was tried, but it didn't help. It was still out of shape.

Q. For how long a time was it—I don't remember that you said that you tried to make this Gordon machine work? A. Well, we had the machine for about 3 months, and we tried on and off. We didn't run the machine continuously. Whenever something was—we tried everything. In other words, we tried to make it work and finally abandoned it. We couldn't make it go. The machine was tried for about 3 months, and then we let it stay.

Q. After you abandoned the Gordon machine what, then, did you use to machine your cams? (2229) A. Well, we continued grinding our cams from forgings on the Norton grinder.

Q. How long did you do that after you abandoned the Gordon machine? A. Well, we run that for 6 years after that.

Q. What next did you do? A. We got a new machine called a Melling cam turning lathe, made by the Walcott people.

Q. What are you using now for machining your cams? A. The Walcott. The Melling cam turning lathe is the name.

Q. In this Melling lathe you have now, do you tilt the tool to keep the angle of the tool constant? A. No, sir.

Mr. Spohn: Will you repeat that, please?

(Last question and answer read by the reporter.)

Q. (By Mr. Farley, continuing): How does the tool move in the Melling lathes which you have now? A. The cam that we have in the machine is one of the cams we are making, is used as a master. That cam is moving the tool back and forth. In other words, the cam is used as a master, which moves the tool-holder back and forth to follow the shape of the cam, and then there is another cam that operates the tool straight up and down, so that the tool works up and down, and back and forth, operated by one of our shafts, which is in the machine used as a master; and, the cam that is being turned is exactly the same as the one that we use for the master.

Q. Did you get any shafts during the three months that you had the Gordon machine from the Gordon machine which you were able (2230) to perform the ordinary finish grinding operation on and use it as a usable part? A. We

didn't use any of them that way. There were some, and some were scrapped.

Q. When you re-worked them, just what did you do? A. We put them in a grinder, and line them with the master, and they grind so that the cam gets in the right shape.

Q. Then that, in effect, was a rough-grinding? A. A rough-grinding before hardening, allowing 25 to 30 thousandths; that was our practice always to leave for the finish grind after hardening.

Q. Was the operation on the Gordon machine, the first turning and the rough-grinding, or re-working, as you just said, how did that compare, the cost, with the cost of machining the shafts on the Norton grinders? A. When we combine the cost of the grinder and turning, it was higher than the grinding alone. We could grind cheaper than turning and grind. It makes two operations, and is more costly.

Q. Did you personally do any work on the Gordon machine yourself? A. I personally didn't. We had a man. We picked out the best man we had in the department, and he was put on the job.

Q. To operate the machine? A. To operate the machine.

Q. And, who was that? A. His name was Albert Kipta.

Q. Did you make any suggestions at any time to anyone as to how this Gordon machine could be made to work? A. No, I didn't.

(2231) Q. Did you ever have any ideas concerning whether or not you could make it work? A. Well, I have my opinion, but it never was tried. I have my opinion what was the matter with it, but that is only an opinion.

Q. What is your opinion? A. All I know is that the machine didn't work.

Q. What is your opinion as to the cause of the trouble? A. My opinion is the design of an outfit, as you see it, it is practically impossible to operate a sharp-nosed cam. It may work on some other shape of the cam, but it wouldn't work on one like that. That is my opinion.

The Master: Why?

A. Well, there are many things enter the picture. As you see this cam here, this is continuously revolving.

The Master: You are referring—

Mr. Farley (Interposing): You are referring to the cam marked 44?

A. Yes.

The Master: Mr. Hajovich, when you make a reference to a part of the structure try to refer to it by its number. Each one of these pieces has a number.

A. In other words, cam—

Q. (By Mr. Farley, continuing): Let me ask you some questions first. The tool here in the Gordon machine is the part that is marked 37, is that right? A. Yes.

Q. And, that is going to cut on the cam shown as No. 18? A. Yes.

Q. Now, that tool is mounted in this large bracket? (2232) A. Yes.

Q. That is marked 23? A. Yes.

Q. Now, what mechanism is there in this Gordon machine which moves the tool to and from the axis of rotation of the work? A. To and from is this cam which will be—

Q. (Interposing): The cam shown in the dotted lines? A. The cam shown in the dotted lines.

Q. And, it has the number 43 on? A. That is 43. That is the one they operate, the whole back; back and forth, and as that revolved, you see, that was on the roller. At the same another—

Q. (Interposing): That roller is marked 46? A. It is. At the same time on the same shaft is another cam marked 44; a roller 53 runs on that cam.

Q. On the cam 44? A. On the cam 44. As it passes over, it gets on the high point. Now then, this roller was supposed to follow that cam, follow the cut, which will, in turn, operate the tool that will have this swivel motion. In my opinion, this, as it gets there, as it was running, it was impossible for that roller to follow. It jumped over, and then reached the spot where it should have reached, and then caused this tool to work improperly. In other words, it didn't follow the cam as it should. That is my opinion about it.

Q. Now, what means was there, as the cam shaft 18 was coming around towards the nose, what means was there

in the machine to make the tool move outwardly or towards the left, as is shown in that drawing? **(2233)** A. Well, that is the cam 43. It would have to swing this bracket away, swing away from it. Then, you see, as the roller is, that wouldn't be in here. The tool was to drop as the cam went over this end.

Q. There is a hollow part in the cam 43, the dotted line part of the cam? A. Yes.

Q. And that cam— A. (Interposing): That hollow, when the cam gets over the roller, then the whole thing comes to the cam, then; the whole bracket. The whole bracket will move toward the cam.

Q. As the hollow part is coming around, moving in the same direction, the hollow part of the cam 43 would be the part that would correspond to the nose of the cam 18, isn't that right? A. No. When the hollow part gets in there, that would be the back of the cam. When the tool is on the nose, it should be on the highest point here.

Q. The carriage has to swing to the left over in this direction? A. Yes, sir. When it goes over the nose.

Q. Yes. And as it moves over that way, what is there that will make it move over towards the left? A. This cam here, cam 43.

Q. What would work it in the other direction, then? A. The spring. The spring that holds the brackets.

Q. Can you point to the spring? A. This spring (indicating).

Q. The spring 49? A. That is right. That was to pull the brackets down; swing, **(2234)** rather, on the shaft above.

Q. The spring rests against, one end of the spring rests against a solid support, this bracket 30? A. Yes.

Q. And, the other end of the spring pushes against the screw 50, that is right, isn't it? A. Yes.

Q. So with the spring in there compressed by those two, which direction is that going to move the screw 50 and the arm 23? A. Well, that is really pulling, not pushing. When the roller follows the cam, the spring was stretching, and as the roller gets on the low spot the spring was pulling in, rather. That was the way that was.

The Master: As the roller gets in the low spot here.

A. The spring pulls the whole bracket.

The Master: Pulled it away from the roller?

A. Toward the roller.

The Master: What keeps the roller in contact when the cam has gone around the hollow part?

A. Springs.

The Master: If the springs are pulled in this way—

A. (Interrupting): When the cam goes over the roller springs are for the reason it is supposed to—the cam is supposed to be riding always on the roller.

The Master: If the spring is pulling toward the right on this drawing here, then how is it going to hold the roller against the cam? It is going to pull it away from the cam, isn't it? If you are pulling this way, toward the **(2235)** right, it is in the opposite direction from the holding it against the cam?

A. The spring is to pull the cam always tight against the roller, so it is right on it.

Q. (By Mr. Farley, continuing): But, the spring 49 is pushing on the part, and holding the roller up against the cam; pushing the part towards me (indicating) to hold it up against the cam at all times, isn't it? Suppose we look at the view in Figure 7, Mr. Hajovich, this shows the nose of the cam, the tool cutting the nose 18 of the cam. A. Yes.

Q. And it shows the roller 46 down into the hollow part of the cam 43, doesn't it, and it shows the bracket 23 pushed over toward the left by the spring 49. If you look first at Figure 6, and then see where the parts have moved from Figure 6 into the position shown on Figure 7, let us see where the high point of your cam 44 is; looking at the cam 44 here, the high point of the cam 44. A. That tool is on the nose.

Q. And, the lower part of the cam 43 has now come around so that the lower part of the cam 43 is in the cutting of the nose, cam 18, as shown in Figure 7? A. I tell you, I have this a little—I can picture that machine more in my mind, more than I do on this picture.

Q. You were confused there. You had it the wrong way around.

The Master: It may be you had a spring over here, which would pull in the other direction?

A. You see, what I was mistaken—the mistake I made, I see it now, in explaining this tool-holder here, the whole bracket, **(2236)** rather, was going in and out, but the cam remained stationary. That is where I had it reversed. I had that reversed. In other words, the tool-holder swings back and forth, but the cam remained; and, naturally, the roller, when it got in the hollow, the tool-holder followed it, and swung away at that time.

The Master: What kept the roller following the cam when it got around that low spot; what kept it following?

A. The spring here.

Mr. Michael: The spring 59.

Mr. Farley: The spring 59.

The Witness: Was pushing the bracket down.

Q. (By Mr. Farley, continuing): Just follow the connections of that part on the spring 59 shown in Figure 6. Did the spring 59 work this whole part 23, or did it work the arm 52? A. That spring worked this arm here.

Q. That spring worked this arm here which tilted the tool? A. I tell you the springs in the back of the machine —you haven't another view of this machine, have you?

Mr. Michael: What do you remember about the machine?

A. The springs that the whole arm—that spring that was to control that is always on the roller. That will be this one.

Q. (By Mr. Farley, continuing): That will be the spring 49?

The Master: Do you remember whether that was a pulling spring or a pushing spring?

A. That is a pushing spring, pushing spring. The spring would have to push that, so that it follows the cam.

Q. The spring 49 is the part which held the roller here in against the cam all the time? **(2237)** A. Yes.

Q. The roller 46? A. It followed it all the time so that the whole arm was to follow the cam.

Mr. Farley: I think that is all. You may cross examine.

The Witness: I got this a little twisted before on account of looking in the wrong place.

Cross Examination by Mr. Michael.

Q. Was the machine you had out there at the plant exactly like these drawings you are looking at? A. Yes. You are referring now to the Gordon?

Q. Yes. You don't remember much about the details of the machine, do you? A. Yes, I do.

Q. Well, you had quite a time with those drawings? A. Well, it is 19 years.

Q. Yes. And, you worked with a lot of machines, haven't you? A. Yes, sir.

Q. Do you know which cam it is in the Gordon machine that keeps the tool on the contour or tries to keep the tool on the contour of the work to be turned? A. Yes, sir.

Q. Which one is it? A. The larger one (indicating).

Q. What is the number of it? A. 44 (indicating).

(2238) Q. And, which one is it that tilts the tool? A. Well, that is the one that tilts the tool.

Q. Which one keeps the tool point right on the contour of the work that you are turning? A. That is the one; that is 44.

Q. They are both the same, then? A. No. One cam moves the whole bracket back and forth to make the cam. In other words—

Q. (Interposing): Which cam is that? A. Cam 43.

Q. Now, assuming the roller 46 is maintained on the cam 43 during a cycle of operation, won't the point of the tool be on the contour you are trying to turn throughout the complete rotation?

Mr. Farley: Do you understand the question? If you don't understand any questions—

A. Repeat that question.

The Master: Do you know what "contour" means?

Mr. Farley: Do you know what Mr. Michael is talking about when he says the contour?

A. That is the—

Mr. Farley (Interposing): Shape of the ca

A. Shape of the cam.

Q. (By Mr. Michael, continuing): Now, I am a you if roller 46 is maintained absolutely against the su of the cam 43 during one complete rotation? Will no point of the tool 37 follow the exact contour you wa turn? A. No, it won't.

Q. Why won't it? **(2239)** A. Now, wait a minut this cam was left around, there was no other cam th

Q. (Interposing): I am just speaking of the ca roller 46 and the point of the tool. A. That would them the shape of that roller. It wouldn't turn the the shape that we want to turn.

Q. Then, it is your point if we have only the ca and the roller 46, and the tool, and the work, the ca would be reproduced in the work? A. Yes, that is al would turn. You couldn't make a cam.

Q. Then, the tool point would follow rather tha shape of the cam 18, it would follow the shape of the 43? A. Much like it; yes.

Q. Well, then, it is the cam 44 that produces the in the work, is that it? The cam 44 in addition t cam— A. (Interrupting): That produces that, yes.

Q. In other words, you have to have 44—the must move the tool point with reference to the axis work? A. Yes, sir.

Q. Then, both cams 43 and 44—

The Master: Did you understand Mr. Mich question?

Mr. Michael: Read the question.

(The last question was read by the reporter.

The Master: If you don't understand any tion, just so state, and you don't have to answe you don't understand. Do you know what "ax the work" means?

A. Not quite.

Q. (By Mr. Michael, continuing): You don't what the axis of the work is? **(2240)** A. Well, axis be, well, involving the shaft, won't it?

Q. You say you are a general foreman? A. I am foreman.

Q. And, you don't know what the axis of the work is? A. Well, I was just explaining it.

Q. What do you think I mean by "axis of the work" in this drawing here that we are looking at? A. While the shaft is being turned, that is what it is. The shaft revolves. That is the axis.

Q. Well, instead of axis I will say center of the work. That means this exact center of the shaft? A. Exact center; naturally, when it is revolving.

Q. The work revolves about its center? A. Yes.

Q. And I use "axis" and "center" interchangeably? A. Yes; center of the work.

Mr. Michael: Now, we will read the question.

(The last question was thereupon read by the reporter.)

The Reporter (Reading): "Q. In other words, you have to have 44—then 44 must move the tool point with reference to the axis of the work?"

(There was no response.)

Q. (By Mr. Michael, continuing): Do you understand my question, Mr. Hajovich? We were talking about the cam 43, the roller 46, and the point of the tool, and you said just taking those elements that the point of the tool would then follow a path which corresponded more to the shape of the cam 43 than it would to the shape of the cam you wanted to cut. That is as I understood you. And, that you would need the cam 44 in order **(2241)** to correct that shape, and make the tool point follow the work that you want to get? A. You have to have either that or a different shape, but it has to be one that will work the tool, so it will work the tool, because unless you move the tool you are turning around, you won't be making the cam.

Q. Why wouldn't you? A. Because, it would be turning around; the tool will be stationary.

Q. Even though you have the cam 43? A. Cam 43 would follow—the tool, then, would be very much like the cam 43, but it won't get exactly the right shape, but it will be very much like it.

Q. But, with the addition of the cam 44, then, it is your testimony you would get the right shape? A. Providing that that cam is working right.

Q. Providing the cam 44 is working right? A. Yes; if it is so designed the tool could follow the shape of the cam.

Q. And it is your testimony that it was the movement of the roller 53 over the high point of the cam 44 that caused the trouble in the turning of the work? A. Yes, sir.

Q. And, how would that cause the trouble, or how would that affect the tool? A. Because, as I say, the design of that cam was such that it was impossible for that roller to follow.

Q. Would it be your opinion just looking at a machine operated of that kind you know it wouldn't work to cut a cam? **(2242)** A. Well, it would have to be tried just as we did. Just looking at it, it does not always answer it.

Q. Did you have anything to do with the purchase of the machine? A. No.

Q. Did you operate the machine? A. I didn't operate it myself. We had a man do that.

Q. And, these Walcott machines you bought in 1926, was it? A. Yes.

Q. What kind of tool—did they have tools that moved in and out and tilted up and down? A. They have a whole tool-holder movement; not only the tool itself. The tool-holder is entirely different than the one we are looking at. It slides back and forth, operated by a cam that we are making, and there are cams on it that also work the tool up and down.

Q. Well, when did you buy the Walcott machines? A. In 1926 we got the first one.

Q. What kind of heads did they have on them? Did the tool move up and down then, or did it rock? A. It rocked at first.

Q. When did you put on these new heads? A. I believe in 1929.

Q. Late in 1929? A. That I wouldn't know.

Q. Do you know why they were put on? A. As I understand it, it was a new tool designed by the Walcott people. It was brought in to be put to work. But, that tool that we had first, it rocked, but it wasn't the principle of this.

(2243) Mr. Farley: The tool you had first on the Walcott machine rocked, but it wasn't the principle of the Gordon machine?

A. That is right. That tool, when the roller went down, the tool went up. In other words, rocked in this motion (indicating). This one works in the same direction, when your roller goes up, so does your tool.

Q. (By Mr. Michael): I don't just follow you there. When what roller goes up? A. I am referring to this one.

Mr. Farley: 53.

A. When it goes up, so will the tool.

Q. (By Mr. Michael, continuing): In the Walcott? A. So will the tool. When the roller rises, so will the tool. The Walcott people, they made the machine, it worked this way.

Q. I thought you were talking about Walcott. You say when the roller drops, the tool drops? A. On the Gordon machine. When the roller goes down, so does the tool. On Walcott, when the roller goes down, the tool goes down.

Q. Just explain to me how the Gordon tool can go down when the roller goes up. A. Here you are revolving this here. When this goes up, this goes down, don't it? When that goes down, the tool goes up.

Q. You mean it tilts the tool up. How about the point of the tool? A. You are tilting the point of the tool. That is what I am telling you.

Q. Does the point of the tool go up? A. In the same direction as the roller.

(2244) Q. I see. Did you have anything to do with the difficulties with the Gordon machine? A. Yes.

Q. Did you supervise any of the work on it? A. Yes.

Q. Did you ever have any trouble with the eccentric, the pump eccentric, cutting the pump eccentric? A. The pump eccentric was all right; that we didn't have much trouble with.

Q. Didn't you have any trouble with it? A. With the pump eccentric, that was perfectly round.

Q. How about the timing of the cams? A. The timing was off altogether.

Q. The timing was off. Do you remember them coming there and putting a new set of master cams on, or re-

positioning them with keys? A. You are referring now to Gordon?

Q. Yes. A. Well, we had a man there. He did many things, and as a rule when we have trouble, the man when he was called in, then, of course, he was the man to show us what has to be done, and how to operate it, which he failed in. He tried, and what he made was no better than the one we made.

Q. What did you do to the machine? Or, what do you know that your men did to the machine? A. Well, he tried everything. He replaced some parts.

Q. You are speaking of the Gordon man now? A. Yes. They were grinding the tools different; set them up and try them. Whatever he did, when the shaft was taken out **(2245)** and checked, it was found not right. The shape of the cam was always wrong.

Q. All the way around or just in these two places? A. At the nose.

Q. On each side of the nose? A. Side of the nose.

Q. Was there a counter-shaft on the machine? A. No, sir. Now, wait a minute, there was a counter-shaft, belt-driven.

Q. The counter-shaft was on the machine? A. No. Above on the ceiling.

Q. Did you have any trouble with the counter-shaft? A. No. That is simple. There was only one belt to pull it. There was no trouble with pulling.

Q. Did any of the springs on the machine break? A. I don't recall that. I don't think so.

Q. Well, you do recall, as I understand you, that you had this machine in there two or three months trying to make it work, and finally you abandoned it? A. Yes.

Q. And, according to some records here, the machine was scrapped in 1927? A. Well, I tell you, the machine was moved out of the department and stored where we store all the obsolete machinery, and was standing in there until it was junked, or whatever they did with it. As I understand it, it was sold for scrap.

Mr. Michael: Track 297. That is all.

Mr. Farley: That is all.

(Witness excused.)

(2246) ALBERT KIPTA was thereupon called as a witness in behalf of the Defendant herein, and having been first duly sworn, testified as follows:

DIRECT EXAMINATION by Mr. Farley.

Q. Where do you live, Mr. Kipta? A. 3437 Jackson Boulevard.

Q. Chicago? A. Yes, sir.

Q. And, you work for International Harvester? A. Right.

Q. What is your position out there? A. Well, I balance all the crankshafts, flywheels, and I have other special work to attend to besides that.

Q. Are you employed as a foreman out there? A. No.

Q. How long have you worked for the International Harvester? A. Well, I started with the International Harvester Company in 1912, the 12th of October, and I left once or twice there; twice.

Q. Were you employed there in 1920? A. Yes.

Q. Did you have anything to do with a Gordon camturning machine? A. I was the operator.

Q. And, you remember the machine? A. Yes, I remember the machine.

Q. Could you state in a general way just what experience you had with that machine at International Harvester? A. Well, I operated it for several weeks, and never turned out a **(2247)** shaft that would be suitable to our company.

Q. Did you operate or attempt to operate the machine when it first came in? A. Well, I can't really recall whether it was the first day or so after the machine was set up or not, but I was the first operator on the machine.

Q. And, had you had any particular experience in operating machines before that? A. Oh, yes. I served my time as apprentice.

Q. Apprentice machinist? A. That is right.

Q. Where did you serve your time? A. Well, I used to be with the Excelsior Company; that is the name of the company now. Previous to that it used to be a bicycle company. It used to be on Randolph, and I just can't recall the street.

Q. You say you never turned a shaft suitable for use for your company, or something to that effect? A. Yes.

Q. What was the trouble with the shafts, with the machine, that you couldn't use them? A. I don't know if there was any trouble with the shafts or not. I think the trouble was with the machine. It would either leave a big hump on the cam, or cut the nose off the cam.

Q. Did you know enough about machinery to attempt to adjust the machine, or to overcome that trouble? A. Yes, we tried to do everything we possibly could.

Q. What if anything do you remember attempting to do? A. Such as adjusting the tools to a set position.

(2248) Q. What were you using at that time in the International Harvester place to machine your cam shafts? A. What were we using?

Q. Yes. A. We were rough-grinding the crankshafts.

Q. Cam shafts? A. Cam shafts. I am working on crankshafts; I get that a little bit mixed up.

Q. Did you ever try at any time to take two cuts on this Gordon machine? A. Yes.

Q. And did you, yourself, make the adjustments on the machine by means of which you could do that? A. Well, we always had some assistant to help us in making the adjustment.

The Master: How did you take the two cuts, by re-setting the tool on the second cut, or simply run through with the same set?

A. You couldn't very well do it with the same set, because you wouldn't be taking off any stock. You would have to re-set the tools.

Q. (By Mr. Farley, continuing): You don't remember what mechanism there was, if any, there to let you re-set the tools of the Gordon machine? A. No, I really can't recall that.

Q. But, there was some sort of a mechanism? A. Yes.

Q. Would you personally make the adjustment to see you were getting your cams the size you wanted them on the machine, or **(2249)** did you have some other machine setter? A. Well, I have done it, yes. I have done it.

Q. On the Gordon machines? A. On the Gordon machines.

Q. Now, did the machine work any better when you would take two cuts off? A. No, I can't say that it di .

Q. And, even with the two cuts, would you still get the hollow on one side and the hump on the other side of the cam? A. That is right.

Q. I didn't have Mr. Hajovich identify these drawings, but did you know these cam shaft drawings there? Do you recognize them as any cam shafts you ever made at the International Harvester (handing documents to witness)? They are Exhibits 310 and 311. A. We didn't have any other shaft at the time I was there except that one shaft.

Q. Is that a cam shaft such as shown in this Exhibit 310? A. Well, I don't know really. I think the number of the shaft, job number, I think was 8049-T. If I can—

Q. (Interposing): That is the number on this particular drawing, is it not? A. I can't see that very well, because I haven't got my glasses, but that is what the number was.

Mr. Farley: I think that is all. You may cross examine.

Cross Examination by Mr. Michael.

Q. You say you took two cuts on the Gordon machine? (2250) A. We could take two cuts, yes.

Q. How could you? A. Well, that is something that I really can't recall right now, but I know we tried to take two cuts on it.

Q. You said you tried to? A. Yes.

Q. Did you succeed? A. Well, evidently we didn't, because we couldn't very well use the machine. It didn't do any good to do it.

Q. Did you take two cuts? A. Yes. We have tried it.

Q. Well, how did you do it, then? What did you do then to the machine in order to take two cuts? A. Well, we would have to set the tool up in some way.

Q. How? A. That I can't really tell you.

Q. Do you know how the tool was mounted in the machine? A. Yes. It was a circle tool, and on an arm.

Q. What held the tool on the arm? A. There is a screw that held the tool in the arm.

Q. Just how would you go about taking two cuts with it? A. Well, I really don't know just how we would explain that, because I really can't tell you offhand how I have done it. But, it was either setting the tool one way or another, or there was some adjustment to it.

Q. There was an adjustment on the tool that you could move it out or in, is that it? A. Not in or out, but you could turn the tool, either lower or higher. I think there were some adjustments there that I (2251) couldn't recall. But, I know we have tried to take two cuts.

Q. And, you did take two cuts? A. Yes.

Q. How much metal did you take off on the second cut? A. That I really don't know.

Q. You are sure you took it by adjusting the tool? A. Yes.

The Master: Are you sure you adjusted the tool rather than simply taking another cut without adjusting it?

A. Well, I don't know how you could take another cut if you didn't adjust the tool.

The Master: I am wondering if you definitely recall that, or just simply remember you took two cuts, and you think you couldn't take two cuts in any other way, and therefore you must have done it that way. Do you recall actually making readjustments?

A. Yes, there was some adjustment there.

Q. (By Mr. Michael, continuing): Was there some adjustment on the machine when it was delivered? A. I don't know whether it was on the machine or on the tool, but I know we took two cuts, and made some changes there.

Q. What other changes? A. That I don't know.

Q. How long did you work with the machine? A. Anywhere from five to eight weeks off and on.

Q. How long every day, for instance? A. Well, we put in a nine-hour day.

Q. How many shafts did you turn on the machine a day? A. Well, not very many, because—we always had the machine, (2252) trouble with the machine.

Q. How many would you say? A. That I couldn't tell you.

Q. You don't know whether it was two or a hundred? A. Well, we have tried more than two, and we didn't make a hundred. We wouldn't go to that expense of scrapping all those shafts.

Q. It was all scrap? A. That is right.

Q. You never got a good shaft on the machine? A. That is right, we never got a good shaft on the machine.

Q. You never even turned one good cam on the machine? A. Well, I don't say we didn't turn one good cam, but the cam shaft was no good after we got through turning it.

Q. It just was scrap? A. That is right.

Q. The shafts you put into the machine were good shafts? A. They were forged shafts, yes.

Q. Regular standard shafts? A. That is right.

Q. And, when they came out they were all scrap? A. When we turned them on the machine they were all scrap.

Q. All scrap. Would you recognize a drawing of one of the cutting units of a Gordon machine if you saw it now? A. I think I could.

Q. Look at this drawing here, 47-A. Do you recognize that (handing document to witness)? A. Well, I can't see this so well.

Q. Haven't you got your glasses? **(2253)** A. No, I haven't.

Q. Do you suppose mine would help you any? A. I don't know whether they would or not. I really can't see this very plain, to tell you the truth.

Q. Can you see it plain enough to tell us how you took two cuts on it, or did you take two cuts? A. No, I can't.

Q. Can you see it well enough to know you couldn't take two cuts? A. No, I couldn't see that at all.

Mr. Farley: Do you want me to tell you how you can take two cuts? I know machines; I can tell you.

Mr. Michael: Well, you would have to add something to it, I think.

Mr. Farley: I think I will leave that for argument.

Q. (By Mr. Michael, continuing): Did you see a Gordon machine operated in any other plant? A. No, I haven't.

Q. Did you work with the Gordon man when he came to remedy the trouble? A. Well, no, I didn't work with him, but I watched him for a while. I was on the floor.

Q. After he spent some time with the machine did it work, did he get it working? A. Well, if I recall, I believe that the man really left the machine, and it wasn't in any better condition than when we called this man to come in.

Mr. Michael: That is all.

Mr. Farley: That is all.

(A discussion was had off the record.)

(2254) Mr. Ohrn: May I say a word?

Mr. Farley: Yes.

Mr. Ohrn: I just wanted to point out that we have much trouble, and Mr. Lander would go to any extreme to make that machine work. And, if he found a way it would work, he would rebuild the whole machine in order that we could use it.

The Master: You say he would do that because he felt he was responsible for the machine for having bought it?

Mr. Ohrn: Yes.

The Master: What was it you wanted to say?

Mr. Hajovich: In regard to that two cuts, when the trouble arises it don't have to be on that particular machine, but as it was on this, when the men come in to try to make it work, the distinction was whether it was because too much stock was removed on the cam, so it was tried by taking a lighter cut, to see if the shape would change on a cam with the lighter cut, but that machine was not built to take two cuts. It was built to take one cut.

Mr. Farley: Do you know whether it was possible or not to fix the machine so that it could take two cuts?

Mr. Kipta: To take two cuts on that Gordon machine, it would have to be rebuilt entirely. As it was, there was an adjustment, but no such thing that it would adjust itself like the Melling cam lathe does. That is built for two cuts; the Gordon did not have that.

Mr. Farley: I guess that is all.

(The witness was thereupon excused.)

• • • • •

(2258) WILLIAM D. HUNT was thereupon recalled as a witness on behalf of the Defendant herein, and having been previously duly sworn, testified further as follows:

RE-DIRECT EXAMINATION by Mr. Farley.

Mr. Farley: Will you mark these, please.

(Two documents were thereupon marked Defendant's Exhibits 312 and 313, respectively, by the reporter.)

Q. You are the same Mr. Hunt who testified here before? A. Yes, sir.

Q. I would just like to ask you, Mr. Hunt, about the machines that you supplied to the Ford Motor Company, Walcott machines supplied to the Ford Motor Company, and I show you a copy of the Melling Patent No. 1,512,995, which I have had marked Exhibit No. 312.

(Handing document to the witness.)

Are you familiar with that patent, and, if so, would you please (2259) state whether or not the machines which you supplied to the Ford Motor Company had that construction in it for the purpose of taking two cuts? A. Yes, sir. I am familiar with that, and those machines were so constructed.

Mr. Farley: I would like to offer this in evidence as Exhibit No. 312. That is Patent 1,512,995.

Mr. Michael: That is already in.

Mr. Farley: Not that particular one.

Mr. Michael: What is the number of it?

Mr. Farley: 1,512,995.

Mr. Michael: Oh, I see.

Mr. Farley: I might state for the purpose of the record that the other Melling patent, which we introduced in evidence as Exhibit 209, was Melling Patent 1,655,655, is drawn to the proposition of the manner in which the tool is moved in the Walcott machines, whereas this patent has to do entirely with the mechanism for having the machine perform two cuts.

The Master: Any objection to the admission of that?

Mr. Michael: I don't know what the purpose of the offer is. What is it being offered for? I don't see any relevancy.

Mr. Farley: The purpose of the offer—do you want to hear from me now?

The Master: Yes, state what your purpose is.

Mr. Farley: The purpose of the offer is, it goes to the matter of apportionment of profits. There are two features to the Melling machine that the Patent Office has granted **(2260)** patents upon, therefore recognizing them as patentable improvements, and that is the purpose.

The Master: If the only objection is relevancy, I will admit the exhibit.

Q. (By Mr. Farley, continuing): Now, Mr. Hunt, with respect to the machines that were sold to the Ford Motor Company, the Walcott machines, my understanding is that all of those machines had a tilting tool in them? A. Yes, sir.

Q. Did the Walcott Company always continue to manufacture machines of that particular type? A. No, the Walcott Machine Company are now manufacturing machines with the parallel type tool-holders, in which the tools do not tilt.

Q. And, just how do the tools move in the type of machines that you are now manufacturing? A. The type of machines that are now being manufactured, known as the parallel type tool-holders, the tool is held parallel in all positions by the arm that carries the top part of the tool-holder, and an arm mounted a short distance below that, those two arms being so fastened that they are parallel to each other, therefore causing the holder that carries the tool to always remain in a parallel position.

Q. I show you a copy of Melling Patent No. 1,634,550, which I have had marked Exhibit No. 313, and will you please state whether or not the mechanism which you just described is as shown in that patent (handing document to witness)? A. This patent is the parallel type tool-holder machine.

(2261) Q. Now, are you familiar with machines of the Walcott Company that were sold to, and are in use by, the International Harvester Company at their Chicago plant? A. Yes, sir.

Q. And, will you state whether or not, or, will you state which type of machines they are, whether they are of the tilting tool type, or the type shown in the patent, Exhibit No. 313? A. The machines now in use in the Chicago plant are the parallel type tool-holders.

Q. And, are they like the mechanism shown in this patent? A. Yes, sir.

Q. Have you any blue-prints of the Walcott Company that illustrate that mechanism? A. I have the print, assembly print, of our present tool-holder of the parallel type.

Mr. Farley: I wonder if you would produce it, please.

(The document above-referred to was thereupon produced by the witness.)

Mr. Farley: Will you mark this, please, Mr. Reporter?

(The document above-referred to was thereupon marked as Defendant's Exhibit 314 by the reporter.)

Q. (By Mr. Farley, continuing): You have produced blue-print of the Walcott Machine Company, drawing No. C-2129, which I have had the reporter mark Exhibit 314. Will you please state whether or not that shows the same mechanism as is described in the patent, Exhibit No. 313? A. This construction is exactly the same, as far as the principle is concerned, as the one shown in Patent 1,634,550 with the upper arm carrying the top part of the tool-holder, and the **(2262)** short parallel link below it causing this tool-holder to travel in a parallel motion as it is moved back and forth by the overhead tool control cam.

Mr. Farley: Perhaps you would like to look at this, Mr. Spohn (handing document to Mr. Spohn).

Mr. Spohn: All right.

Q. Now, is the mechanism shown in the blue-print, Exhibit 314, the type of mechanism which the Walcott Company is now supplying to purchasers concerning which Mr. Michael asked you several questions when you were here last? A. Nearly all of the tool-holders now built are of the parallel type construction.

Q. You have made some improvement in the machine in recent years, however? A. Yes. The machines have

been improved; the location of the overhead cam has been changed, which makes it better to make a tool control cam or better construction.

Q. Are you familiar with the so-called Blanchard principle of operation? A. As I understand the Blanchard principle of operation it is practically the same as the parallel type construction I have here.

Q. Now, will you state whether or not, in employing the Blanchard principle as it is used in the Walcott machines, it is essential or necessary to tilt the tools? A. The fact that we are turning cams successfully with the parallel type tool would seem to me to prove conclusively that it is not necessary to tilt the tool.

Mr. Farley: I offer Exhibits 313 and 314 in evidence.

(2263) Mr. Spohn: Are they still on the question of apportionment, those same two offers?

Mr. Farley: Yes.

Mr. Spohn: We just object on the same grounds as the others, your Honor, the materiality and relevancy of them.

The Master: I think the materiality of these may be a little more remote than the other exhibit, but I will admit them in evidence.

Mr. Farley: I might state, your Honor please, on that point, so that you might understand my reasons for producing these, you will recall that the witnesses Hajovich and Kipta of the International Harvester Company described how the machines in their plant, that the tools moved straight up and down, and I thought it would clarify the record if I had actual showings as to just what that movement was.

The Master: All right.

Mr. Farley: That is all. You may cross examine.

Re-Cross Examination by Mr. Michael.

Q. Mr. Hunt, do you still sell some of these Melling type of machines where the tool tilts? A. There are occasionally tool jobs that go out with the tilting tool. I believe there are some firms that have permission to use the tilting tool if they so desire.

Q. It is only in connection with orders from concerns of that kind that you supply the tilting tool? A. Yes, sir.

Q. And, you supply the machines of the parallel holder type to **(2264)** non-licensees, is that it? A. Well, I wouldn't say exactly that, because we are furnishing the parallel type tool to companies that are also licensed to use the tilting type tool.

Q. And, do you furnish such companies with the sliding type of tool on new machines, or on machines they already have? A. Well, we furnish most of the new—practically all of the new machines that go from our plant are with the parallel type heads. Some of the old machines are repaired, rebuilt, and where they have the tilting type heads, the repaired or new heads required on that machine are of the tilting type. Or, again, they sometimes change over and go to all the one type, or the parallel type heads.

Q. Then, on all orders for new machines, at the present time, you supply the parallel type head? A. We built all that type this last year; there were not any type new machines that went out without the parallel type on in the last year.

Q. How long has that been your practice? A. Well, that is according to the customer, whether he has a license to use the tilting type, and which is it. If he wishes the tilting type, and because of the fact he had them previous to that, why, if he orders them he gets them.

Q. Is the production the same on each type? A. Well, on our latest design of the type KT, because of the shape of the overhead or tool control shaft, we are able to turn more cams than we are on the old tilting type machine.

Q. And that improvement was made when? A. I can't give you the exact date. It is within the last eight **(2265)** years, I believe.

Q. Within the last what? A. Eight years.

Q. That you have been selling the latest improved type of sliding— A. (Interrupting) I couldn't give you the exact date of that.

Mr. Farley: It is approximately eight years?

The Witness: I believe it is.

Q. (By Mr. Michael, continuing): That takes us back to 1931? A. Yes. I rather think we could get—it might not be quite then. I would have to look that up, but it is right around that date.

Q. Then, it is your testimony as early as 1931 you were offering the trade a machine of the type shown in this blue-print, Exhibit 314, which gave more production than the production of the machines with the tilting tool? A. This head as so constructed here was put out in 1929; this type here (indicating).

Mr. Farley: Referring to Exhibit 314?

A. Exhibit 314 was put out in 1929.

Q. That didn't embody the improvement? A. That didn't take the latest improvement, no.

Q. Then, beginning in 1931 you sold machines embodying the latest improvement, which machines gave a production greater than the tilting tools? A. Yes.

Q. And, how many of the tilting tool type would you say you sold since 1931? A. I wouldn't state, because I haven't any idea.

Q. Would it be five, or ten, or more? **(2266)** A. I wouldn't care to say. When I was here before I made a statement as to the number of machines we had sold in the past year. When I went back to Jackson I asked them to look up and see how many of the machines were of the tilting type. There wasn't any. That is as far as I asked. So, I am not—I wouldn't know.

Q. You only asked about the last year's? A. Yes. I guessed about the last year, and I asked about the number of the tilting type machines that had been sold in that year. So, I am not familiar enough with that to answer it.

Q. When did you sell—how many of the machines did you sell to International Harvester Company? A. Over a period of years there is, I imagine, around five.

Q. Cam turning machines? A. Yes, sir.

Q. When did you sell them the first one? A. That was back in 1926, I believe.

Q. When did you sell them the others? A. Well, along over a period of years. The first one was, of course, the first one was the old type of tilting tool.

Q. And then you later changed the heads on that machine, didn't you? A. Yes, sir.

Q. When did you change them? A. That would be after '29, or during '29. I don't know the records.

Q. Do you know why you changed them? A. No, other than that they purchased them.

(2267) Q. Were they changed at your invitation, or did the company direct that they be changed on the first machine? A. Well, I am in the engineering department; and, of course, the sales department, I have no connection with that in the way of selling, so I wouldn't know whether International Harvester Company approached us, or whether we approached them.

Q. On the heads you gave them in exchange or to replace the tilting tool type, did that embody the latest improvements that you have now? A. That is this type as shown here on Exhibit 314.

Q. How did the production of that type compare with the tilting tool type? A. They were practically the same.

Q. Well, were they the same? A. I would think they would be.

Q. You would get just as many shafts on one machine as you would on the other? A. Yes.

Q. Then, why would you say they changed? What was the change made for? A. I presume the change was made because of the new patent issue.

Q. What do you mean by that? A. There was a new patent issued on this type of head.

Q. You never make changes in new machines until your patents issue? A. Yes, we make a lot of changes without having patents.

Q. What do you mean you suppose you made it because there was a new patent issue? A. We had a new type of head and a new patent was allowed; therefore, (2268) those heads were used on the new machines, or any replacements.

Q. Do you recall why you designed the new type of head? A. Because there was a patent suit pending in regard to the old type of head.

Q. Prior to the time you designed this new improvement on the sliding—what do you call it, parallel type of head? A. This is the parallel type head.

Q. Prior to the time you designed the new improvement on that, that gave you the increased production, did any of the authorized licensees of the tilting tool type change over to the other type of head? A. Yes, sir, because most of those have this type of head. The new improved type is an entirely new machine, and you couldn't put this head on the old machine.

Mr. Farley: The witness refers to the Exhibit 314 when he says "this."

A. Yes. This 314 is the head that went on all of the old type machines that have been replaced.

Mr. Farley: Off the record a minute.

(A discussion was thereupon had off the record.)

The Witness (producing document): There is no difference in the principle of the machine you see here. Here in this case your overhead cam contacts this roll here if the distance from here to here is greater than the distance from here to your pivot, this cam has to have a larger throw on it. This roll is located directly over the cam, and the throw on the roll, or overhead cam that controls that roll, is **(2269)** equal to the distance of the rise and fall of your tool.

This construction is exactly the same as this, as far as the principle is concerned, both parallel type heads.

Q. (By Mr. Michael, continuing): He is comparing Exhibit 314 with a new print he has just produced, marked KT-530A, and as I understand your testimony, this print KT-530A discloses or shows the newest type of head, is that right? A. Yes, sir.

Q. And, you say they are both of the same principle? A. Both of the same principle.

Q. And, they are both the same as the Blanchard principle? A. Yes, sir.

Q. And how about the tilting tool type of head, is that also the same principle as these? A. The tool does not tilt, and in the old type the tool does tilt. In that the principle is different.

Q. I am asking you, rather broadly, now, is the principle of the tilting tool type head the same as the Blanchard principle? A. Well, it has the same movements.

Q. I am asking you if it is the same principle? A. I believe it is.

Q. In other words, the same principle as these? A. No.

Q. These, you say, are like Blanchard's? A. These are like Blanchard's, but this does not tilt the tool, and the fact that the other one does makes the two heads different.

Q. In principle? A. If one tilts, and the other doesn't, it will differ.

(2270) Q. The tilting tool type of head is not on the Blanchard principle? A. No, I didn't say that.

Q. What do you say? It is? A. I believe you can construe it to be of the Blanchard type.

Q. And this print, Exhibit 314, is also of the Blanchard principle? A. This is the Blanchard principle.

Q. And, the one you just produced? A. That is the same principle as this.

Q. Then, all three of them are the same principle? A. With the exception of one tilts the tool, and the other does not.

Q. I understand, but that is a detail, isn't it? They are all the same principle? A. Well, I don't know whether you would call that a detail, or whether it is a major construction of the head.

Q. Are they all the same principle? Are they all the same principle as Blanchard's? A. I am not a patent attorney.

Q. I am not asking you as a patent attorney. A. And, I am not in a position to answer a technical question of that type. I am not that, and I don't care to answer that, because I am not—I haven't studied patents enough. I can tell the construction of these different heads. When you go into the matter of minor or minute details of that, I don't know if I am absolutely qualified to answer.

Q. I am not going into minute details. I don't want to consider details. You said, in answer to Mr. Farley, this was a great deal on the Blanchard principle? A. Yes, sir.

(2271) Q. Is it? A. Yes, sir.

Q. Is this one KT-530A? A. Yes, sir.

Q. Is the tilting tool head? A. The difference in the construction of these—

Q. (Interposing): I am talking about principle now, not construction. A. The fact that this contacts the roller here is the same as in the tilting type. The fact that this arm operates around a center is of the same type as the tilting type, but when you get to the point of the tool, one tilting and the other parallel, there is the only difference in these two heads, as far as principle is concerned.

Q. Between what two heads? A. This head and the tilting type head.

Q. 314 and the tilting type? A. Yes. The difference is one has the parallel type tool that does not tilt, and the other does, and holds your cutting angle.

Q. But, are they, or are they not, the same principle as Blanchard? A. I told you that I didn't feel I was qualified to answer technical points.

Q. Then, when you told— A. (Interrupting): This point is a matter of construction. This from here and the others, there is the difference in those heads. If the Blanchard principle does not require the tilting of one, and the parallel of the other, if that doesn't make a difference, then they are both alike.

(2272) Q. Then, when you told Mr. Farley this Exhibit 314 was made on the Blanchard principle, do you want to withdraw that, or do you want to stick to it? A. It may be that is correct from what I have read of the Blanchard principle.

Q. What about this one, KT-530A? A. That is the same principle as this. The principle of those two are exactly the same.

Q. And, they are both the same as Blanchard? A. I believe they are the same as Blanchard. I don't understand the part of the tilting.

The Master: You have got a good deal on that testimony referring to that latest print. I think it ought to be marked and admitted in evidence, at least for the purpose of indicating what the witness is talking about.

Mr. Farley: I will ask that the drawing, KT-530A, be marked Defendant's Exhibit 315.

(The drawing above-referred to was thereupon marked Defendant's Exhibit 315 by the reporter.)

Mr. Farley: And, I offer that exhibit in evidence.

The Master: I will admit it.

Mr. Farley: I don't know whether—was that all you had, Mr. Michael?

Mr. Michael: No.

Mr. Farley: Pardon me.

Q. (By Mr. Michael, continuing): Do you remember when you first made the new parallel link type of head? A. The date on that print, I believe, is 1929. I think they were designed the latter part of '28.

(2273) Q. Is this the patent covering the parallel link type of head, 1,634,550, Exhibit 313? (Handing document to witness.) A. Yes, this is your parallel type head.

Q And, you first made it in 1929? A. The date here is '29 on this assembly, but, undoubtedly, the head was designed before that.

Q. How long before? A. I would say in the latter part of '28. Some time during '28.

Q. And, you think you first sold it in '29, is that it? A. I think either the very last part of '28, or first part of '29.

Q. The patent, 1,634,550, Exhibit 313, was issued in 1927, wasn't it? A. Well, the date is on there.

Q. There is the date on it, and it was filed, the application for the patent was filed in 1926? A. Then, it must have been designed then—started.

Q. When? At least as early as 1926? A. Yes.

Q. "Started," you mean completed? A. The heads, there might not have been any of them being used. The drawings might not have been completed and sold until 1929.

Q. You know they weren't sold before 1929, don't you? A. I would think they weren't.

Q. You know they weren't? A. I would have to look up the records.

Q. And, you know why they weren't sold until 1929, don't you? A. I don't remember the dates. I know when they started to sell them; yes, sir.

Q. Was it in relation to anything else that happened that helped **(2274)** you fix that? A. I think I stated it.

Q. The patent suit, or decision of the Court of Appeals? A. The patent suit; the patent pending.

Q. Do you remember the Court of Appeals deciding the Walcott case in 1929? A. I didn't know the date of that.

Q. Don't you know that that is why the company didn't sell these until 1929? A. They didn't design them until they thought they wanted to design a different type of head because the patent was pending.

Q. They designed them three years before 1929, didn't they? A. Not in our department.

Q. How do you account for this? Doesn't that show all of the details? A. Yes, sir.

Q. Then, they had it designed three years before 1929, didn't they? A. They had it designed as far as the patent was concerned, but as far as the drawings were concerned,

I don't think you would find the work drawings were designed until later.

Q. Would it take three years to design working drawings? A. No, sir.

Q. Then, why didn't they design a working drawing prior to 1929? A. That you would have to ask the print room.

Q. That you don't have any idea why, do you? A. I could have.

Q. Have you? A. Yes, sir.

Q. What is your idea? **(2275)** A. Because there was a patent suit pending, that is the reason.

Q. In other words, you didn't think well enough of this thing shown in this patent, Exhibit 313, to make it until you had to make it? A. Well, it cost money to bring out a new type head.

Mr. Michael: That is all.

Mr. Farley: Just one question, Mr. Hunt.

RE-DIRECT EXAMINATION by Mr. Farley.

Q. I am not sure it is entirely clear as to whether or not, when you changed over any of the machines which had a tilting tool to the type of head shown in Exhibit 314, what effect that had on the output or production per hour of the machine, as to whether it increased it, or decreased it? A. The parallel type head as shown here, when we built those heads and sent them out, we sent them out with the quotation as we did on the tilting tool. In other words, we felt that the machines would produce as many shafts, and have proven to produce just as many shafts with the parallel type head as with the tilting tool head.

Q. Did I understand you to say just then they have proven in actual production, actual practice, they have turned out just as many? A. Yes, sir.

Q. That has been your experience? A. Yes, sir.

Q. They actually have turned out the same production as the ones with the tilting tool? **(2276)** A. Yes, sir.

Q. Just on that point now, can you state whether or not the change to the parallel type head as shown in Exhibit 314 involved any higher maintenance cost as far as the tools were concerned? Did the tools hold up as well, if you know, on Exhibit 314 as they did on the tilting? A. As far as I know, the tool cost was practically the same.

The Master: Did you make any other changes in the machines at the time you put this new type head on which might increase its efficiency?

A. We simply took the old heads off and replaced them with these heads, making no other change in the machine at the time. The change in the machine was made later when we decided to make a different type, or replace the overhead cam in a different position in order to get a better construction of the two control cams. That was a later development.

Q. That is the KT model? A. Yes, sir. That was entirely later development. These heads are interchangeable on the machines. This head of Exhibit 314, of the tilting type head, are interchangeable on the machines, with the exception you have to make overhead cams when you make heads.

Q. You have to change the overhead cam? A. You have to change the overhead cam.

Q. When you substitute Exhibit 314 for the old tool tilting head? A. Yes, sir. Outside of that they are the same.

* * * * *

(2278) CHARLES GORDON was thereupon called as a witness on behalf of the Plaintiff herein, and having been previously duly sworn, testified further as follows:

RE-DIRECT EXAMINATION by Mr. Michael.

Q. Mr. Gordon, at the time of entry of the final decree in the Walcott case, or at any other time, did you know, or have you known, that the Walcott Company had guaranteed the Ford Motor Company that the Melling machines would not infringe any patents, and had undertaken to indemnify and hold the Ford Motor Company harmless in the purchase and use of those machines? A. No, sir.

Q. Did you ever see the Ford purchase order for the Walcott machines prior to this lawsuit? **(2279)** A. No, sir.

Q. Did you at any time have any knowledge of the Ford Company's practice or custom respecting patent guarantees? A. No, sir.

Q. I think Mr. Farley asked you to produce the purchase order for the Gordon machine. Did you make a search for that? A. Yes, sir.

Q. Did you find it? A. Yes, sir.

Q. Can you produce it? A. This is the purchase order that I found (producing document).

Q. Does that contain a patent guarantee? A. It does; what I consider is a patent guarantee.

Q. Down in the fine print at the bottom? A. Yes, sir.

Q. When did you first observe, or when were you first aware that there was a patent guarantee in this order? A. When I found it about two weeks ago, I think it was.

Q. Was the machine covered by this order that you have produced from the Ford Company for the Gordon machine ever paid for? A. No, sir.

Q. Did you ever know that the National Automobile Chamber of Commerce was defending, or had defended, the Walcott Company's suit brought by your company for infringement of the patent here in suit? A. No, sir.

Q. Have you read the testimony of the International Harvester Company witnesses? A. I have.

(2280) Q. Do you recall the sale of a Gordon machine to that company? A. I do.

Q. What company sold the machine to International Harvester Company? A. The Charles Gordon, Incorporated.

Q. Were you an officer of the Charles Gordon, Incorporated? A. I was.

Q. At the time the sale was made? A. Yes, sir.

Q. Is that company still in existence? A. No, sir.

Q. What happened to it? A. That company was dissolved quite a number of years ago.

Q. And, the business in these Gordon machines was thereafter carried on by what company? A. The Production Machine Tool Company.

Q. And, after that by what company? A. By the Gordon Form Lathe Company.

Q. The plaintiff in this suit? A. Yes, sir.

Q. Where and by whom was the machine sold to International Harvester Company built? A. That machine was built by the New Process Specialty Company.

Q. They were located in Milwaukee? A. Located in Milwaukee.

Q. They were built under contract with Charles Gordon, Incorporated? A. Yes, sir.

Q. Was it one of the early machines built under your patent, or **(2281)** according to your invention? A. I think it was the third or fourth machine that we built. I know it was built by the New Process Specialty Company, and they completed the experimental machine and built five more under contract, and it was one, I think, of the earliest ones that they delivered.

Q. Who, or what company, started the first experimental machine? A. The Monarch Machine Company of Milwaukee.

Q. Then, when that machine was partly completed you took it away from them and gave it to New Process? A. As I remember, that company was dissolved. Anyway, they sold all their equipment, and called me up one day and told me I would have to take anything we owned out of their plant because they were no longer operating.

Q. And, that is when you made your connection with this New Process Specialty Company? A. Yes, sir, we had everything shipped over from the Monarch Machine Company over to the New Process Specialty Company.

Q. And, the New Process Specialty Company completed that first experimental machine? A. Yes, sir.

Q. And built how many more, do you know? A. Five more.

Q. To whom, if anyone, did you sell the first experimental machine? A. The original experimental machine was sold and delivered to the Nash Motors Company, Kenosha.

Q. And, how many more machines did New Process build for you? **(2282)** A. Five.

Q. Five. And, this one that you sold to International Harvester was one of those five? A. Yes, sir.

Q. Did you personally have anything to do with the sale of the machine to International Harvester Company? A. I did not. It might have been that I had—I might even have helped draw up the quotation on the machine, that we made to them. I might even have called up the Purchasing Department in connection with that, but I doubt very much whether I had. I can't recollect anything. I have tried very hard to find out just what that connection was, whether it was done by correspondence or otherwise.

Q. Do you recollect definitely whether or not you had anything to do with the machine after it was delivered? A. I know positively I had not.

Q. You never saw the machine in the plant? A. I never saw the machine in the plant at any time.

Q. Who, on behalf of Charles Gordon, Incorporated, did have anything to do with the machine after it was delivered to International Harvester? A. There were two men in my employ that had something to do with it. One of them was my son, L. W. Gordon, and the other one was Frank C. Litchfield.

Q. Mr. Litchfield is dead now? A. Yes, sir. That is, I have been advised he died some three or four years ago, but I am not sure when it was.

Q. Who, on behalf of the Charles Gordon, Incorporated, installed or **(2283)** demonstrated the machine after it was delivered at the International Harvester Company? A. L. W. Gordon was sent down there to demonstrate the machine.

Q. Have you consulted him about the matter? A. I have.

Q. Did you obtain a report from him on it? A. I did.

* * * * *

Q. (By Mr. Michael, continuing): Did you have, or the Charles Gordon, Incorporated, ever receive any complaints or calls from International Harvester Company about the machine after it had been set up and demonstrated? A. Not to my knowledge.

Q. If there had been— A. (Interrupting): Pardon me. Perhaps I should mention that we got a call, that is, I was advised that we had a call from my **(2284)** son when he was down there demonstrating the machine that there was an eccentric on the shaft that was to be turned, and that eccentric was not exactly cylindrical. And, it was my understanding that he, in some way—I don't know how—got in touch with Mr. Litchfield, who was the draftsman, and had him go down there to see what the trouble was. When he got there he found the trouble and remedied it during the time he was demonstrating the machine.

Q. All this matter you refer to was during the demonstration of the machine? A. That is my understanding.

Q. Before it had been turned over to International Harvester? A. Yes, sir.

Q. Well, were there any other complaints that you know of? A. No, sir.

Q. And, if there had been would you, as president of the company, have known about it? A. I certainly think I would.

Q. Was the machine paid for? A. Yes, sir.

Q. Have you made a search of the Charles Gordon, Incorporated, records to determine dates of shipment and invoicing, payments, and so on? A. Well, there isn't enough left of the Charles Gordon, Incorporated, records so that any search could be made.

Q. What has become of it? A. Well, they were destroyed when the Production Machine Tool Company was organized to carry on the production and sale of the cam lathe.

(2285) Q. Have you any independent recollection of about how long following the invoicing of the International Harvester Company machine that it was paid for? A. It was my understanding and belief that that machine was paid for about 60 days after it was invoiced. That was my recollection of it.

Q. Have you been able to verify it in any way? A. I have.

Q. And, how was that? A. I personally went to the International Harvester Company and—

Q. (Interposing): When did you go to the International Harvester Company? A. I went to their general offices on February 24.

Q. This year? A. 1939, yes, sir, and I got in touch with Mr. N. Y. Leslie who, I was informed, was in charge of the disbursement division of the accounting department. And, I inquired from him if he could advise me as to when that invoice was paid, and after he had, or his assistants—whoever it was—had made a search, they advised him, and he advised me, that the invoice was approved for payment on April 16th, 1920, and that the payment would actually be made by check within 48 hours after the invoice had been approved by his department. That was as near as he could advise me, and that is really all I know about it.

Q. Did you have any papers with you that you gave or showed Mr. Leslie at the time you made inquiry about it? A. Yes, sir.

(2286) Q. What did you have with you? These records (indicating)? A. I had some photostats, and these are the photostats here, Exhibits 308, 309, 306 and No. 2 sheet of 306.

Q. And, did Mr. Leslie make his search of the records based upon the information contained in these exhibits? A. Yes, sir. I gave him these photostats and asked him if he could find out when that payment was made, and he advised me a payment was made in the amount of $5300, authorized by his department on April 16th, 1920.

Q. Did you make any notation of your talk with Mr. Leslie? A. Yes, sir.

Q. I wish you would check and make sure whether this April date you have given is correct or not? A. (Examining document): My note calls for the payment having been authorized April 21, 1920.

Q. Then, in your testimony here where you have said April 16, you meant April 21? A. April 21. I don't know where I got that April 16. April 21.

Q. Do these exhibits that you showed Mr. Leslie anywhere show the amount of the invoice as $5300? A. Yes, sir. The invoice dated here 2/16/20, that is where I got the "16"; 2/16/20, invoice $5300.

Q. That was Charles Gordon, Incorporated, invoice? A. Yes, sir.

Q. And, it was that invoice that Mr. Leslie informed you had been approved for payment April 21, 1920? A. April 21, 1920.

Q. Did the machine carry a guarantee with it? A. Yes, sir. It was sold with a guarantee of a certain production, **(2287)** and to be of first-class material and workmanship, and so on.

Q. And, if the machine had been faulty or inoperative—

Mr. Farley (Interposing): It sounds like it is going to be rather leading.

Q. (Continuing): —would the International Harvester Company have been under any obligation to pay for it?

Mr. Farley: I object to that as leading, your Honor please.

A. No, sir.

The Master: I will overrule the objection.

A. Mr. Leslie advised me if the machine had not been approved by the superintendent of the plant where it was located, he never would have authorized payment, or his department never would have authorized payment. I believe that is the expression he used, and he said that was a rule of their department. They had to get the approval of the superintendent of the plant where the machine was in operation before they would authorize payment.

Mr. Farley: It seems to me we are going rather afield here, if the Court please. Of course, that is obviously hearsay. I don't think it is important; I will let it ride.

The Master: I think it is hearsay, but the same thing was testified to by the witnesses at the International Harvester themselves.

Q. (By Mr. Michael, continuing): What was the practice of Charles Gordon, Incorporated, with reference to invoicing a machine of this kind? A. Well, as soon as the machine was shipped, usually the day the **(2288)** machine was completed ready for shipment, the bookkeeper would be notified, and he would invoice it, and the machines were usually shipped at that time.

Q. Well, would the invoice in any case have been rendered before the machine was shipped? A. No, sir.

Q. Mr. Gordon, outline briefly the commercial record of manufacture, sale and use of the Gordon machines.

* * * * *

A. I checked up recently my memory, and any information I could **(2289)** gather as to the number of machines that we built—

Mr. Farley (Interposing): If your Honor please, may I ask that you ask the witness, or instruct the witness, to limit his testimony to cam shaft machines. The Gordon Company, by his testimony in the case before Judge Tuttle, and the other case, sold, as I understand it, many more crank cheek turning machines than cam turning machines. I don't think the record should be burdened with crank cheek machines.

The Witness: That isn't true. We sold many more crank shaft machines than crank cheek machines.

The Master: Whatever it is, I think you should be limited to the crank shaft machines. We aren't interested in any others.

The Witness: I believe a total of 27 crank shaft machines—

Q. (By Mr. Michael, interposing): Well, have you a memo you have prepared from actual records to show the number of machines you have sold of the Gordon cam turning lathe? A. I have a list here.

Q. Isn't it true that that list was made from actual records? A. Yes, they were made—the entire list was made from actual records.

Mr. Farley: Was the list prepared by you from those records?

A. This list was; yes.

Mr. Farley: All right.

The Witness: Yes.

Q. (By Mr. Michael, continuing): Tell what it shows. A. It shows on the list of cam machines that two were sold to **(2290)** Nash Motors; one to the Muskegon Motor Specialty Company; two to the Maxwell Motors; one to the International Harvester Company; two to the Peerless Motor Car Company; seven to the Studebaker Corporation; one to the Packard Motor Car Company; two to the Cadillac Motor Company; one to Peter Hartley; one to the Amstead Engineering Company; two to the Reo Motor Car Company; two to the Jackson Motor Shaft Company; one to the Cleveland Cam Shaft Company; and, two to the Willys Corporation; making a total of twenty-seven cam machines.

Mr. Farley: How many to Reo?

A. Two.

Mr. Farley: And, one to Cleveland?

A. One to Cleveland Cam Shaft Company.

Mr. Farley: And, Willys?

A. Two.

Mr. Farley: What was the third one, please?

A. Maxwell Motors.

Mr. Farley: Two or one?

A. Two.

The Master: Do you know how many of those machines are being operated today?

A. I do not. I haven't been in touch with the machines for quite a number of years.

The Master: Are you familiar with the shape of the cams that were turned on these machines that were sold?

A. In a general way. I haven't any drawings of them, and I have no recollection, definite recollection, of the shapes of the different concerns.

(2291) The Master: You had to know at the time in order to design the master cam properly, did you not?

A. Well, some of them did in our organization. I wasn't doing all of the work. I had this Mr. Litchfield that I spoke about, he was the draftsman, and my son also; he did some of the work. And, I was engaged in other lines of business as well as that.

The Master: Do you know whether any of the cams that were to be turned on these machines were sharp-nosed cams similar to the shape to that on the Ford cam shaft, or were they the blunt-nose type, such as the Nash cam shaft we have in evidence?

A. The only one I can definitely say was similar to the Ford was the Jackson Motor Shaft Company where they turned a Ford tractor shaft. I wouldn't be able to tell you of any others. But, that I happen to know because I went over and saw it in operation, and that was where I met Mr. Melling in connection with his machine. That is what makes me remember so distinctly as to having been over there. There were other things that also came up, that I protested to the Jackson Motor Shaft as to the department in which these machines were operating.

Q. (By Mr. Michael, continuing): How many machines did you sell to the Jackson Motor Shaft Company? A. Two machines.

Q. And, do you remember what the first machine sold to them was set up to turn? A. The Ford tractor shaft.

Q. The F shaft involved in this lawsuit? **(2292)** A. The F shaft, yes. As I remember, it was the same shape as it is today.

Q. And, did you on your visits over there see the machine? A. Yes, sir.

Q. Your machine? A. Yes, sir.

Q. Working on those visits? A. I did; yes, sir.

Q. Was it in regular production? A. It was operating and turning shafts. I presume it was in regular production.

Q. Did you see the shafts being turned on it? A. I did.

Q. Were they usable shafts? A. Yes, sir. I understood they were using them. They didn't tell me they were not using them.

Q. Do you know how long they used the machine on the Fordson tractor shaft? A. No, I do not know how long.

Q. Did they buy a second machine? A. Yes, sir.

Q. Of yours? A. Yes, sir.

Q. What did they use that on? A. The Lycoming Motor Company shaft.

Q. Do you remember the shape of the cams? A. No, I do not. I don't think—as I remember, it was a 12 cam shaft.

The Master: About how many different days were you in **(2293)** the Jackson Motor Shaft Company watching the operation of your machine?

A. I think I was only there the one day.

The Master: Were there any statements made by those in charge of the operation of the machine at the plant with regard to its efficiency in cutting the Ford cams?

A. The complaint that was made to me when I went over there was that the rollers on the rocker arm, and the rollers at the lower end of the arm that operated against

the form cam stuck on the pins, the supporting pins, and I protested quite strongly because they had the machine in the department where it was, that department being the rough-grinding, cam rough-grinding department, and the emery was just covered all over every machine, and we had not designed the machine with protection against any such condition as that. That was never supposed to be operated alongside of grinding machines. Therefore, there was no provision made for protecting them against this emery that was laying around there. Every machine in the department was pretty well smeared with emery.

The Master: Did they move the machine from that department when you brought that to their attention?

A. From that department?

The Master: Yes.

A. Not that I know of.

The Master: How long after you were there did they purchase the second machine for the Lycoming cam shafts?

A. I think the second machine was purchased at the same time as the first one. My recollection was that both those machines, **(2294)** the order covered those two machines.

Q. (By Mr. Michael, continuing): Were they delivered at the same time? A. I would say they wouldn't be delivered at the same time, because they were for two different shafts, and we certainly would ship the first one that we had ready for shipment.

The Master: Did you see this Lycoming machine there when you were there?

A. I haven't any real recollection of whether it was in at that time or not.

The Master: Do you recall whether there were any complaints about that machine?

A. No, sir, I never heard of a complaint about that machine.

Q. (By Mr. Michael, continuing): Did you examine your machine when you were there to see what effect, if

any, this emery dust was having on the machine? A. Yes, sir, I stated to the customer very positively that it was injurious to the machine, and that it was due to that emery that some of the parts were not performing the way that they should.

Q. Just how would this emery dust have a detrimental effect on any parts of the machine? A. Any dust abrasive of that kind would get into any of the bearings, either rotating bearings, or sliding, or anything there. It was almost an impossibility for the dust not to get into the bearings and the slides in that condition.

Q. Were all of the machines that you have listed here for us as being sold by your company paid for? **(2295)** A. Yes, sir. No—wait a minute. Yes, sir, every one of those 27 machines were paid for in full.

Q. Did you have any complaints from any of the purchasers or users of those machines? A. We had complaints from the Nash Motors Company on the first machine.

Q. What did you do about that? A. We replaced that with a brand-new machine. We recognized that machine was the experimental machine.

Q. The first one? A. The first one, and we replaced the entire machine.

Q. Did you have any complaints from them after that? A. We had men down there two or three times after that. After they had run the machine for a year, a season, they asked us to have a man go down there and check it over, and we made some—renewed some parts for them; but, later on they invited us to make a proposition for a third machine, and we had to compete with the Melling people on price, and we didn't get the order.

Q. I think you have listed there a total of what? 27 machines? A. 27 machines.

Q. Out of that 27, as I understood your testimony, you had complaints only from Nash as to the first experimental machine, and this further complaint that you just mentioned about Jackson Motor Shaft Company, is that right? A. That is correct.

Q. There were no others? A. I don't recollect any other complaints.

The Master: Didn't you previously state you had some **(2296)** difficulty with Reo with your machine?

A. Yes. But, that was all—they complained the machine would not cut off the amount of stock that was left on the stock, but that was so unreasonable that they practically voluntarily bought a second machine to take two cuts off that material instead of one. That was as much as 5/16 of an inch to remove, and, of course, the machine wouldn't do that. It was not built for that.

Q. (By Mr. Michael, continuing): You mean the forging was 5/16 of an inch oversize? A. Yes, we had that much to remove, and that was more than the cutters, or anything else, could do. That wasn't a complaint of the machine. With a reasonable amount of stock to remove, it would do it. Half of that would have been away beyond, for instance, what the Ford Company leave on their shafts.

Q. Did any of the users of your machines purchase second machines substantial periods of time after they bought the first one? A. Yes, sir. The Studebaker Corporation bought one machine, and they followed along with orders over a period of, I think—I don't know—it seems as though as I was always selling them the machines, either the cam machines, or crank machines, and that ran along over a period, I would say, over two or three years. They bought a total of 7 cam machines.

Q. And, did any of the other companies order second machines after they had the first machine? A. Yes, sir. The Reo Company ordered a second machine. I think that must have been a year after they ordered the first one. It might have been more.

Q. That was for taking the second cut, was it? (2297) A. No, sir. That was a different type of shaft. That is a different form; it was for a different shaft. Just what the detail of the difference was, I don't remember, but we fitted that machine up to turn the cams on a different shaft than what the first one was.

Q. Did they ever buy a second machine just to take a second cut? A. No, sir.

Q. What did they do about that? A. You are speaking about the Peerless now?

Q. No, Reo. You mentioned Reo buying a second machine after they bought the first. A. I was mistaken.

Q. Did Reo buy a second machine? A. Reo bought a second machine.

Q. Did they buy it to take a second cut? A. Yes, sir.

Q. What other companies bought second machines? A. The Peerless.

Q. Some time after they had the first? A. Yes, I would say it was at least a year, and possibly further. It was a new type of motor that they brought out, and required another machine, and they placed the order with us. We furnished it, and it was paid for.

Q. And, Studebaker did the same thing? A. Yes, sir.

Q. And, also, the Nash Company? A. The Nash Company. They bought for the Kenosha first, and the second one they bought for the Milwaukee plant.

Q. And, any other companies? **(2298)** A. No. The others that bought more than one machine placed the order for both of them at the one time.

Q. Do you know of your own personal knowledge whether or not all of these 27 machines went into actual production? A. No, I am quite sure that some of them didn't.

Q. Well, which ones didn't? A. The Willys Corporation, I think that was the name of the company, at Elizabeth, New Jersey, they never got operating. Their plant was—well, I don't know how—I think they went into the hands of the receiver before they even got operating.

The Master: Is that W-i-l-l-i-s?

A. "y-s."

The Master: "y-s."

Q. (By Mr. Michael, continuing): How about the other companies? A. The Cleveland Cam Shaft Machine, I never knew whether that got into production or not. I think it is very doubtful, because I never heard of them producing cam shafts to any extent. They never amounted to anything in the commercial field of making cam shafts.

Q. Well, you know about all the rest? A. Well, I didn't see them in actual production, because I didn't go to their plants at all, but—

Q. (Interposing): You didn't go to any of these plants? A. Yes. I was talking about the rest of them on this list, other than the ones I just mentioned. The Am-

stead Engineering, I never went to their plant. I never went to the Teeter Hartley plant. I did go to the Cadillac plant, the Packard plant, the Studebaker and the Peerless, and the Nash Motors, and the Reo, the Jackson; those are the plants I individually (2299) or personally visited.

Q. After your machines had been bought and installed in the plants? A. Yes, sir.

Q. And— A. (Interrupting): They were in operation.

Q. Were the machines in actual production? A. Yes, sir.

Q. And, you saw them and observed them in actual production in those plants? A. I did, yes, sir.

Q. Then, did the machines that you observed during these trips to these various plants perform in a satisfactory manner? A. Yes.

Mr. Farley: Well, that is leading, if your Honor please.

The Master: I don't think it is leading. It is a direct issue. It is in question here. I will overrule the objection.

Q. (By Mr. Michael, continuing): What was your answer? A. Yes, sir.

Q. And, can you give from your own knowledge the commercial history of these various machines; generally, the extent of the production turned out on them, just very roughly? A. Well, I don't know how many years they were in the Nash Company, in both the Kenosha and Milwaukee plants, but for a number of years they took care of their entire production of shafts required in those two plants. The Peerless Company, their entire production was taken care of by first one machine, and then when they required a different shaft, the entire (2300) production was taken care of by the second machine.

The Studebaker Company, I was very familiar with them, because I was in touch with them all the time selling other equipment, and they had seven machines, and they turned all of their production with those seven machines, and that was a very large production those days.

Cadillac Motor Company, they turned all of their production.

The others I am not so familiar with as to how much production they had, or whether they did all of their production on those machines. They might have had a different type of shaft than what the machine was equipped for, and they might have formed some of the cams on the shafts by some other means. If their production was small, they possibly would, instead of buying a new big production machine.

Mr. Farley: I move that be stricken, your Honor please, it is purely speculative.

The Master: Well, the witness is simply stating the limits of his knowledge with respect to that production there. I will let it stand.

Q. (By Mr. Michael, continuing): Aside, Mr. Gordon, from whether or not these machines in these various plants turned all or part of the production of the plants, what, roughly, would you estimate was the volume of the production on all your machines during all the period they operated? A. Well, I wouldn't attempt to estimate on number, other than to say there were millions of cams turned by our machines; many millions.

Q. In regular commercial production? **(2301)** A. In regular commercial production.

Q. What was the approximate price of all of your cam lathes? A. Anywheres from 4,000 to 5500 dollars, dependent on the equipment that was—the special equipment furnished with the machines, and the number of cams on the shafts to be turned.

* * * * *

(2378) Re-Cross Examination by Mr. Farley.

Q. Mr. Gordon, I believe you testified that the machine of yours which was sent to the International Harvester Company was guaranteed to be of first-class workmanship and material? A. Yes, sir.

Q. And that machine, I assume, was of first-class workmanship and material? A. I believe it was.

Q. I also understand your testimony to be that you know nothing about the difficulties they had with that machine at the International Harvester? A. Outside of what I believe I testified to in regard to an eccentric cam.

Q. You testified, I believe, when you were on the stand before, that you had endeavored to find out about the machine at International Harvester, but you could never get any information concerning it? A. I inquired about all the machines that we had out at all times, whenever I got an opportunity to get in touch with anybody, where the machine was located.

Q. Well, you did so testify before the Master here, that you had **(2379)** never been able to find out anything about the machine at the International Harvester Company? A. I do not just remember it; probably I did, if you have it there and would read that testimony I probably would remember it.

Q. At page 75 of the record I asked you the question: "Now, you had a similar experience with your machine in the plant of the International Harvester Company, did you not?" And your answer was: "I hadn't anything whatever to do with the machine that went to the International Harvester Company, other than to know that one was sent there, and of course my business was not restricted to the cam machines, and I was very busy on other things, and finally I started an inquiry as to what happened to those machines, or that one. I do not remember there was more than one machine." And at page 174 of the record, you testified, in answer to my question appearing at the bottom of page 173: "And didn't you have the same sort of difficulty with your machine at the International Harvester?" And you testified: "I never saw the machine at the International Harvester, and could not get any information from the International Harvester Company people. I probably could have." I understand your testimony to have been that your son was sent to the International Harvester Company to help them out of their difficulties? A. I do not believe I ever testified to that effect. I might have, but I don't remember it.

Q. Didn't you say that on your direct examination? A. I thought I testified he was sent there to demonstrate the machine.

(2380) The Master: I think that is what he testified to.

Q. (By Mr. Farley): Well, can you state whether or not you ever sent anyone, or anyone was ever sent by

the Gordon Form Lathe Company, to help the International Harvester Company with their difficulties with the Gordon machine? A. I don't know of anyone ever having gone to the Harvester Company in reference to any difficulties in connection with the machine after the machine was demonstrated and accepted by the International Harvester Company.

Q. I think you testified that you had read the testimony of the witnesses whom we examined in Chicago concerning the International Harvester machines? A. I did read their testimony, yes, sir.

Q. And would it be your testimony that those men were mistaken when they said that someone from your company came and helped to try to make the machine work and couldn't do it? A. As far as I know, they were mistaken. I don't know of anything; they might not have been mistaken, but I think they were.

Q. Well, didn't you make it a practice of a concern having difficulty with your machines to send someone in and try to remedy the complaints? A. Yes, sir, if we were notified that they were in trouble with the machines, we always sent a man down there to correct it wherever it might be.

Q. Well, any difficulties the International Harvester Company may have had with the machine would not have been on account of any poor workmanship or material in the machine; that would be true, wouldn't it? **(2381)** A. I think it would, unless an accident happened to the machine, and of that, I don't know.

Q. Now, on your direct examination you testified about a number of machines that—Gordon machines—that were sold to various concerns, and if I recall your testimony, you said you had gone to the Peerless plant to see the machines in operation there. You mentioned a number of plants, Peerless, I think you said you saw the machines operating, at Nash, Peerless, Studebaker, Packard, Cadillac, and Reo; is that in accordance with your recollection? A. That is correct, yes, sir.

Q. Who did you contact at the Peerless plant, do you recall? A. No, I don't.

Q. How about Studebaker, who did you contact there? A. Well, I contacted one party at the South Bend plant, I contacted quite frequently.

Q. Who was that, please? A. I cannot remember his name, but he was a man who testified in one of the cases that we had here.

Q. Cheney? A. Cheney, George Cheney, that was his name, yes.

Q. He is a personal friend of yours, isn't he? A. Well, he was a man who worked for me at one time, that is, if I remember right, I hired him, but I never knew him before the time I hired him, and I never contacted him outside of the plant organization.

Q. Who did you contact at Packard, do you recall? A. No, I don't remember who I contacted in reference to the cam **(2382)** machine. I contacted their engineers on the cam shaft machine when they tried to change that machine over from one type of crank shaft to another.

Q. How about Cadillac, do you remember who you contacted there? A. No, I don't think—the foreman of the department, I don't remember what his name was.

Q. How about Reo, do you remember who you contacted there? A. The general superintendent, I don't just remember what his name was; if I heard it I think I would remember it; Mr. Thiel.

Q. Mr. Teal—"T-e-a-l"? A. No, I don't think it was, I think it was "T-h-e-i-l," or, "T-h-i-e-l"; I contacted him, and a number of other people that were in the plant, foremen, sub-foremen, and so on.

Q. Just when was it you made your visit to these particular places? A. When was it?

Q. Yes. A. Well, I have no memory as to when it was, it is a long time ago. I would generally call on these people when I was in their vicinity, if there was any occasion for doing that; I was travelling in Michigan, Illinois, Indiana, Wisconsin, Iowa, selling other types of machinery.

Q. Do you remember what year it was, would it have been 1924 or 1922 or 1920, or how long after you sold the machine, do you recall? A. Well, I could tell you that in connection with the different companies, probably, I couldn't tell you when it was, but I **(2383)** could tell you how close it was to the time we put the machine in operation.

Q. Just when was it that you worked for Studebaker? A. Well, I can't tell you the date of that, but I can tell you

some of the circumstances in connection with it; it was at the time that Walter Flanders quit the organization and the Studebaker took the organization over from the E. M. F. Company; just what those dates are I don't pretend to remember.

Q. That was some time before you sold any machines to Studebaker, wasn't it? A. Oh, that was years before we ever thought of the machine.

Q. That is what I thought. A. Yes.

Q. Now, you were asked by the Court if you knew how many of the Gordon machines were in operation today, and you said you didn't know. As a matter of fact, you don't know of any place where any machine is in operation, do you? A. I don't, no, sir.

Q. When did you last see a Gordon machine in operation? A. Well, it is a number of years ago; I wouldn't attempt to say when that time was.

Q. What is the last Gordon machine you saw in operation; the one at the Ford plant? A. You are right, that is correct, I haven't seen one in operation since then.

Q. Now, you testified that you saw a Gordon machine operating in regular production at the plant of the Jackson Motor Shaft Company, did you not? **(2384)** A. I did, yes, sir.

Q. Did you read the testimony of the witnesses Otto H. Schultz, Bert Weisel and Frank Steinke, in the interference record before you testified here yesterday? A. If I did, it is a long while ago that I read it, but I remember those individuals testifying. I was there when they did testify; that is, I don't know of any action that was taken that I did not attend.

Q. Do you recall that Mr. Schultz testified, as appears on page 105 of this record, with respect to the Gordon machine: "We did everything we knew how to make those machines work before we took the matter up with Mr. Gordon, and he then sent in Mr. Goddard, and we turned over the tool room and gave him a man and told him to stay right with him and help him make those machines work," and the question was asked: "Do I understand the first machine never did work? A. The first machine worked and run cam shafts, but the class of work obtained from the machine that came off the machine was so bad we had

to take it off the machine and go back to the method of rough grinding, for the cost on the job of scrap was so high we could not afford to run the machine on the job." Then he was asked: "You are now speaking of the first machine? A. Yes. Q. The one Mr. Gordon's son tried to operate? A. Mr. Gordon's son gave up the job. I think he came back with the second machine the second time, that is, Mr. Gordon's son, the second machine I think he came back for a short time, he was sent, I think, some place else, and I think there was another mechanic Mr. Gordon sent in the meantime; I don't remember his **(2385)** name. Q. Speaking of the first machine that was on the Ford cam shaft? A. Yes." As a matter of fact, didn't each and every one of those three witnesses testify that they never succeeded in getting any satisfactory shafts off the Gordon machine when they attempted to operate it to cut Ford cam shafts?

Mr. Spohn: Now, if your Honor please, I appreciate the fact this is cross examination, but it does not seem that the question to the witness as to whether those witnesses did not testify so and so is correct cross examination. He may not agree with the witnesses. He has the testimony right there.

The Master: Yes, it will speak for itself.

Q. (By Mr. Farley): Well, you did not review that testimony before you testified here yesterday, that is my understanding, that is true, isn't it? A. No, sir, I did not. I do not know how many years ago it was I saw that testimony.

Q. And your testimony was that you were at the Jackson plant just for one day, and as I understood your testimony you went there, did you not, because of the complaint that was made about the machine; that was the purpose of your being there? A. We were having machines made here in Detroit, and I don't remember whether it was on the way to Detroit to see about more machines, or just what the circumstances were that made me stop over there. I don't remember whether it was prior to the time that I had men go there to take care of any trouble that they were experiencing, or whether it was after I had men on the job.

Q. Well, you knew they were having trouble with the machine? **(2386)** A. I knew they were not satisfied with the machines, yes, sir.

Q. And wasn't that really the purpose of your visit there? A. It possibly was; I am not sure whether that was before or after we had men there.

Q. When you visited the Peerless and the Studebaker and these other plants, isn't it a fact that the reason for your call was because of complaints made about the machines? A. It positively was not.

Q. Now, you testified that the Jackson Company was the only one that you could recall where they were attempting to turn the sharp-nosed cams, as I understand your testimony; that was your testimony, wasn't it? A. I think it was.

Q. Did you ever check on the proposition at Studebaker as to the performance of your machines there? A. Yes, sir.

Q. The Studebaker had a very broad nose cam, did they not? A. I don't think it was exceptionally broad nose.

Q. It was quite similar to the Nash cam, wasn't it? A. I don't think so. My memory of it is, I haven't seen one for a long while, but—

Q. (Interposing): Did you ever see them operating your machines at the Studebaker plant, one machine taking a rough cut, one Gordon machine taking a rough cut, and another machine taking a finishing cut? A. I have.

Q. As a matter of fact, the output of those machines was 14 shafts an hour, was it not, on the roughing cut, and 14 an hour on the **(2387)** finishing cut? A. No, sir, it certainly was not; that is, that was not the limit of the production.

Q. I think I asked you once before as to all of these machines which you testified were sold by the Gordon Company; how many machines was it, 23, wasn't it? A. 27, if I remember right.

Q. 27. Each and every one of those machines was sold outright by you, were they not? A. They were.

Q. And in no case did you make it a practice to attempt to get so much per shaft for each shaft turned on the machines?

Mr. Spohn: If your Honor please, I do not think that question is relevant and material to this issue here.

Mr. Farley: I think it is decidedly material.

The Master: I will listen to the answer.

A. No, sir, at no time.

* * * * *

(2452) The Master: Mr. Gordon, you were here through all, practically all of the testimony submitted by the defendant with regard to mechanical matters; I think the only time you left was when the accounting questions were being taken up?

A. I believe I was here all the time.

The Master: You heard all of the testimony with regard to the straightening operation which is claimed to have been required on the Walcott machine, but not on the shaper?

A. Yes, sir.

The Master: Do you as a mechanic have any opinion upon that issue?

A. Yes, sir, I have.

The Master: What is it?

A. The same requirement for straightening operation would exist in any kind of a machine that was going to form the contour of the cams. I might state, and I think I testified to that effect, that when I went to the Ford Company on the demonstration of the Gordon cam lathe, we found that the centers in the ends of the shaft were very poor shaped. By that I would like to illustrate—let me have one of those shafts.

Mr. Farley: There are plenty of shafts there (indicating).

A. I am talking about this shaft; I do not know what the others might be; I have looked at this.

Mr. Michael: Which one are you referring to?

A. The center in that cam shaft, Exhibit AAA, would be considered a very proper center, that is it is ample size, has plenty of clearance with the tip of the center with the hole that is **(2453)** drilled at the bottom, and it is smooth, it hasn't been torn or ragged or anything, it is a real good

bearing for a center. Now, the angle of the centers in the shaft that we received to make our demonstration on the Gordon, sometimes the bearings, or the center would bear down near the bottom, sometimes it would bear near the top, sometimes the centers had been worn until they were grooved like that (indicating), and they would not fit, but in spots around, different places in that center. Now, these centers were in splendid condition, the shaft was in excellent condition as regards running true, good centers and accuracy in the shape of the bearing, the center bearing. Now, that shaft in that condition is the best that can be obtained generally for the succeeding operations. You have got to prepare your shaft directly for them. Now, if that shaft had been bent, which was a condition in the shafts that we had, not only was it bent but the bearing varied in size. Some of the shafts had bearings we could not get in our steady rest, they were so large. Others were so small that there was nothing to hold the shaft except within the limit of the error in the diameter, so that the work of turning the cams would permit the shaft to spring back and forth and the steady rest really wasn't acting as a steady rest to the full extent.

Now, if you had a shaft that was bent and it was walking around, or floating around in a steady rest that did not fit the job, then from pressure of the tool, speaking of the Ford shaper, the pressure of the tool tended to push that down, spring it down, if it was capable of doing it. On the T **(2454)** shaft that might have been possible, but the A shaft it is very doubtful, but it might spring the T shaft down so that that always pushed down to the bottom, or in that proximity. That is, if the support was a half circle and if the shaft was smaller it would push it down to the bottom, as I show in that sketch, and it might float sideways some because it was loose here and loose here (indicating).

The Master: On each side?

A. On each side, but the pressure of the tools might push it down here (indicating), but when it was free and there was no load on, cutting tool load, it would spring up away from the bottom as well, and it would just simply—the center of the shaft would travel around in a circle.

Now, apparently they were satisfied with that condition in the T shaft, but with the improvement demanded in

the production of these parts, I do not think there is any doubt but that that would have been a proper operation to have the shaft straight when it went into the machine in the first place, regardless of the type of machine. A machine for turning the cams is not supposed to be a straightening machine, and that is what they demand, when they put a piece of work in a machine of that kind and demand that that spring it to a different contour than it was before, while they are performing that operation.

The Master: Of course the Walcott machines were used first on the Model T shafts, and according to most of the testimony in the record the straightening operation was added at the time the Model T shafts were being turned?

(2455) A. My judgment is, as a mechanic who has handled this work for a long while, that it was a very crude way of doing the work even before that. The shaft should have been straightened regardless of the machine. There is no more occasion of straightening it in one machine than there was for straightening it in another machine.

The Master: Well, you say there is some difference between the two machines because of the fact that the shaper does tend to correct any springing of the shaft, at least while the operation is being performed?

A. I do not admit that; I say that might be possible, but I doubt it very much. Unless the tools are very, very dull, they would not press that shaft down. If those tools were sharp and the amount of metal—now, as I remember in the testimony it was testified that they took two cuts on this work. Now, what happens during the first cut is immaterial, but the amount of metal that is left on for the second cut is a very small amount, so that unless the tool was very very dull, way outside of reason, taking that light second cut, and that is the one that registers, it would not spring that work down in the shaper. In other words, the cams would not be concentric with the bearings.

The Master: You think further even if the shaper did correct the springing on the Model T shaft, that it would not have done so when used on the Model A?

A. Because of the greater stiffness of the shaft.

The Master: Because of the greater stiffness of the shaft?

(2456) A. That is true. In the small amount of the cut, that is the second cut on the shaper, it would mean that the pressure applied to take that light cut was almost negligible, with a reasonably sharp tool.

The Master: There is another thing I wanted to ask you. There was considerable testimony by witnesses for the defendant, with your machine used on the Ford shaft with the pointed nose, that as the tool turned around the point of the nose it required a very large swing of the tool and that that was the principal difficulty, as I understood it, that the Ford Company experienced with your machine. I think Mr. Brush testified that if you had an absolutely sharp pointed cam, without any arc whatsoever in the nose, that the tool would have to swing around in an infinitely short time, and it would be impossible to cut such a cam on your machine.

A. It would depend, of course, on included angle at the top of the cam. I do not know whether you understand what I mean or not. However, we will consider that (indicating) is the point of the cam, and it is a sharp edge. The included angle here makes that comparatively easy. Now, I say a sharp edge, that is a sharp edge also (indicating), although the included angle is much greater, so that we have got to swing from this point around to this point (indicating). On the cam that was as sharp as that, you have to swing from here all the way around there, and a knife edge on the top of that cam would reduce the time in which you could go around there. That is perfectly true, and the rounder, the nearer you get to a cylinder the easier it is, until you get to the cylinder where **(2457)** you have no rocking movement at all, and you get a knife edge, a very sharp knife edge with a very small included angle between the sides of the nose you get to a point where you could not go around in the Gordon construction, but that is not the type of cams that are used.

Now, we did turn, I don't know how many, I won't attempt to say how many, but we did turn a great many cams of the Ford shaft. They speak about what you have

got to do, how fast you have got to travel to get around here. It came out very distinctly I think before the other court that you have a condition such as this, for instance in the Melling machine you have a cam down here, suppose you had that, that is one position of it, and here is the other position of it. You start here and you swing from this point way round up here, you haven't any time to do that if that is a straight line, you cannot cover that all in no time at all, and that is what you have got in a Melling machine; there is a fault in pretty near anything, you cannot make everything universal. Those are conditions that are not met with in regular practice. We could, if it was required to do that, we could make special equipment to do that. There is no real trouble to accomplish that, but you are making a practical marketable machine that is to be used universally in the industry.

The Master: You agree then that if the cam is sufficiently pointed that your machine would not effectively cut it, but you disagree that the Ford cam was pointed to that extent.

A. That is correct, yes, sir, because we have turned many of them.

Mr. Farley: Ford cams.

(2458) A. The Ford cam, yes, sir, and it was so testified by those who did turn them.

Mr. Farley: By whom?

A. By the—

Mr. Farley: Mr. Herklotz?

A. By the witnesses that were mentioned here yesterday I believe by yourself. I do not remember what their names are.

Mr. Farley: I will just ask the Court at his convenience to read the testimony of those witnesses.

The Master: Yes, I intended to do that.

A. My memory is that they testified that they had a scrap loss of 20 to 25 per cent; I am quite sure that that was what they testified. Now, if they had a scrap loss of 20 to 25 per cent, what they meant was that the shafts were not correctly formed; it does not mean that they had to

throw the shaft away; it might take another operation and corrected the shaft, but as it went from that machine 20 to 25 per cent of them were defective. That was the testimony, as I remember it.

Now, I know that they turned them, they used them for months and that must have meant that there still were a lot of them that were correct.

Now, there are a lot of reasons why they were defective and they cannot all be placed against the machine. That is done regardless of what type of machine. There are no machines made where every one of them go through and meet all conditions perfectly satisfactory. Machines that have been produced by some of our best manufacturers, Pratt & Whitney Company, for instance, I remember very distinctly we sent two lathes back to them. Pratt & Whitney are one of the **(2459)** leading machine tool manufacturers in the world, and those lathes were very defective. The third one we got was perfectly satisfactory. Kearney & Trector, of Milwaukee, the first milling machine we bought from them we could not keep that, we had to send it back; that is to be expected. I might say the same thing about a Ford automobile, some of them are good and some of them are not so good. I have heard of that, I have never owned one, but I have heard it said.

* * * * *

Todd L. Moise was thereupon recalled as a witness herein, and having been previously duly sworn, testified further as follows:

Re-Direct Examination by Mr. Spohn.

Q. You are the same Todd L. Moise who has testified heretofore in these proceedings? A. Yes.

Q. And have you attended every hearing in this accounting matter except, as I remember you testified, you were not here one-half day, and you were not present when these depositions, or the testimony was taken in Rockford or Chicago, is that correct? **(2460)** A. That is correct.

Q. Have you read over that testimony? A. I have.

Q. Now, when you were present at these hearings did you hear and observe the witnesses? A. Yes.

Q. And have you analyzed the testimony and exhibits offered in these accounting proceedings? A. I have, carefully.

Q. Did you read the parts of the printed transcript of the trial before Judge Tuttle in so far as it affected accounting matters? A. I did, I think I read all of it that related to accounting matters; I tried to.

Q. And you state you have analyzed the exhibits that have been offered in this hearing which related to accounting matters? A. Yes, sir.

Q. Have you seen the defendant exhibits, statements of account, Exhibits A, B and C? A. Yes, sir.

Q. Did you analyze Defendant's Exhibit C-1? A. I did.

Q. Have you analyzed Defendant's Exhibit 301? A. I did.

Q. Did you examine Defendant's Exhibit 302, another report that had substituted pages for your report? A. I did.

Q. Were you present at the defendant's plant when there was a demonstration made of the Ford Westinghouse machine and the **(2461)** Melling machines? A. I was present, yes.

Q. And were you present when the inspection was made of track 297 in Defendant's plant? A. Yes, I was.

Q. Now, you have filed in this matter, the record shows, Exhibits Z, Z-1, and Z-2? A. Yes, sir.

Q. As a result of the evidence taken in this hearing, have you revised your reports heretofore filed? A. Yes, I have revised the reports.

Q. And since the adjournment on February 4th, when the defendant finished the case, other than for the taking of the testimony in Chicago and Rockford, have you made a final report? A. I have made a final report and I have it with me.

Q. Will you produce that report? A. Here are six copies. I will make sure this is the right one.

Mr. Spohn: I ask that that report which the witness has just handed me be marked for identification as Exhibit Z-3.

* * * * *

Q. This report, which has just been marked for identification as Exhibit Z-3, on page 1 shows a total profit of $959,696.88? A. That is correct.

Q. What is the period covered by this report, the period of time, Mr. Moise? A. From June 16, 1925, to March 15, 1931, inclusive.

(2462) Q. On page 1 of your report it sets forth three different figures which go to make up this total of $959,696.88, the first of these figures is $895,793.95. What does that figure relate to? A. It relates to the minimum profits from June 16, 1925, to February 3, 1931, exclusive of the production assigned by the defendant to the Pioch machines.

Q. In the computation of that profit, what pages of your report are referable to and support that computation? A. It is supported by pages 2 to 18, inclusive, of this Exhibit Z-3.

Q. Now, the second figure on page 1 of your report is a profit of $32,629.23. What period does that cover? A. That covers the period from May 16, 1930, to February 3, 1931, and it represents the profits, gains, and so forth, on the production assigned by the defendant to the Pioch machines during that period.

Q. What pages of your report support that computation, or are referable to it? A. Pages 19 to 21, inclusive.

Q. Now, the third figure on page 1 of your report of profit, gains and advantages, is $31,273.70; what does that figure represent? A. That is from the period of February 4, 1931, to March 15, 1931, and it represents the profits, gains and savings and advantages to the end of the infringing period after the February 3rd, 1931, including the first two items.

Q. And the total profit, as I pointed out, is set forth on page 1, $959,696.88, is that right? **(2463)** A. That is the total.

Q. What have you to say with respect to this report; what did you base it upon? A. Well, that report is based upon the evidence before Judge Tuttle, and upon all of the evidence and exhibits presented in this—all of these accounting hearings.

Q. Now, you have presented three reports heretofore, as I pointed out, Exhibits Z, Z-1 and Z-2; what have you to say with respect to Exhibit Z-3; is that a complete report in itself? A. Exhibit 3 is entirely complete; where

Exhibit Z-3 duplicates Exhibits Z, Z-1 and Z-2, they are included, so that the report is complete.

Q. In other words, no reference is necessary to these prior reports? A. None whatever.

Q. Now, in the compilation of this report, Z-3, what have you to say with respect to the principles upon which this report has been computed, particularly with reference to your report Z-1? A. Why, the principles are the same, except that the calculations are modified, based upon some changes arrived at through evidence given since the preceding reports were made, since Z-1 and Z-2 were made.

* * * * *

(2471) Q. On pages 6, 7 and 8,—and I take it those three sheets all relate to the same subject matter, and that is the determination of burden ratio to productive labor, is that right? A. Yes.

Q. Will you state where you obtained those burden rates? A. I have a note so as to get the exhibits.

Q. The second line of this page 6 refers to Plaintiff's Exhibits X-1, X-2 and X-3? A. That is Exhibits X-1, X-2 —that is right; it is entered in here. I had a note, and didn't put it here. These are taken from Plaintiff's Exhibits X-1, X-2—taken from—

(2472) Q. (Interposing): And, X-3? A. Well, those were presented by defendant, were they not?

Q. They are Plaintiff's Exhibits. A. I didn't know. They were presented by defendant. Plaintiff's Exhibits X-1, X-2 and X-3 for all periods subsequent to December 31, 1925; but, as Exhibits X-1, X-2 and X-3 did not include any preceding period, the period from June 16, 1925, to December 31, 1925, is based on data obtained from cost summary cards previously presented by defendant. In other words, the special data furnished began with 1926.

Q. Is this computation as you have it on pages 6, 7 and 8 of Exhibit Z-3 comparable to like computations in Exhibit Z-1? A. It is identical.

Q. And, in that report your percentage of overhead or burden was applied to the direct labor rates? A. On an annual basis so far as possible.

Q. As far as this report is built up, what was your standard of comparison for the production of the T shafts

on the Melling machine? A. The T shaft comparison of the Melling machine was based on the Ford shapers.

Q. Ford cam shapers? A. Ford cam shapers of the type used; the actual ones used.

Q. On the production of the Melling machine on the A and F shafts? A. They are compared with Landis grinders.

Q. For both? A. For both the A and the F, the standard of comparison is Landis grinders.

Q. And, that is the same standard you used in Exhibit Z-1? A. It is.

* * * * *

(2478) Q. Mr. Moise, pages 17 and 18 of your report, will you turn to those pages. I understand those pages set forth tabulation of cost summary cards used by you in preparation of this report? A. Yes; all of the cost summaries furnished by defendant. And, this is the same as Exhibit Z-1.

Q. I understand that these cost summary cards have all been identified in your report with the same exhibit numbers as they have in this proceeding? **(2479)** A. They have.

* * * * *

(2480) Q. Now, Mr. Moise, you have testified that you are a senior member of the firm of Moise & Burgess? A. I am.

Q. Certified Public Accountants? A. Yes, sir.

Q. You have your office in Elyria, Ohio? A. Principal office in Elyria.

Q. Your principal business in your accounting, what does that consist of? A. Of course, the principal business of most accounting firms is supposed to be auditing, and, of course, that is a very big factor in ours, but we specialize in cost and financial analysis, the training of cost departments, and the preparation of data from proper cost records with the object of effecting economies and improving methods, and so increasing profit of our clients.

(2481) Q. Do you have an office in Cleveland, Ohio? A. I have an office there.

Q. How long have you been practicing public accounting work? A. About 17 years.

Q. Prior to that time what was your occupation? A. I was with the steel corporation, a subsidiary of the steel corporation, the National Tube Company, in an executive accounting and financial position.

Q. Assuming, as a matter of law, that in these proceedings, savings, gains and advantages derived from the use of these infringing machines must be determined with reference to standards of comparison, consisting of the Ford cam shaper on the T shaft production, and the Landis grinders on the A and F shaft production. Does this report, Exhibit Z-3, set forth and reflect these profits for the infringing period? A. It does.

Q. What have you to say with respect to your report? Does it contain profits which you would have an opinion as to whether they are conservative or not? A. I think they are conservative. An effort has been made to make them conservative, and not to take any factors in it which might have been used otherwise.

Q. In building up this report what have you to say with respect to the accounting principles which you followed? Are they the best accounting principles, in your opinion? A. I think they represent established and recognized accounting principles, and the best possible obtainable under the circumstances.

Mr. Spohn: I will offer Exhibit Z-3 in evidence, your **(2482)** Honor, please.

The Master: I will admit the Exhibit.

* * * * *

Q. (By Mr. Spohn, continuing): Now, Mr. Moise, you were employed in this matter as an expert accountant, and what did you understand your duties were in the preparation of your report, Exhibit Z-3? A. That and one or two other matters in connection with this are so important as to clearness of expression, and also as to brevity of expression, that I have made some notes with reference to it, which I would prefer to read.

To make a fair and impartial analysis of the defendant's accounts as filed, of all the evidence and exhibits offered in this case, and to make a report to the Master which I consider the proofs require; it is common practice for accountants to be called upon to make analyses of costs and profits, and it is not at all unusual for them to

work from data that is not at all complete. Their ability to do so and to get reasonable results acceptable to others, including the Federal tax authorities, is the result of their training and (2483) specialization in such work.

An accountant is not an advocate. It is an accountant's duty merely to set forth facts as he finds them and to use his best judgment in order to either get the facts or substitute reasonable estimates when definite facts and figures are not available.

When making a comparison between two methods of operation, the fundamental requirements in any fair comparison is that similar elements of cost, when they exist, shall be used in stating both sides of a question and it is, in my judgment, not at all good accounting practice to use the cost for a particular element or expense on one side because the figures are available and to completely ignore a corresponding expense, known to exist, because the exact cost is not available. It is always possible to secure a fair estimate of an unknown cost and use it where the exact cost is not known. Failure to do so makes the comparison utterly valueless.

Now, as to the things which an accountant in this case should, in my judgment, try to determine and those which he should leave to the attorneys; in this case the standard of comparison is based upon a question of law and not upon one of accounting. Had there been other machines actually used by the Ford Motor Company at the time of infringement for exactly the same purposes, that is, the reduction of the A shafts, then the accountant might well have entered into the question of standard of comparison, but such was not the case; and, therefore, the accountant must be guided by his attorneys on the standards of comparison used. On T shaft production, (2484) the Ford cam shaper had been actually used.

However, when it comes to a question of speeds of various machines, of the inclusion of operations and of certain expenses set forth, it is the accountant's duty to do what he customarily does in the course of his business; and, that is, to carefully analyze all evidence presented, try to weigh each piece of evidence, and form his own judgment as to these matters.

In an effort to do this, I have not only listened to the testimony throughout the hearings, in this case, but have

read very carefully the more than 3,000 pages of evidence and have also read portions of the printed record of appeal during the hearing of which I was not present. The machine speeds, the operations and inclusion of expenses on the one side or the other, are, as I have used them, the result of my considerate and careful analysis and judgment of the testimony offered.

Q. Well, now, you have testified that you had experience in cost accounting work for concerns making automobile parts? A. Oh, yes.

Q. Did you hear the testimony of Mr. Russell and Mr. Hogelan with respect to defendant's accounting records, and methods of cost finding? A. I did.

Q. What use, in your opinion, would have been detailed cost records in this case if the same had been available? A. That brings up a little question of what are meant by costs. Mr. Russell spoke some on the subject. Generally speaking, costs are found and determined for two purposes:

(2485) First, to determine actual cost so as to inform management whether a profit or loss results, and whether the particular item can be bought more cheaply than it is being produced.

But, of far greater importance, and in my experience a matter which has resulted in very large dividends to those using them, cost information, correctly derived by men trained in costs and in analysis of operations, in elements of overhead, and their relationship to direct labor, can be passed on to those supervising operations, in order that unnecessary expenditures may be curtailed to a minimum.

It is perfectly true that on an assembly, automobile assembly line, the movement of the cars being assembled or on a motor assembly line, the movement of the motors being assembled controls production, each man, or small group of men, having to do their work as the part passes them. If anything happens to the motor or the car being assembled, it is lifted bodily out, so as not to materially interrupt the work.

In the Ford cam shaft department, three days' supply of cam shafts are on the conveyors and if anything up to 22 machines are specified for a single operation, the num-

ber used can be varied anywhere from these 22 down to 2, depending upon the rate of production. Also, it is, at least theoretically, possible to get a full day behind because of machine trouble and catch up.

It will be noted that the purchases of machines by the Ford Motor Company appear to be based, even with a 20 percent allowance, on taking care of production in 16 hours or two **(2486)** shifts, whereas the plant normally, or at least frequently, runs 3 shifts. Certainly definitely comparative data showing the production of machines from time to time and the number of machines used for varying productions, would be of the utmost value in cutting out the use of unnecessary machines.

It would be absurd to continually make detailed motion time studies of each operation, but it is also true that motion time studies, used reasonably, have their place. Some men easily and naturally, and without undue fatigue, get out large production. Others get out smaller production and become exceedingly weary. Most men who work readily and smoothly and most foremen themselves, do not know just why these men are better workers than others.

I have been able to compute profits realized by the defendant as set forth in Exhibit Z-3 from all the evidence presented in this case. Were the following records now available for the whole accounting period, such computation could have been made much more easily and with less dispute between the parties:

First, time studies taken frequently enough to determine turning time or machine speed.

Second, actual production records to determine actually the shafts turned, and selling and inventory records to check up and control production records.

Third, actual production records segregating production by each type of machine during periods when more than one type of machine was available.

Fourth, total departmental overhead records and the elements going to make up this total, expressed in dollars.

(2487) Fifth, payroll data on machine operators.

Sixth, records of machine hour operations.

Seventh, tool costs. When originally purchased, repair and maintenance costs, and tool life.

Eighth, complete repairs and overhaul costs of all machines of all types.

Q. Does your report, Exhibit Z-3, charge a straightening operation to the use of the Melling cam lathe on either its production of T, A, or F shafts? A. It does not.

Q. You have heard all the testimony on the question of straightening, you testified? A. Yes.

Q. Have you considered it in Defendant's Exhibits 13 and 14 attached to Exhibit C? A. I have.

Q. Generally speaking, in your work of cost analysis and cost derivation, are you called upon to determine just what operations are attributable to various machines? A. Frequently.

Q. What are the sources of information upon which you make such determination? A. Well, records, time studies, statements of foremen, of those in executive positions, payroll data, and when the investigation is current, actual personal investigation and observation.

Q. And, then, from that data you do what? A. From that data I, with my trained judgment as an accountant, determine what should be included in the result.

Q. As an expert accountant in this case, and having heard all this (2488) testimony on the question of the straightening operation, having considered all the exhibits and all the testimony, do you have an opinion as to whether the cost of this straightening operation on shafts immediately prior to turning them on Melling cam lathes should be charged to the use of the Melling machines? A. I have such an opinion.

Q. What is your opinion? A. It should not.

Q. Why should it not? A. Well, I have gone through all of the testimony on that subject, and made 50 or 60 notes, which it is not necessary to go into now, but briefly, the straightening operation is claimed by defendant to consume a minimum of a half-minute. This is considerable time compared to the turning time on Melling machines, and is a very important factor if the operation were really required upon adoption of the use of the infringing machines.

Defendant's original statement of account, paragraphs 23 and 24, did not include a straightening operation. Its amended statement of account, Exhibit B, claimed this operation for the first time.

Exhibits 15, 16 and 17 all list straightening as preceding rough grinding center bearing. This is also true of Exhibit 214.

The only operation sheet in which straightening does not precede rough grinding of center bearing is in Exhibit 14, but this sheet may have this operation reversed, just as an operation was reversed in the immediately preceding H series.

(2489) Now, I would refer particularly, perhaps, to the evidence regarding the steady rests in the shapers: the testimony of Mr. Pioch with regard to that, in which he stated that such difference as may have existed, if it did exist between the two machines, could have been covered by additional steady rests very readily; to that by Mr. Brush, in which he stated he did not know how many rollers the steady rest had, but that 3 rollers would have prevented any requirement for straightening, and that 3 rollers were common practice long preceding the time of infringement. The fact that Mr. Achton, who was production superintendent, said they were not straightening T's in 1927. Of course, that is no proof they were not straightening them before. But, he said they were not in 1927, and that he put the operation on A because of the difference in the—primarily because of the difference in the bearing diameter and the barrel diameter of the shaft which caused, I believe, more warping and heating.

I have a lot of notes about that, because I have considered this with the greatest care, being such an important factor in here, and I can not see any possible reason why it is an element of cost that is due to the adoption of the Melling machines.

Q. The adoption of the Melling machines as such? A. As such.

* * * * *

(2494) Mr. Spohn: Shall we proceed, your Honor?
The Master: Yes.

Q. Now, Mr. Moise, in your report, Exhibit Z-3, I notice you have made an allowance of factory overhead of burden? A. Yes, I have.

Q. How is that computed? A. From data supplied by the defendant and set forth on pages 6, 7 and 8 of this Exhibit Z-3.

Q. In your opinion does your method of computing this overhead, as it is reflected in your Exhibit Z-3, conform to the best accounting practice? A. It does.

Q. Why? A. I am a little particular about this one, again. The determination as to which elements of factory burden are affected by a change in equipment and personnel and the extent to which each is so affected, must be made—

(2495) Mr. Farley (Interposing): Now, if your Honor please, I feel the witness has gone about as far as he should be permitted to go in reading these prepared statements. It seems to me it is too much like a witness reading the brief in the record. I think that question of Mr. Spohn's certainly admits of an answer without the witness reading a prepared statement.

Mr. Spohn: If your Honor please, the witness here is an expert and I assume that we could put in Exhibit Z-3, the main report, consisting of 20 pages, by going through each number and each item and showing its relationship to others, but here is an expert on the stand and he is giving his reasons why he used the overhead figures he did, and his methods, and it would seem to me, if he has prepared notes and has carefully tried to summarize what he is to say, like any other witness, he ought to be permitted to respond to the question by reading his notes. There is nothing wrong, he is reading his own notes.

The Master: I think I will let him read this. I do not think it will do any harm. It might if he were testifying to facts, but when he is testifying to matters of opinion, I think it is satisfactory.

A. (Continuing): —must be made in the light of circumstances in each case. If one machine merely replaces another for the performance of the same operation, very few elements of overhead would be likely to be changed.

Even if there is a difference of one or two or three machines for a relatively short time, most of the burden **(2496)** elements might be unaffected. However, if a change of any kind increases or decreases considerably the number of machines and the number of employees, and particularly if such a change is a permanent one, in that it lasts over a period of years, many more burden accounts are affected.

In the present instance, as far as the Model T production is concerned, we are considering the change from shapers to Melling lathes. The fact that the Melling lathes produced 50 per cent more shafts per hour than the shapers

meant that eight less lathes were required and four less operators on each shift. In the case of the Model A and tractor shafts, we are making a comparison over a period of years between Landis grinders and Melling lathes. Nearly three and a half times as many grinders as lathes would be required, and as one man is required for each grinder and one man operated two lathes, the grinding operation would require seven times as many men as the operation of the lathes. This means that 76 grinders would be required to do the work of 22 lathes and 76 operators on each shift would be required for the grinders as compared with 11 operators on each shift for the lathes. The operation performed appears to be a somewhat difficult one. Not only would such changes have a very considerable effect upon many of the elements of overhead within the department, but they would also materially modify the demands of the department upon non-productive departments such as general maintenance, tool rooms, and so forth.

The defendant has recently presented a current schedule of elements entering into its factory overhead, and while the **(2497)** elements may have been somewhat different during the period of infringement, it is worth while considering the present element, excluding, of course, social security taxes which were not in existence during the infringing period. In order to do so, it might be well to divide these elements into three groups,—first, those which would probably not be affected at all by changes in machines used upon the cam shafts; second, those elements which over a long period of time would be affected almost in direct proportion by the number of employees, and, third, those elements which would be affected in whole or in part by one or more of the following factors:

Number of machines.
Number of employees.
Cost of machines.
Space occupied.
Electric current used.

Generally speaking, these elements can be divided into the three groups, as follows:

In the first group:

Administrative salaries.
Depreciation of land improvements.

Depreciation of freight car equipment.
Depreciation of locomotive equipment.
Experimental engineering and designing.
Final inspection.
Repairs to land improvements.
Repairs to freight car equipment.
Repairs to locomotive equipment.

(2498) In the second group:

Factory supervision.
Miscellaneous manufacturing expense.
Expense tools.
Insurance—employees' liability and compensation.
Sweeping and cleaning.
Miscellaneous service for employees.
Timekeeping, payroll, and factory clerical salaries.
Power operation—heat, light and power (in part).

In the third group:

Depreciation of buildings.
Depreciation of machinery.
Depreciation of durable tools.
Depreciation of factory and miscellaneous equipment.
Depreciation of power equipment.
Insurance.
Moving, and re-arranging department.
Power operation—heat, light and power (in part).
Repairs to buildings.
Repairs to machinery.
Repairs to durable tools.
Repairs to factory and miscellaneous equipment.
Repairs to power equipment.
Taxes—state, city, county.

Numerically, the first group covers a considerable portion of the overhead elements, but they by no means represent a very important proportion of the total cost. Much has been said about administrative salaries not being affected, but the **(2499)** charge for such salaries is never, within my experience, anything but a negligible portion of the total factory overhead. If we assume that the expense so charged to the factory totaled one million dollars a year and that in the factory there were 50,000 productive

employees, the proportionate salary charge would amount to but $20 per employee per year or seven cents per employee per day,—but one per cent of productive labor and considerably less than one per cent of the total overhead.

The depreciation and repair items in the first group cannot possibly represent anything but a very small portion of the total overhead, and this same is probably true of experimental engineering and designing. Final inspection would probably be the largest single item and the only considerable one in the first group.

In the second group, factory supervision would probably be the largest item, and in a great many plants it is the largest of all overhead items. Because this item is so important its relation to number of employees should be considered. Over a period of years the factory supervision changes almost directly with the number of employees. As a matter of fact, the prime duty of foremen and general foremen is the supervision of employees and foremen for a given class of work can supervise efficiently just so many men. As the number of employees increases or decreases the foremen increase or decrease likewise. It is true that one man may be added without increasing the number of foremen, but at some point the addition of one man will call for another foreman, because the (2500) force under him is becoming unwieldy. It would not be fair to charge the entire foreman against this one man, although he was the immediate cause of the foreman's employment. The only fair method for distribution of supervision is on the basis of men employed, because that is the basic factor which governs the number of foremen and the amount paid them.

To illustrate this in the case of a change from Melling lathes to grinders:

If we assume one foreman for each ten employees, the addition of 65 employees per shift would add between six and seven foremen on each shift at a total cost of somewhere in the neighborhood of $4,000 per month, which would be a very considerable factor in departmental overhead.

Some of the other elements in the second group are of considerable magnitude in many plants and in total this group is very important. As an example, during that part of the infringing period in which A-6250 shafts were made, the tool costs for the grinders would probably have exceeded $60,000—I have made a calculation of my own of

that—while that for the Melling lathes would have been a little more than $4,000.

When the third group is considered, it is true that the elements therein are not affected primarily by the number of employees, although this has some bearing. The depreciation items are affected primarily by the number, cost and life of machines, space required, and by the power required to operate them. The cost of machines in the long run affects insurance, but this is a very small item. Generally speaking, the repair items are affected by the same factors that (2501) control the depreciation items. Taxes, in the long run, are controlled by the same factors as insurance. Power operation is affected by the power required to operate the machines although the elements of heat and light are controlled largely by space and number of employees. The moving and re-arranging of departments is generally affected by special conditions.

The most important element, in the third group, is the depreciation of machinery. When comparing the use of shapers and Melling lathes for the model T shaft, the evidence indicates that the depreciation charge for shapers would have totaled nearly $34,000 as against less than $17,000 for lathes. This shows a much greater proportionate increase in the depreciation of the shapers than the corresponding increase in productive labor.

In comparing grinding and turning with the Melling lathes, the increase in depreciation would not be as great proportionately as the increase in labor, but referring to the second group, the proportionate increase in tool cost would probably be more than twice as great as the proportionate increase in labor.

It seems clear that some of the elements not affected in proportion to labor would increase in greater proportion than labor and some less, but the changes which change labor costs likewise affect all of the elements in the third group, although not always in proportion.

If the defendant had presented a reasonable distribution and complete analysis of the elements of overhead in use during the infringing period, a fair analysis of the changes in (2502) the various items might reasonably have been made. I believe that the calculations I have made

showing widely varying figures from those presented by the defendant for a few segregated elements of overhead, indicates the futility of trying to pick out a few items where records are not complete and of basing the accounting thereon. In the absence of information which would permit of a definite and clear-cut analysis of each element of overhead, the only recourse is to use that method which will come closest to indicating the change in costs, and in the present instance, this is that of including factory overhead at the ratios to productive labor shown by the defendant.

The error in such a method would be very small either way, in my judgment.

Moreover, this is the method followed by the defendant in its accounting and in its determination of profits.

Reference is made to defendant's Statement of Account, Exhibit 11. In this exhibit a portion only of the operations required to produce a cam shaft are shown, but for each operation, burden has been added to the productive labor at the departmental ratio, and the note under the tabulation reads as follows:

> "The foregoing estimate is arrived at by taking the minute cost of the same operations on Model A cam shafts (see Exhibit 7), and by applying to such minute costs the average labor rate of $.80 per hour and a burden rate of 157 per cent, such burden rate being the burden applicable to the entire department in 1925. No record exists or **(2503)** were made to show actual costs of specific operations."

In Mr. Franklin's testimony regarding operation sheet, Exhibit 16, he shows clearly that the value of process inventory and therefore the company's profit, is based upon the application of both direct labor and departmental burden to each operation which had been performed upon the shafts at the time the inventories were taken, and this applies whether one, two or more operations had been performed.

That is a definite and recognized method of determining costs and profits, and, in my judgment, is the only one which could possibly be used in the present instance, and

give the truth in the case with the slightest possible amount of error.

Q. Now, Mr. Moise, referring to the Defendant's Exhibits C and C-1, in your opinion is the depreciation charged by the defendant to the Melling and the Ford cam shapers, correctly computed? A. No.

Q. Why not? A. Well, I explained that very carefully here, and I have got some figures here, so I would have to read this, Mr. Farley.

Mr. Farley: All right, I would like the record to show the witness is reading all of this from a prepared statement, that is all.

The Master: Very well.

A. I would like the record to show, then, that I have prepared this as a necessary part of my determination of what should be used in calculating this profit.

The defendants accept the machine hour production of T-410 shafts of 25 for the shapers and 35 for the Melling lathes, **(2504)** and yet in figuring depreciation assumes that 13 shapers could have done all the work performed by the 16 faster lathes, and that but 5 shapers should have been added to offset the six Melling machines in 1929.

The one reason given in justification is that a large production of T-410 shafts was accomplished in 1923 with only 13 shapers available.

Witness Aptekar, on pages 896-7, stated that in Model T days and at Highland Park, they did not have conveyor system so much as now and checkers used to carry stock from one machine to another to get out the production for each machine. When a shortage of machines for any particular operation exists and particularly when parts are moved by checkers between operations, it is very simple to run a deficient production machine an extra number of shifts or even to build up stock during the slower months of the year. With a complete conveyor system reduction in handling costs is obtained, but uniform operation of the various machines is required to a greater extent than when checkers are used. At the time the 16 Melling lathes were ordered and installed for model T production the following shapers were available, or would have been available had not the defendant changed to lathes:

On hand January 1, 1924	13
Built by defendant, completed and given brass tag numbers and apparently placed in operation early in 1924	4
Ordered outside and approximately 60 per cent completed, in fact completed to the point (2505) which calls for a $20,000 payment in cancellation of the order	5
Total, when the 16 lathes were received	22
This corresponds fairly well with the relative 25 and 35 production on the two types of machines. If the 25 and 37½ is the proper ratio, additional machines would have had to have been ordered, numbering	2
Total available or required for Model T production	24
Additions to correspond to the 6 Mellings purchased later and used in A-6250 production	9
Total probable shaper requirements for A-6250 shafts	33

Therefore, depreciation should have been figured on the basis of 24 to 33 (or at least 22 to 31 machines) instead of 13 to 18.

As the shapers become completely depreciated through the depreciation reserves actually used by the Ford Motor Company for income tax purposes, new ones should have supplanted them at the approximate current cost. This would have greatly changed the depreciation comparison.

With regard to the use of 13 machines, Wibel, on page 537, says that 5 shapers were ordered to take care of increased production and on page 539 stated "That would have been the only reason."

In order to make the production that required from 16 to 22 Mellings, the shapers running at approximately two-thirds the Mellings' speed would have had to number from 24 to 33 (2506) and as a matter of fact there were either finished or almost completed 22 shapers when the 16 Mellings were ordered. Exhibit O (Jackson shaper correspondence) indicates that defendant had been re-

questing early delivery of shapers ordered early in 1924, or to be delivered early in 1924, I do not recall which that was.

Now, that covers that depreciation feature, as I see it.

Q. Now, have you made a computation of the depreciation on the Mellings and the shapers which you, in your opinion, say the defendant should have used on defendant's theory that depreciation must be considered separately and not as an item of overhead, and also of course on the defendant's theory that the Ford cam shapers are a proper standard of comparison of the A and F shafts? A. I have made that for the purpose of comparison. I want to say that if I was accounting for profits in this manner I would use a greater number of shapers; I would use 24 in place of 22 to compare with the 16 Mellings. Here is my computation. They are photostated and there are four copies.

Mr. Spohn: Your Honor, do you think there will be any confusion in this record if I go on and number this computation Exhibit Z-4? I have our principal account in as Exhibit Z-3.

The Master: No, I do not think so.

(The computation referred to was marked Plaintiffs' Exhibit Z-4.)

Q. (By Mr. Spohn): Now, this computation which you have just handed me, and which has been marked for identification as Exhibit X-4, consists of three pages? **(2507)** A. The first page showing the estimated depreciation had model T type of shapers been used during the infringing period; the second sheet showing the estimated depreciation of Melling lathes upon same basis, and estimated for shapers, and the third being simply a work sheet which I believe need not have been brought along, showing how depreciation accumulates from year to year upon machines purchased at any given time.

Q. And, Mr. Moise, have you an extra copy of that? A. I think I have got a rough pencil copy here.

Q. If you have your rough pencil copy, can you use that? A. Yes, I think I can find that, it is in here somewhere. Yes, I have it.

Q. Will you explain that exhibit? A. Well, this is made up in the way that accountants customarily make up a depreciation statement when it is necessary to show each machine separately, that is the first sheet. It is necessary to show each of these separately, because many of them, at depreciation rates used by the Ford Motor Company, would have had to have been replaced during the infringing period, and that infringing period was a period, up to 1929, of constantly increasing costs.

About the fifth column there are some notes, A to L, and below they refer to machines, replacing those which became fully depreciated.

Now, in 1924 the shapers cost about $6,000, almost exactly, and I have used that same figure for simplicity.

In 1929 the Melling lathes purchased cost more than 140 per cent of those purchased in 1924, was it?

(2508) Q. When the first 16 were purchased? A. Yes. And, that is not at all out of line with what I recall of the increased costs of machinery during that period of expansion. Therefore, I have used the same ratio of increased cost for shapers that had to be purchased in 1924, over the $6,000, which was their approximate price in 1924, well, in the same proportion as the increased cost of the Mellings during the same period. During the interval I have gradually increased these prices. That means that the ratio of the cost of a Melling lathe and of a shaper remains practically the same.

Q. Now, in column 1 of sheets 1 and 2, you have the shaper costs per machine set down as you have estimated them? A. On sheet 1, that is the cost of shapers as far as they were actually purchased, the rest being stated as shown, replacement machines and others.

Q. And everything to the right of column 1 represents computation of depreciation, is that right? A. The next column there at cost, the next two columns, show the depreciation, approximate depreciation which should have already been charged to these particular machines. The customary method for purchasers has been used of using half a year's depreciation rate for the year in which purchased. That is generally done, instead of trying to figure out small fractions of years.

Q. Then the other half year you picked up as the year of disposal? A. Yes; in this case running ten and a

half years it worked out a **(2509)** little peculiarly, but the principle is there.

Q. And you used the same rate that the defendant used for income tax purposes? A. I used the same rate that the defendant used for income tax purposes.

Q. Now, have you any other sheet upon which you have re-capped the figures you have set forth in Exhibit Z-4? A. I have, two sheets, six copies of that.

Mr. Spohn: Exhibit Z-5.

(The document referred to was thereupon marked Exhibit Z-5.)

Q. (By Mr. Spohn): And these two recapitulation sheets, which you have just handed to me, and which I have had marked for identification as Plaintiffs' Exhibit Z-5— A. (Interposing): Well, they have the same figures on them, the same totals on them that Z-4 has, but they divide the depreciation arrived at between the A-6250 and the T-410 shafts in exactly the same manner and upon the same percentage bases as the defendant used in dividing the depreciation they determined upon these machines during the same period. In other words, you will note that the first three periods show 100 per cent of depreciation chargeable to the T-410 shafts, and then that goes to 82.79, on down to 1.66 to the T's, during the first half of January, 1929, and thereafter 100 per cent of it is charged to the A-6250 shafts. That is exactly the same in the computation for the Ford shapers and for the Melling cam lathes.

Q. Go ahead. A. Page 2 is a calculation of the depreciation had it been possible **(2510)** to use these shapers for the F-446 shafts, and it is not on the large sheet, it simply assumes that 1½ times as many shapers as Melling lathes would have been required, and so by the same method, using the same depreciation rates, works out the depreciation which on that basis would have been properly chargeable against the shapers and against the Melling cam lathes for the production of the F-446 shafts.

Q. Now turn to the first page of Exhibit Z-5 again. I understand your computation there, the depreciation on the shapers which you say should have been used by the defendant, totals $33,912.94? A. That is the part chargeable to T-410. The total was $96,000; if you run to March

15, 1931, it should have been $96,875.98, of which $33,912.94 was chargeable to the T-410 shaft and $62,963.04 chargeable to the A-6250 shafts.

Q. Upon the Melling cam lathes? A. Upon the Melling cam lathes. The total depreciation was $43,746.76, of which $16,925.41 was chargeable to the T-410 shafts, and $26,821.35 was chargeable to the A-6250 shafts. This method of figuring depreciation is a recognized and accepted one by accountants and is, I believe, subject to the fact that I do not consider enough cam shapers have been used in the computation, correct in this case.

Q. All on the theory of defendant's accounting in this matter? A. Assuming, of course, that the Model T type of shapers could have been used to produce all shafts, which I do not recognize, and it is not up to me to determine.

Q. Now, how about your account, how did you compute depreciation? I say, in your account, Exhibit Z-3, how did you compute **(2511)** depreciation? A. The depreciation is included in the total overhead, because I included all elements of overhead, and depreciation is one of the elements of that overhead.

Q. In your judgment, does the inclusion of depreciation as an element of overhead in your account conform to the proper accounting practices? A. In this case it is the only one, and it is good in generally recognized accounting practices.

Q. Now, with respect to the defendant's accounts, Exhibits Z and Z-1, you will notice that there are included in those accounts certain charges for cost of items of maintenance and repair and overhead, overhaul separately set forth? A. Yes, they are; I have noticed that.

Q. Are those items correctly reflected and included in the defendant's account, according to your opinion? A. No, sir.

Q. Why not? A. The defendant's accounts ignore three shaper overhauls, although stating that they had been made, simply because the amounts were not available, while fourteen overhauls of the other machine were used because the cost was available; and in the final accounting, it does not seem right to have ignored the definite testimony of Mr. Schmidt, the foreman in charge of maintenance in Department 410, to the effect that each shaper was taken bodily out of the department once a year, moved

to the main tool room and completely overhauled. Such an expense would not be directly charged against Department **(2512)** 410, but would, nevertheless, be an expense applicable to the shapers, whereas all of the Melling overhauling was, upon the basis of the testimony of Mr. Schmidt and his assistant, performed by the maintenance crew in Department 410 and some men in the apparently adjoining foundry tool room. Therefore, the maintenance men would perform this overhauling service for the Mellings within the department. It would not be a net additional charge against the cost of the use of the Melling machines, but would offset or partially offset, the corresponding work in the main tool room upon the shapers.

The defendant's accounting for maintenance also accepted the fact that a total of five men were needed throughout the three shifts to care for the maintenance of the shapers when 13 shapers were used, but failed to estimate any additional number of men needed for the increased number of shapers required, or had the shapers been suitable for use upon the Model A shaft—for additional shapers required when, as presumed by defendant, the shapers would have been used for the Model A shafts, nor did it recognize the necessity for more men when more shapers were ordered for the T production. In other words, if 13 shapers required this number of men, an increase anywhere up to 33 would probably have required a correspondingly increased number of maintenance men.

There is in my judgment no reasonable evidence to the effect that Melling overhauls were in any way due to the character of the machines or that the lathes had been worn out by the production of T-410 shafts.

Nearly all of the overhauling orders specified that the machines were to be prepared for turning the cams upon the **(2513)** new A-6250 shafts. This preparation required considerable alteration in the overhead portion of the lathe, including installation of new masters for tool guidance.

It was only reasonable, at a time when a new product was to be placed in production (a product calling for much closer tolerances and better workmanship than its predecessor) and when the machines had to be partially torn down for these necessary changes, to go over them thoroughly, replacing bushings and other parts, even if but slightly worn. It would have been very strange if such a

procedure had not been followed, since new overhead cams had to be inserted anyway, for A-6250 production.

The replacement parts actually called for by the work orders were not all extensive. It seems extremely unreasonable to jump to the conclusions reflected in defendant's statement of account. Moreover, when assuming that the re-building was a proper charge against operation of the Melling lathes, it seems hardly fair to exclude the re-building costs of the cam shapers.

Mr. Farley: I would just like to call your attention at this point, if your Honor please, as to how highly argumentative this so-called testimony is.

Mr. Spohn: The witness is giving the reason here as an expert with respect to this accounting matter. As your Honor pointed out once before, an expert witness sometimes has a color of argument, but that does not destroy the effectiveness of his testimony.

The Master: I think the testimony is perfectly **(2514)** competent.

A. It is true, at the time the defendant's account was made, only three of the inventory cards bore a re-building notation, but at least a reasonable estimate of the cost of these three re-buildings should have been used as a partial offset to the overhauling of the Mellings.

Moreover, definite evidence given since the preparation of defendant's further statement of account, made clear that each shaper was rebuilt approximately once a year. This evidence, however, was entirely ignored by defendant when presenting their latest accounting, Exhibit 301.

Now, I have about twenty notes or so on maintenance. All I could find. I have considered them all fully in arriving at the conclusions I have.

Q. Now, have you made any computation yourself of the maintenance and overhaul charge on the shapers and the Melling machines which, in your opinion, should have been used by the defendant in its accounting, on its theory of the Ford cam shapers as a standard of comparison for the A and the F shafts? A. I have, and I want to say that I consider it understates the expense of the shapers, because I think that an investigation will prove they were considerably more. However, it just merely illustrates the

difference between using, as I see it, all the evidence and only part of it in preparing an account.

(A document was thereupon marked Plaintiffs' Exhibit No. Z-6.)

Q. This report which you have just handed to me, and which I have marked for identification as Plaintiffs' Exhibit Z-6, consists of four pages? **(2515)** A. Yes.

Q. Now will you explain that report, Exhibit Z-6? A. The first page has to do with the T-410 shafts. The second page with A-6250 shafts; the third page with F-446 shafts, and the fourth page is an analysis of overhaul expense which applies to all three of the shafts.

Q. What is your page 1, what did you set forth on that? A. On page 1 I have used exactly the same figures as used by defendants in their final accounting for the maintenance of 13 shapers, and also for the maintenance of the Melling cam lathes. The total of the maintenance for 13 shapers was $8,252.10, as shown by defendant, of the Melling cam lathes $14,853.80, as shown by the defendant. However, in the next to the last column I have added a proportional increase for 9 additional shapers to bring the 13 up to 22. That adds to the shapers $5,713, making a total amount of maintenance for the 22 shapers, $13,965.09.

I have also added something to the Melling cost, although there is no evidence that all of it should be added. If you will refer to note "A," which explains the figures in the second column of the Melling cam lathe portion under "foundry tool room," there were two men in foundry tool room on each of two shifts who repaired slides. The proportion of their time so occupied was not stated, nevertheless I have above included all their time, and for that reason I have added $6,601.68, which assumes, although not definitely stated, all of the expense of two men in the foundry tool room, was chargeable to these slides; that makes a total of $21,455.48, as **(2516)** maintenance costs for the Melling cam lathes for the T-410 shafts.

Now, if you will look at the notes below, all overhauling of Melling cam lathes was performed in production department and by the above maintenance crew. Therefore, overhaul expenses included in above total for Melling lathes. Each shaper was removed from the production department once a year, taken to the main tool room and com-

pletely overhauled by an entirely different set of men. The proportion of this total overhaul chargeable to T-410, is $29,000.

Now you go to page 4. Overhaul expense. Overhauling of Melling cam lathes was done by maintenance crews in Department 410. Therefore, cost of overhauling is included in maintenance cost. In the case of Ford shapers, however, each machine was removed bodily from Department 410 once each year, taken to the main tool room and completely overhauled by men not connected with Department 410. No cost of these overhauls has been supplied, but a complete overhaul of expensive machines such as the cam shapers may well have averaged $1,000. It would hardly be less than $500. If in the absence of information the average overhaul cost is estimated at $500, the following additional cost would be chargeable to the shapers, and there that calculation below shows the overhauls at the rate of one per year per machine, that would have been required for each of the three types of shafts, and the total for the 410 is $29,000. For A-6250 it is $40,000. For F-446 it is $4,250, and for all of them $73,250.

(2517) Now, the first page in recapitulation shows the shapers maintenance as above on the same page, $13,965.09, overhaul $29,000, total $42,965.09. For the Melling lathes maintenance $21,455.48, as shown earlier in the same sheet, overhaul included in maintenance, so that the total chargeable against the Mellings used for the T-410 shafts was $21,455.48.

Now, page 2 is an exactly similar thing, calculation or tabulation for the A-6250 shaft. I do not know whether it is necessary to go through with it or not.

Q. There is a recapitulation on the bottom of it? A. The figures are determined in exactly the same way as the figures for T-410. The recapitulation shows shapers maintenance, $52,410.44, taken from the corresponding figures at the top of the same sheet, overhaul $40,000, which comes from page 4, total maintenance and overhaul charged against shapers $92,410.44. For the Melling lathes maintenance $66,423.58, taken from the corresponding figure higher on the same sheet, overhaul included in maintenance, so that the total charge for maintenance of Melling lathes on A-6250 shafts is $66,423.58.

I would call attention to the note on this sheet which refers only to the A-6250 shafts, the hours worked appear excessive on this sheet. This is because a full maintenance crew is assumed out every shift. If production per shift was 2913 in April, 1930, which it was, and only 1541 per shift in September, 1928, a considerably smaller number of machines would have been required during the latter month and the whole maintenance crew would not have been required.

Q. Page 3. **(2518)** A. Page 3 has to do with the F-446 shafts.

Q. And is it computed on the same basis? A. And it is computed on the same general basis. It is a little different in there because there are no data directly for the F-446 shafts in this respect, so that it simply states if 22 shapers would have been required for T-410 shafts, and 3 for the F-446 shafts, during the same period of time, the maintenance can be estimated for F-446 as 3/22nds of that for the T shafts, or 13.64 per cent. As the production period for T shafts selected for maintenance calculations was from June 16, 1925, to May 31, 1927, 23½ months, and the production period for F-446 shafts was from June 16, 1925, to March 31, 1928, a period of 33½ months, the time for the F-446 should be increased proportionately, or by 43.55 per cent. Now, a multiplication of these two factors shows that the maintenance of the shapers for the F-446 shafts should have been .1958 times that for the T shafts, or $2,734.36, and for the Melling lathes, the same percentage of $21,455.48, or $4,200. In the recapitulation the shaper maintenance is as shown earlier, $2,734.36, with the overhaul from page 4, $4,250, a total charge for maintenance and overhaul of shapers, which theoretically are assumed to have been used on the F-446 shafts, of $6,984.36.

For the Melling lathes, maintenance, $4,200.98, that including the overhaul.

Q. Now, your report in Exhibit Z-3, how did you make allowance, if any, for overhaul and maintenance? A. Through the inclusion of maintenance as an element of the **(2518½)** overhead.

Q. Well, in your opinion does your method of treating maintenance and overhaul conform to the best accounting practice? A. I think so.

(2519) Q. Now, referring again to the defendant's accounts, Exhibit C and Exhibit C-1, do those accounts take into consideration the amount of tool cost on the shapers and the Melling machines? A. They do not. I think that is another thing which seems to me incorrect in the defendant's accounts, the bringing in of the apparently—

Mr. Farley (Interposing): You are still reading from your prepared statement?

A. This is just a note here, yes, although I could say this without it. (Continuing): —the bringing in of the apparently heavier grinding cost for tools used upon the Melling lathes and so stating that apparently these tools cost more, while ignoring the fairly definite record in the original statement of accounting regarding the much heavier original cost of shaper tools as compared with the Melling lathes, can hardly present a fair comparison—or, the Melling lathe tool, can hardly present a fair comparison in this case.

Q. Have you made a computation of tool cost, assuming that it should be considered separately as an item, and not as a part of overhead? A. Yes. Here are six copies.

Mr. Spohn: Will you mark that, please?

(The document above-referred to was thereupon marked Plaintiff's Exhibit Z-7 by the reporter.)

Q. This report you just handed to me, and which I have marked for identification as Exhibit Z-7 has two pages to it? A. Yes.

Q. Now, will you explain that computation? (2520) A. I think it would be well to go to the second page first, because the first page is a calculation from it. The Ford cam shapers, Exhibit 9(g), of defendant's statement of account, gives tool cost per T-410 cam shaft, based on a record for '22 and '23 as .00270.

As to grinding cost, page 1765 of typewritten record of hearing, beginning January 16, 1939, states that grinding 12 tools requires 15 man minutes.

I might say—it is not on this statement—that there was a little variation on that, but that was the average; the figures I have used as of the time required. 15 minutes at 90 cents per hour comes to 22½ cents.

The cost of grinding eight tools would be ⅔ of that, or 15 cents.

Now, assuming 500 shafts per set of eight tools, the grinding cost of tools per each T-410 shaft would be 15 cents divided by 500, or .00030. That gives a total cost for tool purchase, replacement and grinding, of .00300; tool cost per T-410 shaft—that is, the total tool cost.

Had it been possible to use the T-410 shaper for the large bearing shafts, the cost would probably have been proportionate to area of cams, and that produces for A-6250 a tool cost per shaft of .00344, and for F-446, .00556.

For the Melling lathes; the cost of eight tools, per Exhibit 8(h) of defendant's statement of account was $2.00. The hours of life per the same exhibit, 200. Production per machine hour on the T-410 shaft, 37½.

T-410 cam shafts per tool life, 37½ times 200, or 7500. Cost per T-410 cam shaft, $2, divided by 7500, or .00027.

(2521) Grinding cost, page 1765 of typewritten record of hearing beginning January 16, 1939, states grinding 12 tools requires 30 man minutes. 30 minutes at 90 cents per hour, 45 cents. Grinding cost of 8 tools, two-thirds of 45 or 30 cents. Assuming 500 shafts per set of 8 tools, grinding cost of tool for each T-410 shaft, 30 divided by 500, or .00060. Total cost per T-410 shaft, .00087.

The same method of calculation as used above gives a cost for the A-6250 shaft of .00100, and for the F-446 shaft, .00161.

Now, the first sheet simply takes a production as used in this report, this Exhibit Z-3, of each of the types of shafts, and multiplies it by the respective total tool cost per shaft, bringing a charge for the Ford shapers, a tool charge for the Ford shapers, for all types, of $26,320.31; for the Melling cam lathe, of $7,642.36.

Q. Now, in your account, Exhibit Z-3, did you make any allowance for tool maintenance and cost? A. I did, by inclusion in the total.

Q. Total what? A. The total overhead. Inclusion of the total overhead because tool cost is an element of overhead.

Q. Now, in your opinion, does your method of handling tool cost and maintenance by inclusion in overhead compare to the best accounting practice? A. It does.

Mr. Spohn: Now, if your Honor please, I would like to offer in evidence Exhibits Z-4, Z-5, Z-6 and Z-7, as illustrative of the accounting for depreciation, overhaul and **(2522)** expense, and tool cost on defendant's theory of accounting; that is, on their own theory that those should have been the costs that they should have used. Of course, as we point out in our accounting, we have used general overhead to cover those particular elements.

The Master: I will admit these exhibits.

Mr. Farley: Of course, I want to make the objection, that subject to further facts that I will bring out on cross examination as to the accuracy of them.

Mr. Spohn: And, if your Honor please, I offered Exhibit Z-3 this morning. I understand your ruling was you allowed it.

The Master: Yes.

Mr. Spohn: Yes. May we have five minutes?

The Master: Are you through with your examination?

* * * * *

RE-CROSS EXAMINATION by Mr. Farley.

* * * * *

(2524) Q. Now, referring to page 4 of your account, Exhibit Z-3—first, referring to page 3, you get a total savings on productive labor, you get a figure of $387,305.84, is that right? A. That is correct.

Q. Whereas, on page 4, you get a total of $508,488.11 as a burden savings, do you not? A. That is true.

Q. And, that five hundred thousand dollars, as compared with the three hundred and eighty-seven thousand amounts to an increase of approximately 130 per cent, isn't that about right? Mr. Woehrle just figured it out. A. Approximately that.

Q. Now, your testimony was that the inclusion of the full burden rate to establish savings was in accordance with the best accounting practice. If you were put on a job as an accountant for the purpose of determining profits made by the sale by the Ford Motor Company of any particular part, then you would take the actual cost of the part as shown by productive labor, and you would add to it, of

course, the percentage burden to get the cost of that part to the producer, and anything over and above that which they would realize as the sale, of course, would give you profits? A. Pardon me, I did not say that necessarily that method was the **(2525)** best of all accounting practices. I said it was a generally recognized and accepted accounting practice, and that in the absence of a complete breakdown of all elements of overhead which could reasonably be divided and shown against one kind of operation or another, it was the best possible and most accurate method that could be used.

Q. Well, now, when you say that is accepted accounting practice, of course, it would be accepted accounting practice for a situation such as I outlined where you were going to get the cost and the profits that might be made by sales. It would be accepted accounting practice for that sort of situation. I didn't make any particular note, but I am just wondering if you would be good enough to give me—as I recall it you separated the items of burden into three particular groups. I wonder if you would read those off again. A. I would be very glad to. The first group, "Administrative Salaries." I think you have a list of those. You can check those first, second and third, if you want.

Q. Yes? A. Mark the "Administrative Salaries" in the first group. That is one. Then, depreciation of land improvements; depreciation of freight car equipment.

Q. They are all in one? A. All in one, yes; all of these I am reading can be marked one.

The Master: Do you have some particular heading for that group?

A. That is the group which would not be affected, probably, by these machines, the group one. Have you that freight car equipment?

(2526) Mr. Farley: Yes. Locomotive equipment.

A. (Continuing): Experimental engineering and designing; final inspection; repairs to land improvements; repairs to freight car equipment; repairs to locomotive equipment.

That is the group which probably would not be affected by this fact—at least, not affected by the amount of labor.

Q. (By Mr. Farley, continuing): How about repairs to power equipment? Which group do you put that in? A. Pardon me?

Q. Go ahead. A. The second group: Factory supervision; miscellaneous manufacturing expense; expense tools; insurance—employees liability and compensation; sweeping and cleaning; miscellaneous service for employees; timekeeping, payroll and factory clerical salaries; power operation—heat, light and power (in part).

I might say heat and light largely.

Q. Only part of that power operation? A. Well, that covers heat, light and power. Heat and light would be largely controlled by the number of people; at least, it would be a large element.

The third group: Depreciation of buildings; depreciation of machinery; depreciation of durable tools; depreciation of factory and miscellaneous equipment; depreciation of power equipment; insurance—that, of course, being property insurance.

Moving and rearranging department; power operation —heat, light and power.

Q. I see. A. That is in part, again. That goes part in one, and part in the **(2527)** other class.

Repairs to buildings; repairs to machinery; repairs to durable tools; repairs to factory and miscellaneous equipment; repairs to power equipment; taxes—State, City, County.

I believe that will cover all of those except the Social Security Taxes, which naturally is not pertinent to the period of infringement.

Q. Now, as I understood your testimony it is that the items of burden under one are not properly allocated to any change in the machinery; is that the idea? A. Not to any considerable extent; no.

Q. And, what was your testimony about the ones you put in the second group? A. The second group will, over a long period of time, change almost in proportion, almost directly in proportion to the number of employees.

Q. I see. How about the third group? A. The third group is affected by several elements; one of them being number of machines; another being number of employees, another being cost of machinery, space occupied, electric current used, and maybe a few more elements might affect them slightly.

Q. Now, I understand your testimony was that you didn't have any break-down of these particular items. You took the entire burden and just added it entirely to your so-called savings? A. I did, stating that some of the elements which would not change directly would change more rapidly and some less rapidly.

(2528) Q. Now, if the break-down were furnished to you of these items, and how they were ascribed to the departmental overhead, would you then not say that your total overhead, as you have figured it out, should be modified accordingly?

Mr. Spohn: Just a minute, do I understand that is available?

Mr. Farley: Yes.

Mr. Spohn: It has been requested heretofore, hasn't it?

Mr. Farley: I don't know that it has; I don't think it has.

Mr. Spohn: Sure it has.

The Witness: It was definitely stated by Mr. Hovis it was not available.

Mr. Spohn: Why, yes, time after time that has been requested.

Mr. Farley: I don't know. I don't recall that it has.

Mr. Woehrle: We have present-day records.

Mr. Spohn: I know you have present-day records, but the data we required was covering the infringing period, the break-down. Do we have that notice to produce? I understood Mr. Hovis stated a break-down was not available for any of those years.

The Master: Do you understand you have present day break-downs?

Mr. Woehrle: Oh, yes, of course. I don't know how far back it goes.

Mr. Spohn: The fact is, Mr. Woehrle, there is no break-down for any of the years covered by this accounting period.

(2529) Mr. Woehrle: That is right.

The Witness: There is another element covered in that overhead.

The Master: Just a moment.

Mr. Farley: Just a moment. I just glanced over the notice to produce that you referred to, Mr. Spohn, and I don't find any notice going to that proposition of break-down of overhead cost.

Mr. Spohn: I understand not, because Mr. Hovis' testimony was, on cross examination, that the details were not available on the break-down; definitely so.

Mr. Farley: Well, in any event I think I am entitled to an answer to that question, if your Honor please.

Mr. Spohn: I have no doubt counsel is entitled to the answer, but if the data isn't available, I don't see what good the answer does.

The Master: Well, I will hear the answer and question, anyway.

(Question read by the reporter.)

A. If it will be modified, decreased, I don't know. It might modify it somewhat, which way I have no means of knowing; but, it would modify it, in my judgment, very slightly.

Q. Well, certainly, if by your own testimony all of the items included in your group 1 are not properly ascribed to any change in an operation forming a part of the department, the addition of those items of burden tend to increase the figures rather than decrease, wouldn't they? A. In the first place, that is true to this extent, that they would not change in proportion to labor. They would change very little, probably, but they are, generally speaking, completely **(2530)** within my experience a very small proportional part of total factory overhead; and, moreover, the overhead rates which we have used almost certainly, in my judgment, are less than the total overhead for the Ford Motor Company, because in most years the smaller months which always increase an annual overhead are omitted from the cost summary cards, and, therefore, our rates are lower, in all probability, than the total cost of producing these shafts by the Ford Motor Company over the entire period.

Q. Now, what has been your experience with respect to this matter of overhead in large plants such as the Ford Motor Company? Wouldn't you say that those figures would run substantially the same from one year to an-

other, or would they vary very much, or do you know anything about that? A. I know of no company which carries its overhead very closely to the same manner that they did as long ago as that. There would have been very material changes in practically every company that I have had the experience with; partially due to the tax laws, necessity for more accurate accounting, and partially due to education in the value of costs.

Q. Of course, the ones you group under Group 2, as I understood your testimony, those would vary or might vary in accordance with the number of employees on any particular operation? A. They would vary over a long period of time almost in direct proportion, in my experience.

Q. And, with respect to your grouping of 3, any variation there would depend upon the fact that—largely upon the fact that the number of machines used for the standard of comparison would require a great deal more space than, let us say, the Landis **(2531)** grinders as compared with the Melling machines? A. Yes. They would require a great deal more space than the Melling machines. But, space is not the only factor, of course. It is only one of a number. It isn't even the principal factor.

Q. Now, you have taken your Group 2 which would, as I understand your testimony, in your opinion, depend upon the larger number of employees. Assuming there were a very much larger number of employees, the overhead items in Group 2 would probably be increased. That is, the burden would increase if, as you stated, there would be three or four times as many employees for the use of Landis grinders? A. That is true, because generally those over a period follow almost in proportion to direct labor.

Q. In checking against this list I find that there are eight of those items of overhead which you would say would probably have to be—result in an increase in the burden if some 70 additional employees might have been used on the production of model A shafts; that is, if the Ford Motor Company had used Landis grinders for the production of A shafts, some of the eight items of the entire list of items which go to make up the overhead might have been increased in so far as the burden figures are concerned? A. That is something like 200 employees; approximately 70 on a shift. And, these are eight items

which I picked out that would generally be increased in proportion. But, the number of overhead items means very little. The amount that they represent, the dollars they represent, is the important factor. You frequently find two or three items of overhead **(2532)** include more than 50 per cent of the total overhead in the factory. The ones in the first group, with possibly one exception, would be in my experience quite small.

Q. Which of the ones would you pick out as the ones of two or three items which would be the larger ones? A. In the second group, generally speaking, the factory supervision is the largest single element of overhead in most plants.

Q. And, I think the list here as given by Mr. Woehrle of the items which go to make up burden include some thirty-one items? A. Of which thirty might be applicable, because one is Social Security taxes.

Q. But, in your burden figure of $508,488.11, as contained on page 4 of your report, all of those are included in that burden. That is so, isn't it? A. They are. We have presented some figures showing how some of the others would increase that are not in direct proportion, and some of those are much greater than the proportional increase in labor. For example, in that second group—

Mr. Spohn (Interposing): Just a moment.

The Master: Wait a minute.

Mr. Spohn: Mr. Moise, just a moment, counsel is talking.

The Witness: I beg your pardon.

Mr. Farley: I am sorry. You may continue now, Mr. Moise.

The Master: Now, you can state the example.

A. For instance, in this second group which, I said, generally speaking, pretty well follow the amount of labor, probably the grinding tools would be included in expense tools, the grinding **(2533)** and the other. From evidence given I have calculated that for the A-6250 shaft, tools and grinders, grinding wheels, it cost something like 15 times as much as for the Melling lathes including the grinding upon the latter, which is well over twice the increase in labor. There is an element which increases more than twice as fast as labor, according to my calculation.

Q. That is based on the assumption, of course, that the Ford Company, when they started model A production, that the only other recourse they would have had would be to go to Landis grinders? A. This is all based upon the standards of comparison, which I have stated were the Landis grinders.

Q. Of course, if the standard of comparison is that of a machine or machines which we will assume would involve no substantial increase in the space occupied by the machine, then none of the No. 2 items would apply, isn't that true? A. Oh, yes.

Q. Or, No. 3 items, I mean? A. Oh, yes, they would. For instance, depreciation would be more, and more expensive machines, much more. We have shown that.

Q. Of course, machinery depreciation? A. That is probably the biggest item in that third group.

Q. Yes. And, in so far as the comparison which confronts the Court here is concerned, if the items of depreciation of machinery and expense of tools, tool expense, and maintenance cost are established, they are the most important contributing factors in so far as the average of burden is concerned, isn't that true? **(2534)** A. No, I wouldn't say so. Of all the elements of burden?

The Master: Are you speaking of all the elements or restricting yourself to the third group?

Mr. Farley: I am speaking of the third group, yes; I am speaking of the third group.

The Witness: I do not know what are meant by durable tools, and expense tools. They might be mixed up. The charge for tools is widely variant in different factories, but probably the machinery item would be the biggest single item in that group.

Q. Repair of machinery and depreciation of machinery? A. Yes. Yes, that would be true.

Q. I think, if my memory serves me right, Mr. Hovis testified durable tools were such things as presses, and things of that kind, which last almost indefinitely? A. Yes.

Q. And, of course, any repair to those tools naturally wouldn't have anything to do with the repairs to the type of machines that are used for this cam shaft operation? A. If those things are excusable items which have noth-

ing to do with these machines, but I don't know. Probably then the tools of this might be charged to the expense tools on the second group.

Q. And, it wouldn't be your considered opinion, would it, that there would be any difference in the cost of locomotive and freight car equipment, and locomotive and freight car repairs, because of a change of an operation from one machine to another in the plant? A. Oh, no. I can't see where there would be any change in the **(2535)** depreciation of freight car equipment or locomotive equipment.

Q. Nevertheless, those figures are included in your figure of $500,000, are they not? A. Yes, but they are insignificant, in my experience.

Q. And, the same thing would be true, would it not, with respect to the administrative salaries? A. Yes, which could not, probably, amount to 1 percent of the total.

Q. That fact is true with all your items of group 1? A. Yes. They are segregated for that purpose, because they would not be materially affected, in my judgment.

Q. It is quite clear from your statement of account there has been no attempt made for any segregation of those items? A. It hasn't been possible.

* * * * *

(2544) Q. And, if the straightening operation is included as an element of cost on the Melling machines, referring to your Table 3—on page 3, rather, and the first table there, of course, it would convert those figures of savings into a loss? A. I believe it would.

Q. As we testified before with respect to Exhibits Z-1 and Z-2? A. Yes. Those are not materially changed.

Mr. Spohn: Mr. Farley, may I have a question of Mr. Woehrle right now along this line?

Mr. Woehrle, were the production figures of June, 1925, pro rated?

Mr. Woehrle: Yes.

Mr. Spohn: They were pro rated June 15 to the half of the month total, isn't that right?

Mr. Woehrle: That is right.

Mr. Farley: That was because of the fact you didn't have a Form 2202-B available at that time?

Mr. Woehrle: Yes.

Q. (By Mr. Farley, continuing): And, of course, the modification of those figures would also modify the—of course, it is quite obviously true that if the productive labor figures show a loss rather than a profit, the taking of the full burden rate would very materially increase that loss rather than decrease it? A. Oh, yes. It increases the loss, or increases the profit.

Q. Well, now, referring to Exhibit Z-4, Mr. Moise, in the third column—do you have a copy of that, your Honor?

The Master: Yes.

(2545) Mr. Spohn: It is the long one, your Honor.

The Master: Yes.

Q. (By Mr. Farley): Referring to the third vertical column under the heading "Depreciation to 6/15/25." A. Yes.

Q. (Continuing): —"Per cent," I would like to ask there, Mr. Moise, what annual figure of depreciation did you use to get these figures of 94.72, 85.10, 75.60, and so forth? A. If you will refer to the footnote on the bottom of this exhibit, it reads: "In order to determine when shapers would have become fully depreciated and presumably replaced at current costs, it is assumed that they had been depreciated at 9½ per cent, and therefore had an effective life of about 10½ years."

That, Mr. Woehrle testified for several years back of this—I don't recall just how far—they had used this 9½ per cent rate. I think it was back—well, I can't recall. I think from 1920. That is just memory.

Q. I see. You are taking the same figures used by Mr. Woehrle in computing depreciation during the years of the accounting period? A. For each individual machine I have used the same rates he had.

Q. If the rate in the years prior to 1920 had been 12½ percent rather than 9½ percent, the depreciation as figured by you during these years up to 1924 should be modified accordingly, should they not? A. Slightly modified. I think 'way back before the Tax Examiners changed their depreciation rate, I think Mr. Hovis said that they used 12½, but Mr. Woehrle stated, I believe, (2546) during the greater part of the life of these shapers, at least, that they had used the 9½ rate, which is about 10½ years, and Mr. Woehrle stated that he had, I believe he stated, in fig-

uring his depreciation, he had given these shapers a life of 10½ years in his accounting procedure. This is an effort to follow as closely as possible the method used by defendant modifying, of course, by the number of machines and the cost of later machines.

Q. Now, as I understand your depreciation figures, you have added some 9 machines, 9 shapers, to the 13; isn't that correct? A. I have added 9 shapers at the time they bought 6 Mellings, on the basis of about 50 percent more production on the Melling than on the other, so that if it required 6, you would have added 9—to replace 9 shapers instead of 6 Mellings.

Q. I don't know whether I understand your figures or not, Mr. Moise. You have recapitulated, as I understand it, your depreciation cost on your Exhibit Z-5? A. Yes, sir, and split it between the T-410 shaft and the A-6250 shaft in the same percentages that Mr. Woehrle used in putting the depreciation for those periods. I just used his without checking them. I think he based them on the number of shafts of different kinds produced within a year, and I used exactly his percentages without checking them.

Q. Now, do I understand that on your depreciation cost on cam shaft shapers you used a total of 21 shapers on this first column of— A. (Interrupting): You will find at the bottom of the column on **(2547)** this each one shows the number used each year; 22 in the last half of 1925; 22 in 1927; 22 in 1928; 31 and 30 in 1929, because in the course of 1929 one of these machines was sold and, therefore, I took out a shaper. 30 in 1930, and 30 in 1931. I have recognized the sale of a Melling machine, and deducted a cam shaft machine. I couldn't deduct two.

Mr. Spohn: Or 1½.

A. I could have deducted 1½.

Q. (By Mr. Farley, continuing): Did you take into consideration the fact that in the years 1923 and 1924, which years were practically 2 million production years of the Ford Motor Company, 1923 I recall was just under 2 million, and 1924 just over, or vice versa.

Mr. Spohn: Vice versa.

A. I think you will find 1923 is nearer the 2 million. 1922 is not so high.

Q. 1923 and 1924 I am speaking of. 1923 was just over 2 million, and 1922 was just under 2 million. Did you take into consideration that during all of that period of time 13 shapers turned out the entire output? A. During 1924?

Q. 1923 and 1924. A. When were these shapers purchased?

Mr. Spohn: Mellings?

Q. (By Mr. Farley, continuing): Let us eliminate the year 1924. Let us say, did you take into consideration, then, the fact in the year 1923 the 13 shapers available turned out the entire production on model T shafts of over 2 million? **(2548)** A. I did. You will notice it was back in 1923 Mr. Weibel made this schedule for ordering, made this first schedule for release to Melling machines; that Exhibit we were talking about—I forget the number, but, about the middle of 1923; and, that gave the relative speeds of the two.

Q. But, by that time the bulk of the shapers, or several of the shapers—at least 4 or 5 of them—had been fully depreciated, had they not? A. No. None of them except —not one of them had been fully depreciated at that time, not until the latter part of 1925, the first one, I believe the latter part. 7089, the first one, had been scrapped before that, in 1921; and, the next one was not fully depreciated until the close of 1925 or early in 1926; the next three a year later, and the next six, I think, a year later, and so on. The dates are given on there. If you will notice on the 4th column of my report, I say: "Year fully depreciated close of."

Q. Yes, I see that. A. And, if lower rates were used, then they would have had still longer to run.

Q. You said if lower rates were used. As a matter of fact, higher rates were used in those years, were they not? A. No; 12½ years.

Q. 12½ percent? A. What life did they use?

Q. Eight years prior; 12½ percent. A. That is right. The department cut them down. You will note, however, all these machines were operating in 1924 when they bought the Mellings; according to Mr. Smith up to the close **(2549)** of 1924, and maybe early in 1925.

Q. Now, referring to your Exhibit Z-6. A. Which one is that? Mine are not numbered.

Mr. Spohn: Maintenance.

The Witness: Maintenance; O.K.

Q. (By Mr. Farley, continuing): Now, as I understand your calculation of maintenance, you state in your second note on page 1 of that, "All overhauling of Melling cam lathes was performed in production department and by the above maintenance crew. Therefore, overhaul expense is included in above total for Melling lathes."

Mr. Woehrle included in his cost of maintenance a number of extraordinary repairs that were shown by various work sheets. You understood that? A. Yes, I understood that.

Q. And, did you take into account a set of work sheets that we turned over to you, or, rather, turned over to the plaintiffs, and some of which were introduced in evidence as P-1 to P-14? The first one of them, P-1, is an order to move Melling cam lathe, and it gives the brass tag number, from K-7 building to B-58 foundry. Doesn't that indicate clearly that that repair work was done at some other place rather than by the same maintenance crew, as in the department?

Mr. Spohn: If you know.

A. I think Mr. Schmidt stated he had two men in the foundry tool room that worked on these slides. That was not the main tool room. Where the foundry tool room is, or the foundry, I do not know. I have allowed two full men, although I do not know whether they worked on that all the time in the foundry **(2550)** tool room. It was a very large charge during this period.

Q. You haven't consulted those work orders— A. (Interrupting): I have seen them.

Q. (Continuing): To see the type of work that was done, have you? A. Some of them I have been over.

Q. Well, referring to the orders under P-1, they state, the first one, make 1 cast-iron casting as per sample; and, the next one, make 8 bronze split bushings as per sketch; next one, make 4 bronze bushings as per sketch; next one, furnish 2 castings as per above number; next is make 7 bronze bushings as per sketch; next is make 8 bronze bushings as per sketch; and, then, it gives the total cost of those items $1306.78, and some more sums added. Those

work orders clearly indicate there was not work on the slides, do they not? A. I do not know whether that covers all the work that was done on them at the time. I do not know whether they covered overhead or not, which I have included otherwise. And, I do not know—there is nothing in there to show the cause. That is just about the time they were getting A-6250 into production.

Q. Now, the last sheet of these, Mr. Moise, in the summary, a designation of labor OH; wouldn't that indicate to you overhead was included? A. That is true. I noticed that. I said I did not know whether that was in there or not.

Q. You heard the testimony of Mr. Schmidt, did you not, to the effect that all this work done in his department was done on a standing order? A. Yes, sir. No, that was Mr. Aptekar, I think. I don't think Mr. Schmidt said that.

(2551) Q. Mr. Schmidt also testified to that effect, if I am not mistaken; whereas, these orders, don't they indicate to you, as an accountant, they were a special order for a special overhead job? A. I do not know, Mr. Farley, and I do not know whether most of those things—the reason for those was preparing them for the A-6250 shaft. It was perfectly natural to go over a machine when you are going into a precision job, where you weren't doing a precision job before; it is perfectly logical and good shop practice; and in that, you will notice those repairs which are not so extensive, and you will notice on guessing at the cost of completely rebuilding or overhauling a Ford shaper I have taken the sum of $500, which in my experience wouldn't go very far. I contend that there isn't any possible way with the information—

Q. (Interposing): Please, Mr. Moise. A. All right.

Q. If I might make the observation, I don't think you are properly here to make contentions. A. Possibly not, Mr. Farley, in this case, at least; not at that moment.

Q. Now, I would just like you to glance over these and refer to the dates of these overhauls. P-1 shows a date of 6/28/29; P-2, a date in 1928; P-3, also 1929; P-4, 1929; P-5, 1928; P-6, 10/15/29; P-7, 1/27/30; P-8, 10/18/28; P-9, 5/14/29; P-10, 12/14/28, and the orders attached to it running into 1929; P-11, 4/28/28; P-12, 5/23/30; P-13, 1/22/29; and, P-14, 11/16/28. My understanding is that you have not included the cost of any of these overhauls at **(2552)** all

in your sheet or Exhibit Z-6? A. No, I haven't included them in his comparison of maintenance and overhaul. I might say I have no data which I consider would make a completely satisfactory comparison of maintenance and overhaul cost for these two shafts, because there is nothing in the record which shows what the overhauls on shapers cost. And, it is out of the question to use a figure known on one side and ignore a figure which must be a considerable item on the other. It just means your comparison is perfectly absurd, in my judgment, and I wouldn't submit this as a part of our account.

The Master: Did you say you took into consideration overhead in this computation of maintenance?

A. No, I just took the—

The Master: Direct labor.

Mr. Spohn: You mean on Exhibit Z-6, your Honor?

The Master: Yes.

A. I just took the figures they had there; that is, just direct labor in the maintenance. It is just a flat figure of $500 for a minimum estimate of overhaul for the shapers; just thrown in there to show even with a minimum figure you would have added an item that certainly was big enough to be considered in a comparison. I don't think any comparison of this can be made. This is not intended as an accounting sheet, by me, for the purpose of obtaining a profit. I think under the circumstances it is impossible to make one.

The Master: Is your $500 overhaul estimate per shaper a rough estimate of the direct labor cost?

A. It is simply a very minimum cost of labor and material required **(2553)** to make any considerable overhauls. Mr. Schmidt testified about the things they did on there, and I believe he was interrupted before he got through, but I think he said they took the machine right down to the casting, changed bearings and shafts, and then someone interrupted him, and he didn't complete it. And, when these overhauls of the Melling lathes, of which they have the 21 sheets, if they cost $1665.00 apiece, and consist, to a large extent, of changing bushings, and so on, the $500 is simply an absolute minimum figure thrown in there to show something should have been included.

The Master: You are considering the cost of materials, then, with the maintenance and overhaul work on the shapers, but not with the Melling machines?

A. I am not including a cost of material, because I say—it might be cost of material—$500 I don't think would cover cost of labor. I used a minimum figure without reference to what it included. If you will notice, the labor on these is considerably more than that.

Q. The point is that you haven't included any figure of overhaul on the Melling lathes on the first page of your Z-6, except that you ascribe, according to the testimony of Mr. Schmidt, that all the overhauling was done by the maintenance crew in spite of the fact documentary evidence has shown, produced here, showing the overhaul was done on different orders than those testified to by Mr. Schmidt; isn't that true? A. I have allowed the full time of two men in the foundry tool room, probably connected with the foundry building which, in the two, amounts to $27,000. Now, Mr. Schmidt didn't say **(2554)** they were working on slides all the time. He said those men repaired slides. I would go a long way before I would attempt to claim this sheet, or the other, represents a fair comparison of overhaul and maintenance. I don't think it does. I don't think either one of them do. I wouldn't know how to get it from evidence presented.

Q. I refer you to sheet 6 of schedule 1. I think that forms a part of Exhibit C. Is that correct, Mr. Woehrle?

Mr. Woehrle: That is right.

Q. (By Mr. Farley, continuing): And, it shows a total of these extraordinary overhauls covered by these work orders that are listed there? A. Yes.

Q. Of some $23,579.00? A. That is true. That is not as much as I have added to Mr. Woehrle's account for the Melling.

Q. But, the figure you have added, you have added some $6,000 for the foundry tool room, then? A. No, I have added $27,000 for the foundry tool room, if you will look at the second sheet, also, and—in other words, while I don't consider the figures accurate, I don't think we have anything to go on. My charge against the lathes is about the same as Mr. Woehrle's, including the overhaul.

Q. But, if you included the sum as given on these work orders as additional to the day to day work of the men on the slides as testified to by Mr. Schmidt, your complete maintenance cost, then, on the Melling machines, would be larger than the $92,000 you have given on page 2 of your Exhibit Z-6. That is correct, isn't it?

(2555) The Master: You mean the $66,000?

Mr. Farley: No, if you added the 22.

A. Then, you would get about $98,000 or $88,000. That $88,000 you would add to that, if you included those things, and your comparison would be a little different provided you retained a minimum $500 for overhauls on the shapers when you were putting in $1665.00 overhaul on Melling lathes. Again I say I think the figures in here are unreasonable because they are not accurate, on either report.

Q. It would be practically 90,000 and not 88,000, if you added that full amount? A. I will take your word for it, Mr. Farley. Mr. Farley, may I say one thing in connection with this?

It must be recognized that had they been using shapers at about the time they got into big production on the A shafts, it is entirely possible they would have corresponding very special overhauls on them. Nobody knows. There isn't anything to indicate. Those machines happened to be there at the time to shift to another shaft.

Mr. Farley: No, I think that is volunteered, your Honor, please, and I believe it should be stricken.

The Witness: It is perfectly logical.

The Master: I think it is in line with the general subject that we are on, and I will let it stand. It simply means the plaintiffs have asked the question on re-direct examination, if it were stricken out.

Q. (By Mr. Farley): Well, I believe you testified on your direct examination here, Mr. Moise, that, if I understood you right,—you will correct me, I know, if I am wrong —that these overhauls (2556) were done because of the change from the model T to model A shafts? A. Oh, I did not say positively. I do not know why they were done. I say they may have been done for that reason. I said there was no conclusive evidence that they were done because they were worn out producing model T shafts.

Q. But, those overhauls were made, as those cards show, anywhere from a year and a half to two years after the machines had been used extensively on model A production? A. Some time after the production had started on that. But, if you will recall that there was quite a good deal of trouble changing slides, and so forth, and, therefore, there was a good deal of delay in getting—some delay in getting into production on the A shaft, I believe, some of the witnesses testified. That is, in the period, the early production of the A shaft, and before they got into really big production, most of that work was done; the really big production.

* * * * *

(2565) Q. Now, would you refer to your Exhibit Z-4, please?

Mr. Spohn: That is that depreciation.

Q. (By Mr. Farley, continuing): Now, as I understand this, Mr. Moise,—do you have a copy there, your Honor?

The Master: Yes, I have.

Q. (By Mr. Farley, continuing): On the first page in the year 1929 you jump the number of shapers from 22 to 31, and, also, as I understand your calculations here that is based on the assumption that nine shapers would be the equivalent of six Melling machines? A. That is so stated on the report. You will notice it says corresponding to six additional Melling machines. Thereafter there are listed nine shapers.

Q. Now, you heard the testimony, did you not, to the effect that the six additional Melling machines bought in 1929 were bought for the purpose of putting in a third operation? A. I heard that testimony, and also that they were used in production.

Q. Now, as I understand your method of figuring depreciation it is on the basis of the number of hours run by the machines, isn't that your system here? A. No, sir, it is on the number of machines on hand depreciating so much per year. We have no records as to the hours run by different machines; none whatever.

Q. Well, as a matter of fact, as I understand your calculation, when you compare output of 25 shafts per hour

on shapers to **(2566)** 37½ on Melling machines, in order to obtain an additional number of machines, doesn't that really boil down to figuring the machines on the number of hours they would run? A. It means that to produce a given production safely you would have to have more slower machines than you would fast machines.

Q. But, your calculation does not take into consideration the fact as shown by the Payne reports that the Walcott machines were found to be 40 per cent, or, rather, 60 per cent efficient, does it not? A. I have read the Payne report, but the Payne report was made during the period when the machines were being gone over as testified to by Mr. Schmidt.

Q. Will you please answer the question? Your calculation does not take that into account.

Mr. Spohn: If your Honor please, the witness answered the question.

Mr. Farley: Well, read the question and answer, please. I don't think I got an answer to that question.

The Master: Does your calculation take that into account?

A. You mean do I consider the speed indicated and the percentage of the time operated as shown by the Payne report? Because, I did not, for the reason stated.

Q. (By Mr. Farley, continuing): And, as your Exhibit Z-5 is merely a recapitulation of the calculations made on Exhibit Z-4, the answer would be the same there that you did not consider the Payne report or the relative efficiency or down times of the two machines? A. I did not consider the Payne report in that respect at all.

* * * * *

(2567) Re-Direct Examination by Mr. Spohn.

Q. When you testified in response to a question of counsel that you didn't consider the Payne reports, you testified yesterday concerning those Payne reports, did you not? A. I beg your pardon?

(2568) Q. I say, you testified yesterday concerning the Payne reports and the reasons why you didn't use them in your accounting? A. I think I did; yes.

Q. And, when you said you did not consider them, did you mean to say you didn't use them? A. I did not use them. I gave consideration to everything.

* * * * *

Q. Now, referring again to your Exhibit Z-6, that is the exhibit on maintenance and overhaul? A. I have it.

Q. Do your figures there set forth any overhead figures at all? A. In so far as the principal calculations are concerned, the figures I used, they do not consider overhead.

Q. Direct labor only? A. Direct labor only.

* * * * *

APPENDIX
TO TRANSCRIPT OF RECORD.

Designated Portion of the Testimony of the Witnesses Otto H. Schultz, Frank Steinke, Bert Weisel, William Cunningham and Charles Gordon from Plaintiff's Exhibit 14—Patent Office Record, Interference No. 47,200—Herman W. Melling vs. Charles Gordon and Alfred Redlin.

OTTO H. SCHULTZ:—

(Q. 1, page 132, to and including Q. 22 and Answer, page 136.)

DIRECT EXAMINATION by Mr. Earl.

Q. 1. What is your age, residence and occupation? A. I am 38 years old, reside in Jackson, Michigan, 314 South Bowen Street; manager Jackson Motor Shaft Company.

Q. 2. How long have you been connected with the Jackson Motor Shaft Co. and in what capacities? A. Connected with them about seven years and a half, five years and a half as superintendent, the other two years as manager.

Q. 3. How long have you known Mr. Melling? A. About four years, I think.

Q. 4. Do you know Mr. Gordon? A. Yes, I know Mr. Gordon.

Q. 5. You have known him how long? A. About two and a half years, I think.

Q. 6. Did you ever have any business dealings with either of these parties? A. Yes, sir.

Q. 7. Kindly relate what they were. A. Why, with Melling, Melling does work on crank shafts we make. We have done business with Melling for the length of time I have known him. He has also made a lot of special machines for us, and business dealings with Mr. Gordon have been just those I have had on the cam turning machine and parts for same.

Q. 8. Are you familiar with the Gordon cam shaft lathe illustrated in this circular?

By Mr. Dennett: Question objected to. The best evidence is the Gordon machine referred to in the ap-

plication of Gordon & Redlin involved in this interference.

Q. 9. Kindly state what connection you had with machines of this character.

By Mr. Dennett: Same objection as to the preceding question.

A. In the early fall of 1919 or in the summer of 1919 a fellow by the name of Redlin called on us for the Erd Motor Co. of Saginaw, about machining cam shafts. He told me he had designed a machine to turn all cams at once and it was being made in Milwaukee by Mr. Gordon, so we went to Milwaukee in the early fall of 1919 and saw the machine working in a machine shop in Milwaukee. I don't remember where the shop was. It was then running on Nash cams and it turned a couple of cams for us and the machine looked all right. We got back and ordered two of those machines which were to be delivered in October. The machines were not delivered—the first machine was billed out the 31st of January and got in our plant, and Mr. Gordon's son accompanied the machine in and worked on the machine about three days. We had it set up on a Ford cam shaft job. It was impossible for him to make this machine work, and he said he would have to send it back to Detroit, which they did. They shipped the machine back and sent out another machine. I don't remember just the date of arrival of that machine, but it was a short time after that. This machine was set up and run it on the Ford job until—that was in 1920, until September, 1920, at which time we took the job off the machine and put it back on the rough grinder. We got another machine in April. Bought this machine equipped for the Lycoming cam shaft and worked it in a way until October. It has never been working on the job since. During this time after we bought the Lycoming machine, the machine would not work when it got here, and a Mr. Goddard was here for a number of weeks trying to get the machine to work. We were never able to turn the cam and get the shape close enough so we could run it on the finish grinders and have it right.

Q. 10. What efforts did you and Mr. Goddard make to cause these machines to work properly? A. We did

everything we knew how to make those machines work before we took the matter up with Mr. Goddard. He then sent in Mr. Goddard and we turned over the tool room and gave him a man and told him to stay right with im and help him make these machines work.

Q. 11. Do I understand the first machine never did work? A. The first machine worked and run cam shafts, but the class of work obtained from the machine, that came off the machine, was so bad we had to take it off the machine and go back to the old method of rough grinding for cost on the job to scrap was so high we couldn't afford to run the machine on the job.

Q. 12. You are now speaking of the first machine? A. Yes.

Q. 13. The one that Mr. Gordon's son tried to operate? A. Mr. Gordon's son gave the job up. I think he came back with the second machine the second time, that is, Mr. Gordon's son. The second machine I think he came back with for a short time. He was sent I think some place else, and I think there was another mechanic Mr. Gordon sent in the meantime. I don't remember his name.

Q. 14. You are speaking of the first machine as the one that was on the Ford cam shafts? A. Yes.

Q. 15. And the second machine was the one— A. On the Lycoming cam shaft job.

Q. 16. What were the results of the Lycoming job? A. We never did get any results on the Lycoming job, would run for about a quarter of a day and then have to go after something to repair it.

Q. 17. When you speak of scrap, what does that mean? A. That means any cam shaft or any shaft that will not finish.

Q. 18. If you will kindly explain why they would not finish. A. As I remember the Lycoming job the big trouble with that was on one side of the nose of the cam. The turning machine left a large hump. We are supposed to have 30/1000 stock finish, and these cams, on those humps, there would be as high as 90/1000 finish, and we had some we couldn't ship and they were scrapped. On the Ford cam, the biggest objection to that was that the masters would not hold the tool in position and the tool would drop back and take a straight cut across the nose about an eighth of an inch deep, dig out a place in the

nose cam the width of tool and about an eighth of an inch deep. We also had considerable trouble on the Ford cam in trying to keep the line up of the shafts with the noses of the cams. This line would shift during the day, and then we would have to stop and line the job up again.

Q. 19. Where are those machines now you purchased? You still have them? A. We still have them setting in a shed back of the plant.

Q. 20. Did you personally have anything to do with Mr. Goddard when he was working on these machines. Did you observe his efforts and what he did? A. Yes, I did. Mr. Goddard's efforts seemed to be to change the masters so they would take care of the errors the machine made in turning the cam on the Lycoming job.

Q. 21. Did he do any work on the Ford job, Ford machine? A. I don't remember so much about what he did on the Ford machine, but I know one thing we did was to put some little springs on the back of the Ford machine which tended to hold that tool up better. That was done by our man Weisel.

Q. 22. As I understand the ultimate result was the scrap was so great you felt forced to discontinue this machine in which you had invested? A. Yes, sir.

(Q. 45, page 140, to and including Q. 72 and Answer, page 145.)

Q. 45. I show you the patent drawings of the Gordon & Redlin application involved in this interference and ask you if these drawings illustrate the kind of machine that you saw working in Milwaukee in 1919 and the kind of machine you purchased? A. Yes, sir.

Q. 46. This is the same kind of machine? A. The same type of machine.

Q. 47. How about that machine you saw working in Milwaukee in 1919 of Gordon & Redlin's from your investigation of that machine? Was that working satisfactorily in the sense that it was doing the work the machine was called to do? A. Yes, but I only saw one shaft turned and I didn't check the shaft for contour, but the shaft looked all right when it came out. I didn't check that shaft or go into it at all. I just watched them run one shaft.

Q. 48. On the basis of what you saw of the work of that machine you ordered a machine of that kind? A. I think we sent Mr. Gordon prints of our different shafts, and after he said he could turn those shafts, we ordered two of the machines.

Q. 49. That order for two machines was given at the same time? A. I think so. I think I have got the order in my pocket.

Q. 50. Afterwards, you ordered another machine? A. No, sir, we never ordered but two machines. We might have ordered another machine when they sent that first one back. I don't remember that. They sent that back on their own accord. I don't think we put in another order for that machine.

Q. 51. As far as you know? A. We only ordered two machines.

Q. 52. These were both ordered prior to taking this matter up with Melling of his making a machine? A. Yes.

Q. 53. Have you that order in your pocket? A. Yes, in my overcoat pocket there is a bunch of papers. That is our copy of the order. You notice that second machine was ordered for Chandler but we afterwards put Lycoming on.

Q. 54. All right, much obliged. Do you know anything about the use of Gordon & Redlin machines at the present day for turning cam shafts? A. No. I understand some people are still using them. Some that bought them are not using them. I never have seen any of the Gordon & Redlin machines in operation in any other place but our own plant and that one time in Milwaukee.

Q. 55. Did you personally make any investigation of these Gordon & Redlin machines which your company had to see what the trouble was with them that gave you trouble? A. Why, on the first machine I did.

Q. 56. What was the trouble you found with the machine that gave you the trouble in producing the cam shafts in the form you desired to produce them? A. In the first place, as I remember it, the clutch on their machine was no good. Another thing, the masters were not right, and I say as I said before we used a larger spring to try and hold that tool from cutting across the nose of the cam. We installed those springs at our own plant.

Q. 57. When you installed those springs did that remedy the defects? A. To some extent but not entirely.

Q. 58. What particular springs do you refer to and you refer to the Gordon & Redlin patent application drawings and the reference numerals on the springs? A. On that spring. Let's see. I don't remember whether we changed that spring or not, but we changed the other spring. Where is that spring that goes straight out the back? Yes.

Q. 59. You changed spring No. 49? A. Yes. I know we changed that one. I don't remember about the top.

Q. 60. You don't know about the spring No. 59? A. No. We changed most of those things on the say-so of their men. Another thing that was done with the masters on this first machine, we made up a master with sharp points to this nose. This is 44. They came over there and cut those points off that master so the blow would not be so strong when they dropped over that sharp point. Those were all cut off.

Q. 61. Did you pay any attention to those machines as to their general make-up as machines for quality of material used, accuracy of construction work, etc? A. Yes. The first machine as I remember came in there was about the rottenest built machine that was ever put in our plant.

Q. 62. Could the second be described more favorably or less favorably? A. I don't remember about the second machine so much on that particular point.

Q. 63. But the principle of operation in the machine as shown in the Gordon & Redlin application, the swinging arm controls in its movements swinging movements by a cam, and a cutting tool the angle, cutting angle of which was controlled by a special cam? A. Yes. The machines as I remember them were too light to work as they should. Mr. Goddard, one of Mr. Goddard's jobs was to put a steady rest between 24 and the table 5. Another thing, these rollers would not stand, roller No. 53 would not stand up. We changed this and changed this on the machine. That was an everyday job. Afterwards, the Lycoming cam shaft, he put a fly wheel on to keep the machine going right. I don't remember what he said that would do.

Q. 64. What in your judgment these matters related, to imperfections of the actual mechanical construction of these particular machines as distinguished from any difference in principle of operation? A. Found out that putting that spring on the back of that would not help it any. It would help to some extent, but would not correct the imperfection in the machine.

Q. 65. These particular machines? A. In any Gordon machine.

Q. 66. I thought you only had experience with these particular machines and didn't know about other Gordon machines? A. You said that was the same type of machine.

Q. 67. That is what I meant, but as I understood your answer just now in saying putting a heavier spring 49 in a Gordon machine would not correct an error which you found in the machines which you had in use, in holding the tool to the work. Is that right? A. Yes, but you asked me a question if it corrected the imperfections in the building of the machines.

Q. 68. Only in so far as you had referred to putting in a spring, a stronger spring. A. I said that spring did not correct any bad workmanship on the machines, that is if the machines were built, were not built right, that spring was not put on there to correct the building of the machine. It was put on there to correct the principle of the machine, which it couldn't do. In other words, you don't keep the cutting angle of your tool right and the spring was put on there to try to keep that tool from cutting across the nose of the cam on account of the cutting angle not being right, and it dug into the cam and cut across the nose because the cutting angle was not correct and couldn't keep it correct. The only thing to do was to put that spring on there to hold it up until it got over that nose. That was not an imperfection in the building of the machine—all machines would be built like that. Most of the other work done on the machine was to try and correct the rotten workmanship that was put on the machine with the exception of the Lycoming machine. On the Ford machine most of the work was to correct the rotten workmanship on the machine.

Q. 69. I don't think that we quite understand each other. You misunderstood my question. You had said you put on a heavier spring for the spring 49. A. Yes.

Q. 70. My question was intended to ask if putting a heavier spring on for spring 49 was intended to change the principle of operation of the machine.

Mr. Earl: The witness has just said they attempted to remedy defects in the principle.

Q. 71. That is the point my question was aimed at. As originally put there was whether the principle of the machine remained the same after you had changed the spring and after other things had been done to the machine, or whether the changes that were made changed the principle of operation of the machine. A. No change we made would change the principle of operation of the machine. That was not your question though as I remember it.

Q. 72. Do you know who built those Gordon & Redlin machines you bought? A. Yes, I know who built them, but can't remember who they are—Eastern Production Co. of Detroit.

BERT WEISEL:—

(Q. 1, page 190, to and including Q. 55 and Answer, page 198.)

DIRECT EXAMINATION by Mr. Earl.

Q. 1. What is your age, residence and occupation? A. My age is thirty-two; residence 407 West Main Street, Jackson, Michigan; occupation, tool designer.

Q. 2. How long have you been engaged or employed as a tool designer? A. Three years.

Q. 3. What was your work before that time? A. Tool making.

Q. 4. Where are you now employed? A. Jackson Motor Shaft Company.

Q. 5. The term of your employment there? A. About seven years.

Q. 6. Prior to that time? A. American Gear Company.

Q. 7. As a tool maker? A. Yes, as a tool maker.

Q. 8. For about how long in all as tool maker and designer? A. About thirteen years.

Q. 9. Are you acquainted with both Mr. Melling and Mr. Gordon? A. Yes, sir.

Q. 10. How long have you known each of these? A. Mr. Gordon I know only by acquaintance since late in 1919, I think.

Q. 11. How long have you known Mr. Melling and in what connection? A. I have known Mr. Melling personally for seven or eight years.

Q. 12. Do you have any knowledge of a cam shaft turning lathe known as the Gordon? A. Yes, sir.

Q. 13. Do you have any knowledge of a cam shaft turning lathe known as the Melling? A. Yes, sir.

Q. 14. Have you had any experience in the operation of the Gordon machine? A. Yes, sir.

Q. 15. Kindly state what that experience was in a general way. I am not asking for details at this time, but merely in general. A. My first experience with a Gordon machine was when the machine was first set up that the lift on the tool rotating cams were so high that the rollers, when dropping from the top of the nose, would cause considerable trouble. It was not practical and would not work so the first machine was shipped back to Detroit and was overhauled and we received that machine back, and still it would not work.

Then Mr. Goddard was brought on the job at the Motor Shaft plant and he ground this high lift off the tool rotating cams which made the machine run better but yet the machine would not produce accurate work, the surface of the cams being very irregular, which they tried to overcome by altering the master cam.

Q. 16. I show you a copy of the drawings of the Gordon & Redlin application involved in this interference. Are you able to read drawings? A. Yes.

Q. 17. Is the Gordon & Redlin machine you referred to illustrated in these drawings? I don't intend this question to mean that it be the same in all particulars but in general. A. You did not intend it in all particulars?

Q. 18. No; in general, was it the same? A. Yes.

Q. 19. Kindly point out the cam that you refer to as the master cam. A. The tool rotating master is this

marked 44 (indicating) and the master cam that they altered is marked 43 (indicating).

Q. 20. Did you have to do with the operation of this machine? A. Well, not in the operation of the machine, but in a way of overhauling and repairing, I helped Mr. Goddard.

Q. 21. I do not just understand what he was attempting to do in changing the cam 43. Did you know what his object was in making those changes? A. The object in making those changes was the rough surface of the cam and they altered this cam to overcome the error in the work being produced, which was not accomplished. Due to cutting off the nose of the tool rotating master which gave more tool resistance in turning the nose, it became very often the case that the nose was torn so that the shaft was scrapped.

Q. 22. Was an attempt made to operate the machine with the sharp cams that you have spoken of? A. Yes, sir, it was attempted but never worked.

Q. 23. Are any of the cams before you on this desk like or similar to the sharp cam you spoke of? A. Yes, sir.

Q. 24. Will you indicate? A. This is the nearest. (Witness refers to Melling's Exhibit 20B.)

Q. 25. Will you kindly mark on this cam with your initial the changes that were made as near as you can? A. It was about that; I would not say it was exactly that.

Q. 26. Please put your initials on that.

(The witness has marked Melling's Exhibit 20B and indicated the mark with "B. Weisel.")

Q. 27. Do you know the reason for cutting off or modifying these cams that were on the first Gordon & Redlin machine delivered to you?

Mr. Earl: Did you understand the question?

A. Yes. There were several reasons for that. The main reason was that the roller pins would not stand the severe shock of dropping the distance from the point of the nose to the base of the cam under the heavy spring tension which was required to keep the tool in contact with the work. The reason for such heavy spring tension was brought about by the tool while coming up the nose of the cam getting at such an obtuse angle that the cutting re-

sistance was so great that it required extra heavy spring tension, and different angular relation of the tool to the work at this point of the cam was the cause of considerable of the scrap from the Gordon & Redlin machine.

Q. 28. Please state in general what efforts were made to overcome these objections, that is, the extent of the efforts.

Mr. Dennett: Question objected to unless relating to efforts of Gordon & Redlin.

Mr. Earl: It is all right for you to go ahead and answer the question.

A. Mr. Gordon sent a man of the best caliber to take care of such troubles. This was Mr. Goddard I have spoken of before who spent considerable time trying to make these machines work. Mr. Goddard worked very faithful, trying in every way possible to make these machines operate.

Q. 29. You have spoken of "machines"; I believe only one machine had before been mentioned. How many have you had experience with? A. Two.

Q. 30. Did Mr. Goddard work on both machines? A. Yes, sir.

Q. 31. I do not know that it has been definitely brought out where this took place. A. What are you referring to?

Q. 32. Your experience with these machines. A. At the Jackson Motor Shaft Company, at Jackson, Michigan.

Q. 33. What assistance, if any, did the Jackson Motor Shaft Co. render Mr. Goddard in this connection? A. While Mr. Goddard was at the Jackson Motor Shaft Co. he was given any assistance asked and was also given free use of the tool room to make any change that he required.

Q. 34. Was any assistance offered in the way of labor? A. Well, didn't that just cover it? He was given any assistance that was asked and he had one man working with him continually when he needed him.

Q. 35. Do you recall about how long a period this extended over? A. I am not positive, but I think about eight months.

Q. 36. Do you recall about when these machines were received by the Jackson Motor Shaft Co.? A. Some time in January, 1920, I think.

Q. 37. Are the machines still in operation? A. They are not.

Q. 38. When was the operation of these machines discontinued, or the attempt to operate them discontinued? A. I could not say definitely.

Q. 39. Can you state why the use was discontinued? A. The use was discontinued on account of their scrap percentage going so high. I dare say the scrap percentage of the Gordon & Redlin machine over the old method was ten to twelve per cent.

Q. 40. Did you return to grinding when you discontinued the use of these machines? A. We did.

Q. 41. What in your judgment was the cause of there being so much scrap with the Gordon & Redlin machine?

Mr. Dennett: Question objected to. Witness is not qualified to give testimony in regard to the principle and operation and construction of machines as distinguished from tools.

Mr. Earl: You may go ahead with your answer.

A. Well, the tool not maintaining the proper cutting angle would cause the tool to tear through the nose and scrap the cams, and the irregular surface caused by this error would also cause trouble in lining the cams on the cam grinder so that they could save what they did.

Q. 42. Can you produce a sample of the cam shafts cut on the Gordon & Redlin machine in your factory, or the Jackson Motor Shaft Company? A. Yes, sir.

Q. 43. This is the one? (indicating) A. That is the one, yes, sir. We have several of them.

Mr. Earl: The shaft produced by the witness is offered in evidence as Melling's Exhibit No. 36.

Q. 44. Is that a shaft such as you have referred to as scrap, or is it a good shaft? A. This is scrap.

Q. 45. Do you know what automobile engine that shaft was intended for? A. Yes, sir, the Lycoming.

Q. 46. While you were operating these machines were they run continually? A. They were not.

Q. 47. Kindly state the reason for their not being run continually. A. The reason the machines were not run continually was that they were being repaired.

Q. 48. When they did run, was the work resulting other than the so-called scrap true to contour? A. It was not; in fact, we never did any shafts on the machine that were true to contour.

Q. 49. On what portion of the cam did the most trouble occur? A. While turning up the side of the nose, and this trouble also occurred around the base circle of the cam, but not as great as at the point where the tool became so clearly out of cutting angle. The irregular surface of the base circle of the cam was caused by the resistance of the tool while turning the nose of the cam near to it. In fact, we had several cams to my knowledge that would not clean up in the finish grind directly opposite the nose.

Q. 50. I wish you would state a little more specifically what might be understood from "cleaning up in the finish grind," having in mind that the parties likely to consider this record have not had any practical experience. A. This was on account of the tool marks and the irregular surface of the cam.

Q. 51. You have spoken about the tool getting into an obtuse angle in relation to the work. What is the normal angle in this Gordon & Redlin machine of the tool to the work? A. As I understand this question, the normal angle of the tool to the work on the Gordon & Redlin machine is the cutting angle and is at right angles with a perpendicular line while turning the base circle.

Q. 52. Then I take it that this angle is not maintained? A. This angle is not maintained.

Q. 53. Please state what the effect of this variation in cutting angle has in the Gordon & Redlin machines which you saw in operation. A. I could not state exactly what the variation was but I would say around 20 to 30 degrees.

Q. 54. I apparently did not make my question clear. What I had in mind was the effect this variation in cutting angle had on the work. A. That was explained several times.

Q. 55. Never mind; just consider that I am dense about it. A. The effect of this cutting angle is that it causes more resistance to the tool at that point when it becomes out of angle which causes an error in the contour of the cam. This error is the reason that the cams do not clean up in the finish grind. The Jackson Motor Shaft Company,

while using the Gordon & Redlin machine, tried in every respect to use these machines if possible. They even went so far as to add considerable more stock on these cams trying to see if they could not use them, which proved very unsatisfactory.

Mr. Goddard, while at the Jackson Motor Shaft Company plant, made a complaint that the reason the Gordon machine did not work was because we had it standing near a grinder. By this they moved the machine and new tool holders and liner bushings, and all the necessary parts that Mr. Goddard thought necessary, were put on this machine and yet it didn't do any different work after he had it overhauled.

(XQ. 84 and Answer, page 203.)

CROSS EXAMINATION by Mr. Dennett.

XQ. 84. You spoke about Melling's machine being a lighter machine than the Gordon & Redlin machine at the Jackson Motor Shaft Company works. In doing the work with the Gordon & Redlin machines was all the excess stock taken off at one cut or attempted to be taken off with one cut? A. Yes, sir.

(XQ. 100, page 205, to and including XQ. 102 and Answer page 206.)

XQ. 100. What kind of tools were used by the Jackson Motor Shaft Company on those Gordon & Redlin machines; the same kind of tools that were illustrated and described by the Gordon & Redlin application involved in this interference which are illustrated by Figs. 6 and 7 of the drawings as generally circular in form with a notch cut out and which are described in the specification of the application papers as follows?

> "The tool holders may be provided with cutting tools of any suitable form, having cutting edges disposed radially to and their points at the center of the axis of oscillation.
>
> "As shown in Figs. 3, 4, 5, 6, 7 and 14, circular or segmental tools 37, are fitted and adjustably held in corresponding recesses in the sides of the tool holders by bolts 38, passing through the tool holders at a slight

inclination to their axis and centrally threaded in the tools. The tools are formed with angular notches or recesses in their peripheries to provide cutting edges which are disposed radially both to the axis of the tools themselves and of the tool holders, with the points at the centers of the tool holders. The tools are formed with peripheral helical teeth engaged by adjusting screws 39, swiveled in holes or sockets formed in the tool holders transversely to their axis. The slight inclination of the axis of the tools to the axis of the tool holders, as shown in Fig. 5, provides for the proper clearance of the tool below its radial cutting edge 40."

That is to say, would the tools used in those Gordon & Redlin machines have their cutting edges disposed radially to the axis of the tool so that they are end cutting tools as distinguished from point cutting tools? A. Yes, sir.

XQ. 101. Did and do the machines of Melling which are at the Jackson Motor Shaft plant do their cutting on the sides of the cam or cams in the same manner in that respect as the tools of the Gordon & Redlin machines? That is, as a general proposition, without making any distinction that you may have in mind as to proper cut. A. Yes, they have an end cut in that respect, but they do not work the same.

XQ. 102. End cut on the ends of the cams, you mean? A. Yes. They could not cut it otherwise; they have to start at the end and turn it some way.

(XQs. 115 and 116 and Answers, page 210.)

XQ. 115. Where were the cam shafts made that the Jackson Motor Shaft Company used on the Gordon & Redlin machines while it was using those Gordon & Redlin machines? A. On the Ford shaft, I cannot state this answer as the Ford factory furnished the shafts. As to the Lycoming shaft I cannot state where they were purchased at the time we were using the Gordon & Redlin machine.

XQ. 116. How many Gordon & Redlin machines do you personally have knowledge of that were used by the Jackson Motor Shaft Company of Jackson, Michigan? A. Two.

(XQ. 121, page 211, to and including RDQ. 150 and Answer, page 219.)

XQ. 121. And can you testify of your own knowledge that on those cam shafts which were torn through the noses that the tools on the Gordon & Redlin machines were properly ground and sharpened and otherwise in proper condition for cutting cam shafts at the time these noses were torn off? A. Yes; and I can recall times when these tools were ground by a representative of the Gordon Company, being Mr. Goddard, he grinding these tools himself.

XQ. 122. Were the noses ever torn off except when Mr. Goddard ground the tools? A. Yes, sir.

XQ. 123. Now, in those cases where the noses were torn off when Mr. Goddard did not grind the tools, were the tools in proper shape for the work they were intended to do as to sharpness and general condition otherwise? A. These tools were ground only on one face; the only chance for error in grinding these tools would be merely in the rake angle.

XQ. 124. That was just the question that I asked; whether or not the tools were properly ground and in proper condition, as a matter of fact, when the noses were torn off and Mr. Goddard did not grind the tools. A. This question I could not state definitely as I was not the operator of the machine but many times I ground the tools for these machines according to Mr. Goddard's instructions; but whenever I had been called to the machines when they were having this trouble I found the tools in as good condition as a man operating a machine and having knowledge of grinding tools could do without being ground by a tool man or by extra expense of being ground in a special fixture.

XQ. 125. Did you examine the cam shafts carefully which were being cut at the time the noses were torn off, as you referred to? A. Yes, sir.

XQ. 126. Was there any indication that excessive metal to be removed from the nose portions of those cams as compared with other cams that were being cut? A. In regard to the Ford shaft, when we first received the Gordon & Redlin machine we had excess stock on the nose. This was objected to and the Motor Shaft Company arranged with the Ford people to have their dies changed and they

made a set of lock dies which produced the best forging to my knowledge while with the Motor Shaft Company, and yet we had the same trouble of tearing through the noses.

XQ. 127. How many of those cam shafts produced by these lock dies ever came in to the Jackson Motor Shaft Company plant prior to the time that Mr. Goddard had left the plant in connection with the Gordon & Redlin machines? A. I could not state the exact number, but it was several thousand.

XQ. 128. And during the period from the time the Gordon & Redlin first machine was installed in the Jackson Motor Shaft Company plant to the time of discontinuance of use of the Gordon & Redlin machines at that plant, about how many cam shafts were turned on the Gordon & Redlin machine altogether, if you can recall? A. I cannot state this question but it could be found on the records at the Jackson Motor Shaft Company.

XQ. 129. And while the Jackson Motor Shaft Company was using these Gordon & Redlin machines and prior to the time that they commenced using the Melling machine, were they also finishing cam shafts by the methods of rough grinding to which you refer on the direct examination? A. Yes, sir.

XQ. 130. And when you testified on your direct examination that the scrap of the Gordon & Redlin machines over the old method of grinding was ten to twelve per cent, you meant while the two methods were being used at the same time at the Jackson Motor Shaft Company shop here at Jackson, Michigan? Did you or did you not? A. I did not. When we received the Gordon & Redlin machine we stopped our Ford job on the grinders expecting great results from the Gordon & Redlin machine but when we could not get production on the Gordon & Redlin machine our only resort was to go back to the old method of grinding.

XQ. 131. Did the Jackson Motor Shaft Company actually produce cam shafts by the rough grinding method or the old grinding method at the same time that they were using these Gordon & Redlin machines and as a part of the operations on the same kind of cam shafts and the same batch or shipment of cam shafts? A. Not to my knowledge.

XQ. 132. Do you know whether the excess material to be reduced from the noses of the cams on these cam shafts

is increased as the drop forging dies wear or is it decreased? That is, on the nose. A. I should say this would be decreased.

XQ. 133. Referring to this Melling's Exhibit 36; this has eight cams on it disposed in different angular relation from any point taken as a point of reference. Wouldn't it be probable that one or more of those cam noses on the rough shaft as it came from worn dies would have excess material over what a cam shaft made in the same set of dies when new would have? A. I should not think so.

XQ. 134. When a Gordon & Redlin machine tore the nose off from one cam, it tore the noses off from every cam on the shaft in the machine, didn't it? A. It did not.

XQ. 135. Do you know what caused this selective action of the Gordon & Redlin machine to tear the nose off one or more cam shafts and not tear the nose off from another or others? A. This is caused by the tool being out of cutting angle and the variation in the stock which causes this trouble may be in the straightening of the shaft. This being the case the stock would not be uniform at all points, which could not be expected from a forging.

XQ. 136. Did the Jackson Motor Shaft Company make any physical or chemical tests of the material of these cam shafts from which these noses were torn by the Gordon & Redlin machines to ascertain whether there was an inferiority or a departure from any specifications of the material used in them? A. The Jackson Motor Shaft Company did not analyze any material, to my knowledge, at that time, or they do not analyze any materials in their forgings used at the present time.

XQ. 137. Then, they made no physical tests of the characteristics of those forgings? A. They did not.

XQ. 138. Did you ever personally see a nose torn off from a cam as you have testified when the cam was being turned in the Gordon & Redlin machine so that you personally observed what happened? A. Yes, sir.

XQ. 139. Now, just state precisely what you saw happen in the Gordon & Redlin machine when the nose of a cam was torn off during the operation of the machine. A. This, as I saw it happen, was a snap which indicated that the tool rotating cam roller left the cam at this point, there being nothing but the spring to hold it in contact.

XQ. 140. If the spring to which you refer had been powerful enough to hold the roller in contact with the cam to which you refer, in your opinion would the nose have been torn off from that cam? A. Mr. Goddard, while at our plant, tried different spring tensions on this machine which produced no better results.

XQ. 141. How many times did you see the noses of cams torn off by one of these Gordon & Redlin machines while they were being operated at the Jackson Motor Shaft Company plant? A. I have seen several of them, not knowing the exact amount.

XQ. 142. Now, when you speak of these noses being torn off, you mean that the cutting tool or cutting tools cut them off, don't you? A. No, they do not cut them off. The tool getting out of angle and having such great resistance at this point causes them to tear through the noses. Now, this does not occur all the way across the nose; for instance, you see it would turn along the surface of the cam 1/16 of an inch, then this snapping action would take place and tear a place through the nose of the cam, and then proceed along the surface of the cam a little further and repeat this operation. And maybe this same operation would occur as high as seven or eight times while going across the width of the cam.

XQ. 143. Do you recall how many revolutions of the cam were required to pass the Gordon & Redlin tool entirely across the cam from one face to the other with reference to the cams to which you refer in your last answer where you said that a certain action might occur seven or eight times in the passage of the tool across the face of the cam? A. As there is no plate on the Gordon & Redlin machine indicating the required feed per revolution, I could not state how many revolutions the shaft made in turning the width of the said cams.

XQ. 144. But the seven or eight times mentioned by you when the action mentioned by you took place, as I understand, did not account for the entire number of revolutions, taken to cut the cam. In other words, I understood from your answer that the tool would cut all right at places but would not cut all right at other places while cutting the same cam, and those places referring entirely to cutting around the point or nose of the cam. Did I understand you correctly? A. Yes, sir.

XQ. 145. You have referred to the Gordon & Redlin tool, or tools on those Gordon & Redlin machines, not maintaining a proper cutting angle. You do not mean by that the angle known as the rake angle or the angle known as the clearance angle, do you? And by these angles, rake angle and clearance angle, I am using these expressions as defined in the text books and accepted authorities and as also testified to by an expert Professor of Mechanics called on behalf of Melling in this case; and if there is any possibility of your misunderstanding the sense in which I am using these words, say so, and I will have you supply your own definitions. A. I do not just understand your terms.

XQ. 146. By rake angle I mean the inclination of the cutting edge of the tool 37 of the Gordon & Redlin application involved in this interference as described in the Gordon & Redlin application involved in this interference, which states on page 5 of the specifications that the tools, referring to these tools 37, are formed with angular notches or recesses in their peripheries to provide cutting edges which are disposed radially both to the surface of the tools themselves and of the tool holders with the points at the centers of the tool holders. What I mean by rake angle is the angle that the cutting edge of that tool makes with the surface of the work to be cut and what I mean by the clearance angle is the inclination of the axis of the tools to the axis of the tool holders which the specification says provides for the proper clearance for the tool below its radial cutting edge.

In other words, the rake angle and the clearance angle to which I am referring are to be measured in a direction parallel with the axis of the work to be cut, whether it be cam shaft or other shape, and the angles themselves are to be determined by measuring from the surface of the work to the face of the cutting edge of the tool for the rake angle, and for the clearance angle is to be measured from the face of the work below the cutting edge of the tool to the tool.

A. The clearance angle is not maintained.

Mr. Earl: Now answer as to the rake angle. A. Well, the rake angle is ground on your tool but the top angle of your tool is also in error.

XQ. 147. Looking at Fig. 5 of the Gordon & Redlin drawings of their application involved in this interference,

you will note that the tool is set in a tool holder, the tool being numbered 37 and the tool holder being numbered 34, and that the tools are bolted to the tool holders by bolts 38, thereby maintaining the tools in fixed relation with their respective tool holders at all times.

In such a construction, is there any possibility of the rake angle, as I have defined it, and the clearance angle, as I have defined it, changing its relation to the work in the machine illustrated and described by the Gordon & Redlin application involved in this interference?

Mr. Earl: The question is objected to as a misstatement of fact. There is no warrant for it in the Gordon & Redlin drawings or specification.

A. The rake angle will not change but the clearance angle is not held by the bolts stated, but the clearance angle works in accordance with their tool rotating master cam on the back of the machine.

XQ. 148. Now, in addition to the rake angle and the clearance angle as defined and pointed out in the specification of the Gordon & Redlin application, another angular position or relation of the tool to the work is recognized and that is provided for by the tool 37 being mounted in the tool holder 34 which means including a cam 44 for changing the angular relation of the edge or cutting edge of the tool to the work as the work is revolved, so that the tool will be presented to the work in a proper position for doing its work as this tool must be presented to cut the work in such a manner that the cutting edge of the tool does not become tangential to the work to be cut.

You recognize this construction in the drawings of the Gordon & Redlin application before you as being the same general construction contained in the Gordon & Redlin machines at the Jackson Motor Shaft Company plant, do you not? A. What was the first part of the question? (Reporter reads question.) They are.

Mr. Dennett: Cross examination closed.

RE-DIRECT EXAMINATION by Mr. Earl.

RDQ. 149. The Gordon & Redlin tool 37 of the Gordon & Redlin application has a surface marked 40. Do you refer to that surface as the rake of the tool? A. The surface 40 is the rake of the tool to my knowledge.

RDQ. 150. What is the clearance of the tool, as you understand it? A. The clearance angle of the tool is the angle between the surface of the cam and the heel of the tool.

(RDQs. 153 and 154 and Answers, page 220.)

RDQ. 153. Are these cutting and clearance angles maintained in the Gordon & Redlin machines with which you are familiar? A. They are not.

RDQ. 154. Referring to Fig. 14 of the Gordon & Redlin drawings, the part marked 40 appears to be inclined. Is that what you mean by rake? A. Yes, that is the rake angle.

(RDQ. 166, page 222, to and including RDQ. 177 and Answer, page 224.)

RDQ. 166. Do you recall what the production was at its best with the Gordon & Redlin machine used in your factory? A. I cannot recall in my mind any one full day's production on account of tool troubles and other troubles.

RDQ. 167. Were there any parts to remove from the shafts produced on the Gordon & Redlin machine when they were taken from the machine? A. Yes, there was always a flash on the edge of the cam which was broke off by the tool corresponding to the shape of the cam and this was about 1/32 of an inch thick, or in case of real sharp tools it might be a little less, but they were always on the shafts and had to be removed, which took extra labor.

RDQ. 168. Were such "flashes" left on the work turned out by the Melling machines? A. They were not. We don't even have to file the burrs on the shafts as we did from the rough grinders.

RDQ. 169. What, if anything, limits the speed on the Gordon & Redlin machine? A. My answer to this question would be that the tool rotating arm roller could not follow the master cam.

RDQ. 170. What have you to say as to the relative amount of work on the finish grinding on the cam shafts turned out by the Melling machine and those from the Gordon & Redlin that you attempted to operate?

Mr. Dennett: Question objected to as incompetent, inadmissible, immaterial and irrelevant to the issues of this interference.

A. You want that answer?

RDQ. 171. Yes. A. I could not state the exact number of shafts more that is produced now off the Melling cam turning machines on the grinders but as I remember it, on the Ford job which was run on the Gordon machine fifty shafts per day from the finish grinder was about the best result accomplished. When we run this Ford shaft on the Melling machine the finish grinder's production for a ten hour day was eighty shafts. Of course, having to leave more stock on the shafts turned on the Gordon & Redlin machine and the fault of having to favor these cams on account of irregular surface made this great difference in production.

RDQ. 172. Did you ever see a cam shaft turned on the Melling machine in which the nose had been torn off? A. No; and this feature is impossible, as the tool is held in relation to the cam by the tool rotating master.

Mr. Dennett: The answer after the word "No" is objected to as volunteered, argumentative and not responsive to the question, and is further objected to for the reason that the witness on his examination heretofore has shown that he is not qualified to express any opinion upon the relation of the tool to the work in the Melling machine.

RDQ. 173. Was the feed on the Gordon & Redlin machines changed while in your factory? A. I could not state positively but I think Mr. Goddard tried every possible way to overcome the troubles.

RDQ. 174. You have been asked about the materials in the cam shafts on which these machines operated. Did you ever have any complaints come back to you because of the use of improper materials in the cam shafts? A. No, sir.

RDQ. 175. You were examined yesterday by Mr. Dennett as to there being pantograph action in the Gordon & Redlin machine. Is there, in your opinion, such an action in that machine? A. If there is, I cannot see it.

RDQ. 176. What is the purpose of pantographs? A. The purpose of pantograph is the reproduction of an object, either in enlarged form or smaller, of the same object.

RDQ. 177. Is there anything reproduced in the Gordon & Redlin machine, considering the action on one piece of work and in a series of successive pieces? A. No, there is not.

(RDQ. 183, page 224, to and including RXQ. 193 and Answer, page 226.)

RDQ. 183. As I understood your testimony, you personally assisted in grinding and keeping up the tools of the Gordon & Redlin machines? A. Yes, sir.

RDQ. 184. What have you to say as to the efforts to maintain those in best possible condition? A. We exerted every effort to maintain these tools for the Gordon & Redlin machine at proper cutting angles as instructed by Mr. Goddard and Mr. Gordon's son.

RDQ. 185. I had in mind particularly the grinding of the tools, keeping them sharp and properly ground. A. The tools were kept sharp and properly ground.

RE-CROSS EXAMINATION by Mr. Dennett.

RXQ. 186. Referring to these photographs Melling's Exhibits 18B and 18D, the cutting tools shown thereby are not shown as removing any material from the cam, are they? A. They are not.

RXQ. 187. Referring to the Gordon & Redlin drawings of their application involved in this interference, and particularly Fig. 14 thereof, you will notice a screw 39 which the specification describes is for the purpose of adjusting the tool. Now, in that Fig. 14 the cutting edge 40 of the tool is shown substantially horizontal when considering the relations of the tool to the sheet of drawings. By turning screw 39 and rotating the cutting tool 37 about the bolt 38, do you call that adjusting the rake angle of the tool? A. I would not.

RXQ. 188. You in your re-direct examination were referred to the drawings of the Gordon & Redlin application and as I understood you, you said that the bevel illustrated below the cutting edge 40 in Fig. 14 was the rake angle. A. Yes, sir.

RXQ. 189. Looking at Fig. 14 and considering that the parts are reversed from the positions shown in Figs. 3 and 4, for example, are you still of the opinion that the angle you identified as the rake angle is the rake angle of the tool, or is it the clearance angle of the tool? A. To my knowledge it is the rake angle.

RXQ. 190. Referring to Fig. II of the drawings of the Melling application involved in this reference, you will

notice that the cutting edge of the tool and the body of the tool is inclined upwardly at an angle from the horizontal. In using the Gordon & Redlin machines did you incline their cutting tools 37 so that the cutting edges 40 thereof were inclined upwardly at the same angle as the angle of the Melling drawing, Fig. II? A. We did not. Our instructions were to grind the tool radial on the rake and straight face.

RXQ. 191. Were you given any instructions as to angle with respect to the horizontal that the cutting edge 40 should be set by the screw 39 for any one particular job or for different jobs? A. The adjusting screw 39 spoken of was used to bring the cutting surface 40 to the center of the tool rotating block. If you put the exact point 40 of the tool above center, you would have no clearance on the heel of your tool.

RXQ. 192. Does the Gordon & Redlin machine, assuming that the construction is perfect so that there is no play or distortion of parts, accurately and mathematically trace a predetermined outline by the point of the cutting edge 40 of the tool 37? A. Will you read the question. (Reporter reads question.) That is considering it without a cut?

RXQ. 193. Yes, you can consider it without a cut. A. My answer is yes.

(*RRDQ. 207 and Answer, page 229.*)

RE-RE-DIRECT EXAMINATION by Mr. Earl.

RRDQ. 207. Would it be possible to make a cam shaft that could be used by finish grinding this cam shaft Exhibit 36?

Mr. Dennett: Question objected to as the answer is perfectly obvious "Yes." A piece of metal is there and it can be shaped into anything that its shape will permit.

A. This shaft Exhibit No. 36 could not be finished and saved as a good piece of work on account of going under the manufacturer's specifications of size, this being caused by the irregular surface of the cam which would not allow it to clean up at a specified size.

FRANK STEINKE:

(Q. 1, page 230, to and including RDQ. 66 and Answer, page 238.)

DIRECT EXAMINATION by Mr. Earl.

Q. 1. What is your age; residence and occupation? A. Thirty-six, age; residence 1407 Homewild; occupation, factory manager.

Q. 2. By whom are you employed as factory manager? A. Jackson Motor Shaft Company.

Q. 3. How long have you been connected with the Jackson Motor Shaft Company? A. Since 1911.

Q. 4. What has been the nature of your employment? A. Inspector and superintendent.

Q. 5. How long have you been engaged as superintendent? A. I don't know; three or four years, I guess; three years.

Q. 6. Prior to that time you were inspector? A. Yes, sir, chief inspector.

Q. 7. What is the nature of the business of the Jackson Motor Shaft Company? A. Making crank shafts and cam shafts.

Q. 8. Are you acquainted with both Mr. Melling and Mr. Gordon, parties to this interference? A. Somewhat; yes, sir.

Q. 9. Did you have anything to do with the operation of the Gordon cam shaft machines which are owned by the Jackson Motor Shaft Company? A. I did.

Q. 10. Do you recall when those machines were delivered to the company? A. About 1920, I think.

Q. 11. What have you to say as to the operation of such machines? A. I don't quite understand you, I don't believe.

Q. 12. Did you use those machines in the turning of cam shafts? A. Yes, sir.

Q. 13. What have you to say as to the degree of success with which they were used? A. Which machine?

Q. 14. The Gordon machine? A. We had no success with them.

Q. 15. Will you kindly explain briefly what was done in that connection in the matter of endeavor to make them a success. A. Goddard was there and worked on them; he

was there two or three times, I guess, trying to make them work. Our tool men worked at them and done all they could trying to make them go. I think Mr. Gordon, Jr., was the first man who was there trying to make them go.

Q. 16. Was a representative of the Gordon concern there the day you first tried the first machine? A. Yes, sir.

Q. 17. What happened at that time? Was the machine operated? A. Well, the machine when they started her up sounded like a gatling gun of some kind; rollers flew in all directions; pins broke off.

Q. 18. What was then done with that machine? A. The top of the master was cut off.

Q. 19. Kindly refer to the Gordon & Redlin drawings and designate by number the cam you refer to? A. 44.

Q. 20. Were the cams in the Gordon & Redlin machine as delivered to you the same shape as the cam 44? I call your attention particularly to Fig. 6 and the lift part of the cam. A. The machine was delivered to us with the master in them and the point was cut down later on, after the machine was set up and run for a day or two, I guess the first day.

Q. 21. Kindly indicate what you mean by "point" on the drawings or on the exhibits.

(Witness refers to the point of Exhibit 20B.)

Q. 22. Did the machines operate successfully after those points were cut off? A. No, they never operated successfully. They would run part of the time for a day or so and be passable, but did not stay there.

Q. 23. For how long a time did you attempt to operate these machines? A. Five or six months, I should say.

Q. 24. What was the reason for discontinuing the operation? A. We could not make them work—too much scrap.

Q. 25. Just explain what you mean by "scrap." A. The shafts were in such condition that they had to be thrown away; they could not be shipped to the customer.

Q. 26. I call your attention to Melling's Exhibit 36. Is that one of your shafts? A. Yes, sir.

Q. 27. Is that a satisfactory shaft? A. No, sir.

Q. 28. Kindly indicate wherein it is not satisfactory. A. There is a big hole in there (witness points); another

one there; here is one here and there is another one there; there is another one (witness points to the cams). The eccentric might clean up, it's doubtful.

Q. 29. Just what do you mean by "clean up"? A. Finish to the blue print.

Q. 30. How are these shafts finished after coming from the machines? A. They are first carbonized and hardened, straightened and ground.

Q. 31. In grinding the shafts, how are they inserted in the grinder? A. Between centers, driven from the dog.

Q. 32. Are they all ground uniformly? Are all the cams ground uniformly? A. Yes, sir. We line up on the first cam and get that to clean up and balance and they have got to be in relation to that first cam.

Q. 33. That is, they must be timed or distributed about the shaft in relation to that? A. Yes, to the first cam to start to grind them.

Q. 34. If they are not so related, what is the result?

Mr. Dennett: Question objected to as not relating to the issue of this interference.

A. They will not finish.

Q. 35. Did you have actual superintendence of the machines, of these Gordon machines, while they were being used? A. Yes, sir.

Q. 36. What caused these irregularities to which you have called attention, the holes? A. As near as I could figure it out, it was the tool did not either follow the master or the master was not built right. The tool did not stay on the right angle.

Q. 37. Do you mean that the position of the tool varied? A. From the center line, yes, sir.

Q. 38. What method had you used in the manufacture of these cam shafts prior to your purchase of the Gordon machines? A. Rough grinding in a Landis.

Q. 39. What method or machine did you use when you discontinued the Gordon machines? A. We went back to grinding; we did not at any time stop grinding. When we had Gordon's machines there we were grinding at the same time.

Q. 40. What have you to say as to the percentage of scrap resulting from the Gordon machines as compared with this grinding? A. There were days when we would

scrap all we turned and other days when the scrap wouldn't be so heavy. It's hard to strike an average of scrap the machines made; we never kept any record of that. I would say about 20% at least.

Q. 41. You have spoken about Mr. Goddard's efforts and your assistance or efforts in the attempt to secure satisfactory results with these Gordon machines. Could you be more specific as to the particular things that were done?

Mr. Dennett: Question objected to as for calling for incompetent, inadmissible, irrelevant and immaterial testimony in this interference proceeding and as being merely cumulative in character.

A. Goddard ground the small tool grinder around the holes and the master cams, bumps and ridges to overcome the places where it showed on the cam as being turned. He changed all the tool blocks; we machined them and fitted new tools to them. In fact, we worked day and night to get them going. We did everything possible; Goddard put a fly-wheel on the master cam and changed the springs and fitted some new tools.

Q. 42. What has been your experience with the Melling machines that you have in your factory? A. They have been very successful.

Q. 43. I neglected to ask you what became of these Gordon machines that you discontinued the use of. A. Threw them out in the shed.

Cross Examination by Mr. Dennett.

XQ. 44. You referred to the Jackson Motor Shaft Company finishing these cam shafts to which you refer to a blue print. Was a blue print the standard by which you judged of the accuracy of the finished cams as to size? A. The size was on the drawing, yes, sir.

XQ. 45. Then what you meant by "finishing to blue print" was finishing to size indicated on the drawing or blue print? A. Yes, sir.

XQ. 46. How much of a margin of error as to size was permitted by your inspection department before rejecting a cam shaft as scrap? A. Our inspection department was given that limit from Lycoming, plus or minus five thousandths.

XQ. 47. Plus or minus five thousandths would give you a total leeway of 1/1000 of an inch extreme limitation permitted you? A. Yes, sir.

XQ. 48. Did the Jackson Motor Shaft Company keep any record or records from which it could be established that the percentage of scrap cam shafts turned on the Gordon & Redlin machines was 20% in excess of similar cam shafts worked out on what you called the rough grinding machines? A. No, sir.

XQ. 49. Are you an officer of the Jackson Motor Shaft Company? A. I am superintendent, if that is what you call an officer.

XQ. 50. Is the Jackson Motor Shaft Company a corporation? A. I don't know.

XQ. 51. You referred to certain so-called holes in this Melling's Exhibit 36 and gave as your reason for their presence on the exhibit that the tool did not stay on the right angle. Now, just what did you mean by stating that the tool did not stay on the right angle, or words to that effect? A. Well, I have seen this Gordon machine with a finished cam in the machine with the tool up on the back side of the cam and the machine revolves and places where she would not stay with the cam shaft.

XQ. 52. You mean one of those Gordon & Redlin machines that the Jackson Motor Shaft Company has? A. Yes, sir.

XQ. 53. Who made that demonstration or test? A. Mr. Weisel.

XQ. 54. When did he make it? A. Last week one day.

XQ. 55. Are there any of the exhibits offered here on behalf of Melling that will show in any manner the test or demonstration that you referred to? A. This is not what I saw (indicating), I seen the machine.

XQ. 56. You have just referred to Melling's Exhibits 18B and 18D which I showed you and said that you did not see these, but had seen it on the machine. Do you mean that you saw a cam such as shown by these Melling's Exhibits 18B and 18D with a tool in contact with the periphery of the cam as shown by these two exhibits? A. I did not see it on the exhibits, I seen it on the machine.

Mr. Dennett: Will the notary please read the question?

(Reporter reads question.)

A. I see a cam, but I don't know whether it was the same cam or not.

XQ. 57. But in saying that the tool did not stay on the right angle, explain from these Melling's Exhibits 18B and 18D what you mean by what you term "the right angle." A. The tool did not stay in the same position as the cam is revolved and did not follow the cam which we had ground which was the right shaped cam.

XQ. 58. You had ground a certain cam which you put in the machine in the position in which a cam would be cut by the machine, is that correct? A. Yes.

XQ. 59. Did you in making this test or demonstration alter or change the Gordon & Redlin machine on which the test or demonstration was made in any respect? A. No, sir.

XQ. 60. And the point of the tool of the Gordon & Redlin machine followed around the periphery of the cam which you placed in the machine with a precise tracing action to trace the figure of the cam, did it not? The point? A. It did not follow the cam.

XQ. 61. It did not follow the cam? When you noticed that the point of the tool did not follow the cam, did you then change the cam which is marked 43 on the Gordon & Redlin drawings so that the point of the tool would follow the cam in the work holder? A. We did not.

XQ. 62. You did not? A. No, sir; Goddard might have done that when he was trying to make them run.

XQ. 63. Were you referring to the fact that the point of the tool did not stay on the periphery of the cam when you said the tool did not stay on the right angle? A. It did not stay on the periphery of the cam nor stay on the right angle.

XQ. 64. What is, or would have been, the right angle for the tool to have stayed upon to have stayed on the right angle which you have referred to? A. I don't know.

Mr. Dennett: End of cross examination.

RE-DIRECT EXAMINATION by Mr. Earl.

RDQ. 65. Do you know why the point of the tool did not contact with the periphery of this cam as the cam was revolved? Do you know why it did not? A. Do I know why it did not?

RDQ. 66. Yes, the point of the tool. A. No, sir. If I did we would have had those machines working.

WILLIAM CUNNINGHAM:

(Q. 1, page 288, to and including Q. 16 and Answer, page 293.)

DIRECT EXAMINATION by Mr. Earl.

Q. 1. State your age, residence, and occupation? A. My age is 34; address 711 Loomis Street, Jackson; occupation is machinist at the Walcott Lathe Company, now.

Q. 2. Were you ever employed by the Jackson Motor Shaft Company? A. Yes, sir.

Q. 3. During what period was that? A. From 1918 to February, 1922.

Q. 4. What was the nature of your employment while with the Jackson Motor Shaft Co.? A. When I first went in there, I was Assistant Foreman of the Cam Department, and after I was in there about three months, I was appointed the foreman of the Cam Department.

Q. 5. While you were connected with the Jackson Motor Shaft Co., as foreman of the cam department, I take it you mean the cam shaft department? A. Yes, sir; the whole cam shaft department.

Q. 6. Certain machines, which have been referred to in this case as Gordon cam shaft machines, are said to have been purchased by the Jackson Motor Shaft Company. Did you have anything to do with such machines? A. Yes; I was in charge of those machines.

Q. 7. Did you have charge of the manufacturing or finishing the cam shafts by means of the rough grinders? A. Yes, sir.

Q. 8. Kindly state your experience in using Gordon machines while with the Jackson Motor Shaft Company?

By Mr. Dennett: Question objected to for the reason that it is improper rebuttal, the only testimony given on behalf of Gordon and Redlin in the taking of their testimony with reference to the machines sold the Jackson Motor Shaft Company being as to the facts of the sale of those machines to the Jackson Motor Shaft Company.

By Mr. Earl: It seems to counsel for Melling, that counsel for Gordon and Redlin has forgotten the testimony of Mr. Gordon relative to the machines of the Jackson Motor Shaft Company, and I would call his attention particularly to the statements of Mr. Gordon in answer to question 70 and certain succeeding questions.

A. While I was in charge of the cam department, this Gordon machine came in. We had a lot of trouble with that, producing scrap right off the start. They first claimed that it was in the forgings, and we had the dies trimmed down and other forgings made, with a very small amount of stock. That didn't help it. When they were coming up on the side of the cam, on the nose, they would cut right into the side, and they wouldn't follow up, and our scrap ran as high as twenty to twenty-five per cent. Another excuse was the center bearings. They mentioned the fact that we held our center bearings within a .005 limit, and some were got out with .002 or .003, but that didn't help it any. I dare say today, if they were using the Gordon machines, the scrap would run 30 per cent, because on the shafts we were turning out at that time, we used to buff the side of the nose on the side where they would cut in, where they wouldn't maintain the cutting angle but would cut in; some of it that wasn't so bad, we were able to buff them and let them go through, but the way they require cams nowadays, there would have been a larger scrap report yet, if we used them that way.

Q. 9. Mr. Gordon made the statement that Mr. Schultz and others of his organization admitted that the wear on the Gordon machines was largely due to their being located in close proximity to the rough cam grinding machines, where the grit from the emery wheels deposited thickly over the entire machine. What have you to say as to that? A. Both of these Gordon cam lathes, they were both situated farther away from the rough cam grinders than the Melling cam lathe was. One was thirty-five or forty feet away, and I don't know as there could be much emery dust that far. Another thing, the emery must have got in as soon as they come into the shop, because they never worked right from the first day they come in. One of our first troubles was breaking the stud that holds the roller. Mr. God-

dard working with their tool trouble man at that time, made new studs and tried every way by carbonizing them, and heat treating the studs and rollers, trying to make them hold up, but it seemed to be impossible to get them to do it.

Q. 10. Do you recall, on parts being replaced by Mr. Goddard, that Mr. Gordon claimed the wear was due to emery?

By Mr. Dennett: Question objected to as not proper rebuttal.

A. Why, Mr. Goddard worked on them a long time. He spent a long time, as much as three weeks there trying to put them in shape, get them in working shape. The shaft, as it came off and tested out in the finishing room, that came off the Gordon machine, in a test would run as high as, take as high as twenty thousandths to twenty-five thousandths to clean it up, and a rough cam shaft, they ought to clean anyway at six to eight thousandths, whereas with nearly twenty-five thousandths left on there to grind after they came from the heat treat, it could be easily seen that there would be scrap that came off the Gordon machine, and why they couldn't use them.

Q. 11. Did the renewal of any parts show improved product? A. No.

Q. 12. Mr. Gordon made the statement that Mr. Schultz did not make allowance for the kind of forgings which were furnished or which it was intended to turn. What have you got to say as to the character of the forgings?

By Mr. Dennett: Question is objected to as improper rebuttal, and further objected to for the reason that Mr. Schultz is referred to, and not this witness.

A. Why, the forgings wasn't any different on that machine than were put on any other. We even snagged them off on the rough grinder, when they claimed that was the trouble, put them on the rough grinder and snagged them off for the cam lathe. That didn't help it any. Then the dies were cut down, and a smooth forging was made with a very small amount of stock on, but that didn't improve the job any at all. And another thing with regards to that forging, I saw the same trouble last spring down at the Hudson Motor Car, where two Gordon machines, where they made a test on some Hudson shafts, and it

showed just the same thing that we had up here. They sent back 20 they made a test on, and they saved nine out of the twenty at Hudson's. I seen those shafts myself. They cut in on the side of the nose, come up on the nose, just the same as we did on the job up here.

Q. 13. Have you seen one of the Melling machines working on the Hudson job?

By Mr. Dennett: Question objected to as improper rebuttal.

A. Yes, sir.

Q. 14. Was there any difficulty there?

By Mr. Dennett: Question objected to as improper rebuttal.

A. No, sir.

Q. 15. Mr. Gordon asserted that it had been your practice to "Snag" the forgings before putting them in the rough grinder. What have you to say to that assertion? A. No; that wouldn't be necessary. We never snagged them for no rough cam grinding. We never snagged them for the Melling cam lathe, either.

Q. 16. Mr. Gordon also asserted that you are apparently unable to maintain uniform diameters on your work at the points required to be used as steady rest bearings. What was your experience in that regard? A. Well, we had a limit of .005 on there, and we took up the shafts for the Gordon machine. Now a five thousandths limit is loose, and we put on a three thousandths, and tried them, but that didn't help any. That was one thing he claimed, but that didn't make no difference whatever. Another thing, that wouldn't make any difference on the machine, because it would just hold it in or out a little on the steady rest; it would just make the cams smaller or larger, but it hadn't ought to change the size of the same at all.

(XQ. 19, page 293, to and including XQ. 43 and Answer, page 298.)

Cross Examination by Mr. Dennett.

XQ. 19. How many of the Gordon and Redlin machines did the Jackson Motor Shaft Company have while you were foreman of their cam department? A. Two.

XQ. 20. Did either of those two machines ever cut cams on cam shafts while you were the foreman of the cam department of the Jackson Motor Shaft Company? A. They never run steady, not one day that I can remember. They were always down for something.

XQ. 21. Did both of them run at any one time long enough to cut the cams on a single cam shaft? A. Why, there was some shafts we were able to put through. Nearly every shaft that I saw that came off of there, there wasn't a shaft that was perfect. The only way we could get them by was by buffing them. We would buff them and get them by in that way; otherwise, they never went out.

XQ. 22. What do you mean by buffing them? A. Where they cut in on the top of the nose. They would cut in there, and you couldn't get them to clean up after they were finished ground, after they went through the heat treatment.

XQ. 23. What do you mean by finish ground? A. After a cam shaft is turned on this machine, they go to the heat treatment, receive the heat treatment and harden, and then brought back and straightened and finish grind put on them.

XQ. 24. So, so far as the use of these Gordon and Redlin machines was concerned, of the Jackson Motor Shaft Company, while you were foreman of the cam department, they were not intended to be used by you for actually completing to a final finish cams to be used in internal combustion engines or for other purposes? A. Yes, they were. The shafts had to be corrected when they came off from them, and that is why we couldn't use them.

XQ. 25. You misunderstood my question, apparently. You referred to the cams being cut in the Gordon and Redlin machines and then the cam shafts being subjected to a heat treatment or hardening and to a finishing grinding operation after the heat treatment for hardening. The point of my question was simply this; were the cams, which were cut on cam shafts by the Gordon and Redlin machines at the Jackson Motor Shaft Company intended to be used just as they came from these Gordon and Redlin machines without any other operations upon the cams, and by any other operations on the cams, I mean any operations of any kind or character, whether heat treatment, finishing grinding so-called, or otherwise? A. No; they all have to receive heat treatment.

XQ. 26. And after the heat treatment, were they all finished ground, to give them the smooth surfaces around the cams? A. They only allow, for instance, the Maxwell Motor Company—

XQ. 27. (Interrupting) I am only speaking about the Jackson Motor Shaft Company? A. The stock is supposed to be evenly distributed on there. They don't take a shaft that is polished; it is just a little finish grind, and there is a very small amount of stock to come off of there; the case is very thin on there. Were you to grind on there, you would grind through the hard case. That job would leave this heavy stock on some parts of the cam, and then it would grind through the case.

XQ. 28. And by "case," you mean the case hardened surfaces which result from the heat treatment of the cam shafts? A. Yes; by "case" I mean case hardening surface.

XQ. 29. When you referred to the scrap in the Gordon and Redlin machines at the Jackson Motor Shaft Company, you referred to cam shafts that were not acceptable for use in internal combustion engines, or the purpose for which they were intended, as distinguished from any different kind of scrap, did you not? A. Yes. You mean they could not be used?

XQ. 30. Yes. A. Yes; they couldn't be used.

XQ. 31. I show you Melling's Exhibit No. 44, which has been testified to as a scrap cam shaft, and call your attention to the nose on one of the cams, at one end of the shaft, where the end of the nose nearest the end of the shaft has been chipped off. In your opinion, is that Melling's Exhibit No. 44 a piece of scrap, in the same general sense of the definition in which you use the word "scrap" in the cam shafts turned on the Gordon and Redlin machines? A. I am not in the cam shaft business now, and I don't know whether I should answer that question or not.

XQ. 32. You must answer the question as to whether that Melling's Exhibit No. 44 is a scrap cam shaft in the sense that you used the word "scrap" in connection with the cam shafts turned by the Gordon and Redlin machines? A. Yes; this would be a scrap shaft on account of the chip there on the nose, because they don't want them chipped on the nose. They have got to be smooth there, clear across the tops.

XQ. 33. You stated that the percentage of cam shafts turned on the Gordon and Redlin machines at the Jackson Motor Shaft Company's plant was what? A. The percentage of scrap?

XQ. 34. Yes? A. I think it was between twenty and twenty-five for the Gordon cam lathes.

XQ. 35. Do you have any exact figures on that point with you now, by which you could refer to it? A. No. The salvage department kept track of the exact figures on that.

XQ. 36. Then taking the larger percentage, that twenty-five percent, would leave seventy-five percent of the cam shafts turned on the Gordon and Redlin machines at the Jackson Motor Shaft Company's plant as cam shafts that you would not term "scrap." A. Seventy-five percent would not be scrap?

XQ. 37. Yes. A. No. The seventy-five percent would not be termed "scrap," but they cost too much to manufacture, because you had to buff the nose of them. A man had to stand there and buff everyone of those cams on the nose, so it cost too much to operate that way. In addition to the scrap, the seventy-five percent had to be buffed on the nose.

XQ. 38. While you were foreman of the cam department of the Jackson Motor Shaft Company, just what were the processes employed in the cam department in making and completely finishing those cam shafts? A. You mean the different operations?

XQ. 39. Yes, and different tools you used, whatever they were? A. The forging came in out of the yard, was snagged off on both ends, and then centered on both ends, and then it was straightened, received a straightening operation next. After the straightening operation, the center bearing was turned to size. After the center bearing is turned, the next operation is the spacing; all cams were spaced, or the rear end bearing turned. I mean by spacing, a forming tool cuts the side of the cams. After the spacing, the next operation is the turning between the cams, or the barrel of the shaft, and turning the front bearing. The next operation, go to the engine lathes, all bearings are chamfered on the corners. The shaft is cut off for length on both ends, and recessed for grinding operations. After that, the shaft goes to the key-way machine, the next opera-

tion is the shaft is straightened again; after the engine lathe work is done, the shaft is straightened on center to perfectly straight. The next operation is the milling of the key-way in here, to drive the shaft in the cam lathe. The next operation is on the cam lathe.

XQ. 39. Cutting the cams? A. Yes; cutting the cams or turning the cams.

XQ. 40. At the time you were foreman of the cam department of the Jackson Motor Shaft Company and before the Jackson Motor Shaft Company bought those two Gordon and Redlin machines, how were the cams on those cam shafts formed? That is, by what kind of tools or mechanisms, or hand work or anything; the point being in this question, simply to determine how these cams were shaped by the Jackson Motor Shaft Company prior to their acquiring these Gordon and Redlin machines? A. They were rough ground on the grinder; cam grinder.

XQ. 41. And while you were foreman of the cam department of the Jackson Motor Shaft Company, what percentage of scrap on these cam shafts did you have in the cam department from any sources whatever, other than the Gordon and Redlin machines? A. Well, the total output on the other machines would not run two percent, that is, outside of the Gordon machines, the scrap would not run two percent. That means total on low swung engine lathes, and everything.

XQ. 42. And that two percent of scrap would result from what causes, incorrect setting of the work in machines, or springing of the work, or faulty action of the machines? A. A man might make a mistake by setting his tool in, or something like that.

XQ. 43. That is, that two percent would practically represent entirely workmen's error and not machine error? A. Sometimes there would be machine error too; sometimes a man would happen to have a center break with him and he would scrap the shaft.

(RDQ. 44 and Answer, page 299.)

RE-DIRECT EXAMINATION by Mr. Earl.

RDQ. 44. You spoke of the first operation I think as "snagging the ends off the forging." Just what do you mean by that? A. On the forging, as it come in there, smooth them off, so the center could be put in there.

CHARLES GORDON:—

(Q. 56, page 402, to and including Q. 57 and Answer page 403.)

DIRECT EXAMINATION by Mr. Dennett.

Q. 56. Referring to Exhibit No. 18, how many of your machines were sold to the Jackson Motor Shaft Company, of Jackson, Michigan, up to the latest date of the papers in this exhibit, which is Order No. 13,740, dated February 12, 1920? A. Two machines.

Q. 57. Have you or your associates sold to Jackson Motor Shaft Company, of Jackson, Michigan, any of your machines since February 12, 1920? A. No.

(Q. 66, page 405, to and including Q. 74 and Answer, page 409.)

Q. 66. Referring now to your machines which you have sold, and excepting from your answer to this question the machines which you sold to the Jackson Motor Shaft Company, of Jackson, Michigan, have the machines proved satisfactory to the purposes and uses, as far as you know? A. As far as I know, they have.

Q. 67. While your personal appearance was not noted at the taking of Melling's depositions at Jackson, Michigan, you were, as a matter of fact, actually present in person during the taking of those depositions, were you not? A. I was.

Q. 68. You heard some of the witnesses produced on behalf of Melling criticise the machines sold to Jackson Motor Shaft Company, did you not? A. I did.

Q. 69. Before hearing their testimony, which ones of those witnesses had you previously personally known? A. I had met Mr. Schultz, Mr. Steinke and Mr. Weisel and Mr. Melling.

Q. 70. Mr. Schultz testified to the effect, in substance, that those two machines sold to the Jackson Motor Shaft Company were the rottenest machines he ever saw. What have you to say, if anything, in explanation of this testimony of Mr. Schultz? A. Mr. Schultz condemned the first machine we furnished him because certain elements in this machine wore out rapidly. It was admitted by Mr. Schultz and others in his organization, that the wear on the

machine was very largely due to the machine being located in close proximity to the rough cam grinding machines, where the grit from the emery wheels deposited thickly over our entire machine. The wearing points Mr. Schultz complained about did not wear in a like manner on other machines which we have had in operation at other plants. Mr. Schultz did not make allowance for the kind of forgings which were given us to turn in that these forgings had an excessive amount of stock to be removed. In one instance I remember distinctly where there was at points on certain of the cams as much as one-quarter inch of stock to be removed. Mr. Schultz and Mr. Steinke both admitted to me at that time that it had been customary for them to snag these high points off the rough forgings before the shafts went to the rough cam grinder, but they had hoped that with our cam turning machine it would be unnecessary to snag off these high points so that they would, if possible, save this operation. It was arranged with Mr. Schultz and Mr. Steinke, however, that they would, in the future, snag off this high point on the cams until they could have the forging dies resunk so that the forgings would not have this excessive stock which I have just referred to. A great many of the shafts given us to turn on our machine had very unequal amounts of stock to be removed from the cams; in some instances the cams would barely clean up on one side, while it was not uncommon to have from 3/16 inch to ¼ inch stock to be removed on another point. This variation was due to worn dies in some cases and to shafts not being properly straightened in other cases; also due to the fact that the cams on the rough forging did not always time up correctly. With reference to the quality of material and workmanship on the cam machines themselves, I know that neither material or workmanship was everything we would desire. I know that roller pins were improperly carbonized and hardened. This was also true of master cams. I also learned after the machines were delivered to the Jackson Motor Shaft Company that there were numerous deficiencies in workmanship and these errors in the mechanical parts of the machine in some instances reflected on the work turned out by the machines. When the machines were sold to the Jackson Motor Shaft Company, we were given to understand by the Jackson Motor Shaft Company's repre-

sentatives that the amount of stock to be removed would be reasonably uniform and not excessive, and by "not excessive," I mean that it was generally understood that there would not be more than ⅛ inch stock to be removed at any one point on the cams. This point was discussed between myself and Mr. Schultz prior to our receiving an order for these machines, and Mr. Schultz advised me that their forgings were usually very good and uniform, because, as he said, it made a lot of difference with them whether there was an excessive amount of stock or not for their rough grinding operations. Another point which caused us considerable trouble in securing satisfactory results from machines we furnished the Jackson Motor Shaft Company was the apparent inability of the Jackson Motor Shaft Company to maintain uniform diameters of their work at the points which we required to be used as steady-rest bearings. The diameters of these bearings varied as much as 10/1000 of an inch, and it seemed quite difficult for the operators of the machines turning or grinding these bearing points to hold them to a much closer dimension, the reason for this being, as explained to me by Mr. Steinke, that they had not found it necessary to maintain closer dimensions at these particular points when they were rough-grinding the cams instead of turning them.

Q. 71. Have you and your associates built your machines in factories owned or controlled by you? A. Prior to about eighteen months ago we had not built any of our machines in factories either owned or controlled by myself or any of my associates, but in the last eighteen months we have built a number of machines in a factory owned and controlled by some of my associates.

Q. 72. By whom and at what time were those machines built which were sold to the Jackson Motor Shaft Company? A. The machines sold to the Jackson Motor Shaft Company were built by the Eastern Production Company, Detroit, Michigan, and to get the date they were built it would be necessary for me to look up our records, but I might state they were built and immediately delivered to the Jackson Motor Shaft Company.

Q. 73. Did the Eastern Production Company ever build other machines for you than the two machines sold to the Jackson Motor Shaft Company, or did they have orders

from you to build other machines, and if so, state what was the result? A. The Eastern Production Company had a contract with me to build twenty-five cam-turning lathes. They turned over to me four or five of the machines, but they were not all accepted by me on account of both defective material and workmanship.

Q. 74. What has become of those two machines, if you know, which were sold to the Jackson Motor Shaft Company of Jackson, Michigan? A. I have not seen these machines for some time, but I was advised by Mr. Schultz of the Jackson Motor Shaft Company, about three weeks ago, that they were still in the possession of the Jackson Motor Shaft Company.

(XQ. 188, page 441, to and including XQ. 190 and Answer, page 442.)

Cross Examination by Mr. Earl.

XQ. 188. You have mentioned the variations in the forgings turned by the Jackson Motor Shaft Company, stating, as I recall it, that in some instances forgings would barely clean up and in others approximately one-quarter of an inch of stock to be removed. How do these variations compare with these Exhibits 5 and 6? A. The stock to be removed from the cams on Exhibits 5 and 6, while not of uniform amount about the finished cam, is much more uniform than was the case with the shafts I referred to at the Jackson Motor Shaft Company, the difference being that on the shafts at the Jackson Motor Shaft Company the excess material did not develop in a gradual increase or decrease but was more in the nature of abrupt lumps and depressions which made it very difficult for the machine to cut the shafts without abrupt and varying stresses on the shaft.

XQ. 189. Do varying stresses such as you speak of show up in the finished work? A. When we attempted to remove all of the excess metal in one cut, the abrupt variations in the depth of cut left their mark on the finished work. When the amount of stock was reasonably uniform and not excessive, the strain would not be, or would not show on the finished work to any appreciable extent.

XQ. 190. Did you have any knowledge of the Jackson Motor Shaft Company removing the humps or irregulari-

ties of any cam shaft prior to turning or attempting to turn them in the machines? A. I have no personal knowledge to that effect, but I was advised by the employees of the Jackson Motor Shaft Company that it had been customary for them to have an operation of snagging the lumps we complained of off the shafts before they attempted to rough grind them, which was their method of roughing the cams to the shape required prior to the hardening operation.

MASTER'S REPORT IN NATIONAL TUBE CO. v. MARK ET AL.

UNITED STATES CIRCUIT COURT OF APPEALS SIXTH CIRCUIT.

NATIONAL TUBE COMPANY,
Plaintiff-Appellant,
v.
CYRUS MARK, ANSON MARK and CLAYTON MARK, Co-partners and as MARK MANUFACTURING COMPANY,
Defendants-Appellees.
No. 4360.

(Master's Report as shown in the printed record on file in this court.)

"MASTER'S REPORT

(Filed February 29, 1924.)

PROCEEDINGS IN COURT.

This action was brought by the National Tube Company seeking an injunction to restrain The Mark Manufacturing Company from using a machine or apparatus for rifling iron or steel pipes or tubes which National Tube Company claimed infringed a patent known as the Fell Patent owned by plaintiff; and to recover damages for the alleged infringement.

On the hearing of the cause the District Court was of opinion that the rifling apparatus which The Mark Manufacturing Company was using in rifling pipe did not infringe the Fell Patent and refused to enjoin its further use.

The cause being carried to the Circuit Court, that court being of the opinion that the rifling machine, or apparatus, which the defendants were using for rifling pipes did infringe the Fell Patent owned by complainant, reversed the decree of the District Court, enjoined the further use by the defendants of their rifling machine, awarded damages to complainant (amount not determined) and sent its mandate to the District Court to be carried into effect; and ordered an accounting of the damages.

In obedience to the mandate of the Circuit Court the District Court entered its decree (a copy of which is hereto attached for convenience of the court) by which this cause was referred to me as master to report to the court.

a. To take an account of, to ascertain, take and state the number of apparatus for rifling pipes or tubes made, and the number used.

b. The extent of use of such apparatus in the rifling of pipes or tubes.

c. The quantity and size of pipes or tubes rifled with said apparatus.

d. The number of said apparatus sold by the defendants.

e. The number of said apparatus which the defendants have on hand.

f. The gains, profits, savings, and advantages derived by defendants from and through said infringement.

g. To assess the damages suffered by complainant by reason of said infringement.

The order of the court further required the defendants to produce and account, books, statements, vouchers, etc., and to submit to oral examination, etc., and restrained defendants' further use of the infringing apparatus or machine.

PROCEEDINGS BEFORE THE MASTER.

On receipt of the order of reference, I issued an order requiring the defendants to file an account in form of debit and credit showing the manufacture and use by them of infringing machines, as well as the gains, profits and savings by the use of such machines.

On March 11, 1915, the defendants in compliance with the order filed an account, and shortly after amendments and supplements. This account as amended and supplements appears in Volume I, pages 106 to 139, of the printed record herewith filed.

The usual practice in proceedings of this sort seems, from the authorities I have consulted, to be that upon the

filing by the defendant of his account the complainant files such exceptions to the account as he desires, and the hearing proceeds upon the issues presented by the account and the exceptions.

In this cause the complainant filed no formal exceptions to the account, but in the course of the hearing attacked various items and testimony was offered by both complainant and defendants attacking and supporting the account.

No objections being made to such evidence on the ground that no formal exceptions had been filed I allowed the testimony to be taken.

Counsel, on both sides, having proceeded all through the hearing as if formal exceptions had been filed, it is now, in my judgment, too late for either party to object to the evidence offered and taken attacking and supporting the account on the ground of failure to file formal exceptions to the account.

At the beginning of taking testimony, in Columbus, Ohio, the hearing had progressed but a few days when it became evident that a great mass of testimony consisting of books of original entry, contracts, vouchers, etc. would be required. These matters of evidence consisting largely of many books of account of great volume, kept at the offices of the parties and needed there at frequent intervals in the course of their business, it was agreed by counsel, the master consenting, that a recess be had and further testimony taken at the offices of the parties where the books and other items of evidence required might conveniently be accessible.

Under this arrangement many sessions have been held at New York City, Pittsburgh, Pa., Youngstown, Ohio, and Zanesville, Ohio, with frequent recesses to enable accountants to examine books and to make and examine tabulations, schedules and estimates, all which has tended to cause the seeming delay in concluding this investigation.

CONCEDED FACTS.

The complainant, National Tube Company, is a corporation organized under the laws of the State of New Jersey, engaged in the manufacture of steel and iron tubes and pipes.

The defendants are a partnership as The Mark Manufacturing Company operating a plant for the manufacture of pipes and tubes, large and small, and pump supplies at Evanston, Illinois, and a plant engaged mostly in the manufacture of large pipes and tubes, at Zanesville, Ohio.

The National Tube Company is a corporation organized under the laws of the State of Ohio, operating a plant at Lorain, Ohio, for the manufacture of tubes, pipes and other iron and steel products.

National Tube Company, The National Tube Company, National Works, Christy Park Works, Republic Department, Continental Works, Pennsylvania Works, as well as other plants, are conceded (see plaintiff's brief, p. 48), to be subsidiaries of, and owned by, The United States Steel Corporation, although organized and operated, in form, as separate legal entities.

Several of these subsidiary companies had manufacturing plants which were, or with comparatively slight additional equipment could have been able to have filled the order of rifled pipe out of which this controversy arose, had they received the order.

THE 1909 ORDER.

Early in the year 1909, The Southern Pacific Railroad Company was desirous of placing an order for a large amount—approximately one hundred and ninety miles—of eight inch rifled pipe, and in pursuance of that end, entered into correspondence with a number of pipe manufacturers, including plaintiff and defendant, seeking bids for the desired order of pipe.

Following, and doubtless as a result of this correspondence, in March, 1909, National Tube Company bid to manufacture the desired quantity—approximately one hundred and ninety miles of pipe—at 75¢ per lineal foot. (See testimony, Vol. I, pages 145 and 171).

About the same date the Mark Manufacturing Company bid to furnish the order of pipe at 67½¢ per lineal foot. One, or probably two, other manufacturers bid for the order at prices from 70¢ to 76¢ per lineal foot.

The Mark Manufacturing Company was the lowest bidder so far as the evidence shows, and a contract was entered into between that company and the Railroad Com-

pany by which the Mark Manufacturing Company agreed to make and furnish approximately one hundred and ninety miles of eight-inch rifled pipe according to specifications contained in the bids. The contract also provided that the Mark Company were granted, for use in making the pipe stipulated in the order, a license to use the Isaacs & Speed Patent for rifling machines which was then held by the Railroad Company.

The Mark Manufacturing Company constructed for use in rifling pipe to fill the 1909 order, a rifling machine based in part upon the principles evolved from the Isaacs & Speed Patent and in part on principles which the Mark Manufacturing Company claimed were the inventions of its own engineers. This rifling machine so designed and constructed by the Mark Company has been decided by the Circuit Court to have been an infringement upon the Fell Patent owned by National Tube Company.

ANSWERS TO QUESTIONS REFERRED.

I now take up and endeavor to answer as best I may from the testimony offered the questions referred to me by the decree of the court.

a. State the number of apparatus for rifling pipes or tubes made and used.

The Mark Manufacturing Company built one rifling machine, being the rifling machine found to infringe the Fell patent. This machine was used for the entire one hundred and eighty-four miles of eight-inch pipe made under the April, 1909, order for The Southern Pacific Railroad Company.

The testimony shows that this apparatus, or machine, has not been used except for that order of pipe, and that the Mark Company have constructed no other similar machine.

b. The extent of use of such apparatus in the rifling of pipes or tubes.

With the rifling apparatus, or machine, mentioned in the answer to paragraph "a" above, constructed by the defendants, they rifled in April, 1909, to January, 1910, inclusive, one hundred and eighty-four lineal miles of eight-inch pipe; all rifled for The Southern Pacific Railroad

Company under the contract between it and The Mark Manufacturing Company, referred to in the record as the "1909 Order."

c. The quantity and size of pipes or tubes rifled with said apparatus.

With the apparatus or machine mentioned in preceding answers, The Mark Manufacturing Company rifled one hundred and eighty-four miles, lineal measure, of eight-inch pipe. No other pipe was rifled with the machine.

d. The number of such apparatus sold by the defendants.

The defendants sold no machine or apparatus for rifling pipes.

e. The number of said apparatus which the defendants have on hand.

The evidence clearly shows that the defendants made but the one infringing machine or apparatus. This machine was operated in the years 1909 and the month of January, 1910, in rifling one order of pipe for The Southern Pacific Railroad Company, and has not since been operated. No testimony has been offered to show, and I am, therefore, unable to report, what became of the machine beyond the fact, undisputed, that in January, 1910, it was in the possession of the defendants.

f. The gains, profits, savings and advantages derived by defendants through said infringement.

To arrive at an answer to this paragraph it seems best to subdivide it and to consider the several elements separately. I then consider, first:

GAINS AND PROFITS.

Amended Sheet No. 16 (See Testimony, Vol. I, page 106) purports to show the cost of production of eight inch rifled pipe manufactured for the Associated Pipe Line Company, Southern Pacific Railroad Company, under the 1909 order to have been $679,067.34.

Sheet No. 15 (Testimony Vol. I, page 134), shows the total amount charged to the Associated Pipe Line under the 1909 order to have been $677,202.20.

Sheet No. 17 (Testimony Vol. K, page 137), shows the amount received by the Mark Company from Associated

Pipe Lines for eight inch rifled pipes under the 1909 order to have been the same as that charged, viz: $677,202.20.

These amounts seem to indicate a net loss to the Mark Company of $1,865.26 on the 1909 order.

The Mark Company in 1909 operated two plants, one at Evanston, Illinois, engaged in the manufacture of pipe—large and small—and a large number of small articles designated in the testimony as "Pump supplies," and one at Zanesville, Ohio, engaged in the manufacture of large pipe. The Mark Company in distributing its overhead charged the pump supply business, arbitrarily, 5% of the sales from the business, the remaining 95% of the overhead was charged to the pipe production of the two plants in the proportion to the pipe production of each. Extended cross examination failed to elicit any reason for this method of apportioning the overhead save that this method was the Mark Company's usual way of apportioning the overhead.

It is apparent from the testimony that the overhead expense of the pump supply business was proportionately fully as great as that of the pipe business, and in fairness should have been an equal proportion of the overhead.

The value of the total production of the Zanesville plant for 1909 (See Testimony Vol. 1, p. 44) was		$3,024,557.27
The value of the total production of the Evanston plant for 1909 (See Testimony Vol. I, pp. 47 and 48) was:		
Pipe	$2,299,735.23	
Pump Supplies	494,029.98	
Total		2,793,765.21
Total production of the two plants		$5,818,322.48
The overhead charged by the Mark Company was as follows (Vol. I, p. 50):		
Zanesville Pipe	$230,730.98	
Evanston Pipe	105,223.86	
Evanston well supply ..	24,701.50	
Total	$360,656.34	

No fact has been shown to justify charging the pump or well supply business with a smaller percentage of the overhead expense than the pipe business.

Had the overhead been apportioned to the pump supply business and to the pipe business, as seems to be fair, the gain to the 1909 order would approximately equal the apparent loss of the Mark Company.

I, therefore, find, and so report, that the Mark Manufacturing Company suffered no loss, and gained no profit on the March, 1909 order for rifled pipe.

SAVINGS.

The undisputed evidence shows that, in the manufacture of rifled pipe to fill the 1909 order, the Mark Manufacturing Company had the right under its contract to use the Isaacs & Speed rifling machine. This machine at that time had not been used in rifling hot pipe and had not proved satisfactory in rifling cold pipe. For this reason, or other reasons not disclosed by the evidence, the Mark Company designed and constructed the rifling machine which it used in rifling pipe to fill the March, 1909 order, being the same rifling machine which the Court of Appeals has found to infringe the Fell Patent owned by the plaintiff.

The Plaintiff insists that by the use of the infringing machine the Mark Company effected a great saving in manufacturing costs, in this part the Fell rifling machine, and the infringing machine could rifle pipe much more rapidly than the Isaacs & Speed machine, thereby effecting a great saving of time and labor in rifling pipe; that the Fell machine which defendants' machine infringed, could rifle the minimum output of the style of furnace then in general use, viz, twenty pieces of eight inch pipe per hour, while to rifle the same number of pipes per hour would require four Isaacs & Speed machines.

In support of this contention plaintiff called, as experts, two witnesses, Charles Fell and Charles H. Pinkney (see testimony Vol. I, pages 315 to 345).

The plaintiff claims, basing its claim on the testimony of these experts (see plaintiff's brief, page 12), that the Mark Company by using the infringing machine made a savings in producing rifled pipe for the March 1909 order of $98,250.00.

The claim of these expert witnesses is fairly stated by one of them, Mr. Fell, in his testimony at Vol. I, page 317, of the testimony.

"Question 15: In estimate No. 1, referring to hot rifling you have provided four Isaacs & Speed machines in comparison with one Fell machine. Is that right?

Answer: It is.

Question 16: Why did you make this difference in the number of machines for the two cases?

Answer: Because the Isaacs & Speed machine would be very much slower. We estimated that the mill making twenty pieces of eight-inch pipe per hour, it would take four of the Isaacs & Speed machines to keep with the mills to do the rifling. With the Fell machine, from actual experience, it has rifled over 600 pieces in ten hours, or 60 pieces an hour.

Question 17: The mill you refer to is the equipment for making and supplying the pipe to the rifling machine, and why did you assume 20 pieces of 8 inch pipe an hour, is that an ordinary mill production?

Answer: That is about the minimum production for one of the old fashioned mills."

Clearly, the saving estimated by these two expert witnesses was to be derived from the fact, as they evidently believed it to be, that one Fell rifling machine could rifle the pipe, hot as it came from the mill, as fast as it would come from the ordinary "old fashioned mill" in use at that time (1909) while four Isaacs & Speed machines would be required to do the same work.

If it be true, as the expert witnesses Fell and Pinkney testified, that one Fell rifling machine could rifle the pipe as rapidly as it was produced by the mill, and that four Isaacs & Speed were required to do the same work, it logically follows that, had the Mark Company used the Isaacs & Speed machine in producing the 1909 order of rifled pipe, they would have been obliged to use one rifling machine with consequent loss of time by reason of the inability of the machine to rifle the pipe as fast as it came from the mill, or to have installed four Isaacs & Speed machines. To have used only one machine would have resulted in great loss of time. To have used four machines would have necessitated the installation of four expensive machines.

On October 15, 1919, in the presence of counsel and the master, at the Mark Company's Zanesville plant, a demonstration was had of the actual work of the Isaacs & Speed rifling machine (see testimony Vol. II, pages 36 *et seq.*).

The Isaacs & Speed machines used at that time had been constructed after this action for infringement was brought, to be used in rifling pipe for the Southern Pacific (March, 1909) order in the event that the further use of the rifling machine (the infringing machine) which the Mark Company was then using should be enjoined (see testimony Vol. II, page 53).

This practical demonstration of the actual working of the Isaacs & Speed rifling machine was made in the Mark Company's plant, the same plant in which the infringing machine was used, was so far as I could observe, fairly conducted and was not challenged by counsel.

At this demonstration the Isaacs & Speed machine rifled pipe, hot, as fast as they came from the mill. I took the time of several pipes as they came through the rifling machine in from fifty-seven to sixty-five seconds each.

If Fell and Pinkney's estimate of a production by "old fashioned" mills used in 1909, of twenty pieces of pipe per hour, be correct, it follows, as the demonstration clearly showed, the rifling capacity of one Isaacs & Speed rifling machine was more than double the capacity of the pipe mill to produce.

Fell and Pinkney's estimate of saving by use of the infringing machine was based on the hypothesis that one Fell machine could rifle twenty pieces of pipe per hour and that one Isaacs & Speed machine could rifle but five per hour. The demonstration, the fairness of which has not been controverted, of the Isaacs & Speed machine having demonstrated that it would rifle the pipe much more rapidly than Fell and Pinkney's estimate of twenty pieces per hour, it follows, and I so find and report, that the Mark Manufacturing Company effected no saving by the use of the infringing rifling machine.

ADVANTAGES DERIVED BY DEFENDANTS FROM AND THROUGH SAID INFRINGEMENT.

I am unable to find that the defendants derived any advantage from and through the use of the infringing rifling machine. I, therefore, find and report that defendants derived no advantages from and through said infringement.

g. To Assess the Damages Suffered by Complainants by Reason of Said Infringement.

Plaintiff's counsel at pages 1 and 2 of his brief states plaintiff's claims to recover damages and profits under appropriate headings. I shall consider these claims in their order as stated by plaintiff's counsel.

(1) Defendants' actual profits.

This question is, I think, fully covered at pages 10, 11 and 12 above and need not be further considered here.

(2) Defendants' saving by the use of the infringing machine as compared with that of Isaacs & Speed, which was the only alternative.

This subject has, I think, been fully covered at pages 12 to 16, inclusive, above. I need only add here that the evidence shows that there were in existence in 1909 two patents for machines for rifling pipes or tubes, viz., the Fell patent owned by the plaintiff, and the Isaacs & Speed patent for the use of which defendants held a license.

I do not recall, nor do I find in the printed record, proof that there were no other rifling machines. If other machines were in existence, defendants doubtless had the alternative to use them if not covered by patents, or if patented, to have negotiated with the owners for licenses to use them.

(3) Plaintiff's damages by reason of loss of profits which it would have made but for the infringement.

This claim is based on the testimony of Mr. Bolton C. Moise, auditor of plaintiff company, supported in minor details by other witnesses. Mr. Moise based his testimony upon his knowledge and experience as cost accountant and upon plaintiff's cost records of a large order for eight-inch rifled pipe which his company received and filled in the

latter part of the year 1909, at which time Mr. Moise tells us manufacturing conditions, prices of materials and cost of labor did not materially differ from those prevailing in March, 1909.

In support of his testimony Mr. Moise submitted numerous extensive tabulations collated from The National Tube Company's cost records of the order taken and filled in the latter part of the year 1909.

Mr. Moise testifies that if his company had received the March, 1909, order, taken by defendants, the pipe covered by that order would not have been manufactured by National Tube Company, the plaintiff here, and a bidder for the March, 1909, order, but would have been manufactured by an affiliated company, The National Tube Company of Ohio.

This company, the National Tube Company, Mr. Moise tells us, could have filled the order in question beginning with the iron ore, charcoal and other raw material, and carrying them through the successive stages of pig iron, ingots, slabs, plates, skelp, plain pipes or tubes, rifled pipes, and lastly, finishing the rifled pipes by evening up and threading the ends so that the several pieces could be connected to form, in effect, one continuous pipe line for conveying oil between different points.

Plaintiff claims the damages by loss of profits on the 1909 order, calculating from ore to finished product, would have been $353,245.00 (see plaintiff's brief, page 33). Objection was made to this testimony and counsel not being ready to present arguments and authorities, the testimony was taken subject to exception.

As appears above, in the manufacture of finished rifled pipe from the ore to the finished product, there are eight distinct separate processes: (1) manufacture of pig iron; (2) manufacture of steel ingots; (3) manufacture of slabs; (4) manufacture of plates; (5) manufacture of skelp; (6) manufacture of plain tubes or pipes, unfinished, and ready to go to the rifling machine or to be finished for use as plain pipe as may be desired; (7) rifling the unfinished plain pipe; (8) finishing the rifled, or plain, pipe by evening and cutting threads at the ends of the pipes so that they may be coupled together to form continuous lines of pipe.

The first four of the processes enumerated each produces a complete finished commodity, bought and sold in

the markets and listed for each. In each case the process of manufacture is the same whether the finished product is intended ultimately to be used in the manufacture of pipe or for the manufacture of any other of the innumerable products of iron or steel. The fifth and sixth processes are the same whether the final product is to be rifled, or plain, pipe; and the eighth or final process is practically the same for rifled and plain pipe.

In only one, the seventh, of the enumerated stages is the rifling machine used. It follows that only in that single process was the infringing machine used. The pig iron, ingots, slabs, plates, skelp, and even the plain pipe which would have been required to fill the 1909 order might all have been manufactured by plaintiff and sold by it in the market, presumably at a profit on each regardless of whether the plaintiff did or did not receive that order.

It follows to my mind, that this testimony showing in a lump sum the estimated profit of $353,245.00, for the entire manufacture from ore, through the successive stages, in only one of which the infringing machine was, or could be, used, to the finished product, is incompetent and cannot be considered for the purpose of showing the profits which plaintiff would have gained but for the infringement. It must be borne in mind that at no stage of the manufacture, save the seventh, was the infringing machine used, and the evidence furnishes no means of determining what portion of the estimated profit of $353,245.00 is derived from the rifling process.

Hence, I am forced to the conclusion that plaintiff has failed to prove any loss of profits by reason of the infringement.

Plaintiff also claims a profit (see Plaintiff's Brief, page 33) which it claims it would have gained on eight and one-half miles of plain pipe sold by the Mark Company to the Southern Pacific Railroad Company. The plaintiff did not bid for this order, neither does it appear that the order for rifling pipe was in any way dependent on the order for plain pipe. No rifling machine was used in the production of the plain pipe. I see no support for, and therefore cannot allow, this claim.

The defendant claims that there should be no award in favor of the plaintiff and supports his claim by an in-

genious, but, I think, fallacious line of argument, because he says, (1) it is not shown that plaintiff would have received the 1909 order even had the Mark Company not received or even bid for the order. It is true that had defendant not secured this order, plaintiff might also have failed to secure it. The Southern Pacific Company, if it had not received the lower bid of the Mark Company, might have accepted some other bid or might have abandoned its purpose of using rifled pipe; as to this we can only guess. The fact remains, the Mark Company did receive the 1909 order and in the manufacture of pipe to fill the order did use the infringing rifling machine. The decree of the Appell*ant* Court has established the infringement and awarded damages for the infringement. This seems to me to leave nothing for the master here but to ascertain and report the amount of the damage which he thinks under the facts should be awarded.

Defendant claims no damages should be awarded plaintiff because (2) even had plaintiff received the 1909 order The National Tube Company of Ohio would have made the pipe to fill the order and The National Tube Company would not have received the profit.

Mr. Moise did give testimony tending to show that had The National Tube Company, a subsidiary of The United States Steel Company, received that order, another subsidiary company, The National Tube Company of Ohio, would probably have made the pipe required to fill the order and that National Tube Company would not have received, directly, any part of the profit of the work.

The fallacy of defendant's argument lies in the fact, as it appears to me, that it is no concern of the defendant, that plaintiff, had it received the 1909 order, might have elected to have the actual work of making the pipe done by its fellow subsidiary, The National Tube Company. Neither does it concern defendants that National Tube Company, instead of distributing the profits of the work in form of dividends of National Tube Company might have turned the profit into the treasury of The United States Steel Company, to be ultimately distributed in form of dividends on United States Steel Company stocks.

The Mark Company has infringed plaintiff's patent and must pay the damage for its infringement no matter

what disposition the owner of the patent, National Tube Company, may or might have elected to make of the sum received as profits had it received and filled the order.

LICENSE.

The plaintiff called as a witness Mr. Fraser, an attorney experienced in patent litigation and the determination of royalties and license fees to be paid for rights to use or vend patented articles as well as in determining damages to be paid for infringements of patents, as well as being familiar with the reported decisions of the courts in such matters.

A hypothetical question put to this witness (see Testimony, Vol. I, pages 351 *et seq.*) assumes the main facts as to the manufacture of rifled pipe for which plaintiff contends. Among other things the question assumes in substance that the Isaacs & Speed machine had not, in 1909, been used in rifling hot pipe, and that in rifling cold pipe it spoiled a portion of the pipe and operated very slowly; that the Fell machine obviated this difficulty; that plaintiff's bid for making the order of pipe was seventy-five cents per foot; that defendants underbid plaintiff and secured the order; that defendants for the order in question had a right to use the Isaacs & Speed machine, but instead built and used a machine which had been adjudicated to infringe plaintiff's patent; that plaintiff, had it received the order, could have made the pipe, from ore to finished pipe at a profit of $364,763.00; or from skelp to finished pipe of $230,725.00 or $249,222.00; that defendants, had they used the Isaacs & Speed machine, would have increased its cost of production in the sum of $137,513.00.

Upon these assumed facts the witness was asked to give his opinion as to what would have been a fair and reasonable license fee to have been paid plaintiff by defendant for the privilege of using such machine in the manufacture of pipe to fill the order in question.

To this question defendants objected. There being testimony tending to support the assumptions of the hypothetical question, I overruled the objection, to which ruling the defendants excepted.

Answering the question the witness gave as his opinion that upon the facts stated in the hypothetical question

$110,000.00 would have been a fair license fee to have been paid by the defendants to plaintiff as a reasonable license fee for use of the Fell patented machine in producing rifled pipe for the 1909 order, and that if a reasonable license fee is to be considered as a basis for determination of the damages to be awarded for the infringement, the damages would be $110,000.00. (See Testimony, Vol. I, pages 361 to 368.)

The witness also stated in cross examination that if estimated profits and savings assumed in the question were reduced below the amounts stated in the question, his estimate of a reasonable license and damages for infringement would be correspondingly reduced.

If I am right in the opinion that plaintiff's estimate of the profit it might have made had it received the 1909 order, in so far as it consists of profits on processes of manufacture of completed marketable articles in the manufacture of which the infringing machine had no part (see page 18 *sup.*); and that as a matter of fact defendants made no substantial actual saving by using the infringing machine (see page 12 *sup.*); then this witness's estimate of a reasonable license fee and of damages would be greatly reduced.

The defendants called as witnesses on the question of a reasonable license fee, two witnesses, Mr. Edwards and Mr. Reynders, both men of experience in adjustment of license fees for use of patented machines of various sorts. (See Testimony, Vol. II, pages 101 *et seq.*)

Mr. Edwards was asked whether he considered Mr. Fraser's estimate of $110,000.00 damages, assuming that use of the infringing machine effected a saving of $137,513.00, reasonable, and answered that he did not consider that a reasonable royalty.

Mr. Reynders (see Testimony, Vol. II, pages 108-117) believed that, assuming savings resulting from use of infringing machine instead of the Isaacs & Speed machine which defendants had a license to use, amounted to $137,513.00, a reasonable royalty would be 25% of the saving, or $34,378.25.

SPECIAL DAMAGES.

Plaintiff asks (see Plaintiff's brief, page 39) that any amount awarded as damages be tripled.

If the evidence clearly showed that the defendants were guilty of a deliberate and intentional appropriation of the form or underlying principles of plaintiff's patented rifling device, no court would, or should, hesitate to inflict the extreme penalty.

In this case the evidence fails to show an intention on the part of the defendants to infringe plaintiff's patent. Having in mind that, after a full and exhaustive hearing, one court believed defendant's rifling machine did not and another court believed that it did infringe, it seems easy to believe that defendants in designing and constructing their rifling machine may very likely have believed in good faith, that they were not infringing plaintiff's patented rifling device.

The fact remains, however, as established by the decree of the Court of Appeals, that the defendants, whether intentionally or through mistaken judgment the evidence does not show, did infringe the Fell patent. In that situation the plaintiff, if it believed the Fell patent to be of real value and desired to preserve to itself the benefit of that value, was obliged to protect that patent against this infringement and others that might be expected to follow if no action were brought on this, by bringing this suit, and to incur annoyance and expense of this litigation.

The infringement by the defendants having made this suit necessary, it seems to me fair and right that the plaintiff's costs and expenses in preparation and prosecution of this suit should be taken into account in fixing the amount to be awarded the plaintiff as damages. The amount of such cost and expense is, of course, not shown in the evidence. From the volume of the record and the time consumed I think it safe to say that an award of $15,000.00 to cover costs and expense of this litigation would not be too great.

I, therefore, report and recommend that to the amount hereinafter to be reported as damages for infringement there be added the sum of $15,000.00.

DAMAGES.

The decree of the court having established the fact of infringement and plaintiff's right to recover damages for that infringement, it remains for me to find from the evidence adduced, and to report to the court, the amount which in my judgment should be awarded.

As appears above we cannot determine from the evidence whether or not plaintiff would have received the 1909 order for pipe had defendants not gotten it.

The estimate offered by plaintiff of the profit plaintiff believes it could have gained had it received that order being based on many separate and distinct manufacturing processes from ore to finished rifled pipe, each resulting in a finished marketable commodity, and in but one of which was, or could, the infringing machine be used, and no means furnished by which to determine how much of that estimated profit would have accrued from the rifling process, it seems impossible to determine from the evidence offered, what profit plaintiff would have gained in rifling pipe for the 1909 order if it had received and filled that order.

As also appears (see page 12 *sup.*) the alleged saving to defendants by the use of the infringing machine is not established by the evidence. The plaintiff claims, basing its claim on the opinion of the experts, contradicted by physical demonstration of actual working of the Isaacs & Speed machine, that this saving amounted to $137,513.00.

The defendants on the other hand claim they made no profit on the 1909 order; and further, basing their claim on what they claim they now know, but did not know in 1909, of the working of the Isaacs & Speed machine working on hot pipe, that it could and would rifle pipe equally as well and rapidly as the Fell or the infringing machine, and that therefore they made no saving by the use of the infringing machine.

Being unable to determine from profits, not shown to have been realized by defendants, on the 1909 order; the plaintiff's claim of profits it estimates but fails to prove it could have made on that order had it gotten the order; and the failure of the evidence to establish actual saving to defendants by use of the infringing machine, the only means remaining for determining the damages which

ought to be awarded for the infringement occur to me to be a consideration of the facts as they are shown to have been in 1909, and from these facts to determine what award is fair.

With this thought in mind I recall the facts as the evidence shows them to have been at the time of the infringement (1909).

The Mark Company had bid for and received the order in question for one hundred and eighty-four miles of eight-inch rifled pipe at a contract price aggregating for the entire order $677,202.20.

The contract for the manufacture of this pipe carried with it a license to use the Isaacs & Speed patented rifling machine for rifling the pipe required to fill the order.

The plaintiff had bid for the 1909 order of pipe, but not being the low bidder had not received the order.

The minimum capacity of the Mark Company's pipe mill then in use was twenty pieces of eight-inch pipe per hour.

For economical production the pipe must be rifled as rapidly as they came from the mill—otherwise the mill could not be operated to full capacity with resultant partial idleness of the mill for a portion of the time, and consequent loss of time and labor.

The Isaacs and Speed machine, at that time, had not been used in rifling hot pipe, and in rifling cold pipe had not been a success, being slow in operation and spoiling a considerable percentage of the pipe rifled.

National Tube Company held a patent for a rifling machine (the Fell patent), which could rifle the pipe hot as rapidly as the Mark Company's mill could produce it.

It is safe to assume that in bidding on an order of the magnitude of the 1909 order the Mark Company made careful estimates of the cost of production of the pipe required to fill the order and expected to reap a fair profit in filling the order at the price bid.

The Mark Company in that situation had before it three alternatives:

First: It might negotiate with the plaintiff, National Tube Company, for a license to use the Fell patent, which had proved in actual production capable of rifling pipe, hot, as rapidly as the Mark Company's mill could produce it.

Second: It might use an Isaacs & Speed rifling machine which at that time had only been used in rifling cold pipe, or,

Third: It might, as it did, try to design and construct a rifling machine capable of meeting its requirements and not infringing the Fell patent.

In considering the second alternative the Mark Company were confronted with the fact that the Isaacs & Speed machine had not then been used in rifling hot pipe, and that on cold pipe it could rifle but five pieces per hour, while the minimum capacity of the company's mill was twenty pieces per hour. It must also have been considered that if the Isaacs & Speed on actual trial should fail to rifle hot pipe more rapidly than cold pipe, four machines, at a cost of approximately $25,000.00 would be required to rifle to the capacity of the mill, as well as the fact that for the most economical production the pipe must be rifled as rapidly as the mill could produce. It must also have been considered that the Isaacs & Speed machine in rifling cold pipe spoiled a percentage of the pipe and might do the same with hot pipe.

The Mark Company, doubtless, after consideration of all these and perhaps other facts, chose the third alternative, i.e., designed, constructed and used a rifling machine which the court has decreed infringes the Fell patent.

Had the Mark Company known the rifling machine it designed and constructed was an infringement upon the Fell patent, we may safely assume that as a law-abiding citizen it would have refrained from using that machine. Its only alternative would have been to use the Isaacs & Speed machine whose operation on cold pipe was impracticable, and on hot pipe an untested problem, or to purchase a license to use the Fell machine. What, under those circumstances, would have been a fair and reasonable license fee to have been paid by the defendant to the plaintiff for a license to use plaintiff's patented machine in making pipe for the 1909 order, bearing in mind the fact that the Mark Company had the 1909 order with the anticipation of a profit and the further fact that National Tube did not have the order and could expect no profit from that order unless through a possible sale to the Mark Com-

pany of a license to use the Fell patent in producing pipe to fill the order.

Had the Mark Company then had the knowledge of the efficiency of the Isaacs & Speed machine working on hot pipe which it now has, it would naturally have refused to pay anything for such a license.

But taking the facts as known in 1909, the time of the infringement, with the uncertainty as to whether the Isaacs & Speed machine would rifle hot pipe, and if it would rifle hot pipe, whether it would prove efficient and its use practical, I am of the opinion that a reasonable license fee for the Mark Company to have paid and The National Tube Company to have accepted as a license fee for use of a Fell patent rifling machine would have been the sum of twenty-five thousand dollars ($25,000.00).

If this sum was a fair license fee at the time of the infringement, it seems to me to be a fair and reasonable amount to be awarded as damages for the infringement.

INTEREST ON THE AWARD.

Plaintiff in his brief contends that interest should be allowed on the amount of the award from the date of the infringement. The claim for damages being unliquidated, the well-known rule, in my opinion, applies, and no interest should be allowed.

In conclusion, I find and report to the court that the fair and reasonable damage which the plaintiff has suffered and for which it should be awarded judgment against the defendants is the sum of twenty-five thousand dollars ($25,000.00) with an additional allowance awarded to cover costs and expenses of this action estimated to be fifteen thousand dollars ($15,000.00), and amounting in all to the sum of forty thousand dollars ($40,000.00).

Respectfully submitted,

IRA H. CRUM, *Master.*"

(Clerk's Certificate omitted.)

OPINION ON EXCEPTIONS TO MASTER'S REPORT IN NATIONAL TUBE CO. v. MARK ET AL.

UNITED STATES CIRCUIT COURT OF APPEALS
SIXTH CIRCUIT.

NATIONAL TUBE COMPANY,
Plaintiff-Appellant,
v.
CYRUS MARK, ANSON MARK AND CLAYTON MARK, Co-partners and as MARK MANUFACTURING COMPANY,
Defendants-Appellees.
No. 4360.

(Opinion on Exceptions to Master's Report, filed August 20, 1924, as taken from the printed record on file in this court.)

OPINION ON EXCEPTIONS TO MASTER'S REPORT.

(Filed August 20, 1924.)

SATER, District Judge:

The defendant built and used but one infringing machine. It rifled with such machine 184 miles of eight-inch pipe. It did not use or sell the machine, or any pipe rifled by it, or any apparatus for rifling pipe, after the completion of its contract with The Southern Pacific Railroad Company.

The Master allowed plaintiff "as a reasonable license fee" the sum of $25,000. I interpret the term "reasonable license fee" to mean no more and no less than a reasonable royalty. If recovery be based on that ground, should the plaintiff have interest on the amount thus allowed from the date the infringement ceased, or merely from the date of the Master's report? Where a recovery is determined on a royalty basis, interest is computed from the date the infringement ceased. *K. W. Ignition Co. v. Temco Elec. Motor Co.*, 283 Fed., 873, C. C. A. 6; *B. F. Goodrich Rubber*

Co. v. Consolidated Rubber Tire Co., 251 Fed. 617, 624, C. C. A. 7; *Clark & Schieble Toy & Novelty Co.*, 248 Fed., 276, 283, C. C. A. 6. In the *Clark* case, Judge Warrington, speaking for the court, alludes to the fact that the terms "damage" or "compensation" are frequently spoken of as "reasonable royalty." Interest was allowed from the close of the infringing period. He was dealing with a case in which the defendant's conduct was of a "tortious character." In his earlier consideration of Clark's conduct (217 Fed., 763), he found that Clark claimed he should have the benefit of the infringed patent and also the money received from its sale, and at pp. 771 and 772 the purport of his language is that Clark could not be permitted "both to sell and keep his invention."

Where the recovery is of profits and the circumstances of infringement betray fraud or wantonness, interest may be allowed on profits awarded. *National Folding Box & Paper Co. v. Dayton Paper Novelty Co.*, 97 Fed., 331, C. C. A. 6; *Oehring v. Fox Typewriter Co.*, 251 Fed. 584, 588, C. C. A. 2; *B. F. Goodrich Rubber Co. v. Consolidated Rubber Tire Co.*, 251 Fed. 617, C. C. A. 7. Note also Judge Warrington's language in the *Clark* case. There is nothing in the record or in the decision of our Appellate Court (216 Fed., 507) to indicate wantonness or fraud in the defendant's infringement, or that the defendant "started out not to patent an invention," but "to invent a patent," as was held in the *K. W. Ignition Company* case. It follows that no ground for the award of punitive damages exists. As reflecting on the absence of wantonness or fraud is the fact that after the Fell patent had issued on May 26, 1908, the plaintiff, on March 30, 1909, and September 17, 1909, when negotiating with Thorne, as director of purchases for the railroad company, stipulated that Thorne was to take care of any royalty on the rifling process and furnish plaintiff with the necessary license for the manufacture of pipe. See Vol. I, Record, before the Master, pp. 158, 162. It is not likely that such a demand would have been made if plaintiff was sure the Fell patent was non-infringing and valid.

The Master found the defendant made no profit on its contract with the railroad company. No exceptions were taken by plaintiff to that finding. It is true, plaintiff thinks defendant made a profit of $11,000, while the de-

fendant claims a loss of $4,000; but after stating its belief, the plaintiff adds (Brief, p. 2), "the amount involved is too small to consider seriously." The question of profit, if any was made, is dismissed from consideration, and the Master's report on that subject is sustained.

The plaintiff's claim that it is entitled to damages for the aggregate profits it would have made on each of the several steps of conversion, beginning with the ore and ending with the rifled pipe, is extravagant and untenable. Pig iron, steel ingots, slabs, plates, skelp and plain pipe are each merchantable commodities, produced in great quantities by many concerns and sold on the market as separate articles to persons needing them. The plaintiff holds no monopoly on the production of any of them, nor does the Fell patent allude to or mention any of the products of ore preceding the manufactured pipe, or specify that to produce the desired patented result their production by continuous steps is a necessary part of or has anything to do with his invention. He states that "the invention has relation to means for forming grooves or rifles in pipes or tubes." His process begins with the completed pipes or tubes, as appears from his several claims, and the portion of his specification commonly called the description. His invention is entitled "Apparatus for rifling pipes or tubes," and is restricted to the rifling process. The patent does not require that the pipe shall be rifled while still hot from the process involved in their manufacture. That is to say, it does not require that the rifling shall immediately succeed or be continuous of the manufacturing process and while the pipe is still hot. He contemplated the application of his apparatus to either hot or cold pipe, as the user elected, for he says, "the pipe or tube, preferably while heated, is passed between these rolls," etc. The whole value of the rifled pipe is not contributed by Fell's invention. Whether damages or profits be considered (and the latter is out of the case), the principle announced in *Hemolin Co. v. Harway Dyewood & Extract Mfg. Co.*, 166 Fed. 434, C. C. A. 2, applies. The plaintiff's recovery, on whatever ground placed and whatever the amount may be, must be restricted to the defendant's use of the rifling process. It is worthy of note that not only the defendant, but the Youngstown Sheet & Tube

Company, bid for plain pipe at sixty-four and sixty-six cents per foot respectively.

The Isaacs & Speed patented device was first operated in the field on cold pipe. The opportunity for its first practical testing did not arise when it would be used in a factory on hot pipe when and as produced. There is nothing, however, to be found within the terms of the patent which even remotely suggests that their machine was to be used or could be used only on cold pipe. It says nothing about either hot or cold pipe. They evidently knew it could be used, or at least contemplated its use, in connection with hot pipe. See original transcript, 190. They were not called upon to describe every use to which their invention might be put. If they disclosed its use in one environment, or if its use therein was apparent, its use in another and different environment was and is permissible so long as the change requires no inventive skill. It is not material that the patentees did not describe in full all the beneficial functions to be performed by the parts of their device, if those functions are evident in its practical operation and are seen to contribute to the success of such device. They were and are entitled to all the beneficial uses of their patent, whether they knew of them or not, so long as those uses fall within its terms. As early as January 31, 1907 (and that was before Fell's application for his patent was filed), the railroad company was specifying for the rifling of pipe when hot. Original transcript, 197, 198. Even at an earlier date (December, 1906), a like specification was made. Original transcript 201, 202. The record shows that persons acquainted with the rifling of pipe and with rifled pipe, as known on such dates, recognized that pipe could be rifled hot, knowledge of which fact was brought to plaintiff. Knowledge that such could be done, it would seem, must have been gotten from consideration of the Isaacs & Speed patent, which was the only one extant on such dates. Bentley, it is true, said (Original Transcript, 120) Fell devised the first machine that would rifle hot pipe, but he also said (p. 116) that the necessity of limiting the operation of the Isaacs & Speed patent to cold pipe was a mere possibility. That pipe could be rifled when hot by modifications which were within and not a departure from the terms of the Isaacs & Speed

patent appears not only from the foregoing, but to have been provided by the machine made by the defendant at its factory, to be used in case the decision went against it in this court. There is nothing in the Isaacs & Speed patent that suggests the pipe must be pulled onward in its course by a rope, or by other specific device, and it was not beyond the terms of their patent to adopt means for shoving the pipe along; nor is it of importance that the defendants used a less number of rollers than the four shown and suggested in the Isaacs & Speed patent, for that patent specifically states the number of rollers may be greater or less than mentioned therein. Whether it was, as plaintiff asserts, "a half-and-half machine (half Fell and half Isaacs & Speed)," or whether it was a legitimately commercialized form of the Isaacs & Speed machine, is immaterial, for the reason it is not such or claimed to be such, under the circumstances of this case, as infringes anyone's rights. The thought of rifling pipe when cold in the performance of their contract does not ever appear to have been in the minds of the defendants. If it be true, as claimed, that twelve per cent of the pipe rifled when cold was spoiled, it is not to be presumed that the defendants would adopt the process of thus rifling it. In view of the fact that their bid for the unrifled pipe was sixty-four cents per foot, and but three and one-half cents per foot for rifling, the loss of twelve per cent of the pipe valued at sixty-four cents per foot would be prohibitive of rifling it when cold, and, as others conversant with rifled pipe before the Fell patent issued apparently with readiness saw that, with Isaacs & Speed's patent before them, pipe could be rifled when hot, it must be presumed that defendants, with their expert assistants, would have discovered the same thing and would have constructed a device along the lines of the Isaacs & Speed patent, as they did later, had they thought the machine which they did construct and with which they did their rifling infringed on plaintiff's rights.

The insistence of defendants that plaintiff itself would not have performed the contract had it been the successful bidder is not impressive. If it saw fit to farm out the contract and thus bestow the profits, if any, on another, that is not a matter of defendant's concern.

A review of the claims pro and con made by the respective parties is not thought necessary. If considered,

this opinion would necessarily be quite extended. The case is out of the ordinary. That the plaintiff is entitled to a recovery seems clear, for the reason infringement has been found, but, as sometimes occurs in patent cases, it is difficult to fix the basis and amount to be allowed. Plaintiff's claims appeal to me as excessive and not dependable. It so reduced its original bid for rifled pipe at seventy-five cents per foot as to be willing to furnish such pipe at seventy cents per foot. This was doubtless due to the fact that the bidding was competitive. It had filled other contracts at a higher price, but I do not understand the bids on them were of a competitive character. There was no established market value for rifling pipe. The record suggests that plaintiff had been charging for it whatever it could get and varied the price both before and after competition began. It was offered the contract at sixty-five cents per foot of pipe, but refused to accept such offer. If its profits on the contract would have been as great, or even very much less than it now claims, it is not reasonable to believe it would not have accepted the sixty-five cent offer, rather than have the contract go to another party. It is fair to assume the offer was rejected either because a contract at that price would not yield a profit, or would yield a profit too small to be attractive. The defendants, we have seen, rated the unrifled pipe at sixty-four cents per foot and the cost of rifling at three and one-half cents per foot. The Youngstown Company fixed the value of unrifled pipe at sixty-six cents per foot. At whatever cost the plaintiff company itself could have rifled the pipe (and what its claim is in that respect we do not know), its valuation of unrifled pipe per foot could not have differed materially from that fixed by defendants or the Youngstown Company. At a valuation of sixty-four cents for unrifled pipe and three and one-half cents for rifling it, the defendants may be said, on the facts of this case, to have broken even,—neither making nor losing. It is not shown they did not operate economically or skillfully in their rifling work, or that they were materially out of the way in the value fixed by them on the unrifled pipe. I do not think it amiss to say that sixty-seven and a half cents per foot (the price defendants received) fairly represents the cost of rifled pipe. If that be so, then the failure of

plaintiff to get the contract was a loss to it of two and one-half cents on each of the 1,033,262 feet of pipe, or $25,081.55, at which sum I fix its damages. This sum, as it seems to me, will restore to plaintiff all it lost—being what plaintiff would have derived as a profit from its monopoly if defendants had not interfered, but which plaintiff failed to realize because of defendants' conduct. The defendants should also pay the cost of the litigation. No authority has been found or cited which warrants an allowance to plaintiff of a sum for the expenses incurred in the litigation and no award is made in that behalf.

The Master's report and findings are modified to conform to the above, and all exceptions thereto not in harmony with the foregoing are overruled.

An order may be made conforming to the above, and exceptions reserved.

(Clerk's Certificate omitted.)

SPECIAL MASTER'S REPORT ON ACCOUNTING OF PROFITS, OPINION AND ORDER, AND OPINION AND ORDER ON STANDARD OF COMPARISON IN ONEAL v. SAN JOSE CANNING CO.

IN THE UNITED STATES DISTRICT COURT
FOR THE NORTHERN DISTRICT OF CALIFORNIA,
SOUTHERN DIVISION.

LOUIS ONEAL,
Plaintiff,
vs.
SAN JOSE CANNING COMPANY,
a corporation,
Defendant.
IN EQUITY No. 1307.

SPECIAL MASTER'S REPORT ON ACCOUNTING OF PROFITS.

To the Honorable the Judges of the above-entitled Court:

By the interlocutory decree herein filed and entered June 23, 1925, it was adjudged "that said plaintiff is entitled to an accounting of the profits made by said defendant as a result of said infringement of said patent and patent rights for the years beginning with and including the year 1923 down to the present time," and the undersigned was by said decree appointed special master to take and report the evidence, together with my findings and conclusions thereon. It is to be noted that although the statute allows a plaintiff damages as well as profits, a requirement which has been interpreted as giving to the plaintiff whichever shall be the greater, the decree as framed makes no mention of damages; and the master, accordingly, has no authority except to find profits. This point has been called to the attention of the parties, and it is understood and apparently acquiesced in.

The proceedings before me follow.

(1) On June 26, 1925, the master signed an order for a statement, under Rule 63, presented by plaintiff.

There is no proof in my files that said order was served, nor was the original returned. Meanwhile an appeal had been taken from the interlocutory decree, and on January 18, 1926, 10 Fed. (2d) page 100, the Circuit Court of Appeals affirmed the decree below as to infringement of claims covering the device, but reversed it as to claims covering the method of packing, stating that this method was nothing more than the obviously necessary manner of operating the mechanism.

(2) On September 1, 1926, the master signed a second order for filing of an account under Rule 63, presented by plaintiff and substantially similar to the one issued in 1925. This order is separately returned.

(3) On October 14, 1926, defendant filed its sworn statement of account, preceded by an extended argument. This account was at the final hearing formally introduced by defendant in evidence, and is separately returned.

(4) Thereafter plaintiff noticed a motion for January 30, 1928, for a further sworn statement of account under Rule 63, and on that date defendant presented a motion for modification of the order of September 1, 1926. The above two notices of motion are herewith separately returned. Argument was had on said day, Clarence A. Linn, Esq., appearing for plaintiff and A. Schapp, Esq., appearing for defendant.

(5) Thereafter, on January 31, 1928, the master signed an opinion and order, which is annexed to this report, briefly to the effect that evidence was needed to determine what standard of comparison was open to defendant, and a hearing was ordered for February 27, 1928, on that question.

(6) On February 27, 1928, I was attended by the parties, Clarence A. Linn, Esq., appearing for plaintiff, R. M. J. Armstrong, Esq., and A. Schapp, Esq., appearing for defendant, and evidence was taken on the question of the available standard of comparison, which evidence, contained in a pamphlet volume marked "Volume 1" in 57 pages and in two physical exhibits, Defendant's Exhibits 1 and 2, is herewith separately returned.

(7) Following this hearing briefs were filed, by the defendant on May 9, 1928, and by the plaintiff on May 18,

1928. Thereafter, on May 21, 1928, the master signed and filed his opinion and order on the question of the standard of comparison, which order is annexed to this report and, with the first opinion referred to, is to be considered a part thereof. Briefly, it was decided that hand packing aided by either Exhibit 1 or Exhibit 2 was available to defendant as a standard of comparison in 1923 and 1924; plaintiff's motion for a further statement of account being denied and defendant's motion to amend the order being granted. June 5, 1928, was appointed as the time for further evidence to determine profits.

(8) On June 5, 1928, I was attended by the parties, Clarence A. Linn, Esq., appearing for plaintiff and R. M. J. Armstrong, Esq., and A. Schapp, Esq., appearing for defendant. Evidence was taken, which was stenographically reported, and is herewith separately returned as Volume 2. The matter was thereupon submitted without further argument, and it was stipulated by the parties that the provision of Rule 114 of this court providing for the announcement of the report in draft, with opportunity to the parties to file objections with the master, should be waived; and that the master's report when ready should be signed and filed as his final report, subject to exceptions to be filed with the Clerk.

The above statement is a full statement of the proceedings before me in this accounting, and the statement made of the evidence received and returned covers all the evidence upon which this report is based.

Responding to the directions in the interlocutory decree, I conclude and report as follows:

1. Defendant's profits, being its savings by reason of the infringement found by the decree, amount to the sum of $662.19, for which sum plaintiff should have the final decree of this Court against defendant.

2. In addition to said sum, plaintiff should recover interest thereon at the rate of 7% per annum, beginning January 1, 1925, being approximately the close of the infringing period, to date of the final decree herein, and interest thereafter on the amount of the total profits and accrued interest, at the same rate, until said judgment and decree is paid.

The above is hereby settled, signed and filed as my final report, herein, and the parties notified of said action by mail, this 8th day of June 1928.

H. W. WRIGHT,
Special Master.

(Caption Omitted.)

MASTER'S OPINION AND ORDER.

Equity Rule 63, requiring parties accounting before a Master to bring in their respective accounts in the form of debtor and creditor, undoubtedly originated in and has its most obvious and ready application to ordinary accounts such as those of a partner or trustee, or the like, where a set of books would show money items on each side of the account. The practice prescribed obviously makes it possible for the complainant, upon receiving the discovery embodied in the Rule, to accept certain items and narrow the hearing before the Master to items that are disputed either in fact or in law. Accountings of profits in patent cases differ widely from the situation presented in ordinary accounts, as anyone experienced in such accountings will realize. Books of account in patent accountings may serve as sources of material, but rarely contain the ultimate figures of debit and credit desired, making necessary the use of estimates. The machinery of Rule 63, therefore, labors considerably in the effort to grind out the results desired, but since discovery is of right and the fundamental principle of narrowing the issues at the hearing is here equally pertinent, Courts of Equity in this country have usually applied Rule 63 to patent accountings and it is the practice in this District. The very broad powers of the Master under Rule 62 would, in my opinion, give him power to require the filing of the statement under Rule 63, even if the latter did not exist. Though it is customary here for the Master to order the filing of a debtor and creditor statement as the first step in the accounting, the practice adapted to settle the issues is quite unsettled. It must not be forgotten, also, that while the Master has broad powers of regulation, he is necessarily ignorant of the requirements of the particular situation and it, therefore, falls in the first

instance upon the Plaintiff's counsel to draft the Master's order requiring the filing of the account under Rule 63, and to insert therein the particular details in the nature of discovery, which, in counsel's opinion are best adapted to ascertain the profits due. Equally, it would seem, is the burden then cast upon counsel for the accounting Defendant either to obey the order as given or, by timely motion before the Master, to attempt a correction of the Master's order. I see no reason furthermore why, in this described program of settling the issues, there may not be occasions for taking evidence just as in Equity evidence may be taken in a preliminary hearing in support of a plea. For example, it seems to me that it would be a correct and desirable practice in accountings before the Master that there be a preliminary hearing that would be proper in particular cases to determine the standard of comparison to be applied in the particular case. An experience of eighteen years as a Master of this Court has not determined any settled practice in this regard, and these observations are called forth solely by the facts of the present case with the idea that they should be generally applicable.

The facts of the present situation are as follows:

On June 26, 1925, the Master signed an order for a statement under Rule 63 with certain detailed requirements under seven headings deemed by Plaintiff necessary to determine the profits made by the Defendant from canning string beans packed asparagus style. Thereupon, as is not unusual, the matter rested in the Master's files. There is no proof in my files that said order was served, nor was the original returned. Meanwhile an appeal had been taken from the interlocutory decree, and on January 18, 1926, 10 Federal 2d, page 100, the Circuit Court of Appeals affirmed the decree below as to infringement of claims covering the device, but reversing it as to claims covering the method of packing, stating that this method was nothing more than the obviously necessary manner of operating the mechanism.

On September 1, 1926, there was presented to me by Plaintiff and signed a second order for filing of an account under Rule 63 substantially similar to the one issued in 1925.

On October 14, 1926, there was filed with me Defendant's verified statement of account. This statement is preceded by a long discussion setting forth the modification of the decree by the Court of Appeals and an argument on the law largely directed to development of Defendant's view that the original Master's order was too broad. The Master does not read documents filed with him, unless counsel moves them to his attention.

Following this statement of the law is an account giving some of the discovery ordered by the Master's order and disregarding, to a large extent, the balance of the order, and concluding with a statement of the profits on the theory that it was open to Defendant to use as a standard of comparison the costs of packing string beans asparagus style by hand. Obviously the practice followed by the Defendant of disobeying the Master's order and making discovery according to his own notions of what the order should have been was unsound, and, if it were thought necessary, would expose the Defendant to punishment for contempt.

Defendant's counsel should have moved for a modification of the order.

Following this filing of the account, Plaintiff noticed a motion for the 30th of January, 1928 for a further sworn statement of account under Rule 63, and on the date named, I was attended by Clarence A. Linn, Esquire, counsel for Plaintiff, in support of the motion, and by A. Schapp, Esquire, for Defendant. At the same time, Defendant presented a motion for modification of the order, the purport of which was to confine the costs to the use of the infringing mold or device and to introduce into the details required an item of cost of filling the can by Defendant's selected standard of comparison. No evidence was offered or taken, and the only light I have on the situation is the argument of counsel, aided to some extent by the disclosure made in the account filed.

From this account, as well as from the argument, it would appear that the first issue to be decided is that of the proper standard of comparison. From the account, page 5 and following, I gathered that Defendant was a licensee of the Plaintiff under the patent in suit, paying therefor a yearly royalty of five hundred ($500.) dollars. A renewal of the license for 1923 was not accepted by the

Defendant, who, during that year and 1924 used the device decreed to be an infringement.

In 1925 and 1926, as stated in this account, page 19, the Defendant packed its asparagus style beans by hand. Its account of profits is founded on the difference in cost between the costs of filling in 1923 and 1924 and compared with the greater cost of hand filling in 1925 and 1926, showing a saving by the infringement of $662.19.

The complainant's contention, on the other hand, is that the packing of string beans whole, lengthwise in the can, in the manner of asparagus stalks was not known in the art until plaintiff's device, two semi-circular molds with certain accessories, which bunch the beans and facilitate their insertion into the cans, created that particular style of packing; that prior thereto, string beans were not packed asparagus style by hand, but were packed cut up into pieces. Plaintiff's contention, accordingly, is that the selected standard of hand packing is not applicable under the law and that Plaintiff is entitled to the entire profits of Defendant for beans packed by the infringing device in the asparagus style originated by Plaintiff, there being no hand operation for such packing then known.

It is, of course, settled law that a device or method not known at the time of the infringement is not available as a standard of comparison, 277 Federal, 177; *Walker,* Section 725. If Plaintiff is correct on the facts, his claim that he is entitled to all the profits of beans packed asparagus style, without reference to any standard comparison, would seem on my present understanding to be correct.

Considering the delay and the failure of Defendant to earlier move in modification of the order, I might well grant a motion to comply with the order as given. The unsettlement of the practice seems, however, to suggest that before Defendant is required to make a further accounting, a more lenient view should prevail and that we should now proceed as we should have proceeded if defendant had moved in modification of the order as soon as it was given.

The point upon which light is needed by evidence is as to the state of the art in the years 1923 and 1924, with a view of determining the proper standard of comparison to be applied. The burden of proving the standard of comparison, whether it be the hand operation or some other means,

rests on Defendant, and a hearing should be had at which Defendant, as the moving party, will present evidence, the Plaintiff to be heard in reply. If Defendant does not convince the Master that hand operation, or some other standard of comparison, was open to Defendant during the period of infringement, Defendant must be prepared within a brief time thereafter to file a further statement of account of its entire profits in packing beans asparagus style as prayed for by Plaintiff.

I will appoint Monday, February 27, 1928, at 10 o'clock A. M. at my office, Room 706 at 68 Post Street, San Francisco, California, as the time and place for hearing evidence as to the standard of comparison to be used.

Dated January 31, 1928.

H. M. WRIGHT,
Special Master.

(Caption Omitted.)

SPECIAL MASTER'S OPINION AND ORDER ON STANDARD OF COMPARISON.

On September 1, 1926, the master made his order for the filing of a sworn statement of account by defendant. On October 14, 1926, the account was filed. On January 12, 1928, plaintiff noticed a motion for the filing of a further account, conformable to the master's order, to be heard on January 30, 1928. The parties appearing on that day, defendant filed a motion to amend the master's order, and argument was heard on both motions. On January 31, 1928, the master announced to the parties his opinion and order, in substance to the effect that before proceeding further the defendant should prove that hand packing of string beans asparagus style was a known alternative, open to defendant at the time of the infringement found by the decree, and a hearing on this issue was ordered and was had on February 27, 1928. At the request of the parties, the matter was submitted at the close of the hearing on briefs to be filed at times stated. No briefs having been filed, the master on May 2, 1928, notified the parties that defendant's brief should be filed on or before May 7, 1928, a date subsequently extended by the master to May 9, 1928;

plaintiff's reply to be filed on or before May 14th, and defendant's final brief on or before May 21, 1928. The defendant, on May 9th, filed a brief; plaintiff's brief was filed on May 18, 1928; it seems unnecessary to await defendant's reply.

The evidence taken shows that during the season in 1922 for packing string beans, which season begins each year toward the last of July, the defendant paid a royalty to plaintiff of $500. At that time the application of Rancadore, General Manager of defendant, for the mold later declared to be an infringement of the Greco mold of plaintiff was before the patent office. Toward the end of July, Mr. Rancadore asked one of his employees to get up a device which would facilitate hand packing of string beans asparagus style. The result was the model Exhibit 1. This is a block of wood around which at each end was bent and secured a piece of half-round iron, forming upwardly projecting arms within which a bunch of string beans could be placed on the block, after which the ends were trimmed off with a knife. The upwardly extending iron prongs fulfilled the function of gauging the quantity of beans to be packed in the can and of retaining them while the cutting was going on. The bunched string beans, after having been trimmed, were then taken out of the device by hand and placed in the can. Defendant's manager, Mr. Rancadore, having tried this operation with some half dozen cans, did nothing further with it. In the seasons of 1923 and 1924 payment of royalty was refused, and defendant packed by the Rancadore mold, declared later to be an infringement.

During the seasons of 1925 and 1926 defendant packed by hand, using to facilitate hand packing the device in evidence as Exhibit 2. This is the same as Exhibit 1 except for the fact that the block projects at each end beyond the iron uprights, affording thus a surface to facilitate a clean cut with the knife.

The account which defendant has filed is based upon a comparison between the cost in filling the can with string beans by the use of the infringing mold and the cost of trimming the beans and filling the can by hand packing aided by Exhibit 2.

The facts stated are abundantly proved, with every evidence of plausibility and with no opposing evidence. It

is not claimed that Exhibit 2 is an infringing device, and it seems obvious that it is not. The conclusion therefore follows that the hand packing method of defendant as described and as practiced in the seasons of 1925 and 1926 had been substantially developed by him as early as July 1922; that he could have used hand packing aided by either Exhibit 1 or Exhibit 2 in the years 1923 and 1924 when he used the infringing mold, and that therefore this hand packing as practiced is a proper standard of comparison to be used in this accounting. The fact that there is a slight difference, as described, between Exhibit 1 and Exhibit 2, is immaterial. Exhibit 1 could have been used, but the modification by extending the block to facilitate cutting was obvious and a development that ensued naturally as soon as the method was put in practice.

Plaintiff's motion for a further statement, based as it is upon the theory that hand packing was not open to defendant, must be denied. No other grounds of objection have been presented that I know of.

It remains to rule on defendant's motion to amend the order for the account. The first item of defendant's motion is to insert in the order at line 23 the words "by means of the infringing mold," so that the requirement will be, "a sworn statement of account in debtor and creditor form of the profits made by you from canning string beans, packed asparagus style, by means of the infringing mold, during the year 1923" etc. This motion is granted.

Sub-paragraph (1) requires a statement of "the quantity of beans packed by you asparagus style and the amount of money paid therefor." If plaintiff were entitled to all the profits of defendant for beans packed asparagus style, this requirement might well enter into the accounting. Since, however, the method of packing in this way has not been sustained by the Circuit Court of Appeals, and since it is clear that it was open to defendant to pack beans asparagus style, by hand, the only profits to be accounted for would seem to be dependent upon the cost of the packing by the infringing mold, as compared with the cost of hand packing. This is the theory of the account as filed, and as the master is at present advised the theory is correct.

The next part of the motion is to cancel paragraph (4), as follows: "Cost of canning such beans, giving the

items of such cost and the cost of each item," and to substitute therefor the words "cost of filling the cans by means of the infringing mold." The motion is granted.

It is next moved to cancel paragraphs 5, 6, and 7 of the order, reading as follows:

"(5) Cost of sale or marketing.

(6) Any other costs properly itemized.

(7) The profits derived by you in such business,"

and to substitute therefor the following: "cost of filling the cans by means of a standard of comparison." The profits to be accounted for seem plainly to be concerned solely with the cost of filling the cans, and since hand packing was a proper standard of comparison, open at the time of the infringement, the change seems proper. The motion is granted.

There seems no reason why the preliminary stage of the accounting, having to do with preliminary discovery by defendant by the accepted method of filing a sworn statement of account, should not now be deemed complete, and why the main hearing on the accounting should not proceed. I will appoint Tuesday, June 5, 1928, at 10:00 o'clock A. M., at my office, room 706, No. 68 Post Street, San Francisco, California, as the time and place for further hearing herein. The parties may then present such evidence as they see fit, to aid the master in determining profits under the decree. If no such evidence is offered, I will report profits on the basis of defendant's account already filed.

The parties will advise me in advance if a reporter is likely to be required.

Dated May 21, 1928.

H. M. WRIGHT,
Special Master.

(Endorsed) Filed June 8 1928
Walter B. Maling, Clerk.
By A. C. Aurich, Deputy Clerk.

DISTRICT COURT OF THE UNITED STATES

NORTHERN DISTRICT OF CALIFORNIA,
SOUTHERN DIVISION.

AT A STATED TERM of the Southern Division of the United States District Court for the Northern District of California, held at the Court Room thereof, in the City and County of San Francisco, on Wednesday, the 7th day of November, in the year of our Lord one thousand nine hundred and twenty-eight.

PRESENT: The Honorable FRANK H. KERRIGAN,
District Judge.

LOUIS ONEAL
vs.
SAN JOSE CANNING COMPANY, a corp. } No. 1307.

Plaintiff's Exceptions to the Master's Report on accounting of profits, heretofore argued and submitted, being now fully considered, it is ordered that said exceptions be and they are hereby overruled, and that said report be and the same is hereby confirmed.

OPINION OF THE CIRCUIT COURT OF APPEALS FOR THE SIXTH CIRCUIT IN GORDON FORM LATHE CO. v. WALCOTT MACHINE CO., NO. 5111, DECIDED APRIL 12, 1929, 32 FED. (2d) 55.

1. Patents Key 328—No. 1,542,803, claims 1, 2, 28-30, 33, 34, and 39-42, for tool-moving and tilting mechanism in lathe, held valid and infringed.

Claims 1, 2, 28-30, 33, 34, and 39-42 of Gordon and Redlin patent, No. 1,542,803, for tool-moving and tilting mechanism in lathe for nongeometric figures, *held* valid as involving invention, and not anticipated, entitled to broad and liberal construction, and infringed.

2. Patents Key 327(13)—Though successive decisions for patentee in Patent Office, Court of Appeals, and District Court are binding only on priority, they strengthen presumption of patentability (35 USCA § 63).

While successive decisions in favor of patentee, as against alleged infringer, by Patent Office tribunals, by Court of Appeals of District of Columbia in interference proceeding, and by District Court in action under Rev. St. § 4915 (35 USCA § 63), bind parties only on question of priority of invention, yet they greatly strengthen presumption of patentability arising from issuance of patent.

3. Patents Key 34—Court must first look to state of art in determining question of invention.

In determining whether invention is disclosed by patent, court must first look to the state of the art.

4. Patents Key 66(1)—Patents not disclosing purpose of subsequent patent, and restricted to substantially different purpose, are not anticipations.

Patents cannot be considered as anticipations, which do not disclose purpose, means, and mechanism for accomplishing end of patent in suit, and which are restricted to accomplishment of substantially different and limited purpose.

5. Patents Key 36(2)—That prior devices were not accepted and adopted to meet demand is strong evidence that change involved more than mechanical skill.

That prior devices, though adaptable to meet demand met by patented device, were not accepted by the trade and so adapted, strongly indicates that changes were not obvious, and involved more than mechanical skill.

6. Patents Key 235(1)—Superiority of operation does not negative infringement.

Superiority of operation does not of necessity negative infringement.

7. Patents Key 235(1)—Accomplishing same result more efficiently, but by same means, operating in same manner, is infringement.

To accomplish same result, though more efficiently, by employment of substantially the same means, or their equivalents, operating in substantially the same manner, is infringement.

In Error to the District Court of the United States for the Eastern District of Michigan; Charles C. Simons, Judge.

Suit by the Gordon Form Lathe Company against the Walcott Machine Company. From an adverse judgment [20 F. (2d) 673], complainant brings error. Reversed in part and remanded.

F. O. Richey, of Cleveland, Ohio (John W. Michael and Bottum, Hudnall, Lecher, McNamara & Michael, all of Milwaukee, Wis., and Richey & Watts, of Cleveland, Ohio, on the brief), for appellant.

J. L. Stackpole, of Boston, Mass. (Otis A. Earl, of Kalamazoo, Mich., and H. L. Kirkpatrick, of Boston, Mass., on the brief), for appellee.

Before MOORMAN, HICKENLOOPER, and KNAPPEN, Circuit Judges.

HICKENLOOPER, Circuit Judge. The appellant originally instituted its action in equity in the District Court for an injunction and accounting for alleged infringement of patent No. 1,542,803, issued June 16, 1925, upon application of Charles Gordon and Alfred W. Redlin, filed July 19, 1920, for a lathe. The District Court found the claims in issue valid, but not infringed. The parties to this appeal will be referred to by the designations of complainant and defendant, by which they were known in the court below. Claims 1, 2, 12, 23, 24, 28-30, 33, 34 and 39-42 are in issue.

[1] The patent in suit relates particularly to lathes for turning irregular or noncircular bodies of metal, such as cams, cheek pieces of cranks, etc., otherwise referred to by counsel as nongeometric figures. The separate units of the machine are designed with a view to arrangement in rank and the turning, in one operation, of the multiple cams on an automobile cam shaft. The patent is here attacked as

void for want of invention, and, if valid, lack of infringement is urged in defense. The claim of invention is predicated both upon the aggregate organization of the separate units in rank and upon the combination of means for the operation of the single unit. It is apparent, however, that unless invention exists in organizing the single unit, the mere arrangement of such units in rank, so as to work simultaneously upon a number of different cams mounted upon a single shaft, would not constitute such invention. We are therefore primarily concerned with the question of invention, as it relates to the separate unit of the complainant's machine, and, if the patent be found valid, then with the question of infringement by the defendant's machine.

Prior to about 1920 such cams were cast and then rough-ground to approximate dimensions. They were then case-hardened and reground to accurate dimensions. Such grinding operations were expensive, dirty, and to some extent dangerous, and Gordon conceived the idea of substituting a turning operation for the initial rough-grinding. After hardening, the steel cannot be turned, and the final or finishing grinding operation is still practiced. In order to successfully accomplish the turning operation upon a revolving blank, the work being revolved and moved transversely of the cutting tool, the tool must of necessity be moved forward and back in a plane transverse the axis of the work, so as to trace the outline of the finished cam or other work; and such tool must likewise be oscillated in the plane of its reciprocating movement, so that it may always maintain the substantially normal cutting angle in relation to the surface of the work, and neither skip and scrape, nor gouge or "hog," such work.

To accomplish these results, Gordon and Redlin provided two cams adjacently mounted upon a shaft turned in synchronism with the revolution of the work. Independent of these cams, but suitably placed, a plate or flat rocker arm, referred to as the frame, was pivotally suspended from a supporting shaft. This permitted of a swinging movement to and from the work. To this frame was affixed a roller bearing contacting with one of the cams, and a spring tending to draw the frame toward such cam and to hold said roller in contact therewith. The tool

holder was also mounted on the frame adjacent to the work, and the angularity of the tool to the work was controlled by the other cam and a bell crank lever, with roller bearing and spring adapted to hold such bearing upon its cam. Neither of the controlling cams were replicas of the work to be cut, but both were more or less arbitrarily designed to accomplish the dual purpose of swinging the tool to and from the axis of the work, and of oscillating the tool at or near its cutting edge, so that the normal angle of the tool to the work might be continuously maintained.

Of the claims in issue, claims 1, 2, 28, 29, 30, 33, 34, 39, 40, 41, and 42 relate to the tool-moving and tool-tilting mechanism above described. Claims 12, 23, and 24 relate to matters of general organization and automatic stopping means, and the subject-matter of these claims was not pressed upon argument, is said not to be incorporated in defendant's machine, and is not here considered. Of the claims relating to tool-moving and tilting mechanism, claim 2 is admittedly typical and reads:

> "2. In a lathe the combination of a rotary work holder, a tool holder provided with a cutting tool, movable towards and from the axial line of the work holder and angularly adjustable in a plane transverse to the axis of the work holder, cams adapted to vary the distance between the point of the tool and the axial line of the work holder, and to vary the adjustment of the tool for maintaining proper cutting and clearance angles of the tool to work of noncircular contour, means for synchronously rotating the work holder and cams, and means for simultaneously causing relative movement between the work holder and tool holder axially with relation to the work holder."

The Gordon and Redlin lathe obviously has its limitations and its disadvantages, if not defects. The tool is pivoted at, or substantially at, its point, thus requiring it to turn too rapidly and over too great an arc when cutting long-nosed or sharp-pointed cams. This makes it impossible for the tool to follow at normal angularity the desired contour immediately after turning such sharp nose, and there exists a tendency to leave excess metal on the far side of the point. The necessities of commercial construc-

tion and the use of the roller upon the tool-reciprocating cam, in which a depression or hollow is used to withdraw the tool from the center of rotation of the work, likewise limits the extent to which the tool can be withdrawn from the axis of the work, and thus limits the length of the nose or irregular projection which the device can cut, as a practical matter. Notwithstanding these defects and limitations, a comparatively large number of the machines have been marketed commercially, a great many cams and crank cheeks have been successfully turned, and some of such machines are still rendering satisfactory service. The general utility of the device as a commercial and operating machine would seem to be established, and, if it has been supplanted, it is more probable that this was due to the development of the defendant's machine, which avoids some of the disadvantages of, and does some types of work better than, the complainant's machine. On the degree of operability necessary, see *Hildreth v. Mastoras,* 257 U. S. 27, 34, 42 S. Ct. 20 (66 L. Ed. 112).

[2] The broader claims of complainant's patent, numbered 2, 28, and 29, have been the subject of direct adversary contest between the complainant and H. W. Melling, inventor of defendant's machine, in several other tribunals. During pendency of the Gordon application in the Patent Office, Melling filed his application for patent upon the alleged infringing machine, February 27, 1923. A patent No. 1,512,995, subsequently issued October 28, 1924, and defendant's machine is fully described therein. An interference was declared, and the interference proceedings passed successively to decision before the Law Examiner, the Examiner of Interferences, the Examiners in Chief, the Commissioner of Patents, and the Court of Appeals of the District of Columbia. In each of these tribunals priority of invention of the claims in interference was awarded to Gordon and Redlin. Melling thereupon brought action under R. S. § 4915 (35 U. S. C. A. § 63), in the District Court for the Northern District of Ohio, making the complainant here defendant therein. The issue thus raised was again decided in favor of Gordon and Redlin. 14 F. (2d) 437. In all of these proceedings, and especially in the last mentioned, the question of patentable novelty was directly presented to the attention and consideration of

the several tribunals. Cf. *Palmer Pneumatic Tire Co. v. Lozier,* 90 F. 732, 736 (C. C. A. 6). The prior art was fully considered. The interference was not dissolved for want of patentable novelty, and the bill under R. S. § 4915, was not dismissed for that reason. While all this may go no further than to bind the parties upon the question of priority of invention, unless there is "thorough conviction to the contrary" (*Haughey v. Lee,* 151 U. S. 282, 285, 14 S. Ct. 331 [38 L. Ed. 162]; *Computing Scale Co. v. Standard Scale Co.,* 195 F. 508, 515, 516 [C. C. A. 6]), yet it greatly strengthens the presumption of patentability which arises from the issue of the patent to complainant (*Hildreth v. Mastoras, supra,* at page 32 of 257 U. S. [42 S. Ct. 20]).

[3] A definition of what we conceive to be the true inventive step of Gordon and Redlin, in the light of prior practices and in view of the prior art patents, at once disposes of the question of anticipation and confirms us in the opinion held by all other tribunals considering the question, including the District Court in this action, that invention is disclosed by the patent to complainant. In determining such inventive step, the court must first look to the state of the art. *Eibel Process Co. v. Minnesota & Ontario Paper Co.,* 261 U. S. 45, 63, 43 S. Ct. 322 (67 L. Ed. 523). The prior art patents most strongly relied upon, and clearly the most pertinent, are those to Brophy, No. 649,905, May 22, 1900, and Montreuil, No. 701,217, May 27, 1902.

The patent to Montreuil related particularly to turning articles of elliptical form in cross-section. By the employment of a sliding tool support as a part of two pantographs, tied together by link arrangement and moved by an eccentric of proper size, making two revolutions to each revolution of the work, the tool was made to traverse a circular orbit in synchronism with the revolution of the work, and at the same time to maintain substantially the normal angularity to the work. By the means employed the Montreuil lathe could turn only an ellipse, and the patent neither suggests nor discloses means for turning an irregular or nongeometric figure. The patent does suggest the necessary function of tool movement, reciprocating in a plane perpendicular to the axis of the work, with the maintenance of the normal angularity of tool to work, but

manifestly no patent may issue for these functions, but only for the means or elements of the machine by which the result is accomplished.

The same observations are applicable to the patent to Brophy. This invention related to an attachment for automatic lathes, and had for its object the provision of mechanism for cutting eccentric grooves in a metal blank. During the initial period of operation the Brophy lathe operated as the ordinary engine lathe. Such operation was continued until the point was reached at which it was desired to cut the eccentric; that is, until metal had been cut away from the outer circumference of the blank to the outer point of the circumference of the eccentric, and thereafter crescents were cut from the blank, opposite the outer point of the circumference of the eccentric, by employing a spring and cam to force the tool forward upon rotation of the work. Since the eccentric thus being formed passed in a circular orbit about the axis of the revolving work, it likewise became necessary for the cutting edge of the tool to perform an orbit, and this was accomplished, and substantially normal angularity to the work was maintained, by the use of an eccentric cam to tilt the tool holder synchronously with its reciprocatory movement and the revolution of the work. This patent also recognizes the necessity of synchronous reciprocatory movement of the tool and an oscillation of the tool to maintain its normal angularity to the work. Brophy neither suggests nor discloses means for cutting other than an eccentric of geometric form.

The patents to Huston, No. 494,864, and to Diehl, No. 607,987, more remotely pertinent, are for metal cutting mechanisms of the boring mill type. In Huston the tilting of the tool to maintain the normal cutting angle is not considered a necessary function, but the use of cams to control the path of the tool in conjunction with a turning of the tool upon its axis vertical to the surface to be cut is disclosed. The same necessity of turning the tool to cut an ellipse in a plate upon a revolving work table is disclosed in the patent to Diehl, and by Diehl this result is accomplished by the use of an eccentric, instead of the cams of Huston. Neither Huston nor Diehl discloses the Gordon mechanism.

[4] In none of the patents cited is any effort shown to devise, or disclosure made of, means for oscillating the tool,

in synchronism with its reciprocatory movements and the revolution of the work, by the use of an appropriately shaped cam, movable frame, and bell crank lever tool support. None contemplates the turning of irregular or nongeometric forms. Those patents cannot be considered as anticipations which do not disclose the purpose, means, and mechanism for accomplishing the end of the patent in suit, and which are restricted, by the mechanisms disclosed, to the accomplishment only of a substantially different and limited purpose. *Eibel Process Co. v. Minnesota & Ontario Paper Co.*, 261 U. S. 45, 66, 43 S. Ct. 322 (67 L. Ed. 523); *Canada et al. v. Michigan M. Iron Co.*, 124 F. 486, 493 (C. C. A. 6); *Munising Paper Co. v. American Sulphite Pulp Co.*, 228 F. 700, 703 (C. C. A. 6); *Hobbs et al. v. Beach*, 180 U. S. 383-392, 21 S. Ct. 409 (45 L. Ed. 586); *Fulton Co. v. Bishop & Babcock Co.*, 284 F. 774, 777 (C. C. A. 6). *Cf. Outlook Envelope Co. v. General Paper Goods Mfg. Co.*, 239 F. 877 (C. C. A. 2). It is true that the mechanism of the Brophy patent can be so reorganized as to cut a cam or other nongeometric figure, but this is done only by substituting for the eccentrics of Brophy the more or less arbitrarily shaped and specially designed separate control cams of the patent in suit. Such reorganization constitutes incorporating into the machine of Brophy the essence of the Gordon invention to accomplish the Gordon result. Such an organization was neither conceived nor disclosed by Brophy, and the possibility of reorganization, so as to reveal in the machine of Brophy the actual disclosures of Gordon, will not convert the patent to Brophy into an anticipation. *Cf. Topliff v. Topliff*, 145 U. S. 156, 161, 12 S. Ct. 825 (36 L. Ed. 658); *Clough v. Barker*, 106 U. S. 166, 175, 1 S. Ct. 188 (27 L. Ed. 134); *Rockwood v. General Fire Extinguisher Co.*, 8 F. (2d) 682-686 (C. C. A. 2); *Block v. Nathan Anklet Support Co.*, 9 F. (2d) 311, 312 (C. C. A. 2). As stated by the District Judge, the reorganization itself "indicated inventive thought."

[5] If we are to look to the prior art and the specifications to determine the true nature of the invention, the precise inventive step of Gordon and Redlin would seem to lie in combining with the means for producing reciprocatory movement of the tool, old in the art, the means for controlling the oscillatory movement of such tool by a separate

and specially designed cam, spring, and bell crank lever, in such organization that the means for both reciprocatory and oscillating movement, working in synchronism with each other and with the rotation of the work, could cut a cam, crank cheek, or other nongeometric form. Although the demand for such a machine tool had long existed, such combination had not before occurred to any one. The devices of Brophy and Montreuil, though adaptable, were not accepted by the trade and so adapted. Such fact strongly indicates that the changes were not obvious and involved more than mechanical skill. *Potts & Co. v. Creager,* 155 U. S. 597, 15 S. Ct. 194, 39 L. Ed. 275; *Diamond Rubber Co. v. Consolidated Rubber Tire Co.,* 220 U. S. 428, 31 S. Ct. 444, 55 L. Ed. 527.

The present patent is in a very true sense generic, and the patentee a pioneer in this particular branch of the art. The machine had commercial utility and was accepted by the trade, and its manufacture was reasonably successful until thrown into competition with the infringing machine, which avoided the chief defect, heretofore mentioned, and did not have some of the limitations of the patented device. The claims of the patent in suit were considered as entitled to broad, liberal construction in the Patent Office proceeding by Judge Westenhaver in the proceedings under R. S. § 4915, and by the District Judge below. We think that such claims are entitled to this liberal construction, and concur in the opinion of the other tribunals that the patent discloses invention and is not anticipated, and that the generic claims are valid.

We then turn to the question of infringement. It is in evidence that Melling, the designer of defendant's machine, was called upon as an expert in mechanics to inspect one of the complainant's machines in operation at the plant of the Jackson Motor Shaft Company. Upon arrival he found that the tool left "a lump on the work just below the nose of the cam" by reason of the rapidity with which the tool oscillated on turning the nose, and that the noise and jar of the bell crank lever falling upon the cam controlling this motion was such as to convince him that the design was impractical. Melling then went to his shop and with sketch and model cams, plates, and rollers, commenced to experiment for the adaptation of the principle of the Blanchard lathe to supply the reciprocating motion of the tool.

The Blanchard lathe was old in the art, and while it itself had been used exclusively in wood-turning operations, the principle of the Blanchard lathe had been used in the rough-grinding of cams prior to Gordon. In the Blanchard lathes a pattern is used of the precise shape and dimensions of the cross-section of the finished work. The cutting means used is a circular cutter with multiple teeth, or, in the grinding operations, a grinding wheel. This cutter is mounted adjacent the work upon one end of a reciprocating carriage or frame. On the other end of this frame is mounted a circular and revolvable guide plate bearing upon the pattern cam. The distances between the axes of the pattern cam and the work is the same as that between the axes of the cutter and the guide plate. The work and pattern are on the same relative sides of cutter and guide. The guide plate is held firmly against the pattern cam by spring tension, and the reciprocatory movement of the cutter to and from the work, to produce in the work a replica of the pattern, is thus produced by equality of revolution of the work and pattern cam.

BLANCHARD

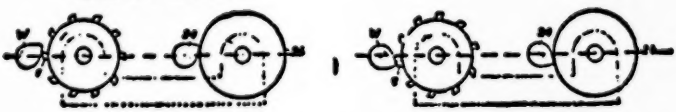

The use of the Blanchard lathe, as such, involves no question of oscillation of the cutting tool. It is obvious that in order to produce in the work, in cross-section, a replica of the pattern cam, the diameter of the circle traveled by the teeth of the revolving cutter must be exactly the same as the diameter of the circular guide plate. Thus, as the pattern cam and work are revolved at equal speed, the cutting edges of the tool successively maintain the same relative position on the work as the point of contact of the guide plate maintains on the pattern cam. It is also obvious that, where the pattern used is cam-shaped or irregular in design, the point of contact between the nose of the cam and the guide plate, and hence the point of cut on the work, will at times be above and at times below the plane of the axes of the work, cutter, pattern, and guide.

It is insisted that Melling simply applied the principle of the Blanchard lathe in designing his machine, substituting a single oscillating tool for the revolving circular cutter of the Blanchard lathe, and that by reason of the adoption of the principle of the Blanchard lathe, the tool being pivoted at a point the same distance from its cutting edge as the radius of the circular guide plate (assumed to be substantially remote from the cutting edge), the size of the arc through which the tool must oscillate in passing over the nose of the cam is very materially reduced, and the fact that the tool follows the point of the cam from above the horizontal plane, around the point and down below the horizontal plane, so far reduces the speed required in making the turn, and the jar of the bell crank lever roller upon the control cam, as to make a practical success of the Melling machine and avoid the features of disadvantage in the Gordon machine. Thus it is urged that the Gordon and Melling machines operate upon entirely different principles, the tool of Gordon tilting upon its cutting edge, while the tool of Melling oscillates upon a point remote from such cutting edge; the cutting edge of the tool of Gordon reciprocating substantially in a straight line, the edge of the Melling tool traveling in a marked orbit; and the lathe of Melling following the teachings especially of the Blanchard lathe, with the orbital movement of the tool of Brophy and Montreuil, while Gordon and Redlin take a step backward in the art by abandoning such orbital movement of the tool, except to an infinitesimal, theoretical degree.

The above-quoted claim unquestionably reads upon the defendant's machine, and if we go further, and compare the operative parts of the two machines, we find the same essential elements in both. As said by the Law Examiner in the Patent Office interference proceedings: "Each machine comprises, as its essential elements, a rotary work holder, a cutting tool, a tool-supporting member movable transversely to the work holder, a tool holder adjustably mounted on the tool-supporting member, work-shaping and tool-adjusting cams co-operating with the tool-supporting member and the tool holder, respectively, to vary the distance between the tool and the axis of the work holder, and to control the angular relation of the tool to the work, and means for rotating the work holder and the cams synchro-

nously. And in each machine the cam that moves the tool-supporting member towards and from the work holder is so shaped as to give the desired form to the work." To this definition of similarity of means might be added that in both we find the bell crank lever with its roller bearing as the means of transmitting the oscillatory movement from the control cam to the tool.

The fact that in Melling the tool-supporting member is apparently pivoted at a point remote from the cutting edge of the tool is immaterial in principle, since the point of pivot is controlled entirely by the size of the circular guide plate which is used. Convert such guide plate into a revolving pin of small dimensions, and the point of pivot would be brought substantially to the point of cut. The Melling machine would then be able to cut a design with hollow or dimple, which it cannot now do. The fact that the bell crank lever and control cam would then have to be redesigned, and the objection that the Melling machine would then be subject to the same disadvantages or defects as the Gordon machine, do not detract from the position that in principle the functions and the elements of the two machines are substantially the same. This is the more apparent when applied to the difference in the pattern cams used to control the line of cut. In the Melling machine the pattern is a replica of the finished work, and the spring tension impels the frame toward the work, holding the guide plate firmly against the pattern. In the complainant's machine the work and pattern cam are on opposite sides, respectively, of the tool and the roller member controlling the reciprocatory movement. The spring urges the frame away from the work, thus holding the bearing tightly against the pattern cam. In the complainant's machine, therefore, the pattern cam is not a replica, but substantially the reverse in shape, to the pattern of Melling. The principles, however, are identical.

Melling did not pattern his machine upon the Blanchard lathe, in so far as the tilting of the tool was concerned, for the principle of the Blanchard lathe contemplated only a revolving circular cutter head. The only suggestion drawn by Melling from the Blanchard lathe lay in the observation that in a design of that type the radius of the circular cutter at the point of cut was always perpendicular to the

tangent of the work—the ideal result—and that the arc of oscillation of the point of cut from above the horizontal plane, around the nose of the cam, and thence beneath such plane, was of much less degree than the arc of oscillation necessary in complainant's design. This observation did not solve the problem.

The principle of the Blanchard lathe produced reciprocating movement only, which was inoperative to cut with a single tool a nongeometric figure upon the revolving work, unless the tool were also given oscillating movement to maintain the normal angularity of the tool to the work. To produce this oscillation Melling turned to and appropriated the cam and bell crank lever construction of the complainant, thus producing the desired end by practically identical means used by Gordon. *Morley Machine Co. v. Lancaster*, 129 U. S. 263-281, 9 S. Ct. 299 (32 L. Ed. 715); *Cimiotti Unhairing Co. v. American Unhairing Machine Co.*, 115 F. 498-504 (C. C. A. 2); *Lourie Implement Co. v. Lenhart*, 130 F. 122, 129 (C. C. A. 8). This fact was suggested by the court below when the witness Melling was asked: "Well, didn't you get the suggestion of mounting the single cutter on an arm that in some way would rock, changing the relation of the cutter to the tangent of the work, from the Gordon and Redlin machine?" This question was not satisfactorily answered, and it is at least worthy of note that the means used bear such close functional and physical relationship to those employed by Gordon and Redlin, and that the organization involving their use did not occur to Melling until after he had inspected the complainant's machine in operation.

[6] As we have said, the elements of cam and bell crank lever to rock the tool, in combination with means for reciprocatory motion of the tool, constituted the essence of Gordon's inventive step. The patent is considered by us as a primary or generic one, and the claims are entitled to great liberality of construction. Doubtless the use of the Blanchard lathe principle to produce reciprocatory movement, the use of the circular guide plate of relatively large proportions, as compared with the work, and the resulting pivoting of the tool at a point substantially removed from its point, was a valuable improvement, which perhaps was patentable as such. But superiority of operation does not,

of necessity, negative infringement. *Schiebel Toy, etc., Co. v. Clark,* 217 F. 760, 771; *Toledo Mach. & Tool Co. v. E. W. Bliss Co.,* 287 F. 443, 447 (both C. C. A. 6). Applying the doctrine of broad equivalents properly applicable to generic patents, the variation between the conceptions of Gordon and Melling did not take the machines of Melling out of the domination of the claims awarded to Gordon and Redlin. *Hildreth v. Mastoras,* 257 U. S. 27, 36, 42 S. Ct. 20 (66 L. Ed. 112); *Temco Electric Motor Co. v. Apco Mfg. Co.,* 275 U. S. 319, 328, 48 S. Ct. 170 (72 L. Ed. 298); *Hoyt v. Horne,* 145 U. S. 302, 309, 12 S. Ct. 922 (36 L. Ed. 713); *Otto Coking Co. v. Koppers Co.,* 258 F. 122-135 (C. C. A. 3).

[7] Tersely expressed, our opinion is that Melling accomplished the same result as Gordon, perhaps more efficiently mechanically, but nevertheless by the employment of substantially the same means, or their equivalents, operating in substantially the same manner. This has universally been held to constitute infringement, and we so hold. *Union Paper Bag Machine Co. v. Murphy,* 97 U. S. 120, 24 L. Ed. 935; *Westinghouse v. Boyden Power Brake Co.,* 170 U. S. 537, 568, 569, 18 S. Ct. 707 (42 L. Ed. 1136); *Schiebel Toy & Novelty Co. v. Clark, supra; Allen v. Wingerter,* 17 F. (2d) 745, 747 (C. C. A. 3). Such decision is, of course, applicable to both defendant's cam cutting and crank shaft contour lathes, in both of which the patented combination of elements appears.

The judgment is reversed, so far as the finding of noninfringement is concerned, and the cause is remanded for further proceedings consistent with this opinion.

OPINION OF THE CIRCUIT COURT OF APPEALS FOR THE SIXTH CIRCUIT IN GORDON FORM LATHE CO. v. FORD MOTOR CO., NOS. 7363, 7364, DECIDED JANUARY 12, 1937, 87 FED. (2d) 390.

1. Patents Key 328

Patent No. 1,542,803, for tool-moving and tilting mechanism in lathe, *held* valid and infringed as to claims 1, 2, 28 to 30, 33, 34, 39 to 42.

2. Patents Key 328

Patent No. 1,542,803, claims 29 and 30, for tool-moving and tilting mechanism in lathe whereby work piece was rotated many times with great rapidity in cutting operation, *held* not infringed by milling machine having multiple cutting points applied to slowly revolving work piece.

3. Patents Key 178

Inventor cannot, by mere use of word "means," appropriate any other mechanism or device than that described in patent or its mechanical equivalent.

Appeal and Cross-Appeal from the District Court of the United States for the Eastern District of Michigan; Arthur J. Tuttle, Judge.

Suit by the Gordon Form Lathe Company against the Ford Motor Company for the infringement of a patent. From an adverse decree defendant appeals, and plaintiff cross-appeals on account of a ruling on his application for accounting of property damages.

Modified and cause remanded.

Drury W. Cooper, of New York City (I. Joseph Farley and Bodman, Longley, Bogle, Middleton & Farley, all of Detroit, Mich., on the brief), for appellant and cross-appellee.

F. O. Richey, of Cleveland, Ohio (John W. Michael, of Milwaukee, Wis., F. M. Bosworth, of Cleveland, Ohio, Lecher, Michael, Whyte & Spohn, of Milwaukee, Wis., and Richey & Watts, of Cleveland, Ohio, on the brief), for appellee and cross-appellant.

Before Hicks and Simons, Circuit Judges, and Raymond, District Judge.

Raymond, District Judge.

The bill charged defendant,[1] Ford Motor Company, with infringing claims 1, 2, 12, 23, 24, 28 to 30, 33, 34, and

---

[1] For brevity the parties are referred to herein as plaintiff and defendant as they were known in the court below.

38 to 42 of letters patent No. 1,542,803, issued June 16, 1925, to Gordon Form Lathe Company, upon application filed July 16, 1920, by Charles Gordon and Alfred W. Redlin. One of defendant's machines, known as the Walcott or Melling machine, was charged to infringe all of the claims enumerated, while another machine, known as the Pioch machine, was alleged to infringe claims 29 and 30. The defenses pleaded were invalidity and noninfringement. Defendant has appealed from the holding of the trial court that all of the claims involved were valid and that all were infringed by the Walcott machine, and that claims 29 and 30 were infringed by the Pioch machine. The cross-appeal relates to paragraph 5 of the decree which denies plaintiff's application for accounting of defendant's profits and of plaintiff's damages prior to June 13, 1929, and to paragraph 6, which denies application for increased damages under 35 U. S. C. §§ 67 and 70 (35 U. S. C. A. §§ 67, 70).

[1] Reference to prior litigation discloses the background of the present suit. The patent sued upon was involved in interference proceedings which terminated in the Court of Appeals of the District of Columbia, *Melling v. Gordon et al.*, 55 App. D. C. 278, 4 F. (2d) 945; in proceedings under Rev. St. § 4915 (35 U. S. C. A. § 63) to compel issuance of patent to plaintiff therein, *Melling v. Gordon Form Lathe Co.*, 14 F. (2d) 437 (D. C. Ohio); and in an appeal to this court, *Gordon Form Lathe Co. v. Walcott Mach. Co.*, 32 F. (2d) 55, which reviewed a decision of the District Court reported in 20 F. (2d) 673 (D. C. Mich.), which case on appeal determined the scope and validity of all the claims here involved excepting claims 12, 23, 24, and 38. These prior decisions render unnecessary detailed description of the Gordon and Walcott machines or restatement of the nature of the patent claims heretofore adjudicated. The Walcott machine here charged to infringe is the same as the one under consideration in the suit which was on appeal in this court. The principal issue relative thereto is whether the present record discloses additional prior art which so limits the scope of the patent claims in suit that the Walcott machine should now be held not to infringe.

For reasons similar to those indicated in the former opinion of this court, it is thought unnecessary to discuss claims 12, 23, 24 and 38.

Even brief discussion of all the asserted new prior art in the present record would unduly extend this opinion. Full consideration thereof brings conviction of its insufficiency to warrant modification of our previous conclusion that the patentees were pioneers in disclosing means for oscillating the tool in synchronism with its reciprocatory movements and the revolution of the work by the use of an appropriately shaped cam, moveable frame, and bell crank lever tool support for use in cutting nongeometric forms and that the Walcott machine is an infringement. Upon the present record, the Blanchard lathe and the Westinghouse machine are most relied upon. The first was fully discussed in our opinion in the former case, and it suffices to say that in the view of the court there is still nothing to justify interpretation of that patent as disclosing a tool which is tilted to maintain it in proper cutting position during the cutting of a nongeometric form. The Westinghouse machine relied upon was built and used in 1910. Westinghouse did not tilt the tool to maintain it in proper cutting position relative to the work. The record is clear that the product of the machine was far from perfect and that, notwithstanding the demand for a cam turning machine, its use was abandoned after cutting a comparatively small number of shafts.

The decree of the lower court relating to the Walcott machine is affirmed so far as it relates to findings of validity and infringement of all claims relied upon excepting claims 12, 23, 24, and 38.

[2, 3] The Pioch machine alleged to infringe claims 29 and 30 has not been before this court. It was designed in 1929 by an employee of defendant soon after the decision of this court holding the Walcott machine to infringe. Its use was to cut the pear shaped cams which are a part of the camshaft and which raise and lower the valves of the cylinders of an automobile engine. Because of the sharper points of the cams as they had for many years been used in defendant's engine, plaintiff was unable with its machine, after efforts extending over many months, to accomplish more than a very moderate degree of success. Due to the necessary rapid change of position of the tool relative to the work piece as the tool passed from the lower to the upper side of the pointed end of the cam, a cut or gouge was

frequently left on the lower side of the completed cam and an excess of material upon the upper side which resulted in a very considerable percentage of rejection, rendering it of dubious practical value in defendant's plant. Because of this inefficiency the Gordon machine was rejected by defendant after a long period of experimentation and the Walcott machine was substituted. Defendant used the Walcott machine until the decision of this court already referred to, whereupon the Pioch machine was developed and substituted. The issue involved in this branch of the case is whether the Pioch machine appropriated the mechanical principles disclosed by claims 29 and 30. They read:

"29. In a structure of the class described, the combination of a tool support, a tool mounted on said support for swinging movement, a pattern cam corresponding to the shape of the cam to be cut for controlling said support, and means for swinging said tool whereby its cutting position relative to the work is maintained as the work revolves.

"30. In a structure of the class described, the combination of a tool support, a tool mounted on said support for swinging movement, a pattern cam for the cam to be cut, said pattern cam being adapted to control said support, and means for swinging said tool in such wise as to maintain the same in proper cutting position relative to the work as the latter revolves."

In the *Gordon Form Lathe Company* suit, 32 F. (2d) 55, 58, this court stated "the precise inventive step of Gordon and Redlin would seem to lie in combining with the means for producing reciprocatory movement of the tool, old in the art, the means for controlling the oscillatory movement of such tool by a separate and specially designed cam, spring, and bell crank lever, in such organization that the means for both reciprocatory and oscillating movement, working in synchronism with each other and with the rotation of the work, could cut a cam, crank cheek, or other non-geometric form."

Whatever novelty exists in the combination of elements set forth in the claims relied upon resides in the "means" clause described as the last element of each claim, and this, under well-settled authority, must be limited to the element

in the combination as expressed in the specifications. An inventor cannot by the mere use of the word "means" appropriate any and all kinds of mechanism or devices which may perform the specified function, or any other mechanism or device than that which is described in the patent or which is its mechanical equivalent. See *Bettendorf Co. v. Ohio Steel Foundry Co.*, 56 F. (2d) 777 (C. C. A. 6); *Davis Sewing Machine Co. v. New Departure Mfg. Co.*, 217 F. 775, 782 (C. C. A. 6); *Portland Gold Mining Co. v. Hermann*, 160 F. 91, 99 (C. C. A. 8); *R. M. Hollingshead Co. v. Bassick Mfg. Co.*, 73 F. (2d) 543 (C. C. A. 6).

The Pioch machine is a milling machine and not a lathe as in Walcott. The cutting action results from the rotation of a milling cutter having twelve sharp edges or cutting teeth. The cutter is rotated with great rapidity during the milling operation. The work piece makes but a single revolution during the entire cutting operation, which consumes approximately forty seconds. The cutter is secured to the end of a shaft which is rotated by means of gears. This shaft is mounted for rotation in a tool carrying head mounted in a housing for reciprocal up and down movement. The housing is pivoted upon a shaft. The entire housing is swung across the contour of the work piece by the joint action of a cam groove formed in the side face of a cam and a roller which projects laterally from a projecting arm of the housing. Movement of the cutter towards and away from the axis of rotation of the work piece is under the control of the peripheral face of the cam, while the up and down motion of the cutter is controlled by a lever which at one end is provided with a roller that engages with the peripheral face of a cam. The twelve teeth on the cutter remain in substantially the same plane throughout the cutting operation. These teeth are built solidly into the cutting tool and there is no movement which changes their cutting position relative to the work, the only apparent exception being a sidewise motion which is given to the tool to cause it to cut the entire width of the work piece. There is no substantial difference in the angle at which any of the cutting edges of the teeth contact with the work piece. The slight tilting of the tool which results from the swinging of the tool head is on an arc of such radius that it produces no material effect on the cutting action of the

tool. It is apparent from the record and the design of the machine itself that the swinging motion is not for the purpose of maintaining the tool in "proper cutting position relative to the work as the latter revolves," within the meaning of the claims being considered. The slight tilting in the Pioch machine is not comparable to the tilt of the Gordon tool, which has for its sole purpose the maintenance of the tool in proper cutting position relative to the work. The cutting edges of the milling tool of Pioch remain fixed relative to the axis of rotation thereof. The swinging action is not of any effect whatsoever on changing the angle of the teeth of the milling cutter to the work presented to it, but is for the purpose of causing the narrower tool (necessitated by the number of cams to be cut simultaneously) to traverse the entire surface of the work to remove excess stock.

The record establishes that, while the Gordon machine was designed to cut cams and other nongeometric forms, it did not and could not, upon a sharp pointed cam, swing the cutting tool with sufficient speed and precision to maintain it in proper cutting position on the portions immediately above and below the point, nor could it be so reorganized as to accomplish the result while using a single cutting tool which tilted upon its point upon a rapidly revolving work piece. Pioch, by substitution of a milling cutter with multiple cutting points applied to a slowly revolving work piece, accomplished the desired result during one revolution of the work piece. The court is unable to find mechanical equivalency with Gordon in this operation. It appears from the record that, had it not been for the closeness of the cams on the camshaft of the Ford engines that were being produced when the Pioch machine was designed, a larger milling cutter could have been employed which would have rendered unnecessary any movement of the tool other than vertical. The Gordon machine is a lathe with a single point tool which cuts a narrow shaving at each rotation of the work, the work piece being rotated many times with great rapidity before the work is completed.

To accord to claims 29 and 30 the broad interpretation of the word "means" necessary to include the Pioch machine would be to grant a monopoly upon the functions of

the Gordon machine and would preclude not only every conceivable combination which would produce the results accomplished by it but also results not possible of accomplishment thereby. No infringement of claims 29 and 30 by the Pioch machine appears and the decree below should be modified accordingly.

Concerning the cross-appeal which challenges paragraphs 5 and 6 of the decree, it is our view, upon the authority of *Wine Railway Appliance Co. v. Enterprise Railway Equipment Co.*, 297 U. S. 387, 56 S. Ct. 528, 80 L. Ed. 736, and because of the apparent incompleteness of the record upon the issues involved, that all questions relating to the accounting should be postponed until after the return of the master's report. These paragraphs should therefore be stricken from the interlocutory decree appealed from.

The case will be remanded for further proceedings in conformity with this opinion. No costs will be awarded on this appeal.

FINAL JUDGMENT.

(Entered April 29, 1941 by Arthur J. Tuttle, Judge.)

This cause having been heard by this Court, and upon consideration thereof and upon arguments and briefs of counsel, and interlocutory decree of this Court entered thereon on the 20th day of November, 1934, and appeal of defendant and cross-appeal of plaintiff having been allowed to the Circuit Court of Appeals for the Sixth Circuit from said decree, and such appeals having been heard and disposed of, and said Circuit Court of Appeals having ordered and decreed that the said decree of this Court in this cause be modified and the cause remanded for further proceedings in conformity with the opinion of the Circuit Court of Appeals given January 12, 1937, and the further opinion and ruling of said Court given and entered June 4, 1937, and the mandate of said Court, issued February 19, 1937, having been recalled and amended, and this cause having been remanded to this Court on said amended mandate,

and referred to Donald L. Quaife, Esq., as Special Master, to take and report an account of the profits, gains and advantages which the defendant has derived, received, earned or saved by reason of defendant's infringement of said Letters Patent No. 1,542,803, and to compute and report a reasonable royalty for defendant's use of the invention of said Letters Patent, and to take evidence and report on the question of increase of damages, and the said Donald L. Quaife, Esq., having, pursuant to such reference, taken evidence upon such matters and made and filed with this Court his report thereon, and this cause having come on to be heard upon said report and upon the objections thereto filed on the part of plaintiff and defendant upon the motion of plaintiff duly made and entered herein, and said cause having been argued by counsel for the respective parties, and the Court having considered the written report of the Master made and filed herein, the arguments of counsel with respect to the objections thereto respectively taken and the briefs of counsel filed herein on said objections, and being fully advised in the premises, it is

ORDERED, ADJUDGED AND DECREED:

1. That the Decree on Mandate of this Court entered herein on or about the 28th day of June, 1937, be and the same is hereby vacated in favor of this decree which is substituted and entered in place thereof.

2. That Letters Patent of the United States to Charles Gordon and Alfred W. Redlin No. 1,542,803, issued June 16, 1925, for Lathe is good and valid in law as to Claims 1, 2, 28, 29, 30, 33, 34, 39, 40, 41 and 42; that the inventors, Charles Gordon and Alfred W. Redlin, named in the patent were the first, true, original and joint inventors of the inventions, improvements and combinations described therein; and that the plaintiff, The Gordon Form Lathe Company, is the lawful owner of the entire right, title and interest in and to said inventions, improvements and combinations and in and to said Letters Patent therefor, as aforesaid, and has full standing in equity with respect to the issues involved in this suit.

3. That defendant, Ford Motor Company, has infringed the United States Letters Patent No. 1,542,803 to Gordon and Redlin and Claims 1, 2, 28, 29, 30, 33, 34, 39,

40, 41 and 42 thereof and has violated the exclusive rights of the plaintiff thereunder by the use of machines known in this record as the Melling or Walcott machine and illustrated in Exhibit 21 (drawings of the Melling machine marked B-1, B-2, B-3 and B-4).

4. That defendant, Ford Motor Company, has not infringed the United States Letters Patent No. 1,542,803 to Gordon and Redlin and Claims 29 and 30 of said Gordon and Redlin patent by the manufacture and use of machines known as the Pioch machine illustrated in Plaintiff's Exhibits 23, 24, 25, 44 and 114.

5. That a Writ of Injunction issue out of and under the seal of this Court directed to the said defendant, Ford Motor Company, its officers, agents, attorneys, employees, associates and privies enjoining and restraining it and them and each of them, from directly or indirectly infringing any of the claims 1, 2, 28, 29, 30, 33, 34, 39, 40, 41 and 42 of said Letters Patent and particularly from making or selling or using any machines like those illustrated in Exhibit 21 (drawings of the Melling machine marked B-1, B-2, B-3 and B-4), or any apparatus or devices covered by or containing or embodying any of the inventions defined in any of said claims, and from offering or advertising so to do, and from aiding or abetting others or in any way contributing to the infringement of any of said Claims 1, 2, 28, 29, 30, 33, 34, 39, 40, 41 and 42 of said Letters Patent.

6. That the bill of complaint is dismissed without prejudice as to Claims 12, 23, 24 and 38.

7. That the report of the Special Master is adopted in each and every respect excepting only as to that part thereof which allows and awards plaintiff the sum of $120,625.89 as savings on overhead, and as to such overhead savings his report is modified by striking such saving therefrom.

8. That all of the objections of plaintiff are overruled and all of the objections of defendant are overruled except objection No. 13 which is allowed.

9. That the plaintiff recover from the defendant, Ford Motor Company, the profits which it has derived, received, earned or saved by reason of defendant's infringement of said Letters Patent No. 1,542,803 in the amount of

$86,198.33; or, at plaintiff's election, the general damages which plaintiff has sustained by reason of defendant's infringement of said Letters Patent in the amount of $120,000.00, said sum of $120,000.00 having been found by the Master to be a reasonable royalty for defendant's use of the invention of plaintiff's Letters Patent.

10. That the plaintiff recover from defendant interest on said profits in the amount of $661.25, or if it elects to take general damages then interest on said general damages in the amount of $920.56, said interest being computed at the rate of five percent (5%) per annum from March 3, 1941, the date of the filing of the Master's report herein, to the date hereof.

11. That this decree shall carry interest on the amount thereof until the same is paid at the rate of five percent (5%) per annum.

12. That the plaintiff recover from defendant its costs incurred in this case subsequent to June 28, 1937, the same to be taxed.

13. That execution be issued for collection of the aforesaid profits or damages, interest and costs.

ARTHUR J. TUTTLE, (signed)
United States District Judge.

Detroit, Michigan,
April 29, 1941.

Approved as to form:

GEORGE REX FRYE, (signed)
SWAN, FRYE & HARDESTY, (signed)
Of Counsel for Plaintiff.

I. JOSEPH FARLEY, (signed)
BODMAN, LONGLEY, BOGLE, MIDDLETON & FARLEY, (signed)
Counsel for Defendant.

NOTICE OF APPEAL OF PLAINTIFF.

(Filed April 30, 1941.)

NOTICE IS HEREBY GIVEN that THE GORDON FORM LATHE COMPANY, a corporation, plaintiff above named, hereby appeals to the Circuit Court of Appeals for the Sixth Circuit from those portions of the Final Judgment entered herein on or about April 29, 1941, as follows:—

(1) From paragraph 7 of the decree—

"That the report of the Special Master is adopted in each and every respect excepting only as to that part thereof which allows and awards plaintiff the sum of $120,625.89 as savings on overhead, and as to such overhead savings his report is modified by striking such saving therefrom."

(2) From paragraph 8 of the decree—

"That all of the objections of plaintiff are overruled and * * * objection 13 (of defendant) * * * is allowed."

(3) From paragraph 9 of the decree—

"That the plaintiff recover from the defendant, Ford Motor Company, the profits which it has derived, received, earned or saved by reason of defendant's infringement of said Letters Patent No. 1,542,803 in the amount of $86,198.33; or, at plaintiff's election, the general damages which plaintiff has sustained by reason of defendant's infringement of said Letters Patent in the amount of $120,000.00, said sum of $120,000.00 having been found by the Master to be a reasonable royalty for defendant's use of the invention of plaintiff's Letters Patent."

(4) From paragraph 10 of the decree—

"That the plaintiff recover from defendant interest on said profits in the amount of $661.25, or if it elects to take general damages then interest on said general damages in the amount of $920.56, said interest being computed at the rate of five percent (5%) per annum from March 3, 1941, the date of the filing of the Master's report herein, to the date hereof."

B. D. WATTS,
RICHEY & WATTS,
Of Counsel for Plaintiff.

GEORGE REX FRYE,
Solicitor for Plaintiff.

Dated: April 30, 1941.

BOND ON APPEAL OF PLAINTIFF.

(Filed April 30, 1941.)

KNOW ALL MEN BY THESE PRESENTS That we, The Gordon Form Lathe Company, a Corporation of Ohio, as principal, and Fidelity & Deposit Company of Maryland, a Corporation organized and existing under the laws of the State of Maryland and authorized to do business within the State of Michigan, as Surety, are held and firmly bound unto Ford Motor Company, a Corporation of Delaware, in the full and just sum of Two Hundred and Fifty Dollars ($250.00) for the payment of which well and truly to be made, we bind ourselves, our successors and assigns, jointly and severally, firmly by these presents.

Sealed with our seals and dated this 30th day of April, 1941.

WHEREAS, lately, at a session of the District Court of the United States for the Eastern District of Michigan, Southern Division, in the above entitled cause pending in said Court between the said The Gordon Form Lathe Company, Plaintiff, and Ford Motor Company, Defendant, final judgment was rendered in favor of Plaintiff but which in part denied Plaintiff certain recoveries, and the said Plaintiff is about to file a notice of appeal to the United States Circuit Court of Appeals for the Sixth Circuit.

Now, the condition of the above obligation is such that if the said The Gordon Form Lathe Company shall answer all costs if it fails to make good its appeal, then the above obligation to be void, otherwise to remain in full force and virtue.

THE GORDON FORM LATHE COMPANY,
By CHAS. GORDON, (Seal)
President.

FIDELITY & DEPOSIT COMPANY OF MARYLAND,
By E. J. HAMMEL, (Seal)
Attorney-in-Fact.

Taken and Approved this 30th day of April, 1941.

ARTHUR J. TUTTLE,
United States District Judge.

PLAINTIFF'S STATEMENT OF POINTS TO BE URGED ON APPEAL.

(Filed April 30, 1941.)

Now Comes The Gordon Form Lathe Company, a Corporation, plaintiff in the above entitled cause, and in pursuance of and obedience to the Rules of Civil Procedure for the District Courts of the United States and the Rules of the United States Circuit Court of Appeals for the Sixth Circuit, in such cases made and provided, sets out the following statement of points on which it intends to rely on its appeal from the decree entered on or about the 29 day of April, 1941, in said cause:

1. The Landis grinder is the only acceptable standard of comparison for measuring defendant's profits, savings, gains and advantages attributable to its use of the infringing Walcott machines on its production of Model A cam shafts.

2. The cases cited in the Master's report in support of his adoption of a modified shaper as the proper standard of comparison in measuring defendant's profits, savings, gains and advantages attributable to its use of the infringing Walcott machines on its production of Model A cam shafts, do not support the adoption of such standard in this case.

3. Under applicable law neither the Ford cam shaper nor any modification thereof may be regarded as a proper standard of comparison for measuring defendant's profits, savings, gains and advantages attributable to its use of the infringing Walcott machines on its production of Model A cam shafts.

4. In the alternative and without prejudice to any of the foregoing, the double shaper method (two Ford cam shapers to machine each shaft) is the only proper standard of comparison for measuring the defendant's profits, savings, gains and advantages attributable to its use of the infringing Walcott machines on its Model A production, if under applicable law the Ford cam shaper may be regarded at all as a proper standard of comparison.

5. Plaintiff is entitled to recover the savings, gains and advantages in overhead or burden realized by defend-

ant in the use of the infringing Melling or Walcott machines.

6. The general damages which plaintiff sustained by reason of defendant's infringement of said Letters Patent as a reasonable royalty is wholly inadequate.

THE GORDON FORM LATHE COMPANY,
RICHEY & WATTS,
By B. D. WATTS,
Of Counsel.

GEORGE REX FRYE,
Solicitor for Plaintiff.

Dated: April 30, 1941.

NOTICE OF APPEAL OF DEFENDANT.

(Filed July 2, 1941.)

NOTICE IS HEREBY GIVEN that FORD MOTOR COMPANY, a corporation defendant above named, hereby appeals to the Circuit Court of Appeals for the Sixth Circuit from those portions of the Final Judgment entered in this action on April 29th, 1941, as follows:

1. From so much of paragraph (7) of the Final Judgment reading as follows:

> That the report of the Special Master is adopted in each and every respect * * *.

2. From so much of paragraph (8) of the Final Judgment reading as follows:

> That * * * all the objections of the defendant are overruled * * *.

3. From paragraph (9) of the Final Judgment reading as follows:

> That the plaintiff recover from the defendant, Ford Motor Company, the profits which it has derived, received, earned or saved by reason of defendant's infringement of said Letters Patent No. 1,542,803 in the amount of $86,198.33; or, at plaintiff's election, the general damages which plaintiff has sustained by reason of defendant's infringement of said Letters Patent in the amount of $120,000.00, said sum of $120,000.00 having been found by the Master to be a reasonable royalty for defendant's use of the invention of plaintiff's Letters Patent.

4. From paragraph (10) of the Final Judgment reading as follows:

> That the plaintiff recover from defendant interest on said profits in the amount of $661.25, or if it elects to take general damages then interest on said general damages in the amount of $920.56, said interest being computed at the rate of five percent (5%) per annum from March 3, 1941, the date of the filing of the Master's report herein, to the date hereof.

5. From paragraph (11) of the Final Judgment reading as follows:

That this decree shall carry interest on the amount thereof until the same is paid at the rate of five percent (5%) per annum.

6. From paragraph (12) of the Final Judgment reading as follows:

That the plaintiff recover from defendant its costs incurred in this case subsequent to June 28, 1937, the same to be taxed.

7. From paragraph (13) of the Final Judgment reading as follows:

That execution be issued for collection of the aforesaid profits or damages, interest and costs.

BODMAN, LONGLEY, BOGLE, MIDDLETON & FARLEY.

Jul 2 1941.

Service of a copy of the foregoing NOTICE OF APPEAL is acknowledged this 2d day of July, 1941.

GEORGE REX FRYE (sgd),
Counsel for Plff.

BOND ON APPEAL OF DEFENDANT.

(Filed July 2, 1941.)

KNOW ALL MEN BY THESE PRESENTS That we, Ford Motor Company, a Corporation of Delaware, as principal, and American Employers' Insurance Company of Massachusetts, a Corporation organized and existing under the laws of the State of Massachusetts and authorized to do business within the State of Michigan as Surety, are held and firmly bound unto The Gordon Form Lathe Company, a Corporation of Ohio, in the full and just sum of Two Hundred and Fifty Dollars ($250.00) for the payment of which well and truly to be made, we bind ourselves, our successors and assigns, jointly and severally, firmly by these presents.

Sealed with our seals and dated this 2nd day of July, 1941.

WHEREAS, lately, at a session of the District Court of the United States for the Eastern District of Michigan, Southern Division, in the above entitled cause pending in said Court between the said The Gordon Form Lathe Company, Plaintiff, and Ford Motor Company, Defendant, final judgment was rendered in favor of Plaintiff but which in part denied Defendant certain relief, and the said Defendant is about to file a notice of appeal to the United States Circuit Court of Appeals for the Sixth Circuit.

Now, the condition of the above obligation is such that if the said Ford Motor Company shall answer all costs if it fails to make good its appeal, then the above obligation to be void, otherwise to remain in full force and effect.

FORD MOTOR COMPANY,
By B. J. CRAIG. (Sgd.)

AMERICAN EMPLOYERS' INSURANCE COMPANY,
By F. J. HAGEN. (Sgd.)

Taken and approved this 2 day of July, 1941.

ARTHUR J. TUTTLE (Sgd.),
United States District Judge.

Service of a copy of the foregoing BOND is acknowledged this 2nd day of July, 1941.

GEORGE REX FRYE (Sgd.)
Counsel for Plff.

DEFENDANT'S STATEMENT OF POINTS TO BE RELIED ON UPON APPEAL UNDER RULE 75 (d) OF RULES OF CIVIL PROCEDURE.

(Filed July 2, 1941.)

(1) The burden was on plaintiff to prove both damages and profits from the use, as a part of the Walcott machine held to infringe, of the tilting tool, and plaintiff did not sustain it.

(2) The Court erred in holding that plaintiff is entitled to all of defendant's profits, in the face of the determination by the Court of Appeals that the machine of the patent in suit was not usable by defendant for cutting its cam shafts, and in the face of the uncontradicted testimony that the infringing machines were usable by defendant only by reason of the inclusion therein of additional patented improvements covered by the Melling patents, Exhibits 209 and 312.

(3) The Court erred in holding that plaintiff is entitled to all the profits in face of uncontroverted evidence that such profits resulted from inventions other than those of the patent in suit and plaintiff failed to meet its burden of proof by offering any evidence on the subject of apportionment.

(4) The Court should have held that the use of the essential element of the patent in suit, to-wit, a tilting tool, was not necessary to the functioning of the infringing machines, since the uncontroverted testimony is that such machines would perform their function at least as well when provided with non-tilting tools.

(5) The Court erred in holding that the modified Walcott or Melling machine, with a non-tilting tool, is not a proper standard of comparison.

(6) The defendant's cam shaft shaper, having been accepted as a proper standard of comparison for the machining of defendant's Model T and Model A cam shafts, should also have been held a proper standard of comparison for the defendant's Model F tractor cam shaft.

(7) The Court should have allowed to defendant the cost of the added straightening operation employed by defendant in using the infringing machines in the computa-

tion of alleged profits from such use; such operation having been actually employed there, but not when using the shapers which constituted the accepted standard of comparison.

(8) The Court should not have calculated an eighteen per cent (18%) reduction in the output of shafts per hour in the use of the Ford cam shaper for machining Model A cam shafts, since that is contrary to the uncontroverted testimony on the accounting.

(9) The Court should not have accepted the computation of costs for rough grinding Model F tractor cam shafts based upon an assumed life of a grinding wheel for grinding only fifty cam shafts; whereas on the accounting the plaintiff accepted fifty-five hours' life, for the grinding of 440 cam shafts.

(10) The plaintiff having manufactured and sold the machine of the patent in suit and licensed others so to do and having stood idly by and quiescent with full knowledge of defendant's use of the infringing machines, the accounting period should date from June 13, 1929, the date of plaintiff's first actual and sufficient notice to defendant, and not from June 16, 1925, the date of issuance of the patent in suit.

(11) There is no basis for the acceptance of the sum of Five Thousand Dollars ($5,000.00) per machine as a reasonable royalty, in the absence of supporting evidence and in the face of the patentee's acceptance of ten per cent (10%) of the sales price as a royalty for the use of the patented invention on all machines actually sold by plaintiff.

(12) The Court should not have accepted the sum of Five Thousand Dollars ($5,000.00) per machine as a reasonable royalty, utilizing contracts in settlement for past infringement as a means for arriving at such figure.

(13) There is no basis for any award except of nominal damages, in view of the fact that plaintiff effected a settlement with Walcott Machine Tool Company, the manufacturer of defendant's infringing machine, and from which defendant purchased such machines under a guarantee of which the plaintiff had full notice at the time of making such settlement.

(14) There should be no recovery to plaintiff except of nominal damages, because plaintiff offered no evidence to establish damage and defendant has not been shown to have earned any profits from the use of that single element in the machine which is covered by the patent in suit.

FORD MOTOR COMPANY,

By BODMAN, LONGLEY, BOGLE, MIDDLETON & FARLEY.

July 2, 1941.

Service of a copy of the foregoing DEFENDANT'S STATEMENT OF POINTS TO BE RELIED ON UPON APPEAL UNDER RULE 75(d) OF RULES OF CIVIL PROCEDURE is acknowledged this 2nd day of July, 1941.

GEORGE REX FRYE (sgd.),
Of Counsel for Plaintiff.

STIPULATION RE WAIVER OF SUPERSEDEAS BOND.

(Dated June 27, 1941.)

IT IS HEREBY STIPULATED by and between counsel for the respective parties, that the filing of a Supersedeas Bond by defendant is waived.

RICHEY & WATTS,
Counsel for Plaintiff.

BODMAN, LONGLEY, BOGLE, MIDDLETON & FARLEY,
Counsel for Defendant.

Dated: June 27, 1941.

STIPULATION CONCERNING NUMBER OF COPIES OF RECORD TO BE FILED ON APPEAL.

(Dated July 19, 1941.)

IT IS HEREBY STIPULATED, by and between the parties hereto, through their respective counsel, this Honorable Court consenting, that because the record in this case is quite voluminous and for the purpose of reducing the cost of the printed record, that the parties' exhibits be filed in books separate from the testimony and other pleadings and papers in this cause and that the following number of copies of each set of books be filed herein:

25 copies of the testimony, pleadings and other papers.
10 copies of the parties' exhibits.

LECHER, MICHAEL, WHYTE & SPOHN,
Counsel for Plaintiff.

BODMAN, LONGLEY, BOGLE, MIDDLETON & FARLEY,
Counsel for Defendant.

Dated: July 19, 1941.

STIPULATION RE EXHIBITS AND TRANSCRIPT OF RECORD ON APPEAL IN GORDON v. FORD NOS. 7363-4.

(Dated July 21, 1941.)

IT IS HEREBY STIPULATED AND AGREED by and between the parties hereto, through their respective counsel:

1. That the consolidated printed transcript of record on appeal and cross-appeal (Vol. I, pages 1-466, and Vol. II, pages 467-957) in the case of Ford Motor Company, Appellant and Cross-Appellee, vs. Gordon Form Lathe Company, Appellee and Cross-Appellant, Nos. 7363-4, in the United States Circuit Court of Appeals for the Sixth Circuit, shall be considered as and constitute a joint exhibit herein, and that three (3) copies of said record shall be transmitted to the United States Circuit Court of Appeals for the Sixth Circuit along with the printed transcript of record on appeal herein; and

2. That all of the other exhibits herein, both plaintiff's and defendant's, and all of the exhibits referred to in the printed transcript of record identified in paragraph 1 hereof, excepting those included and listed in the stipulated designation of contents of plaintiff-defendant composite record on appeal herein, may, with the consent of the Court, all be considered and certified as physical exhibits to be retained in the custody of counsel subject to inspection at all reasonable times by opposing counsel and to be produced at all arguments and proceedings of the United States Circuit Court of Appeals for the Sixth Circuit in connection with the appeals heretofore filed herein.

(sgd) LECHER, MICHAEL, WHYTE & SPOHN,
Counsel for Plaintiff.

BODMAN, LONGLEY, BOGLE, MIDDLETON & FARLEY,
Counsel for Defendant.

Dated: July 21, 1941.

ORDER RE EXHIBITS AND TRANSCRIPT OF RECORD ON APPEAL IN GORDON v. FORD NOS. 7363-4.

(Entered July 23, 1941 by Arthur J. Tuttle, Judge.)

Pursuant to stipulation filed herein, IT IS ORDERED:

1. That the record on the appeal of plaintiff and the record on the appeal of defendant from the Judgment of this Court which was signed and entered on the 29th day of April, 1941, shall be consolidated in one transcript of record.

2. That the consolidated printed transcript of record on appeal and cross-appeal (Vol. I, pages 1-466, and Vol. II, pages 467-957) in the case of Ford Motor Company, Appellant and Cross-Appellee, vs. Gordon Form Lathe Company, Appellee and Cross-Appellant, Nos. 7363-4, in the United States Circuit Court of Appeals for the Sixth Circuit, shall be considered as and constitute a joint exhibit herein, and that three (3) copies of said record shall be transmitted to the United States Circuit Court of Appeals for the Sixth Circuit along with the printed transcript of record on appeal herein.

3. That all of the other exhibits herein, both plaintiff's and defendant's, and all of the exhibits referred to in the printed transcript of record identified in paragraph 2 hereof, excepting those included and listed in the stipulated designation of contents of plaintiff-defendant composite record on appeal herein, may, with the consent of the Court, all be considered and certified as physical exhibits to be retained in the custody of counsel subject to inspection at all reasonable times by opposing counsel and to be produced at all arguments and proceedings of the United States Circuit Court of Appeals for the Sixth Circuit in connection with the appeals heretofore filed herein.

4. That said exhibits shall be certified to the United States Circuit Court of Appeals for the Sixth Circuit as physical exhibits in connection with the appeals of the parties to this suit for use on all arguments and proceedings in connection with said appeals, and that they shall be returned to this Court after the decision of the cause on said appeals unless otherwise ordered by the Circuit Court of Appeals.

TUTTLE,
United States District Judge.

Dated: July 23, 1941.

STIPULATED DESIGNATION OF CONTENTS OF PLAINTIFF-DEFENDANT COMPOSITE RECORD ON APPEAL.

(Dated September 4, 1941.)

To the Clerk of the above-named Court:

SIR:

In the above entitled cause please prepare, certify and transmit to the Circuit Court of Appeals for the Sixth Circuit, pursuant to the notice of appeal heretofore filed herein, and pursuant to stipulation of the parties, the following designated portions of the record, proceedings and evidence, to be contained in and to constitute the record on appeal:

1. Decree on Mandate dated June 28, 1937.
2. Master's report.
3. Clerk's notice dated March 3, 1941, of the filing of the Master's report.
4. Plaintiff's objections thereto.
5. Defendant's objections thereto.
6. Motion for action upon Master's report and objections thereto, together with affidavit of Todd L. Moise and exhibits filed therewith.
7. Notice of Motion.
8. Opinion of the Hon. Arthur J. Tuttle, District Judge, on the objections to the Master's report.
9. The following portions of the pleadings, evidence and proceedings had upon the accounting before the Master:

(a) "MASTER'S ORDER FOR STATEMENT OF ACCOUNT" July 6, 1937. Paragraphs 1 and 2, 15, 16, 17, 19, 20, 25, 26, 27, 28, 30, 31, 32, 34 to 40 inc., 42 to 44 inc., 45, 49, 47, 50, all of 53.

(b) EXHIBIT A—DEFENDANT'S STATEMENT OF ACCOUNT—including Exhibits 7, 10, 11 and 12, attached to Exhibit A. Answers to numbered paragraphs above tabulated.

(c) EXHIBIT B—AMENDMENT TO DEFENDANT'S STATEMENT OF ACCOUNT. Paragraphs 2, 27, 30, 34, 44, 45, 53(6).

(Ptf. Rec. Vol. III beginning line 18, page 29.)

(d) Mr. Spohn: Now, if your Honor please, as Mr. Watts has pointed out, the statements of account filed by the defendant in this case under the rule are pleadings. There are three statements of account and they have been designated for purposes of identification for cross examination as Exhibits A, B, and C. Exhibit A being the first statement of account, and B being an amended statement of account, and Exhibit C being defendant's further statement of account.

These statements of account, as I say, are pleadings. Plaintiff admits some of the facts therein stated and denies others, and of course as to those denied puts defendant to its proof, and it is my purpose now to advise the Court and counsel for defendant what portions of these three accounts are admitted by the plaintiff and what portions of these accounts are denied, and when I say "admitted" may that be understood as accepted by the plaintiff, and when I say "denied" may it be understood as meaning rejected by the plaintiff, and I am going to go through this slowly. There are 53 questions involved in the first account, the answers to which in some instances were amended, in the amended account.

Question No. 1 is admitted. The answer is admitted.

Question No. 2, the answer as amended, is admitted.

Question No. 15, plaintiff admits the first sentence of the answer and denies the balance of the answer to that question.

Question No. 16, plaintiff admits the answer.

Question No. 17, plaintiff admits the answer.

Question No. 19, plaintiff admits the answer.

Question No. 20, plaintiff admits the first paragraph of the answer and rejects all the material in the second paragraph of the answer, that material following the words, "is attached hereto and marked Exhibit 6."

Question No. 25, plaintiff admits the answer.

Question No. 26, plaintiff admits the answer.

Question No. 27, plaintiff admits the amended answer, excepting only that portion thereof reading as follows, which portion of the answer plaintiff denies:

"No permanent actual cost records were kept by defendant with respect to the cost of machining the cams of the model T cam shaft on the cam shaft shapers, defendant's accounting practice in this respect being fully described in paragraph 20 hereof to which reference is here made. The cost of machining the model T cam shafts, T-410, has been compiled from such records as are available and is annexed hereto and marked Exhibit 9."

Question No. 28, plaintiff admits the answer.

Question No. 30, plaintiff denies both the original answer and the amendment to the answer.

Question No. 31, plaintiff admits the answer.

Question No. 32, plaintiff admits the answer.

Question No. 34, plaintiff admits defendant's original answer to question 34 and denies the amended answer.

Question No. 35, plaintiff admits the answer excepting the following portion of the answer which plaintiff denies: "(a) A Gordon lathe as disclosed in Plaintiff's Exhibit 2, Patent No. 1,542,803 to Charles Gordon and Alfred W. Redlin."

Question No. 36, plaintiff denies the answer.

Questions 37, 38, 39, 40, 42, 43, plaintiff denies defendant's answer.

Question 44, plaintiff denies the defendant's answer in its original statement of account and also as amended.

Question No. 45, plaintiff admits defendant's amended answer, excepting only computation of costs and elements of costs as designated by defendant on Exhibit 12 therein referred to.

Question No. 47, plaintiff accepts defendant's answer.

Question No. 49, plaintiff denies the answer.

Question No. 50, plaintiff admits the answer.

Question 53, plaintiff accepts the answer and admits the same, but denies the basis and methods therein set forth.

(e) Master's "Order for Statement of Account" Dated October 29, 1937. Paragraphs 1 to 5 inclusive, 8, 9, 10.

DEFENDANT'S FURTHER STATEMENT OF ACCOUNT.

(f) Pages 1-7, Exhibit C.
Pages 8 and 9, Exhibit C[1].
Pages 10, 11, and 12, Exhibit C.
Page 17, Exhibit C[1], except last two lines referring to Westinghouse.
Page 18, Exhibit C, Paragraph 2A, first paragraph of paragraph 2B.
Page 18, Exhibit C, Paragraph 2c to "comparison" in line 4 thereof, inserting period after "comparison" and canceling remainder of this paragraph.
Page 18, Exhibit C, Paragraph 3.
Page 18, Exhibit C, Paragraph 4, first sentence.
Page 19, Exhibit C, all of page except lines 1 to 6, and line 7 to period.
Pages 20, 21, 22, Exhibit C.
Pages 23 and 24, Exhibit C[1].
Pages 25 and 26, Exhibit C.
Pages 30, 31, Exhibit C.

(Ptf. Rec. Vol. III from page 34, line 26 to page 37, line 3 inclusive.)

(g) Mr. Spohn: Now with respect to the defendant's further statement of account which has been identified for the purposes of cross examination as Exhibit C, the plaintiff denies all the material in paragraph 1, page 1, denies all the material on schedule 1, sheet 1, and the whole page. Denies all of the material on schedule 1, sheet 2, page 3. Denies all of the material on sheet 3 of schedule 1, page 4, of the report. Denies all of the material on sheet 4 of schedule 1, page 5, of the report. Denies all of the material, sheet 5, schedule 1, page 6. Denies all of the material on sheet 6, schedule 1, page 7. Denies all of the material on sheet 1, schedule 2, page 8. Denies all of the material, sheet 2, schedule 2, page 9. Denies all of the material, sheet 3, schedule 2, page 10. Denies all of the material, sheet 4, schedule 2, page 11. Denies all of the material, sheet 5, schedule 2, page 12. Denies all of the material, schedule 4, page 17. Admits defend-

ant's answer 2-A, in parentheses, on page 18, and denies defendant's answer 2-B and 2-C, appearing on page 18, and denies the answer to paragraph 3 appearing on page 18. Accepts the answer to the first sentence of paragraph 4 appearing on page 18.

Denies the answer to paragraph 5 appearing on page 19 and all the material, including the heading reading as follows, and thereafter set forth on that page: "Description of means and methods used in computing schedule 1."

Denies all the material appearing on pages 20, 21, 22, 23, 24, 25, and 26.

Plaintiff rejects Exhibits 13 and 14 referred to in the answer to paragraph 7 appearing on page 29, also rejects the following portion of that answer, (b) model a cam shaft—is attached hereto marked Exhibit 16, and (c) tractor cam shafts—is attached hereto marked Exhibit 17.

Plaintiff also denies and rejects so much of the following sentence as refers to Exhibits 13, 14, 16 and 17: "The operation sheets attached hereto and marked Exhibits 13 to 17 inclusive, are the only operation sheets which could be found after a most exhaustive search through all available records of defendant."

Plaintiff rejects the last sentence of the answer appearing on page 29, commencing with the words: "Exhibit 13," and except as herein qualified and rejected, plaintiff accepts the answer.

Plaintiff accepts defendant's answer to question 8 appearing on page 30. Also the plaintiff accepts the defendant's answer to question 9 appearing on page 30.

Plaintiff also accepts defendant's answer to question 10 appearing on page 31.

(h) THE FOLLOWING PORTIONS OF THE STENOGRAPHER'S TRANSCRIPT OF TESTIMONY DESIGNATED BY BOTH PLAINTIFF AND DEFENDANT.

(Note: P-I, P-II, P-III, etc., and D-I, D-II, etc., in this designation indicate the bound volumes of the Stenographer's Transcript of Testimony as chronologically taken and transcribed on behalf of Plaintiff and Defendant, respectively.)

		Beginning		*Ending*	
Witness	*Volume*	*Line*	*Page*	*Line*	*Page*
Hovis	P-I	6	3	1	7
		10	7	15	9
		10	17	18	18
		3	19	7	19
		23	23	3	24
		24	24	9	25
		10	25	last line	27
		2	30	10	32
		25	34	11	35
		4	37	9	40
		13	41	23	41
		8	43	6	46
		1	48	2	48
		16	49	3	55
		13	55	17	55
		5	56	1	60
		4	60	20	62
Woehrle	P-I	12	67	18	71
		18	80	16	81
		13	98	23	98
		11	105	14	106
		6	111	22	111
		23	111	13	112
		27	112	21	114
Hovis	P-I	10	115	22	116
Woehrle	P-I	23	116	9	118
		10	118	19	120
		6	124	14	125
		26	150	4	153
		1	155	2	156
		26	157	6	160

Witness	Volume	Beginning Line	Beginning Page	Ending Line	Ending Page
		14	162	25	164
		1	166	8	174
		9	174	4	175
		23	184	1	186
		21	186	22	187
		23	187	all	192
Hovis	P-II	5	198	17	198
		15	200	17	201
Woehrle	P-II	10	205	11	205
		1	206	23	210
		7	245	23	245
		16	257	17	257
		18	257	12	259
		18	261	7	262
		7	269	13	272
Scovill	P-II	19	275	22	276
		2	294	19	294
Moise	P-III	5	44	21	47
		1	57	2	59
		1	62	26	62
		20	65	2	66
		3	66	20	67
		14	76	2	81
		7	81	1	88
		14	97	17	100
		12	101	15	101
		15	103	22	105
		21	123	11	125
		13	133	20	133
		12	139	19	141
		19	146	12	147
Gordon	P-III	21	152	17	154
		6	163	17	164
		18	164	26	164
		22	173	last line	173
		1	174	4	177
		5	177	7	177
		1	178	24	180
		1	204	5	205
		7	205	11	205

Witness	Volume	Beginning Line	Beginning Page	Ending Line	Ending Page
		7	207	25	207
		9	209	11	209
		12	210	4	213
		14	214	13	216
		1	217	11	217
		1	218	27	222
Broughton		11	236	1	244
		10	246	17	246
		1	247	5	247
		1	257	2	257
		24	257	4	258
Jones	P-IV	4	261	15	263
		11	273	1	277
		9	277	10	277
		11	277	13	279
		25	279	4	281
		7	281	8	281
		9	281	10	283
		13	283	14	283
		15	283	2	284
Sloniker	P-V	6	289	17	294
		7	297	12	298
		5	300	1	302
		3	302	17	302
		18	310	5	315
		14	318	1	320
		21	320	21	320
		20	343	8	344
Gordon	D-I	17	5	19	7
		22	8	16	11
		9	12	15	12
		19	12	22	13
		7	14	22	14
		1	17	15	19
		20	45	10	48
		17	48	19	89
		16	95	14	147
		10	148	29	151
		1	152	12	165
		27	165	10 (period)	179

		Beginning		Ending	
Witness	*Volume*	*Line*	*Page*	*Line*	*Page*
		26	180	20 (period)	183
		2	184	2	188
		7	188	11	194
		14	194	2	201
Moise		20	202	26	202
		1	228	last line	229
		21	232	4	233
		20	245	6	246
		1	247	11	248
Shawkey		7	269	26	282
Libby		1	283	26	283
		9	284	22	285
		11	286	last line	310
Shawkey		8	311	20	321
		5	322	12	324
		5	335	28	336
Klopsic		6	337	11	356
		3	373	26	376
Myers	D-II	2	431	21	434
		26	479	6	484
Marentette		21	487	12	501
Counsel		16	503	23	503
Wibel		11	522	14	522
		23	551	14	555
		24	556	21	564
		15	565	6	574
		14	577	22	577
		23	577	9	578
Gordon	D-III	1	742	8	744
Dahl		9	744	22	749
		23	755	7	756
		6	758	22	763
		10	764	21	767
		4	768	21	772
Smith		1	773	3	775
Counsel		4	879	last line	880
Aptekar		1st line	881	22	900
		last line	910	17	913
		1	914	15	934

Witness	Volume	Beginning Line	Beginning Page	Ending Line	Ending Page
Hunt		16	934	22	936
		15	949	12	960
Pillinger		14	962	9	966
		3	970	23	973
		23	974	19	976
		25	981	11	995
		15	999	23	1003
		27	1003	16	1006
Schmidt		2	1009	last line	1032
Herklotz	D-IV	6	1034	4	1035
		26	1055	5	1059
		20	1063	19	1065
		9	1068	28	1082
		10	1083	24	1092
		11	1093	last	1093
		22	1096	24	1098
		22	1101	last	1103
Pioch		3	1110	14	1121
				(period)	
		25	1131	16	1132
		15	1138	5	1166
		12	1174	21	1174
		22	1176	23	1177
		2	1179	27	1179
Pioch	D-V	19	1186	22	1188
		3	1189	19	1189
		21	1189	19	1197
		16	1200	3	1201
		11	1202	8	1242
		11	1242	14	1254
		10	1255	24	1266
		13	1270	25	1282
		21	1298	last	1298
		1	1302	2	1302
		6	1303	18	1304
		3	1305	5	1311
		20	1311	8	1312
Boesen		1	1315	2	1343
Counsel		28	1343	24	1350

Witness	Volume	Beginning Line	Beginning Page	Ending Line	Ending Page
Brush	D-VI	14	1356	24	1375
		25	1375	10	1386
		15	1402	8	1404
		21	1406	19	1415
		4	1416	8	1443
		17	1443	19	1443
		23	1443	11	1471
		15	1471	11	1478
Franklin	D-VI	1	1491	6	1523
Achten	D-VI	1	1595	16	1600
		17	1606	21	1618
		8	1619	1	1623
Payne	D-VI	6	1624	27	1625
Hovis		2	1627	8	1627
		17	1627	12	1656
Hogelan		1	1667	14	1668
		20	1670	last	1673
		29	1675	17	1679
Hogelan	D-VII	10	1696	11	1699
Weyl	D-VII	17	1699	13	1706
		last line	1707	1	1714½
		3	1737	last line	1762
		19	1845	9	1852
McEvoy	D-VII	2	1715	23	1715
		16	1717	12	1727
		1	1729	26	1732
		1	1734	18	1735
Aptekar	D-VII	1	1763	15	1777
Farley	D-VII	5	1781	last line	1800
		5	1804	11	1804
		5	1810	10	1811
Michael	D-VII	11	1811	9	1824
		20	1824	6	1825
Scovill	D-VII	7	1826	18	1835
		12	1842	29	1843
Master		1	1844	13	1845
Woehrle	D-VII	21	1854	25	1854
		10	1855	10	1862
		10	1878	12	1892
		7	1895	11	1896

Witness	Volume	Beginning Line	Beginning Page	Ending Line	Ending Page
		17	1899	17	1901
				End Sentence	
		27	1901	last line	1915
		13	1918	14	1918
		15	1918	8	1946
		14	1957	3	1969
		6	1976	22	1979
		19	1980	last	1993
		12	1999	last	2006
Pioch	D-VIII	7	2028	13	2028
		1	2029	10	2030
		14	2031	3	2034
		11	2035	15	2037
		16	2037	23	2042
		19	2044	2	2046
		7	2048	3	2054
		4	2054	25	2055
		7	2056	11	2056
Woehrle		12	2056	last line	2063
		12	2076	26	2087
		14	2089	2	2092
		23	2092	6	2093
		27	2093	7	2095
Russell		14	2102	24	2105
		4	2106	20	2108
		last	2112	9	2114
		15	2115	1	2118
		14	2118	4	2122
		16	2123	1	2126
		22	2131	15	2133
Woehrle		1	2136	25	2137
		4	2141	11	2141
Stipulation		6	2144	14	2145
Oberhoffken	D-IX	9	2147	24	2167
		3	2169	14	2195
Ohrn		7	2196	16	2197
		26	2197	8	2226
Hajovich		9	2226	29	2245
Kipta		1	2246	last	2254
Hunt	D-X	10	2258	26	2276

Witness	Volume	Beginning Line	Beginning Page	Ending Line	Ending Page
Gordon		15	2278	7	2283
		21	2283	8	2288
		last line	2288	5	2301
		7	2378	17	2387
		1	2452	8	2459
Moise		16	2459	22	2463
		19	2471	last line	2472
		21	2478	1	2479
		15	2480	2	2482
		13	2482	24	2489
		11	2494	15	2522
		7	2524	13	2535
		1	2544	17	2556
		4	2565	last	2566
		23	2567	6	2568
		21	2568	28	2568

The following to be printed as an Appendix in the printed transcript of record:

(i) Designated portions of the testimony of the witnesses Otto H. Schultz, Frank Steinke, Bert Weisel, Wm. Cunningham and Charles Gordon from Plaintiff's Exhibit 14.

Schultz:—

Q. 1, page 132, to and including Q. 22 and answer page 136.

Q. 45, page 140, to and including Q. 72 and answer page 145.

Weisel:—

Q. 1, page 190, to and including Q. 55 and answer page 198.

XQ. 84 and answer page 203.

XQ. 100, page 205 to XQ. 102, page 206.

XQ. 115 and answer page 210.

XQ. 116 and answer page 210.

XQ. 121, page 211, to and including RDQ. 150 and answer page 219.

RDQ. 153, page 220, to and including RDQ. 154 and answer page 220.

RDQ. 166, page 222, to and including RDQ. 177 and answer page 224.
RDQ. 183, page 224, to and including RXQ. 193 and answer page 226.
RRDQ. 207 and answer page 229.

Steinke:—

Q. 1, page 230, to and including RDQ. 66 and answer page 238.

Cunningham:—

Q. 1, page 288, to and including Q. 16 and answer page 293.
XQ. 19, page 293, to and including XQ. 43 and answer page 298.
RDQ. 44 and answer page 299.

Gordon:—

Q. 56, page 402, to and including Q. 57 and answer page 403.
Q. 66, page 405, to and including Q. 74 and answer page 409.
XQ. 188, page 441, to and including XQ. 190 and answer page 442.

(j) Master's report in *National Tube Company v. Mark,* Equity No. 4360.

(k) Judge Sater's opinion in *National Tube Co. v. Mark,* Equity No. 4360.

(l) Special Master's report in *Oneal v. San Jose Canning Company,* Equity No. 1307.

(m) The opinion of the Circuit Court of Appeals for the Sixth Circuit in *Gordon Form Lathe Company v. Walcott Machine Company,* No. 5111, decided April 12, 1929, 32 Fed. (2d) 55.

(n) The opinion of the Circuit Court of Appeals for the Sixth Circuit in *Gordon Form Lathe Company v. Ford Motor Company,* Nos. 7363, 7364, decided January 12, 1937, 87 Fed. (2d) 390.

(o) The following exhibits to be reproduced in separately bound Exhibit Volumes:

COMPOSITE DESIGNATION BY PLAINTIFF AND DEFENDANT OF EXHIBITS TO BE REPRODUCED IN EXHIBIT VOLUME.

Exhibit

D
E
E^{1} (Same as Exhibit 6 in Exhibit A)
F
F^{1} to F^{13}
H^{1}
L^{1} to L^{3}
M (Same as Exhibit 13 in Exhibit C)
N (Same as Exhibit 14 in Exhibit C)
O
P^{1} to P^{14}
Q
R
S
W^{1} to W^{14} inc.
X^{1} to X^{3}
Y^{1}
Z^{3} to Z^{7}
CC
DD
KK
LL
RR
209
217 to 222
232
233
237 Phys.
254
255
256 Phys.
257
258
259
263

COMPOSITE DESIGNATION BY PLAINTIFF AND DEFENDANT OF EXHIBITS TO BE REPRODUCED IN EXHIBIT VOLUME.

Exhibit

264
266
268
269
272
273
276
281 (Same as Exhibit 15 in Exhibit C)
289 to 294 inc.
295
296
297
298
299
301
302
304
305
306
307
308
309
312
313
314
315

Main Record Exhibits

Ex. 2
Ex. 5
Ex. 40
Ex. 41
Ex. 42
Ex. 48
Ex. 52
Ex. 53
Ex. 53[b]
Ex. 55
Ex. 56

COMPOSITE DESIGNATION BY PLAINTIFF AND DEFENDANT OF EXHIBITS TO BE REPRODUCED IN EXHIBIT VOLUME.

Ex. 61
Ex. 62
Ex. 63
Ex. 64
Ex. 71
Ex. 154[a], [b], [c], [d]

10. Final Judgment.
11. Plaintiff's Notice of Appeal.
12. Plaintiff's Cost Bond on Appeal.
13. Plaintiff's Statement of Points to be Urged on Appeal.
14. Defendant's Notice of Appeal.
15. Defendant's Cost Bond on Appeal.
16. Defendant's Statement of Points to be Urged on Appeal.
17. Stipulation re: Waiver of Supersedeas Bond.
18. Stipulation dated July 19, 1941, concerning number of copies of record to be filed on appeal.
19. Stipulation dated July 21, 1941, re exhibits and transcript of record on appeal in Gordon v. Ford Nos. 7363-4.
20. Order dated July 23, 1941, re exhibits and transcript of record on appeal in Gordon v. Ford Nos. 7363-4.
21. This designation of contents of record on Appeal.
22. All orders extending times for docketing the Appeal.
23. Clerk's certification.

Respectfully submitted,

LECHER, MICHAEL, WHYTE & SPOHN,
Attorneys for Plaintiff.

Dated: Sept. 5, 1941.

BODMAN, LONGLEY, BOGLE, MIDDLETON & FARLEY,
Attorneys for Defendant.

Dated: Sept. 4, 1941.

STIPULATION EXTENDING TIME FOR DOCKETING RECORD ON APPEAL.

(Dated June 3, 1941.)

IT IS HEREBY STIPULATED AND AGREED by and between counsel for the respective parties hereto, the Honorable Court consenting, that the time for docketing the record on appeal therein be extended to and including July 29, 1941.

(sgd) GEORGE REX FRYE,
(sgd) SWAN, FRYE & HARDESTY,
1403 Ford Building,
Detroit, Michigan,
Attorneys for Plaintiff.

Dated: June 3, 1941.

(sgd) BODMAN, LONGLEY, BOGLE, MIDDLETON & FARLEY,
1400 Buhl Building,
Detroit, Michigan,
Attorneys for Defendant.

Dated: June 3, 1941.

ORDER GRANTING EXTENSION OF TIME FOR DOCKETING RECORD ON APPEAL.

(Entered June 4, 1941 by Arthur J. Tuttle, Judge.)

Upon reading and filing of the stipulation of the parties hereto,

IT IS HEREBY ORDERED that the time for docketing the record on appeal be extended to and including July 29, 1941.

(sgd) ARTHUR J. TUTTLE,
United States District Court.
Judge.

Bay City, Mich.
Dated: June 4, 1941.
(Stipulation and order filed June 5, 1941)

STIPULATION EXTENDING TIME FOR DOCKETING RECORD ON APPEAL AND APPROVAL OF U. S. CIRCUIT COURT OF APPEALS.

(Filed July 21, 1941.)

It appearing that plaintiff herein has filed the Notice of its Appeal on April 30, 1941 and its time ninety (90) days within which to docket its appeal under the provisions of Rule 73 (g) (F. R. C. P.) expires on July 29, 1941; that defendant herein has filed the Notice of its Appeal on July 2, 1941; and that counsel for the parties hereto desire to prepare and print for docketing a single, consolidated transcript of record on appeal under the provisions of Rule 75 (k) (F. R. C. P.), therefore;

It is stipulated by counsel for the parties hereto this Honorable Court consenting that the time within which to print and docket the transcript of record on the appeal taken herein by plaintiff and the time within which to print and docket the transcript on the appeal taken herein by defendant be extended to include September 27, 1941.

RICHEY & WATTS,
B. D. WATTS,
Counsel for Plaintiff.

July 17, 1941.

BODMAN, LONGLEY, BOGLE, MIDDLETON & FARLEY,
Counsel for Defendant.

July 18, 1941.

Filed: July 21, 1941.

Approved:

XEN HICKS,
U. S. Circuit Judge.

STIPULATION EXTENDING TIME FOR DOCKETING RECORD ON APPEAL AND APPROVAL OF U. S. CIRCUIT COURT OF APPEALS.

(Filed September 24, 1941.)

It appearing that the time for docketing the respective appeals taken by Plaintiff and Defendant in the above cause, which was extended by the Stipulation approved by this Court on July 21, 1941, will expire on September 27, 1941 and it further appearing that the printer will be unable to complete the printing of the consolidated Transcript of Record on Appeal, therefore;

It is stipulated by counsel for the parties hereto this Honorable Court consenting that the time within which to print and docket the transcript of record on the appeal taken herein by plaintiff and the time within which to print and docket the transcript on the appeal taken herein by defendant be extended to include October 27, 1941.

RICHEY & WATTS,
B. D. WATTS,
Counsel for Plaintiff.

September 19, 1941.

BODMAN, LONGLEY, BOGLE, MIDDLETON & FARLEY,
Counsel for Defendant.

September 22, 1941.

Approved:

XEN HICKS,
U. S. Circuit Judge.

A true copy:

Attest:

J. W. MENZIES,
(Seal) *Clerk, U. S. C. C. A., Sixth Cir.*

STIPULATION EXTENDING TIME FOR DOCKETING RECORD ON APPEAL AND APPROVAL OF U. S. CIRCUIT COURT OF APPEALS.

(Filed October 23, 1941.)

It appearing that the time for docketing the respective appeals taken by Plaintiff and Defendant in the above cause, which was extended by the Stipulation approved by this Court and filed September 24, 1941, will expire on October 27, 1941 and it further appearing that the printer will be unable to complete the printing of the consolidated Transcript of Record on Appeal therefore;

It is stipulated by counsel for the parties hereto this Honorable Court consenting that the time within which to print and docket the Transcript of Record on the appeal taken herein by plaintiff and the time within which to print and docket the transcript on the appeal taken herein by defendant be extended to include November 26, 1941.

(signed) RICHEY & WATTS, B. D. WATTS,
Counsel for Plaintiff.

October 20, 1941.

(signed) BODMAN, LONGLEY, BOGLE, MIDDLETON & FARLEY,
Counsel for Defendant.

October 21, 1941.

Approved:

XEN HICKS,
Circuit Judge.

A true Copy:

Attest: J. W. MENZIES,
(Seal) *Clerk, U. S. C. C. A., Sixth Cir.*

CERTIFICATE OF CLERK.

EASTERN DISTRICT OF MICHIGAN,
SOUTHERN DIVISION, SS.

I, GEORGE M. READ, Clerk of the District Court of the United States, within and for the Eastern District of Michigan, Southern Division, do hereby certify that the foregoing pages contain a full, true and complete copy of the pleadings, testimony, exhibits and other papers filed in this cause, in accordance with the Stipulated Designation of Contents of Plaintiff-Defendant Composite Record on Appeal filed herein.

IN TESTIMONY WHEREOF, I have hereunto signed my name and affixed the seal of said Court at Detroit, in said District, this ..... day of November, 1941.

(Seal) GEORGE M. READ,
Clerk of the United States District Court for the Eastern District of Michigan.

APR 20 1943
CHARLES ELMORE CROPLEY
CLERK

IN THE

Supreme Court of the United States

OCTOBER TERM, 1942

No. 945-946 & 989

FORD MOTOR COMPANY,
Petitioner,

vs.

THE GORDON FORM LATHE COMPANY,
Respondent.

Transcript of Record

On Petition for Writ of Certiorari to the United States Circuit Court of Appeals for the Sixth Circuit

VOLUME IV.

Plaintiff's Exhibits, Defendant's Exhibits and Main Record Exhibits.

I. Joseph Farley,
1664 National Bank Bldg.,
Detroit, Michigan,

Cooper, Kerr & Dunham,
Woolworth Bldg., 233 Broadway,
New York, New York,
Attorneys for Petitioner.

Lecher, Michael, Whyte & Spohn,
110 East Wisconsin Ave., Milwaukee, Wisconsin,

Richey & Watts,
Union Commerce Bldg., Cleveland, Ohio,

Swan, Frye & Hardesty,
Ford Bldg., Detroit, Michigan,
Attorneys for Respondent.

No. .....

United States Circuit Court of Appeals

FOR THE SIXTH CIRCUIT.

THE GORDON FORM LATHE COMPANY,
Plaintiff-Appellant and Cross-Appellee,

vs.

FORD MOTOR COMPANY,
Defendant-Appellee and Cross-Appellant.

EQUITY No. 4564.

APPEAL FROM
THE DISTRICT COURT OF THE UNITED STATES,
EASTERN DISTRICT OF MICHIGAN,
SOUTHERN DIVISION.

TRANSCRIPT OF RECORD.

VOLUME IV.

Plaintiff's Exhibits, Defendant's Exhibits and Main Record Exhibits.

LECHER, MICHAEL, WHYTE & SPOHN,
110 East Wisconsin Ave., Milwaukee, Wisconsin,

RICHEY & WATTS,
Union Commerce Bldg., Cleveland, Ohio,

SWAN, FRYE & HARDESTY,
Ford Bldg., Detroit, Michigan,
Attorneys for Plaintiff-Appellant and Cross-Appellee.

BODMAN, LONGLEY, BOGLE, MIDDLETON & FARLEY,
1400 Buhl Bldg., Detroit, Michigan,

COOPER, KERR & DUNHAM,
Woolworth Bldg., 233 Broadway,
New York, New York,
Attorneys for Defendant-Appellee and Cross-Appellant.

INDEX.

VOLUME I.

Trial Papers, Plaintiff's Record and Part of Defendant's Record.

Caption 1

Decree on Mandate 2

Report of Special Master 4

I. Nature of Invention and History of Litigation and of Defendant's Use of Machinery 5

II. Claims of Parties 9

III. Accounting Period, and Production of Shafts on Infringing Machines: Question of Notice 11

A. Beginning of Period 11

B. Production of Camshafts and End of Accounting Period 15

IV. Profits 17

A. Profits from Infringement 18

1. Standard of Comparison 18

a. Standard for Model A Shaft 21

(1) Pioch and Modified Walcott Machines 21

(2) Westinghouse Lathe 24

(3) Ford Cam Shaper 28

b. Standard for Tractor Shaft 34

c. Effect of Choice of Incorrect Standard ... 35

2. Savings from Use of Infringing Machines ... 36

a. Savings or Loss in Other Operations: Straightening 40

b. Savings in Cam-Roughing Operation 42

(1) Direct Labor Savings 42

(a) Speeds of Production on Model T Shaft 43
(b) Speeds of Production on Model A Shaft 44
(c) Speeds of Production on Tractor Shaft 46
(2) Other Savings: Overhead or Burden 47
(3) Offset of Loss from Scrapping Shapers 59
3. Apportionment of Profits..... 60
V. Damages: Reasonable Royalty..... 71
A. Conditions to Assessment of Reasonable Royalty 73
B. Amount of Royalty..... 74
VI. Questions of Clean Hands and of Increase of Recovery 81
A. Clean Hands 81
B. Increase of Recovery..... 84
VIII. Interest 93
Schedule A. Production of Camshafts on Infringing Machines 94
Schedule B. Proration of Production on Camshafts between Pioch and Walcott Machines, May 14, 1930 to March 15, 1931, inclusive..... 97
Schedule C. Comparative Costs on Cam-Roughing Operation with Walcott Lathes and Standards of Comparison 99
Clerk's Notice of the Filing of the Master's Report..... 101
Plaintiff's Objections to Master's Report..... 101
Exceptions of Defendant to the Report of the Special Master 103
Motion for Action Upon Master's Report and Objections Thereto 111
Affidavit of Todd L. Moise..... 111

Schedule I 115
Schedule II 115
Schedule III 115
Schedule IV 115
Notice of Motion for Action Upon Master's Report..... 117
Opinion of the Hon. Arthur J. Tuttle, District Judge, on the Objections to the Master's Report..... 118
Master's Order for Statement of Account, dated July 6, 1937 132
Exhibit A—Defendant's Statement of Account, filed September 27, 1937 138
Exhibit 7. Operation Sheet No. 1..... 151
Operation Sheet No. 2..... 152
Operation Sheet No. 3..... 153
Operation Sheet No. 4..... 154
Operation Sheet No. 5..... 155
Exhibit 10. Material Price Card No. 1..... 156
Material Price Card No. 2..... 157
Exhibit 11. Computation of Certain Items of Cost of Gordon Lathe Operation on Tractor Camshafts 158
Exhibit 12. Computation of Certain Costs Involved in Rough Grinding Operation on Tractor Camshafts by Landis 10 x 36 Grinders during Period July 1, 1925 to January 1, 1928..... 160
Exhibit B—Amendment to Defendant's Statement of Account, verified December 31, 1937..... 161
Ptf. Rec. Vol. III beginning line 18, page 29 of Typewritten Transcript (Mr. Spohn)..... 166
Master's Order for Statement of Account, dated October 29, 1937 169
Exhibit C—Defendant's Further Statement of Account, dated December 31, 1937..... 171
Ptf. Rec. Vol. III from page 34, line 26 to page 37, line 3 inclusive of Typewritten Transcript (Mr. Spohn).. 193

TRANSCRIPT OF TESTIMONY
(Designated by both Plaintiff and Defendant).

Appearances 195

PLAINTIFF'S RECORD.

FRED M. HOVIS (Defendant's Witness):
Cross Examination by Mr. Spohn..... 195
Cross Examination by Mr. Farley..... 208
Re-Cross Examination by Mr. Spohn..... 212
Re-Cross Examination by Mr. Farley..... 214
Re-Cross Examination by Mr. Spohn..... 216

HAROLD M. WOEHRLE (Defendant's Witness):
Cross Examination by Mr. Spohn..... 216
Re-Cross Examination by Mr. Spohn..... 220
Cross Examination by Mr. Spohn..... 227
Re-Direct Examination by Mr. Farley..... 239
Re-Cross Examination by Mr. Spohn..... 242
Re-Direct Examination by Mr. Farley..... 244

FRED M. HOVIS (Recalled):
Cross Examination by Mr. Spohn..... 244

HAROLD M. WOEHRLE (Recalled):
Cross Examination by Mr. Spohn..... 246
Cross Examination by Mr. Farley..... 249

NORMAN R. SCOVILL (Defendant's Witness):
Direct Examination by Mr. Farley..... 253
Cross Examination by Mr. Spohn..... 254

TODD L. MOISE (Plaintiff's Witness):
Direct Examination by Mr. Spohn..... 255
Cross Examination by Mr. Farley..... 258
Re-Direct Examination by Mr. Spohn..... 273
Re-Cross Examination by Mr. Farley..... 274

CHARLES GORDON (Plaintiff's Witness):
Direct Examination by Mr. Spohn..... 275
Cross Examination by Mr. Farley..... 280
Re-Direct Examination by Mr. Spohn..... 282
Cross Examination by Mr. Farley..... 283

LYLE E. BROUGHTON (Plaintiff's Witness):
Direct* Examination by Mr. Spohn..... 291

HOWARD JONES (Plaintiff's Witness):
Direct Examination by Mr. Spohn..... 296
Cross Examination by Mr. Farley..... 300
Re-Direct Examination by Mr. Spohn..... 302
Re-Cross Examination by Mr. Farley..... 303

MILES G. SLONIKER (Plaintiff's Witness):
Direct Examination by Mr. Spohn..... 304
Cross Examination by Mr. Farley..... 308

DEFENDANT'S RECORD.

CHARLES GORDON (Plaintiff's Witness):
Cross Examination by Mr. Farley..... 312

TODD L. MOISE (Recalled) (Plaintiff's Witness):
Cross Examination by Mr. Farley..... 423

---

* The Examination of Lyle E. Broughton by Mr. Spohn, appearing on page 291, was incorrectly stated in the Typewritten Transcript. It should be "Direct" instead of "Cross."

VOLUME II.

Defendant's Record (Continued).

MORRIS E. SHAWKEY (Defendant's Witness):
Direct Examination by Mr. Farley..... 427

SPENCER W. LIBBY (Defendant's Witness):
Direct Examination by Mr. Farley..... 436
Cross Examination by Mr. Spohn..... 444
Re-Direct Examination by Mr. Farley..... 454
Re-Cross Examination by Mr. Spohn..... 457

MORRIS E. SHAWKEY (Recalled) (Defendant's Witness):
Direct Examination by Mr. Farley..... 461

MIKE KLOPSIC (Defendant's Witness):
Direct Examination by Mr. Farley..... 464

RALPH T. MYERS (Defendant's Witness):
Direct Examination by Mr. Farley..... 481

VICTOR F. MARENTETTE (Defendant's Witness):
Direct Examination by Mr. Farley..... 486
Cross Examination by Mr. Spohn..... 493

A. M. WIBEL (Defendant's Witness):
Re-Direct Examination by Mr. Farley..... 495

CHARLES GORDON (Plaintiff's Witness):
Cross Examination by Mr. Farley..... 511

THEODORE R. DAHL (Defendant's Witness):
Direct Examination by Mr. Farley..... 512

GEORGE W. SMITH, JR. (Defendant's Witness):
Direct Examination by Mr. Farley..... 526

ALBERT APTEKAR (Defendant's Witness):
Direct Examination by Mr. Farley..... 529
Cross Examination by Mr. Michael..... 545
Re-Direct Examination by Mr. Farley..... 559

WILLIAM D. HUNT (Defendant's Witness):
Direct Examination by Mr. Farley..... 559
Cross Examination by Mr. Spohn..... 564
Re-Direct Examination by Mr. Farley..... 567
Re-Cross Examination by Mr. Spohn..... 567
Re-Direct Examination by Mr. Farley..... 567

HENRY G. PILLINGER (Defendant's Witness):
Direct Examination by Mr. Farley..... 568
Cross Examination by Mr. Spohn..... 579
Re-Direct Examination by Mr. Farley..... 585
Re-Cross Examination by Mr. Spohn..... 586

JOHN L. SCHMIDT (Defendant's Witness):
Direct Examination by Mr. Farley..... 588
Cross Examination by Mr. Spohn..... 605

RUDY EHRHARD HERKLOTZ (Defendant's Witness):
Direct Examination by Mr. Farley..... 606

WILLIAM F. PIOCH (Defendant's Witness):
Direct Examination by Mr. Farley..... 632
Cross Examination by Mr. Michael..... 663
Re-Direct Examination by Mr. Farley..... 697
Re-Cross Examination by Mr. Michael..... 722
Re-Direct Examination by Mr. Farley..... 727

NIELS BOESEN (Defendant's Witness):
Direct Examination by Mr. Farley..... 728

ALANSON P. BRUSH (Defendant's Witness):
Direct Examination by Mr. Farley..... 752
Cross Examination by Mr. Michael..... 801
Re-Direct Examination by Mr. Farley..... 813
Re-Cross Examination by Mr. Michael..... 820

ERVIN FRANKLIN (Defendant's Witness):
Direct Examination by Mr. Farley..... 825
Cross Examination by Mr. Spohn..... 843
Re-Direct Examination by Mr. Farley..... 846
Re-Cross Examination by Mr. Spohn..... 846
Re-Direct Examination by Mr. Farley..... 846
Re-Cross Examination by Mr. Spohn..... 847

JOSEPH HENRY ACHTEN (Defendant's Witness):
Direct Examination by Mr. Farley..... 847
Cross Examination by Mr. Michael..... 856
Re-Direct Examination by Mr. Farley..... 859

FRED HOVIS (Recalled) (Defendant's Witness):
Re-Direct Examination by Mr. Farley..... 863
Re-Cross Examination by Mr. Spohn..... 869
Re-Direct Examination by Mr. Farley..... 874
Re-Cross Examination by Mr. Spohn..... 877
Re-Direct Examination by Mr. Farley..... 881
Re-Cross Examination by Mr. Spohn..... 882

VOLUME III.

Defendant's Record (Continued),
Appendix to Record and Appeal Papers.

HAROLD W. HOGELAN (Defendant's Witness):
Direct Examination by Mr. Farley..... 883
Re-Direct Examination by Mr. Farley..... 889

PIERCE ALBERT WEYL (Defendant's Witness):
Direct Examination by Mr. Farley..... 891
Cross Examination by Mr. Michael..... 911
Re-Direct Examination by Mr. Farley..... 913
Re-Cross Examination by Mr. Michael..... 918
Re-Direct Examination by Mr. Farley..... 920
Re-Cross Examination by Mr. Michael..... 924

JAMES McEVOY (Defendant's Witness):
Direct Examination by Mr. Farley..... 925
Cross Examination by Mr. Michael..... 932
Re-Direct Examination by Mr. Farley..... 935

ALBERT APTEKAR (Recalled) (Defendant's Witness):
Re-Direct Examination by Mr. Farley..... 936
Re-Cross Examination by Mr. Spohn..... 939
Re-Cross Examination by Mr. Michael..... 940
Re-Direct Examination by Mr. Farley..... 942
Re-Cross Examination by Mr. Michael..... 943
Re-Direct Examination by Mr. Farley..... 945

I. JOSEPH FARLEY (Defendant's Witness):
Direct Testimony 951
Cross Examination by Mr. Michael..... 956

JOHN W. MICHAEL (Plaintiff's Witness):
Direct Testimony 962
Cross Examination by Mr. Farley..... 965

NORMAN R. SCOVILL (Defendant's Witness):
Re-Direct Examination by Mr. Farley..... 971

HAROLD M. WOEHRLE (Defendant's Witness):
Re-Direct Examination by Mr. Farley..... 980

WILLIAM F. PIOCH (Defendant's Witness):
Re-Direct Examination by Mr. Farley..... 1051
Re-Cross Examination by Mr. Michael..... 1055
Re-Direct Examination by Mr. Farley..... 1059
Re-Direct Examination by Mr. Farley..... 1060
Re-Cross Examination by Mr. Michael..... 1061
Re-Direct Examination by Mr. Farley..... 1063
Re-Cross Examination by Mr. Michael..... 1063
Re-Direct Examination by Mr. Farley..... 1063
Re-Cross Examination by Mr. Michael..... 1064
Re-Direct Examination by Mr. Farley..... 1064
Re-Cross Examination by Mr. Michael..... 1065

HAROLD M. WOEHRLE (Defendant's Witness):
Re-Direct Examination by Mr. Farley..... 1065
Re-Cross Examination by Mr. Spohn..... 1071
Re-Direct Examination by Mr. Farley..... 1080

DONALD M. RUSSELL (Defendant's Witness):
Direct Examination by Mr. Farley..... 1082

HAROLD M. WOEHRLE (Defendant's Witness):
Examination by the Master..... 1094
Re-Direct Examination by Mr. Farley..... 1095
Re-Cross Examination by Mr. Spohn..... 1096

ALEXANDER OBERHOFFKEN (Defendant's Witness):
Direct Examination by Mr. Farley..... 1097
Cross Examination by Mr. Michael..... 1114
Re-Direct Examination by Mr. Farley..... 1122
Re-Cross Examination by Mr. Michael..... 1124
Re-Direct Examination by Mr. Farley..... 1126
Re-Cross Examination by Mr. Michael..... 1127
Re-Direct Examination by Mr. Farley..... 1129

HENNING OHRN (Defendant's Witness):
Direct Examination by Mr. Farley..... 1130
Cross Examination by Mr. Michael..... 1137
Re-Direct Examination by Mr. Farley..... 1150

CHARLES HAJOVICH (Defendant's Witness):
Direct Examination by Mr. Farley..... 1151
Cross Examination by Mr. Michael..... 1159

ALBERT KIPTA (Defendant's Witness):
Direct Examination by Mr. Farley..... 1165
Cross Examination by Mr. Michael..... 1167

WILLIAM D. HUNT (Recalled) (Defendant's Witness):
Re-Direct Examination by Mr. Farley..... 1171
Re-Cross Examination by Mr. Michael..... 1174
Re-Direct Examination by Mr. Farley..... 1182

CHARLES GORDON (Recalled) (Plaintiff's Witness):
Re-Direct Examination by Mr. Michael..... 1183
Re-Cross Examination by Mr. Farley..... 1198

TODD L. MOISE (Recalled) (Plaintiff's Witness):
Re-Direct Examination by Mr. Spohn..... 1210
Re-Cross Examination by Mr. Farley..... 1240
Re-Direct Examination by Mr. Spohn..... 1258

APPENDIX

TO TRANSCRIPT OF RECORD

Designated Portion of the Testimony of the Witnesses Otto H. Schultz, Frank Steinke, Bert Weisel, William Cunningham, and Charles Gordon from Plaintiff's Exhibit 14—Patent Office Record, Interference No. 47,200—Herman W. Melling vs. Charles Gordon and Alfred Redlin.

OTTO H. SCHULTZ:

Q. 1, page 132, to and including Q. 22 and Answer, page 136:
Direct Examination by Mr. Earl..... 1261

Q. 45, page 140, to and including Q. 72 and Answer 145:
Direct Examination by Mr. Earl..... 1264

BERT WEISEL:

Q. 1, page 190, to and including Q. 55 and Answer, page 198:
Direct Examination by Mr. Earl..... 1268

XQ. 84 and Answer, page 203:
Cross Examination by Mr. Dennett..... 1274

XQ. 100, page 205, to and including XQ. 102 and Answer, page 206:
Cross Examination by Mr. Dennett..... 1274

XQs. 115 and 116 and Answers, page 210:
Cross Examination by Mr. Dennett..... 1275

XQ. 121, page 211, to and including RDQ. 150 and Answer, page 219:
Cross Examination by Mr. Dennett..... 1276
Re-Direct Examination by Mr. Earl..... 1281

RDQs. 153 and 154 and Answers, page 220:
Re-Direct Examination by Mr. Earl..... 1282

RDQ. 166, page 222, to and including RDQ. 177 and Answer, page 224:
Re-Direct Examination by Mr. Earl..... 1282

RDQ. 183, page 224 to and including RXQ. 193 and Answer, page 226:
Re-Direct Examination by Mr. Earl..... 1284
Re-Cross Examination by Mr. Dennett..... 1284

RRDQ. 207 and Answer, page 229:
Re-Re-Direct Examination by Mr. Earl..... 1285

FRANK STEINKE:

Q. 1, page 230, to and including RDQ. 66 and Answer, page 238:
Direct Examination by Mr. Earl..... 1286
Cross Examination by Mr. Dennett..... 1289
Re-Direct Examination by Mr. Earl..... 1291

WILLIAM CUNNINGHAM:

Q. 1, page 288, to and including Q. 16 and Answer, page 293:
Direct Examination by Mr. Earl..... 1292

XQ. 19, page 293, to and including XQ. 43 and Answer, page 298:
Cross Examination by Mr. Dennett..... 1295

RDQ. 44 and Answer, page 299:
Re-Direct Examination by Mr. Earl..... 1299

CHARLES GORDON:

Q. 56, page 402, to and including Q. 57 and Answer, page 403:
Direct Examination by Mr. Dennett..... 1300

Q. 66, page 405, to and including Q. 74 and Answer, page 409:
Direct Examination by Mr. Dennett..... 1300

XQ. 188, page 441, to and including XQ. 190 and Answer, page 442:
Cross Examination by Mr. Earl..... 1303

Master's Report in *National Tube Company v. Mark et al.*, Equity No. 4360 1305
Proceedings in Court 1305
Proceedings Before the Master 1306
Conceded Facts 1307
The 1909 Order 1308
Answers to Questions Referred 1309
Gains and Profits 1310
Savings 1312
Advantages Derived by Defendant From and Through Said Infringement 1315
License 1319
Special Damages 1321
Damages 1322
Interest on the Award 1325
Judge Sater's Opinion on Exceptions to Master's Report in *National Tube Company v. Mark et al.*, Equity No. 4360 1326
Special Master's Report, on Accounting of Profits, Opinion and Order, and Opinion and Order on Standard of Comparison in *O'Neal v. San Jose Canning Co.*, Equity No. 1307 1333
Special Master's Report on Accounting of Profits 1333
Master's Opinion and Order 1336
Special Master's Opinion and Order on Standard of Comparison 1340
Opinion of the Circuit Court of Appeals for the Sixth Circuit in *Gordon Form Lathe Co. v. Walcott Machine Co.*, No. 5511, Decided April 12, 1929, 32 Fed. (2d) 55 1344
Opinion of the Circuit Court of Appeals for the Sixth Circuit in *Gordon Form Lathe Co. v. Ford Motor Co.*, Nos. 7363, 7364, Decided January 12, 1937, 87 Fed. (2d) 390 1358

Final Judgment 1365
Notice of Appeal of Plaintiff..... 1369
Bond on Appeal of Plaintiff..... 1370
Plaintiff's Statement of Points To Be Urged on Appeal.... 1371

Notice of Appeal of Defendant..... 1373
Bond on Appeal of Defendant..... 1375
Defendant's Statement of Points To Be Relied On Upon Appeal under Rule 75(d) of Rules of Civil Procedure... 1376

Stipulation Re Waiver of Supersedeas Bond..... 1379
Stipulation Concerning Number of Copies of Record to be Filed on Appeal..... 1379
Stipulation Re Exhibits and Transcript of Record on Appeal in *Gordon v. Ford*, Nos. 7363-4..... 1380
Order Re Exhibits and Transcript of Record on Appeal in *Gordon v. Ford*, Nos. 7363-4..... 1381
Stipulated Designation of Contents of Plaintiff-Defendant Composite Record on Appeal..... 1382
Stipulation Extending Time to July 29, 1941..... 1399
Order Extending Time to July 29, 1941..... 1399
Stipulation (filed July 21, 1941) Extending Time to September 27, 1941, and Approval of U. S. Circuit Court of Appeals 1400
Stipulation (filed September 24, 1941) Extending Time to October 27, 1941..... 1401
Stipulation Extending Time to November 26, 1941, and Approval of U. S. Circuit Court of Appeals..... 1402
Certificate of Clerk..... 1403

VOLUME IV.

Plaintiff's Exhibits, Defendant's Exhibits and Main Record Exhibits.

PLAINTIFF'S EXHIBITS.

Exhibit		Page
D.	Cost Summary Card for A-6250 Camshaft covering January and March 1930 and September and October 1929	1404-5
E.	Cost Summary Card for A-6250 Camshaft covering May, August and October 1930 and March 1931	1406-7
E-1.	Cost Summary Card for A-6250 Camshaft covering March, May and July 1929. (Same as Exhibit 6 in Exhibit A)	1408-9
F.	Cost Summary Card for T-410 Camshaft covering January to June 1923	1410
F-1.	Cost Summary Card for T-410 Camshaft covering July to November 1923	1411
F-2.	Cost Summary Card for T-410 Camshaft covering January to June 1924	1412
F-3.	Cost Summary Card for T-410 Camshaft covering July to November 1924	1413
F-4.	Cost Summary Card for T-410 Camshaft covering April to September 1925	1414
F-5.	Cost Summary Card for T-410 Camshaft covering October to November 1925	1415
F-6.	Cost Summary Card for T-410 Camshaft covering January 1926 to October 1929	1416-17
F-7.	Cost Summary Card for T-410 Camshaft covering November 1928	1418
F-8.	Cost Summary Card for T-410 Camshaft covering October 1930	1419
F-9.	Cost Summary Card for A-6250 Camshaft covering August 1928 to January 1929	1420-21

EXHIBIT PAGE

F-10. Cost Summary Card for A-6250 Camshaft covering December 1927 to June 1928.....1422-23

F-11. Cost Summary Card for F-446 Camshaft covering April to September 1925..... 1424

F-12. Cost Summary Card for F-446 Camshaft covering October to November 1925..... 1425

F-13. Cost Summary Card for F-446 Camshaft covering January 1926 to March 1928.....1426-27

H-1. Production Cost Record for T-410 Camshaft covering November 1927..... 1428

L-1 to L-3. Pages from note book kept by witness Spencer W. Libby 1429-31

M. Operation Sheet compiled from notations appearing in Exhibit L. (Same as Exhibit 13 attached to Exhibit C) 1432-33

N. Operation Sheet for T-410 Camshaft dated 10-8-24. (Same as Exhibit 14 attached to Exhibit C).....1434-35

O. Correspondence between Ford Motor Company and Jackson Shaper Company.....1436-63

P-1 to P-14. Ford Work Orders for Repairs to Melling Lathes 1464-70

Q. Inventory card covering Ford Camshaft Shaper #10706 1471

R. Inventory card covering Ford Camshaft Shaper #11628 1472

S. Inventory card covering Ford Camshaft Shaper #12205 1473

W-1 to W-14. Study of operation of Melling Lathes....1474-87

X-1. Productive Labor and Overhead for Department 410 6-1-25 1488

X-2. Same—continued to 2-28-31 1489

X-3. Productive Labor and Overhead for F-446 Camshaft Machining 6-1-25 to 3-31-28 1490

Exhibit		Page
Y-1.	Inventory Card covering Melling Cam Turning Lathe Ford #36592	1491-92
Z-3.	Plaintiff's statement of account	1493-1513
Z-4.	Plaintiff's schedule showing computation of depreciation on Model T type cam shapers and Melling Cam Lathes	1514-16
Z-5.	Plaintiff's compilation of depreciation cost on Model T Cam Shapers and Melling Cam Lathes	1517-18
Z-6.	Plaintiff's computation of Maintenance and Overhaul Expense	1519-22
Z-7.	Plaintiff's computation of Cost of Tools	1523-24
CC.	Telegram dated 11-18-30 addressed to Ford Motor Company	1525
DD.	Telegram dated 11-18-30	1526
GG.	Release to White Motor Company from infringement of Gordon patent. (Included in Exhibit RR).	1540
HH.	Letter of White Motor Company to Mr. John W. Michael dated 12-24-29. (Included in Exhibit RR).	1532
RR.	Gordon Form Lathe Company agreement file	1527-57

DEFENDANT'S EXHIBITS.

209.	Copy of U. S. Patent No. 1,655,655 of January 10, 1928 to Herman W. Melling	1558-66
217 to 222.	Ford Purchase Orders for Melling Cam Turning Lathes	1567-73
232.	White Motor Company Departmental Correspondence dated 12-17-31	1574
233.	Same—dated 1-29-30	1575
254.	Ford Motor Company print dated 11-17-13 showing front view of construction of original Ford Cam Shaper with attachment superimposed in yellow	1576
255.	Same—end view	1577

Exhibit		Page
257.	Ford assembly print showing attachment for use in shaping Model A Camshafts	1578
258.	Same—sub-assembly	1579
259.	Same—showing removal of tools numbers 1 and 5	1580
263.	Sketch drawn by witness Pioch	1581
264.	Letter of Mr. Pioch to Mr. Farley dated 11-2-38	1582
266.	Computation by witness Pioch	1583
268.	Print Camshaft Shaping Machine Oberhoffken design—layout showing "tools to cut in both directions—speeds being equal"	1584
269.	Same—Layout to show individual relief of tools on return stroke	1585
272.	Sketch by witness Brush showing cutting action of Shaper Tool	1586
273.	Same—showing cutting action of Melling Tool	1587
276.	Brush sketch of two way cuts	1588
281.	Operation Sheet for T-410 Camshaft dated 12-21-27. (Same as Exhibit 15 in Exhibit C)	1589-90
289 (1 to 10).	Engineering Record of T-410 Camshaft, Forging Size	1591-95
290 (1 to 13).	Same—Finished Size	1596-1602
291 (1 to 3).	Engineering Record for A-6250 Camshaft, Forging Size	1602-03
292 (1 to 4).	Same—Finished Size	1604-05
293.	Ford print 9-Z-32, Shaper Tool	1606
294.	Ford print 9-Z-215, Melling Tool	1607
295.	Letter of witness Pioch dated 2-1-39 re: Surface Speeds of Shaper Tools	1608-09
296.	Sample Ford Purchase Order	1610
297.	Print of Ford Camshaft A-6250-A1	1611

EXHIBIT PAGE

298 (1 to 6). Engineering Record Fordson Tractor Camshaft, Forging and Finished Size.....1612-14

299. Summary of Ford Tractor Production..... 1615

301. Defendant's substitute pages for plaintiff's statement of account Exhibit Z-3 making 3 changes....1616-22

302. Same—6 changes 1623-29

304. Pages from Ford Parts Price List, effective 2-1-31 1630-33

305. Defendant's computation of Comparative Direct Labor Costs on F-446 Tractor Camshafts.....1634-35

306. International Harvester Company Requisition for Gordon Lathe dated 11-20-19..... 1636

307. International Harvester Company order for Gordon Lathe dated 11-24-19 1637

308. International Harvester Company installation of machinery card covering "Gordon Std. Cam Turning Machine" 1638

309. International Harvester Company disposition of machinery card covering same 1639

312. Copy U. S. Patent No. 1,512,995 of 10-28-24 to Herman W. Melling 1640-47

313. Copy U. S. Patent No. 1,634,550 of 7-5-27 to Herman W. Melling 1648-52

314. Print #C-2129 of Walcott Machine Company—"Assembly of New Style Parallel Type Tool Head" 1653

315. Print #KT-530-A of Walcott Machine Company—"Assembly of Tool Head" 1654

MAIN RECORD EXHIBITS.

Exhibit		Page
2.	Copy of U. S. Patent No. 1,542,803 of 6-16-25 to Chas. Gordon *et al.*	1655-69
5.	Amended Final Decree in Walcott case	1670-72
40.	Notice of Infringement dated 7-1-25	1673
41.	Cuts only of Walcott Machine Company advertising pamphlet	1674-75
42.	Mailing List	1676-83
48.	1929 Notice of Infringement	1684-86
52.	Photograph of Ford Shaper ¾ front view	1687
53.	Same—front view	1688
53-b.	Illustrated chart of Ford Shaper tool movements and actions	1689
55.	Record re: delivery of Gordon machine to Ford	1690
56.	Copy of Ford order for Gordon machine	1691-92
61.	Affidavit of I. W. Kindall re: Ford Camshaft Shaper	1693
62.	Ford Motor Company Print dated 5-18-15 showing Ford Camshaft Shaper, front view	1694
63.	Same—end view	1695
64.	Walcott letter to Ford 7-30-29	1696
71.	Copy of General Motors-Gordon Company Agreement. (Included in Exhibit RR)	1552-57
154-a, b, c, d.	Records produced by Ford in response to Court order	1697-1700

Form 2866 1555—4-12-29

SCHEDULE.....

COST SUMMARY

SYMBOL... A-6250 A1...

PART NAME..... CAMSHAFT ..... Ex 8 .....

KIND OF MATERIAL

QUANTITY MAT'L REQ.

WEIGHT { ROUGH... 11.0 lbs FINISHED.....

MONTH JAN 1930

MATERIAL PURCHASES — ☐ 70 FRT.

ORDER	DATE	QUANTITY	PRICE	UNIT	DISC.	FRT. RATE
	Dept	153-				
		181825	.0223	Lb		

AVE. FRT. EA. — AVE. INC. FRT. AND M. H. .0223

DEPT.	SCRAP	PROD'N	UNIT COSTS MAT'L	LABOR	BURDEN	TOTAL
154	10	9139	2453	0058	0075	2586
1514	1256	9971		0871	4294	5115
410	8704	90679		5819	9106	1.4625
Gen Balance	Check			0040	0057	0097
Trial Balance	Check			0009	0013	0022
SCRAP LOSS	Dept	1514 218	10 36 13 47			59 36 73 47
MNFG. PLANT COST			27.36	6447	1.3545	2.2728
SHIPPING EXPENSE						
MNFG. PLANT TO BRANCH						
DIRECT			1.5	3493		
AVE. COST TO BRANCH			1514	5.0367		
			410	3.8618		
			902	.2522		
PAINTING			2455	.0578		
TOTAL COST TO BRANCH—SERVICE				39.5578		

MONTH MAR 1930

MATERIAL PURCHASES — ☐ 70 FRT.

ORDER	DATE	QUANTITY	PRICE	UNIT	DISC.	FRT. RATE
Dept	153	972115	.0279	#		

AVE. FRT. EA. — AVE. INC. FRT. AND M. H.

DEPT.	SCRAP	PROD'N	UNIT COSTS MAT'L	LABOR	BURDEN	TOTAL
154	13	181507	3069	0057	0074	3200
1514	2815	194947		0711	3413	4124
1513	Assembly	156386		0015	0040	0055
410	4939	156386		5895	8548	1.4443
	Repair	156386		0016	0022	0038
					0007	0001
	Repair			0020	0028	0048
Scrap Loss			0046			0279
			.3548	.6716	1.7174	2.7438
MNFG. PLANT TO BRANCH						
DIRECT			1.5			
AVE. COST TO BRANCH			1514	4.4721		
			410	.0922		
			902	36.6432		
PAINTING			902 2455	.0777		
TOTAL COST TO BRANCH—SERVICE				.7375		

PLAINTIFF'S EXHIBIT NO. D

Form 3566 15M 4-12-29

COST SUMMARY

SCHEDULE

SYMBOL A-6250 Fl.

PART NAME CAMSHAFT

KIND OF MATERIAL

QUANTITY MAT'L REQ

WEIGHT ROUGH 11.0 #

FINISHED wt. change left

MONTH

MONTH OCT - 1929

MATERIAL PURCHASES ☐ 70 FRT

ORDER	DATE	QUANTITY	PRICE	UNIT	DISC	FRT RATE
		Dept 153 = 2816580# @ .0226 #				

AVE. FRT. EA. AVE. INC. FRT. AND M. H. .0226 #

DEPT.	SCRAP	PROD'N	UNIT COSTS MAT'L	LABOR	BURDEN	TOTAL
154	195	183761	2486	0053	0069	2608
1514	4759	186822		0884	2652	3536
184 Pickle		154561		0002	0006	0008
410	4885	154561		6036	7666	1.3202
790						
902 Repair		154561		0009	0015	0024
2455 Repair		154561		0008	0010	0018
SCRAP LOSS			0003			0003
MNFG. PLANT COST			0066			0066
			0144			0144
SHIPPING EXPENSE		Total	2749	6992	1.0418	2.3[illegible]
MNFG. PLANT TO BRANCH						
DIRECT						
AVE. COST TO BRANCH						
PAINTING						
TOTAL COST TO BRANCH—SERVICE						

MATERIAL PURCHASES ☐ 70 FRT.

ORDER	DATE	QUANTITY	PRICE	UNIT	DISC.	FRT. RATE
					5.5375	
					1.0308	
Dept 153 = 366180 @ 0251 #						
" 153 = 696270 @ 0240 #						
Average 1062450 .0244 #						

AVE. FRT. EA. AVE. INC. FRT. AND M. H.

DEPT.	SCRAP	PROD'N	UNIT COSTS MAT'L	LABOR	BURDEN	TOTAL
154	144	186658	2684	0044	0057	2785
1514	4787	198703		0831	2800	3631
~~184 Pickle~~						
410	4461	174545		5743	7466	1.3209
2455 Repair		174545		0005	0007	0012
902 Repair		174545		0021	0039	0060
790S		174545		0023	0003	0026
Scrap		154 1514 410	0002 0067 0164			0002 0067 0164
TOTAL						
DIRECT			2917	6667	1.0372	1.9956
AVE. COST TO BRANCH						
PAINTING						
TOTAL COST TO BRANCH—SERVICE						

1405

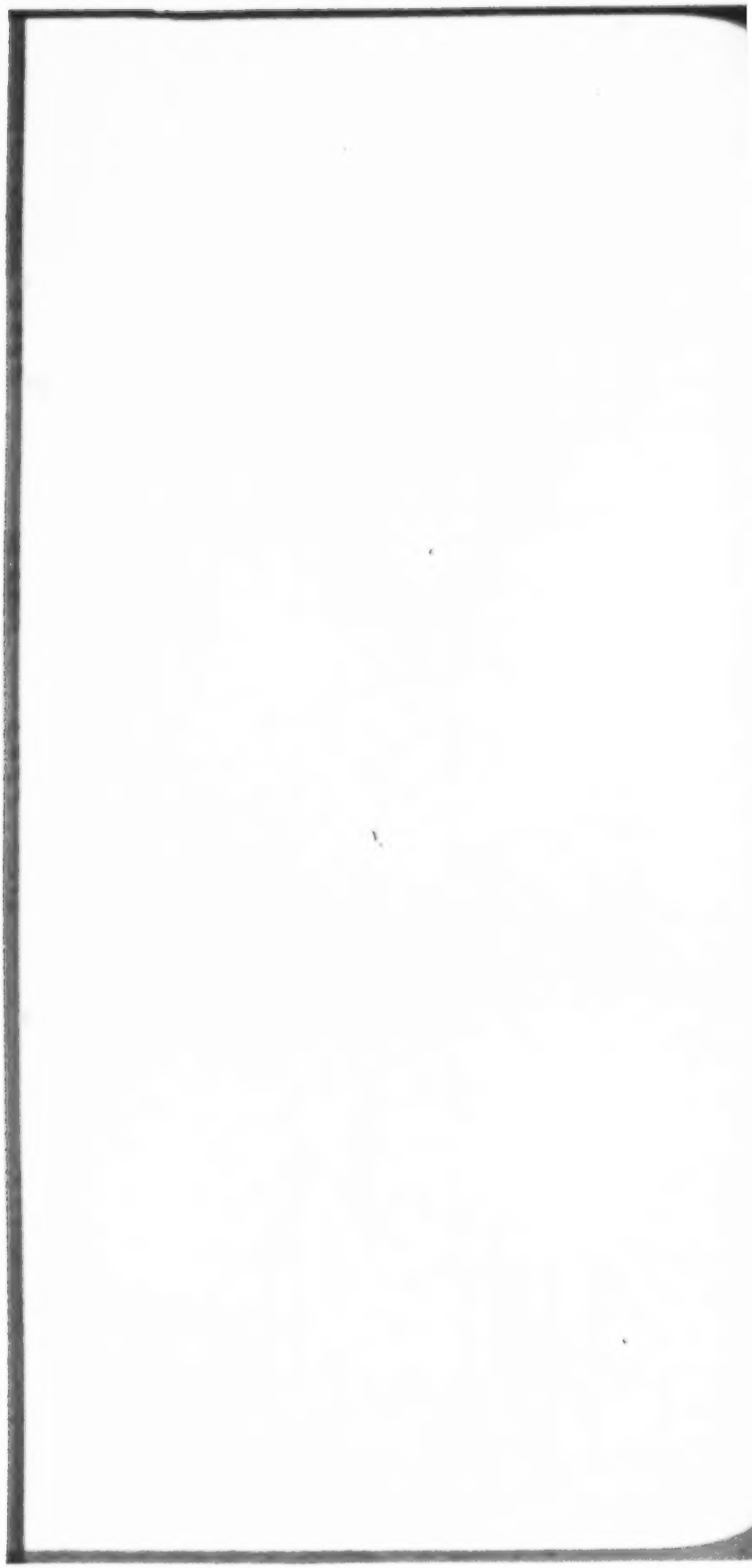

Form 3566 10M—3-26-30

COST SUMMARY

E

E + W

SCHEDULE

PART NAME CAMSHAFT

KIND OF MATERIAL

QUANTITY MAT'L REQ.

SYMBOL A 6250-

WEIGHT ROUGH 11.0#

FINISHED

MONTH OCT 1930

MONTH MAR 1931

MATERIAL PURCHASES						☐ 70 FRT.	MATERIAL PURCHASES						☐
ORDER	DATE	QUANTITY	PRICE	UNIT	DISC.	FRT. RATE	ORDER	DATE	QUANTITY	PRICE	UNIT	DISC.	FR
Dept	153	646700	.0288	#			Dept	153	1397080	2.83	cwt		
	153	276419	.0285	#									
		Over	.0286	#									

AVE. FRT. EA.			AVE. INC. FRT. AND M. H. .0286#				AVE. FRT. EA.			AVE. INC. FRT. AND M. H. .02			
			UNIT COSTS							UNIT COSTS			
DEPT.	SCRAP	PROD'N	MAT'L	LABOR	BURDEN	TOTAL	DEPT.	SCRAP	PROD'N	MAT'L	LABOR	BURDEN	
154		108207	3146	0043	0056	3245	154		123049	3113	0043	0056	
1514	1653	89898		0718	3389	4107	1514	3233	120630		0687	4362	
410	3395	93179		5636	8398	14034	410	4003	96815		5486	9271	1.
2455 Repair		93179		0016	0027	0043	2455 Repair		96,815		0019	0026	
902 Repair		93179		0072	0122	0194	902 Repair		96815		0053	0072	
SCRAP LOSS			0060 0268			0328	SCRAP LOSS			0086 0347			0
MNFG. PLANT COST			3474	6485	1.1992	21957	MNFG. PLANT COST			3541	6288	1.0787	2.
SHIPPING EXPENSE							SHIPPING EXPENSE						
MNFG. PLANT TO BRANCH							MNFG. PLANT TO BRANCH						
DIRECT			154	.2621			DIRECT			[illegible]	[illegible]		
AVE. COST TO BRANCH			1514	4.5431			AVE. COST TO BRANCH				[illegible]		
			410	35.0081						[illegible]	[illegible]		
			2455	.1006							[illegible]		
PAINTING			902	.4443			PAINTING			[illegible]	[illegible]		
TOTAL COST TO BRANCH—SERVICE				40.3582			TOTAL COST TO BRANCH—SERVICE				373[illegible]6		

PLAINTIFF'S EXHIBIT NO. E

1406

Ford Motor Company

[illegible] of Automobiles, Trucks and Tractors

Detroit, U.S.A.

[illegible] Jan 2nd 1924

[illegible]

Attention: Mr. Broughton.

[illegible] IN REPLYING REFER TO [illegible]

ALL STATEMENTS [illegible] CONTRACTS [illegible] CLERICAL ERRORS SUBJECT TO CORRECTION

Will you please refer to order D-48697 calling for [illegible] 10-2-3 and make the following corrections and notations [illegible]

[illegible] first party will furnish 40 steel forgings of Det. 96. These [illegible] have already been sent you.

[illegible] length of the 5/8 pitch ¼" wide roller chain is 28".

[illegible] quantity of steel forgings of Det. 61 and 62 to read [illegible] required" and 5 will be furnished instead of 40, as [illegible] on the original order.

[illegible] first party will furnish 10 steel forgings of Det. 207.

FORD MOTOR COMPANY,

J. Rollins Stewart

Purchasing Department.

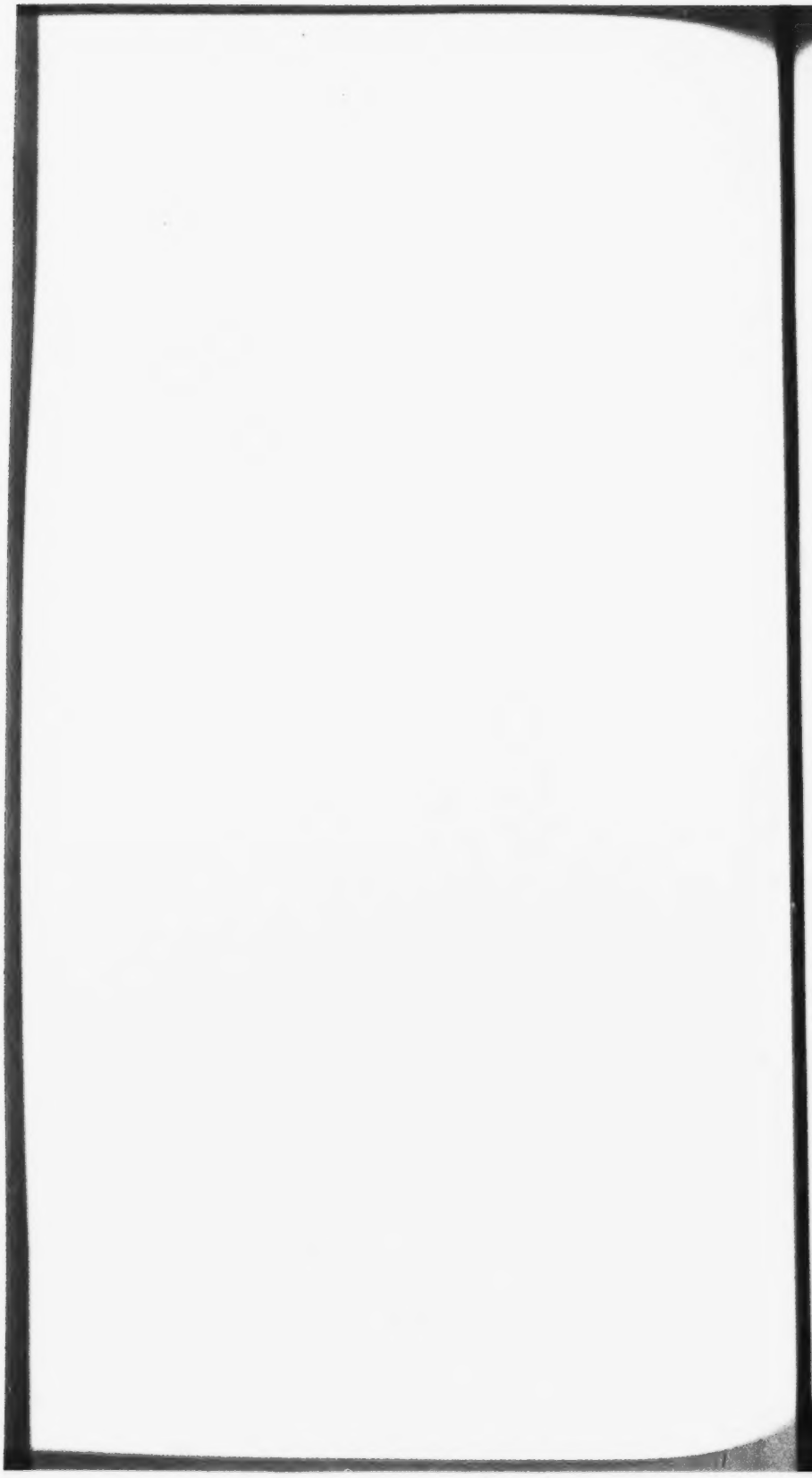

Ford Motor Company

Manufacturers of Automobiles, Trucks and Tractors

Detroit, U.S.A. January 7 1924.

Jackson Shaper Co.,
Jackson, Michigan.

Gentlemen:

IN REPLYING REFER TO P-69

ALL STATEMENTS OR AGREEMENTS CONTAINED IN THIS LETTER ARE CONTINGENT ON STRIKES, ACCIDENTS, FIRES OR ANY OTHER CAUSES BEYOND OUR CONTROL, AND ALL CONTRACTS ARE SUBJECT TO APPROVAL BY THE SIGNATURE OF A DULY AUTHORIZED EXECUTIVE OFFICER OF THIS COMPANY. CLERICAL ERRORS SUBJECT TO CORRECTION.

We are enclosing, herewith, revised blue print #18-Z-3 sheet #9 Pattern "L" changed - to be used in connection with our order D-48697.

Kindly have the above order come forward per this latest revised print, advising us of any additional cost.

Please acknowledge receipt of this revised print, informing us the matter is having your attention.

FORD MOTOR COMPANY

J. Rolland Stewart

Purchasing Dept.

JRS:JR P-69

Ford Motor Company

Manufacturers of Automobiles, Trucks and Tractors

Detroit, U.S.A. January 7 1924.

Jackson Shaper Co.,
Jackson, Mich.

Gentlemen:

IN REPLYING REFER TO P-69

ALL STATEMENTS OR AGREEMENTS CONTAINED IN THIS LETTER ARE CONTINGENT ON STRIKES, ACCIDENTS, FIRES OR ANY OTHER CAUSES BEYOND OUR CONTROL, AND ALL CONTRACTS ARE SUBJECT TO APPROVAL BY THE SIGNATURE OF A DULY AUTHORIZED EXECUTIVE OFFICER OF THIS COMPANY. CLERICAL ERRORS SUBJECT TO CORRECTION.

We are enclosing, herewith, revised blue print #18-Z-3 sheet- #62 det. 223 changed, to be used in connection with our order D-48697.

Kindly have the above order come forward per this latest revised print, advising the writer of any additional cost.

Please acknowledge receipt of this revised print, informing us the matter is having your attention.

FORD MOTOR COMPANY

J. Rolland Stewart

January 10, 1934.

Ford Motor Company
Purchasing Dept.
Detroit, Michigan.

Gentlemen; Attention J. R. Stewart.

We acknowledge your letter of January 7th with revised print #18-Z-3 sheet #9.

We will have this machine come forward per this revised print and there will be no additional cost.

Yours very truly,

Jackson Shaper Company.

LEB/MJ

General Manager.

January 10, 1924.

Ford Motor Company
Purchasing Dept.
Detroit, Michigan.

Gentlemen; Attention J. R. Stewart.

We hereby acknowledge your letter of January 7th with revised print #18-Z-3 sheet #62, detail #223 changed.

We have had this detail whic is a gear, bored and turned complete, ready to cut teeth, so it will be necessary for us to make them up again.

The labor performed on this detail amounts to $13.20 per machine. It will also be necessary to furnish us sufficient AAA steel for ten of these details #223.

Will youalso please send us two additional revised prints #18-Z-3 sheet #62.

Yours very truly,

Jackson Shaper Company.

General Manager.

LFB/[illegible]

Telephone Mr Stewart Jan 15th 1924
OK to use gears with reamed hole

Ford Motor Company

Manufacturers of Automobiles, Trucks and Tractors

Detroit, U.S.A. January 12 1924.

Jackson Shaper Co.,
Jackson, Mich.

Gentlemen:

IN REPLYING REFER TO P-69

ALL STATEMENTS OR AGREEMENTS CONTAINED IN THIS LETTER ARE CONTINGENT ON STRIKES, ACCIDENTS, FIRES OR ANY OTHER CAUSES BEYOND OUR CONTROL AND ALL CONTRACTS ARE SUBJECT TO APPROVAL BY THE SIGNATURE OF A DULY AUTHORIZED EXECUTIVE OFFICER OF THIS COMPANY. CLERICAL ERRORS SUBJECT TO CORRECTION

We are enclosing, herewith, revised blue print #18-Z-3 complete - (See change column) sheets 3-11-18-2-6-1, to be used in connection with our order D-48697.

Kindly have the above order come forward per this latest revised print, informing us of any additional cost.

Please acknowledge receipt of this revised print, informing us the matter is having your attention.

FORD MOTOR COMPANY

J. R. [illegible]

Purchasing Department

JRS:JM

Ford Motor Company

Manufacturers of Automobiles, Trucks and Tractors

Detroit, U.S.A. January 12 1924.

Jackson Shaper Co.,
Jackson, Mich.

Gentlemen:

IN REPLYING REFER TO P-69

We are enclosing, herewith, revised blue print #18-Z-3 det. 20 sheet 29 (Part T-410)(See change column) to be used in connection with our order D-48697.

Kindly have the above order come forward per this latest revised print, advising the writer of any additional cost.

Please acknowledge receipt of this revised print, informing us the matter is having your attention.

FORD MOTOR COMPANY

J. R. [illegible]

Purchasing Department.

JRS:JM

January 14, 19..4.

Ford Motor Company
Purchasing Dept.
Detroit, Michigan.

Gentlemen; Attention J. R. Stewart.

We acknowledge receipt of your letter of January 12th enclosing revised print 18-Z-3 detail #20, sheet #29.

Inasmuch as this detail hasnbot been placed in work, there will be no additional charge.

Yours very truly,

Jackson Shaper Company.

LFR/MJ

General Manager.

January 18, 1924.

Ford Motor Company
Purchasing Dept.
Detroit, Michigan.

Gentlemen; Attention J. R. Stewart.

We hereby acknowledge your letter of January 12th enclosing revised blue prints 18-Z-3 sheets 1-2-3-6-11-18.

We had some of this work started and from conversation which we had with your tool design department last Tuesday, we will be able to bring this work through without any additional cost.

Yours very truly,

Jackson Shaper Company.

LFR/MJ

General Manager.

Ford Motor Company

HIGHLAND PARK, MICH.

ORIGINAL

This Order Number must appear on all Packing Slips, Bills of Lading, Machines, Packages and Invoices

[illegible] COMPANY, of Highland Park, Michigan, first party,
[illegible] purchase and receive, and

Jackson Shaper Company
Jackson
Michigan

Purchase Order No. D 48697

Date 1-18-24

DELIVERY REQUIRED

3 months after receipt of patterns

[illegible] agree to manufacture, sell and deliver materials specified below, subject to the terms and conditions stipulated:

[illegible] VIA: MC from Jackson - Prepaid

[illegible]: 2% 20th prox or net 60 days

[illegible]: Our Highland Park Plant

ANY AMOUNTS SHIPPED IN EXCESS OF THE QUANTITY SPECIFIED WILL NOT BE ACCEPTED.

[illegible]	DESCRIPTION OF MATERIAL	PRICE
[illegible]	18 Z 3 Complete Special Machine for Shaping (8) Cams on camshaft at one time T-410 each	$ 6,500.00

Make: (20) 19 Z 31 Det. 3
(10) 19 Z 31 Det. 8
(15) 19 Z 21 Det. 29
(5) 19 Z 21 Det. 13
(10) 19 Z 21 Det. 19
(80) 19 Z 31 Det. 21
(10) 19 Z 31 Det. 19
(45) 19 Z 14 Det. 2
(5) 19 Z 21 Det. 17
(40) 19 Z 31 Det. 10

Second party will furnish necessary castings.
First party will furnish patterns:
18 Z 3 A-B-C-D-E-U3-A3-L3-M3-J3-T3-S3-G3-F3-E3-
R3-M3-D3-C3-Z3-A3-B3-Y2-X2-V2-W2-T2-U2-S2-
P2-V3-Q2-R2-N2-P3-Q3-M2-N3-J2-K2-L2-N2-P2-
G2-D2-E2-B2-C2-Z-A2-X-Y-V-W-T-U-R-S-Q-N-P-
L-M-K-H-J-G-F.

First party will furnish (no charge)
(40) Det. 237 ready to assemble
(5) of Dets. 175-176 to assemble

(Concluded on Page 2)

CONDITIONS

[illegible]: This order constitutes an offer on the part of First Party upon the conditions and terms and at the prices stated herein, and to constitute a binding contract upon First Party, said offer must be accepted by execution of the acknowledgment in the form attached hereto by Second Party, it being expressly understood that no other form of acceptance, verbal or written, will be valid or binding upon First Party. There are no agreements or understandings other than those contained in this order.

[illegible]: No charges will be allowed for crating, boxing or drayage unless stated herein.

[illegible]: Materials purchased are subject to First Party's inspection and approval and if rejected, will be held at Second Party's risk and returnable at Second Party's expense.

[illegible]: All invoices must be rendered in duplicate, prices and extensions to appear on original only. Separate invoices required for each individual shipment.

[illegible]: Original bills of lading or express receipts, etc., properly signed by carrier representative, must be attached to the Second Party's invoices and both mailed to Ford Motor Co., Detroit, Mich., Attention Purchasing Department, not later than day after shipment. In case shipments are consigned to the First Party's Branch Assembly Plants, original bills of lading should be sent to the branch, while the signed duplicates should be forwarded to Detroit, Mich., with the Second Party's invoices.

[illegible]: First Party will not receipt for materials unless accompanied by packing slips. Original packing slips for carload lots must be enclosed in envelope (unsealed), addressed to Ford Motor Co., and tacked inside car near door. Original packing slips for L. C. L. shipments must be placed in each package. Copies relating to ALL shipments to be mailed direct to Ford Motor Co., at point of destination, "Attention Receiving Room."

[illegible]: To insure settlements as agreed, statement of account should be rendered monthly, in time to reach the First Party by the fifth proximo.

[illegible]: First Party reserves the right to cancel this order or any part thereof, if material is not shipped according to deliveries above specified, or for causes due to any acts or demands of the United States Government, or to fires, strikes, or other causes beyond First Party's control, or if material is not in accordance with blue prints, approved samples or specifications, or is defective in workmanship or material, or is not satisfactory to First Party.

[illegible]: Second Party guarantees that the sale or use of its products will not infringe any United States or foreign patent, and undertakes to indemnify First Party against all judgments, decrees, costs and expenses resulting from such alleged infringement, and covenants that Second Party will upon request of First Party and at Second Party's own expense, defend, or assist in the defense of, any suit or action which may be brought against First Party or those selling or using any products of First Party by reason of any alleged infringement of any patent in the sale or use of Second Party's products.

[illegible]: The price herein specified is based on present rate of freight and any reduction in present freight rates is to be credited to the account of the First Party.

Ford Motor Company

By _____
Purchasing Dept.

Purchase Order No. D 48697

Ford Motor Company

HIGHLAND PARK, MICH.

Page No. 2 Continued from Page No. 1 Purchase Order No. D 48697

Ordered From Jackson Shaper Company Date 1-18-24

DESCRIPTION OF MATERIAL

(Continued - first party will furnish (no charge)):

(5) 19 Z 51 Oil boxes with oil gauges.
(40) 19 Z 25 Int. 6
(5) pcs 3611 Diamond Cable Chain 76" long
(5) pcs 5/8 pitch 1/4" wide Roller Chain Dia of roller .400"
Necessary stud for (5) dets. 1-25-26-41-43-66-129-132-133-228
(40) of Dets. 58-61-62-64
(1[illegible]) of Dets. 65-179-206-223
(20) of Dets. 97-95
Also will ship pattern 19 Z 3-V-3

All patterns are placed with the second party strictly at the second party's risk, fob second party's plant charges fully prepaid. On completion of orders, return patterns fob first party's plant, charges fully prepaid. In case of destruction by fire or otherwise, replacement must be made at second party's expense. The first party will not assume responsibility for patterns while in the second party's possession.

Per your quotation 12-11-23, our inquiry # 42584

Confirming telephone order to Mr. Broughton 12-12-23

Mark and Consign: HIGHLAND PARK PLANT
Ford Motor Co
(for order D 48697)
Detroit Mich

JHS HSS
72884
M 1-19
PO X-59530
Req. 16362

Ford Motor Company By J. Rolland Stewart
Purchasing Dept.

Purchase Order No. D 48697

CLASS OF SERVICE SYMBOL
Day Letter
Night Message
Night Letter
If none of these three symbols appears after the check number of words this is a telegram. Otherwise its character is indicated by the symbol appearing after the check.

WESTERN UNION TELEGRAM

NEWCOMB CARLTON PRESIDENT GEORGE W. E. ATKINS FIRST VICE-PRESIDENT

CLASS OF SERVICE SYMBOL
Day Letter
Night Message
Night Letter
If none of these three symbols appears after the check number of words this is a telegram. Otherwise its character is indicated by the symbol appearing after the check.

RECEIVED AT
27Z X 12 1 EXTRA

FD DETROIT MICH 1035A JAN 21 1928

JACKSON SHAPER CO 30

JACKSON MICH

OK MAKE EIGHTEEN Z THREE DETAIL FIFTY TWO OF TOOL STEEL

FORD MOTOR CO STEWART

1047A

Ford Motor Company

Manufacturers of Automobiles, Trucks and Tractors

Detroit, U.S.A.

Jackson Shaper Co.,
Jackson
Michigan

Jan 2[illegible] 1924

ATTENTION - Mr. Broughton

Gentlemen: [illegible] P-69

ALL STATEMENTS OR AGREEMENTS CONTAINED IN THIS LETTER ARE CONTINGENT ON STRIKES [illegible] CONTRACTS ARE SUBJECT TO APPROVAL BY THE SIGNATURE OF [illegible]

This will confirm our telegram to you today, authorizing you to make 18-Z-3 detail 52 of tool steel. We believe it will work out to better advantage making this part of tool steel than of triple "A" steel as specified on our order. You will remember this is the part that you talked over with our toolmaker when last at our office, with reference to the hardness on the ends where the wear would come.

FORD MOTOR COMPANY

J Holland Stewart

Purchasing Department

JRS:MTB

Ford Motor Company

Manufacturers of Automobiles, Trucks and Tractors

Detroit, U.S.A. January 22 1924.

Jackson Shaper Company
Jackson, Michigan.

Gentlemen:

IN REPLYING REFER TO P-69

ALL STATEMENTS OR AGREEMENTS CONTAINED IN THIS LETTER ARE CONTINGENT ON STRIKES, ACCIDENTS, FIRES OR OTHER CAUSES BEYOND OUR CONTROL. CONTRACTS ARE SUBJECT TO APPROVAL BY THE SIGNATURE OF A DULY AUTHORIZED EXECUTIVE OFFICER OF THIS COMPANY.

We are enclosing, herewith, revised blue print #10-2-3 sheet #40 [illegible] M3 changed, to be used in connection with our order D-48697.

We are also enclosing revised blue print #[illegible] sheet #55 to be used in connection with order D-48697.

Kindly have the above order come forward [illegible] latest revised print, advising the writer of any additional cost.

Please acknowledge receipt of these revised prints, informing us the matter is having your attention.

FORD MOTOR COMPANY
Purchasing Department

JPS:M

FORD FORM 3288

Contractor's Material Order

2nd Copy
Contractor's Copy
To be Retained by Contractor

THE FORD MOTOR COMPANY of Highland Park, Michigan
Seller, agrees, to sell

Order No. R 22026
Date 1-25-24.

And Jackson Shaper Co.,

of Jackson, Mich.

Buyer, agrees to buy and accept materials specified below subject to the terms and conditions stipulated:

SHIP VIA Exp

TERMS 30 Days Net from Date of Shipment

Refer to Ford Motor Co.

F. O. B. Cars, Railroad Point of Delivery

Order No. D-48697

QUANTITY	SYMBOL		PRICE
6	18-2-3	Cam Shaper Machine - AAA Steel Forgings for 18-2-3 Detail 96	
		Material -	at cost
		Labor - Per hr	1.25
JRS FD			
PHO W 9485			

CONDITIONS

1. Title and right to possession of said material shall be and remain in Seller until paid for in full.
2. All such material where title and right to possession have not passed to Buyer shall be held at Buyer's risk and shall [illegible] be insured at Buyer's expense in an amount and company to be approved by the Seller.
3. In case the Seller shall deem itself insecure in obtaining performance of this contract, it may terminate same without notice and retake possession of all such material, where title and right to possession have not passed to Buyer, with or without legal process.
4. Where title and right to possession have not passed to Buyer it is agreed that Buyer will keep said material separate and apart, marked "Property of Ford Motor Company," so that it may be readily identified. Said material shall not be removed from Buyer's plant unless on written direction of Seller, except for purposes of fabrication.
5. Buyer will, at all reasonable times, keep separate account of such material, so kept separate and apart, where title and right to possession have not passed to Buyer, and will furnish reasonable statements on request giving detailed description and location of such material as well as any other information asked for by Seller. Seller shall have right at all reasonable times to check and inspect such material and Buyer's records thereof.
6. Buyer agrees to waive and hereby waives any lien that he has or may hereafter have on such material.
7. [illegible] shall govern construction of this contract.

IMPORTANT

[illegible] Co., Detroit, Michigan.
[illegible] COPY FOR YOUR FILES

(Firm)

By

(Officer of Company)

Order No. R 22026

Ford Motor Company

Manufacturers of Automobiles, Trucks and Tractors

Detroit, U.S.A.

Jackson Shaper Co
Jackson
Mich

Gentlemen: IN REPLYING REFER TO P-60.

ALL STATEMENTS OR AGREEMENTS CONTAINED IN THIS LETTER ARE CONTINGENT ON STRIKES, ACCIDENTS, FIRES OR ANY OTHER CAUSES BEYOND OUR CONTROL AND ARE SUBJECT TO APPROVAL BY THE SIGNATURE OF A DULY AUTHORIZED EXECUTIVE OFFICER OF THIS COMPANY. CLERICAL ERRORS SUBJECT TO CORRECTION.

We wish to call your attention to the following [illegible]

D-48697 D-48678.

Inasmuch as we are in urgent need of the above [illegible] request that you do all in your power to maintain or better [illegible] dates specified on the above orders.

An expression from you concerning the above will [illegible]

FORD MOTOR COMPANY.

J. T. Hughes
Purchasing Department.

JTG*MH.

Ford Motor Company

Manufacturers of Automobiles, Trucks and Tractors

Detroit, U.S.A.

Jackson Shaper Co
Jackson
Mich

February 8 19[illegible]

Gentlemen: IN REPLYING REFER TO Mr A M Wibel

ALL STATEMENTS OR AGREEMENTS CONTAINED IN THIS LETTER ARE CONTINGENT ON STRIKES, ACCIDENTS, FIRES OR ANY OTHER CAUSES BEYOND OUR CONTROL AND ARE SUBJECT TO APPROVAL BY THE SIGNATURE OF A DULY AUTHORIZED EXECUTIVE OFFICER OF THIS COMPANY. CLERICAL ERRORS SUBJECT TO CORRECTION.

Kindly give us, when completed, for record purposes, the net weight of the special Machine for shaping cams on camshaft, covered by our order D-48697, our Requisition #16362.

FORD MOTOR COMPANY
Engineering Dept

February 12, 1924.

Ford Motor Company
Purchasing Dept.
Detroit, Michigan.

Gentlemen; Attention J. R. Stewart.

We have just received one pattern and core box marked 18-2-5 - M5 and we cannot find any blue print covering this piece, neither can we find it on the assembly drawing.

Will you please look into this and send us blue print showing this pattern.

Yours very truly,

Jackson Shaper Company.

LKP/MJ

General Manager.

Ford Motor Company

Manufacturers of Automobiles, Trucks and Tractors

Detroit, U.S.A.

Jackson Shaper Company
Jackson
Michigan

February 19 1924

Gentlemen: IN REPLYING REFER TO P-82-2

ALL STATEMENTS OR AGREEMENTS CONTAINED IN THIS LETTER ARE CONTINGENT ON STRIKES AND ACCIDENTS, FIRES OR ANY OTHER CAUSES BEYOND OUR CONTROL AND ALL CONTRACTS ARE SUBJECT TO APPROVAL BY THE SIGNATURE OF ANY AUTHORIZED EXECUTIVE OFFICER OF THIS COMPANY. CLERICAL ERRORS SUBJECT TO CORRECTION

Referring to purchase order D-48697 covering 5 only 18-Z-5 complete special machines for shaping 8 cams on camshaft at one time.

Kindly expedite the matter of obtaining your castings from patterns 18-Z-3P 2, and 18-Z-3R 2 which were delivered to you on delivery order #90912 on Feb 4th, 1924.

It is necessary that we have these patterns at the earliest possible moment in order that we may obtain castings for the repairs on machines which are down at the present time.

Kindly ship these patterns by express, addressed for the attention of Mr. Hodges, Casting Stock, Highland Park plant.

FORD MOTOR COMPANY
[illegible]
Purchasing Department

[illegible]

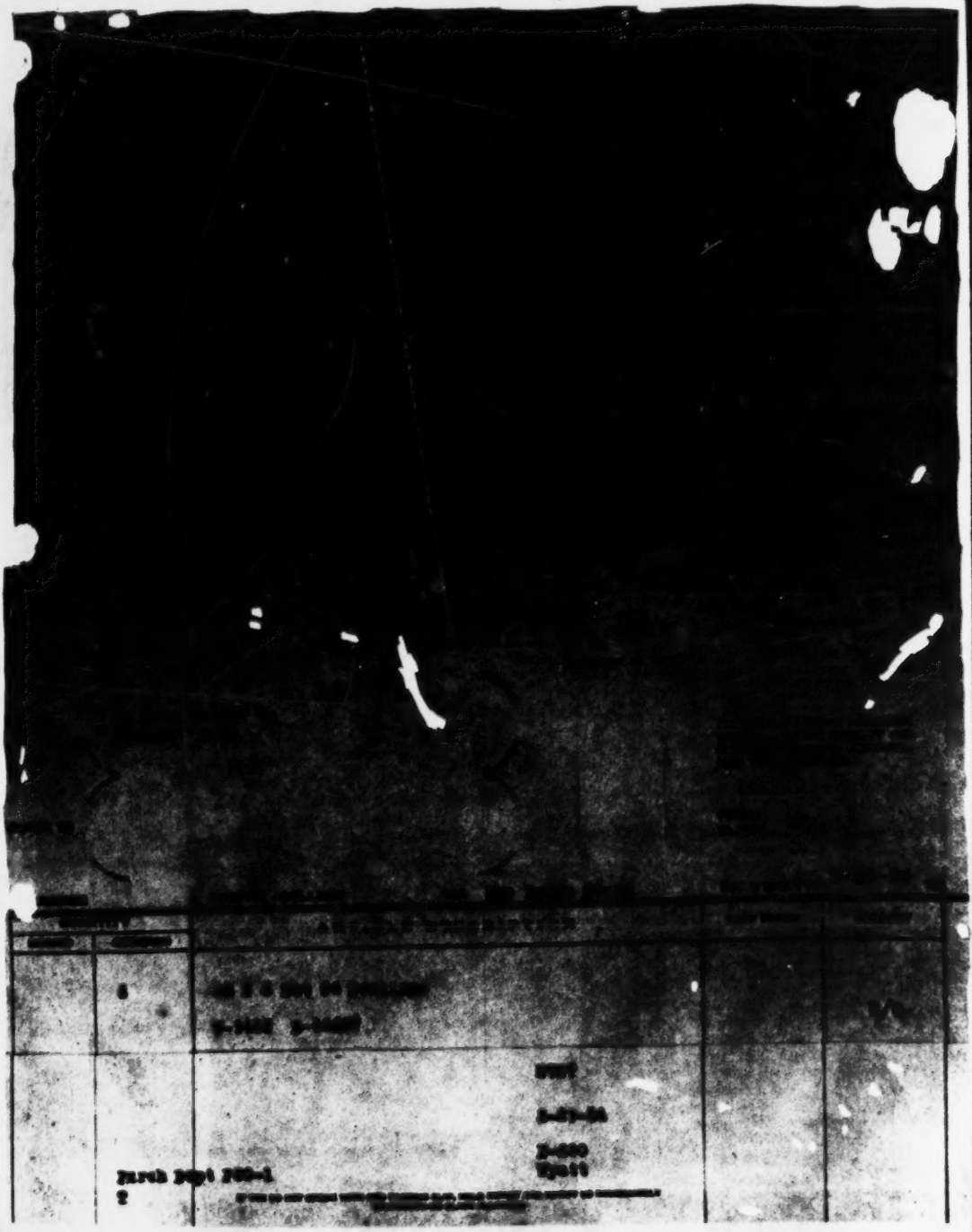

March 4, 1924.

Ford Motor Company
Purchasing Dept.
Detroit, Michigan.

Gentlemen; Attention J. R. Stewart.

We have had nine hours pattern work, amount $11.25 on your order #16-Z-3, as you no doubt remember some of the patterns were sent to us in a broken condition.

Willyou please advise us that it will be all right to add this amount to your order #D-48697.

Yours very truly,

Jackson Shaper Company.

LFF/WJ

General Manager.

Form 1507

Ford Motor Company

CHANGE NOTICE Date 3-5-24

Please note we have made the following change on indicated purchase order issued in your favor.
Kindly correct your records accordingly acknowledging receipt by return mail

Firm Jackson Shaper Co.

Rec. Memo. Date

PO. D-48697 RA Symbol 18 X 3

MATERIAL Machines for shaping cam shafts

YOU ARE AUTHORIZED TO MAKE THE FOLLOWING CHANGE:

Price—from to add 11.25 ea

Terms—from to

Specifications—from to

Quantity—from to

REASON Cost of repairing patterns furnished by Ford Motor Co.

Change Item	Case No.	Weight
		From To

RECEIVING DEPT.—If in order make change indicated.

O. K. Signed J R Stewart Department

Change on Memo.

March 25,1924.

Ford Motor Company,

Detroit, Mich.

Gentlemen: Attention Mr. J.R.Stewart

Complying with your request of yesterday, we submit herewith cost figures on Machine 18 ℄ 3 your order D48697. Work on this order has been held up, awaiting your further instructions.

Yours very truly,

JACKSON SHAPER COMPANY

LEB/L General Manager

March 24,1934.

Time and material on Cam Machine 18 ℄ 3 to date.

Iron Castings	26,250 #	$ 1,575.83
Bronze	2,374 #	712.62
Steel Castings	5,390 #	565.35
Steel Forgings		506.75
C.R. & Mach Steel		257.87
Tool Steel		88775
Screws & Nuts		14.73
Drill Rod		3.87
Pattern Work		37.37
Gear Cutting		186.35
Special Tools		118.07
Tubing		6.15
Heat Treating		30.50
Sprockets		17.00
Miscellaneous		175.95
Total Material		4276.16
Plus 10%		427.61
Freight		194.00
Labor, 10,217½ hours @$1,50		15326.25
		20224.02

Form 1207

Ford Motor Company

CHANGE NOTICE Date 3/12/24

Please note we have made the following change on indicated purchase order issued in your favor.
Kindly correct your records accordingly acknowledging receipt by return mail.

Firm Jackson Shaper Co.

Rec. Memo. Date

Dept. PO D-48697 RA Symbol 18-2-3

MATERIAL Machine for shaping cams.

YOU ARE AUTHORIZED TO MAKE THE FOLLOWING CHANGE:

Price—from Add a $231.81 to lot to

Terms—from to

Specifications—from to

Quantity—from to

REASON Cost of changing 5 pcs. det. 1 - 10 pcs. det. [illegible]
from 3-4 steel to tool steel - per our instructions [illegible]

Change Item letter 3/10/24 Case No. From Weight

RECEIVING DEPT.—If in order make change indicated.

O. K. Signed JRS: JM P-69 Purch.

Ford Motor Company

Manufacturers of Automobiles, Trucks and Tractors

Detroit, U.S.A.

March 24 1924.

Jackson Shaper Company
Jackson
Mich
Gentlemen: EMPLOYEES REFER TO P-82-1.

Kindly expedite the matter of obtaining your castings from pattern 18-2-3 S-2, which we delivered to you under date of December 17th, 1923, on our D.O. 66811, to be used in connection with purchase order D-48697.

It is necessary that we have these patterns at the earliest possible moment in order that we may obtain castings for the repairs of machines which are down at the present time.

Kindly ship this pattern via express addressed for the attention of Mr. Hodges, Castings Stock, Highland Park Plant, advising the writer the date shipment leaves your plant.

FORD MOTOR COMPANY.

[illegible] Purchasing Department.

[illegible].

March 26, 1924.

Ford Motor Company
Purchasing Dept.
Detroit, Michigan.

Gentlemen: Attention M. A. Belknap.

We acknowledge your letter of March 24th and will return this pattern to you within the next few days.

Yours very truly,

Jackson Shaper Company.

LFB:MJ

General Manager.

March 30, 1924.

Ford Motor Company
Purchasing Dept.
Detroit, Michigan/

Gentlemen; Attention J. R. Stewart.

We have made up the following parts on the 18-Z-3 machine which were changed from triple "A" steel to tool steel;

5 - Detail #1.
10 - " 179.
40 - " 52.

210 lbs. tool steel		$57.75
139-1/4 hrs. Labor @	$1.25.-	174.06
	Total	$231.81

Total to apply against your order # D-48697.

Yours very truly,

Jackson Shaper Company.

LFB/MJ

General Manager.

Ford Motor [illegible]

[illegible]

Detroit, [illegible]

Jackson Shaper Co
Jackson
Mich

Gentlemen:

IN REPLYING REFER TO [illegible]

ALL STATEMENTS OR AGREEMENTS CONTAINED IN THIS LETTER ARE CONTINGENT [illegible]
CONTRACTS ARE SUBJECT TO APPROVAL BY THE SIGNATURE OF A DULY AUTHORIZED [illegible]

Attached you will find our check [illegible] to apply on account.

FORD MOTOR COMPANY

N Fuller
Auditor of Disbursements

April 5, [illegible]

Ford Motor Company
Auditor of Disbursements
Detroit, Michigan.

Gentlemen; Attention N. Fuller.

We acknowledge with thanks your letter of April 5th enclosing check for $10000.00 to apply on account.

Yours very truly,

Jackson Shaper

LFB:WJ

General [illegible]

1460

April 22, 1924.

Ford Motor Company
Purchasing Dept.
Detroit, Michigan.

Gentlemen; Attention J. R. Stewart.

Please refer to your order #D-48697 covering five machines 18-B-3 for machining cam shafts.

It is now four weeks since you had us stop work on this order and we would very much appreciate a word from you as to the disposition of the order or material on hand.

Yours very truly,

Jackson Shaper Company.

LFB/MJ

General Manager.

Ford Motor Company

Manufacturers of Automobiles, Trucks and Tractors

Detroit, U.S.A.

Jackson Shaper Company
Jackson
Mich

April 24 1924

Attn. Mr. Broughton

Gentlemen:

IN REPLYING REFER TO P-69

ALL STATEMENTS OR AGREEMENTS CONTAINED IN THIS LETTER ARE CONTINGENT ON STRIKES ACCIDENTS FIRES OR ANY OTHER CAUSE BEYOND OUR CONTROL AND ALL CONTRACTS ARE SUBJECT TO APPROVAL BY THE SIGNATURE OF A DULY AUTHORIZED EXECUTIVE OFFICER OF THIS COMPANY

Acknowledging your letter of April 7th with reference to order #D-48697 for 5 machines 18B-3 are pleased to inform you that Mr. Duffy has this matter up with our Superintendent's office and expects to be able to give you disposition of this material sometime within the next week.

Thanking you for drawing this to our attention, we are

FORD MOTOR COMPANY
J. Rollan Stewart
Purchasing Department

JRS:AO

Ford Motor Company

Manufacturers of Automobiles, Trucks and Tractors

Detroit, U.S.A.

Jackson Shaper Company
Jackson
Mich

April 24 1924

Attn. Mr. Broughton

Gentlemen:

IN REPLYING REFER TO P-69

ALL STATEMENTS OR AGREEMENTS CONTAINED IN THIS LETTER ARE CONTINGENT ON STRIKES, ACCIDENTS, FIRES OR ANY OTHER CAUSES BEYOND OUR CONTROL AND ALL CONTRACTS ARE SUBJECT TO APPROVAL BY THE SIGNATURE OF A DULY AUTHORIZED EXECUTIVE OFFICER OF THIS COMPANY. CLERICAL ERRORS SUBJECT TO CORRECTION

The writer is surprised to learn that you still have in your possession all of the patterns for machine 18s-412. These machines you built for us you delivered along the later part of February and the patterns should have been returned at that time or prior thereto. Right now we are very anxiously in need of patterns X and W so wired you today to return by electric freight all of the patterns for this job, marking the same for Castings stock Department and sending them to our Highland Park plant.

Along the line of patterns you may use this as your authority to return to us the patterns for machine 18Z-3, these patters may be boxed and returned to our Rouge plant, B Building. Please see that this is properly taken care of.

FORD MOTOR COMPANY

J Rolland Stewart

PURCHASING DEPARTMENT

JR:AO

April 26, 1924.

Ford Motor Company
Purchasing Dept.
Detroit, Michigan.

Gentlemen; Attention J. R. Stewart.

We acknowledge your letter of April 24th confirming your telegram regarding patterns 18-Z-412.

These went forward on the 24th and the 18-Z-3 patterns will be shipped either today or Monday.

We regret that the 18-Z-412 patterns were not returned sooner and will keep a closer tab on the return of patterns in the future.

Yours very truly,

Jackson Shaper Company.

Ford Motor Company,

Manufacturers of Automobiles Trucks and Tractors

Detroit U.S.A. April 28, 1924

Jackson Shaper Company,
Jackson,
Michigan

Attention - Mr. L. E. Broughton

Gentlemen:

D-16

We are authorizing our Disbursement Department to honor your Invoice for $20,224.02 to cover Material, Freight and Labor to time of cancellation of our Order D-48697 covering 5 Cam Shapers as per blueprint 18 - Z - 3. We are however, also instructing the above Department to deduct from your account $219.52: This amount being the salvage and freight you advised you would allow providing we left the material at Jackson, and arrived at as follows:

Bronze	1000 lbs. @	.13	$130.00
"	338 "	.30	101.40
Cast Iron	2200 "	.01	220.00
" Steel	2000 "	.005	10.00
Steel Shaft etc.	2000 "	.01	20.00
	Total.....		$ 481.40
Plus allowance for Freight			138.12
Grand Total.....			$ 619.52

Kindly advise by return mail if this is in accordance with your understanding.

FORD MOTOR COMPANY,

Purchasing Department

k

April 29, 1924.

Ford Motor Company
Purchasing Dept.
Detroit, Michigan.

Gentlemen; Attention H. A. Duffey.

We acknowledge your letter of April 28th regarding your order #D-48697 covering five Cam Shapers 18-2-3.

The disposition of material by us and deduction of $619.52 from our account is in accordance with our previous conversation with your Mr. Stewart when he was here and checked up the job.

Yours very truly,

Jackson Shaper Company.

LFB:MJ

General Manager.

Ford Motor Company

No. 679276	ACCOUNT NO.	DEPT. CHG.	FACTORY WORK ORDER NO.	APPROVE
679276	270	410	E-6[illegible]31	D.

ASSIGNED	CAST IRON	STEEL	NI CHROME	BRONZE	AL BRONZE	ALUMINUM	BRASS

Z NUMBER	DETAIL	PART NO	PATTERN NUMBER	PATT. LETTER

-.-.35472 ve. ul for -6250.

-.69
-.15
-.00
-71.-
G.
Adams
Al.Smith
Brown
Ayers.

Mov. Rolling Stn Le ne o.-. 35472 from K-7 Motor Plat.
(assigned to -6250) to N-5 Foundry.

-ven al for oper. 1[illegible] ; chin was on -6250 Crankshaft.

REASON o . -ayers.

DATE	REQUESTED BY	OF DEPT.	LOCATION	FOR DEPT.	LOCATION OF JOB	SUPT. O. K.
6-3-29	J.Herriots	N-11 A	-[illegible].	41^	K. to Plat.	

Form 2061
3-29-11-12-28

PLAINTIFF'S EXHIBIT NO. P-1

Ford Motor Company

No. 144431	ACCOUNT NO.	DEPT. CHARGE	FACTORY WORK ORDER NO.
	270	410	E-6-3-75

THESE SPACES TO BE USED FOR ORDERING CASTINGS

ASSIGNED	NO. WANTED	KIND OF METAL	PATTERN NO.	DELIVERED

NO. WANTED	Z OR S NUMBER	DETAIL	PATTERN	FORGING	S. P.

~~N-[illegible]~~ Please move cam lathe 36592
N-316 from K-7 to N-711-C Foundry
N-306 O.K. FILE Tool Room.
N-316 Disconnect all pipes XX Rush
N-711C-Overhaul to put in reliefs they
REASON To be repaired for R-6250

DATE	REQUESTED BY	DEPT.	LOCATION	FOR DEPT.	LOCATION OF JOB	SUPT'S O. K.
11/14		410	F-6	410	K-7	

FORM 2062
3-29-11-12-28

PLAINTIFF'S EXHIBIT NO. P-2

Ford Motor Company

SERIAL	ACCOUNT NO.	DEPT. CHG.	FACTORY WORK ORDER NO.	APPROVE
№ 679429 679429	270	410	E16827	D.

ASSIGNED	CAST IRON	STEEL	NI CHROME	BRONZE	AL BRONZE	ALUMINUM	BRASS
	Z-NUMBER		DETAIL	PART NO.	PATTERN NUMBER		PATT. LETTER

B.T. 36928 Overhaul for A-6250.

N-711-C
N-309
N-316
N-700

CC

Kellogg
Al.Smith
Myers.

W.T.

Move Milling Cam Lathe B.T. 36928 from A-8 Motor Bldg. (Assigned to A-6250) to B-58 Fdry.

Overhaul for Opr. #13; Turn Cam on A-6250 Camshaft.

SPECIAL AUTH

SEP 13 1929

O.K. FILE

REASON

DATE	REQUESTED BY	OF DEPT.	LOCATION	FOR DEPT.	LOCATION OF JOB	SUPT. O. K.
7-3-29	R.Herklots	B-519-A	B-Bldg.	410	Motor Bld'g.	

Form 2003 8M32—11-16-28

PLAINTIFF'S EXHIBIT NO. P-3

Ford Motor Company

SERIAL	ACCOUNT NO.	DEPT. CHG.	FACTORY WORK ORDER NO.	APPROVE
№ 758115 758115	270	410	E34478	Dc

ASSIGNED	CAST IRON	STEEL	NI CHROME	BRONZE	AL BRONZE	ALUMINUM	BRASS
	Z-NUMBER		DETAIL	PART NO.	PATTERN NUMBER		PATT. LETTER

B.T. 36812

N-711-C
N-309
N-316

CC

Kellogg
A.Smith
Myers.
Hill

Move Milling Cam Lathe B.T. 36812 from K-7 Motor Bldg. (Assigned to A-6250) to B-58 Fdry.

Overhaul for opr. #13; turn cams on A-6250 Camshaft.

O.K. FILE

REASON Req. Auth.

DATE	REQUESTED BY	OF DEPT.	LOCATION	FOR DEPT.	LOCATION OF JOB	SUPT. O. K.
8-23-29	R. Herklots	[illegible]	B-Bldg.	410	Motor Bldg.	

Form 2003 8M32—11-16-28

PLAINTIFF'S EXHIBIT NO. P-4

Ford Motor Company

SERIAL	ACCOUNT NO.	DEPT. CHG.	FACTORY WORK ORDER NO.	APPROVED
Nº 791519	270	410	E-40938	Dc

ASSIGNED	CAST IRON	STEEL	NI CHROME	BRONZE	AL BRONZE	ALUMINUM	BRASS

Z NUMBER	DETAIL	PART NO.	PATTERN NUMBER	PATT. LETTER

V-316 Disconnect all pipes and meters on Milling Cams for No. 37754 and move to from K-7 Left 410 to B-55-N-711C

N-711C Make all necessary repairs on Milling Cams for No. 37754

MAR 28 1930

3 to Left Hand

REASON

DATE	REQUESTED BY	OF DEPT.	LOCATION	FOR DEPT.	LOCATION OF JOB	SUPT. O. K.
3/27/30	Meyers T	410	T-5	410	K-7	

PLAINTIFF'S EXHIBIT NO. P-5

Ford Motor Company

SERIAL	ACCOUNT NO.	DEPT. CHG.	FACTORY WORK ORDER NO.	APPROVED
Nº 867317 867317	270	410	E-40938	Dc

ASSIGNED	CAST IRON	STEEL	NI CHROME	BRONZE	AL BRONZE	ALUMINUM	BRASS

Z-NUMBER	DETAIL	PART NO.	PATTERN NUMBER	PATT. LETTER

B.T. 38005

K-316
K-309
K-711-C

CC

Kellogg
A.Smith
C.Hill
Meyers
Myers.

Move Milling Cam Turning Lathe B.T. 38005 from K-7

Motor Mldr. (assigned to A-6280) to B-55 Fdry.

APR 10 1930

Overhaul for opr. #13: turn cams on A-425C Camshaft.

O. K. FILE

REASON Mgr. E. Myers.

DATE	REQUESTED BY	OF DEPT.	LOCATION	FOR DEPT.	LOCATION OF JOB	SUPT. O. K.
10-18-29	E. Hawkins	K-519-A	B-Bldg.	410	Motor Bldg	

PLAINTIFF'S EXHIBIT NO. P-6

SERIAL	Nº 14087 14087 R	ACCOUNT NO. 270	DEPT. CHG. 410	FACTORY WORK ORDER NO. R54299	APPROVE

ASSIGNED	CAST IRON	STEEL	NI CHROME	BRONZE	AL BRONZE	ALUMINUM	BRASS

Z-NUMBER	DETAIL	PART NO.	PATTERN NUMBER	PATT. LETTER

BT-37867

50

N-316
N-309
N-711-C
CC
Kellogg
A. Smith
S. Hill
Myers.

Move Melling Cam Turning Lathe BT-37867 from K-7 Motor Bldg. (assigned to A-6250) to B-58 Fdry.

Overhaul for opr. #13: Rough turn cams on A-6250 Camshaft.

APR 8 1930

REASON

DATE	REQUESTED BY	OF DEPT.	LOCATION	FOR DEPT.	LOCATION OF JOB
1-27-30	E. Merklotz	N-519-A	S-Bldg	410	Motor Bldg.

Ford Motor Company

PLAINTIFF'S EXHIBIT NO. P-7

APPROVED BY	SERIAL	Nº 44067	ACCOUNT NO. 270	DEPT. CHARGE 410	FACTORY WORK ORDER NO. E58333

THESE SPACES TO BE USED FOR ORDERING CASTINGS

ASSIGNED	NO. WANTED	KIND OF METAL	PATTERN NO.	DELIVER TO

NO. WANTED	Z OR S NUMBER	DETAIL	PATTERN	FORGING	S. P.
	B.T. 36451				

N-316 - Disconnect motor & pipes
Move to B-60 - Foundry Tool Room
N-711C

O.K. FILE

N-711C - Do all necessary repairs to put machine in first class shape

NOV 7 1928

REASON Machine worn and C.I. Bracket broken

DATE	REQUESTED BY	OF DEPT.	LOCATION	FOR DEPT.	LOCATION OF JOB	SUPT'S O. K.
9-5	Ackton (T)	410	J-7	410	J-7	

Ford Motor Company

PLAINTIFF'S EXHIBIT NO. P-8

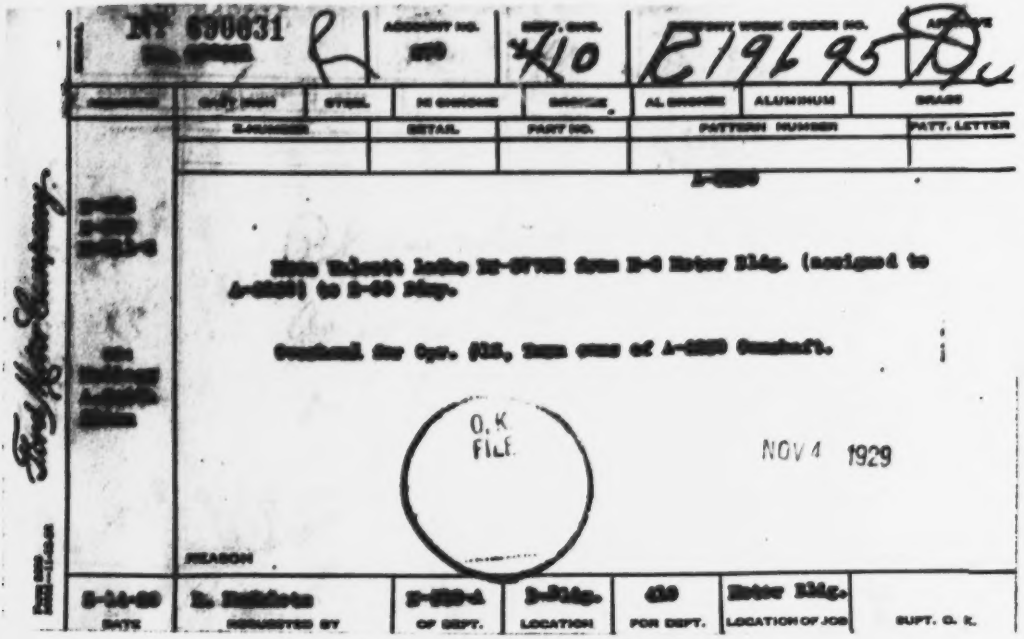

Nº 690631	ACCOUNT NO.	DEPT. CHG.	FACTORY WORK ORDER NO.	APPROVE
[illegible]	[illegible]	410	E19695	[illegible]

ASSIGNED	CAST IRON	STEEL	NI CHROME	BRONZE	AL BRONZE	ALUMINUM	BRASS

Z-NUMBER	DETAIL	PART NO.	PATTERN NUMBER	PATT. LETTER

[illegible]

[illegible] Walcott lathe [illegible] from [illegible] Motor Bldg. (assigned to [illegible]) to [illegible] Bldg.

Overhaul for Opr. [illegible], Turn cams of [illegible] Camshaft.

O.K. FILE

NOV 4 1929

REASON

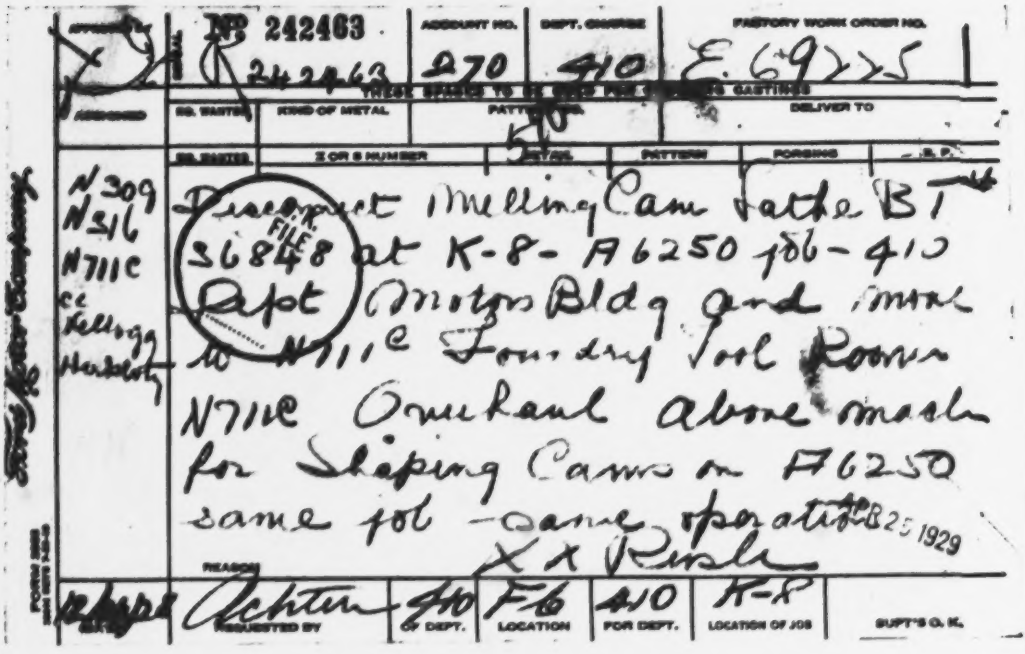

DATE	REQUESTED BY	OF DEPT.	LOCATION	FOR DEPT.	LOCATION OF JOB	SUPT. O. K.
[illegible]	[illegible]	[illegible]	[illegible]	410	Motor Bldg.	

Ford Motor Company

PLAINTIFF'S EXHIBIT NO. P-9

APPROVED BY	Nº 242463	ACCOUNT NO.	DEPT. CHARGE	FACTORY WORK ORDER NO.
[illegible]	242463	270	410	E.69225

THESE SPACES TO BE USED FOR [illegible] CASTINGS

ASSIGNED	NO. WANTED	KIND OF METAL	PATTERN NO.	DELIVER TO
			5	

NO. WANTED	Z OR S NUMBER	DETAIL	PATTERN	FORGING	S. P.
N309 N316 N711C cc Kellogg Harbloty					

O.K. FILE

Disconnect Milling Cam Lathe BT 36848 at K-8- A6250 job-410 Dept Motors Bldg and move to N711C Foundry Tool Room N711C Overhaul above mach for Shaping Cams on A6250 same job - same operation

APR 25 1929

X X Rusk

REASON

DATE	REQUESTED BY	OF DEPT.	LOCATION	FOR DEPT.	LOCATION OF JOB	SUPT'S O. K.
[illegible]	Achten	410	F6	410	K-8	

Ford Motor Company

PLAINTIFF'S EXHIBIT NO. P-10

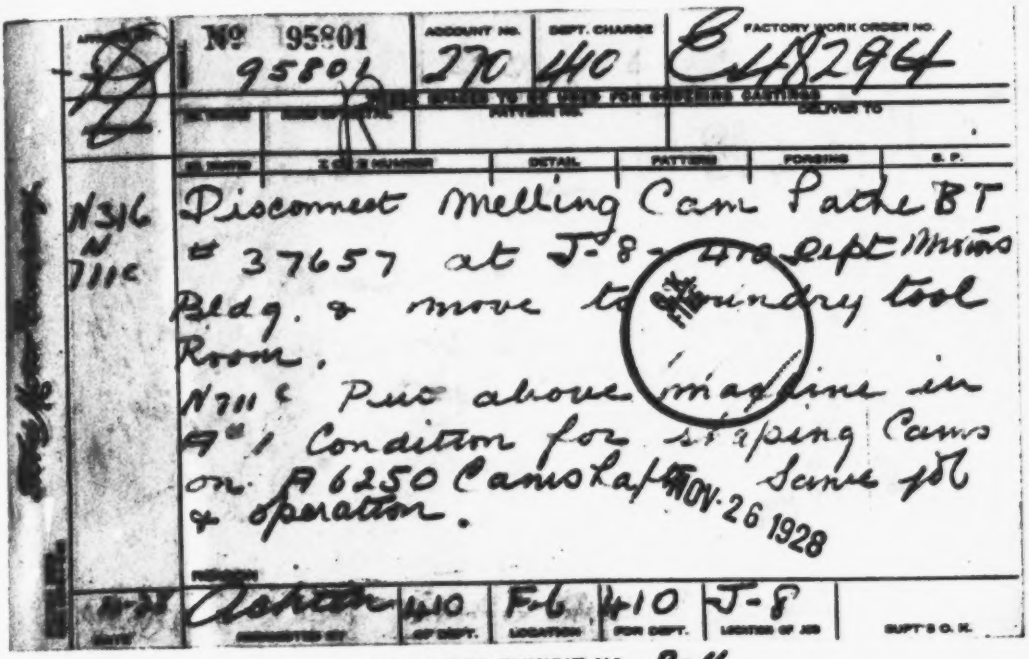

	Nº 95801 95801	ACCOUNT NO. 270	DEPT. CHARGE 410	FACTORY WORK ORDER NO. E48294

PRESS SPACES TO BE USED FOR ORDERING CASTINGS

		PATTERN NO.		DELIVER TO	

N316 N 711c	Disconnect Melling Cam Lathe BT # 37657 at J-8 - 410 Dept Motors Bldg. & move to Foundry tool Room. N711c Put above machine in A#1 Condition for shaping Cams on A6250 Camshaft. Same job & operation.				

NOV 26 1928

11-28	Ashton	410	F-6	410	J-8	
DATE	REQUESTED BY	OF DEPT.	LOCATION	FOR DEPT.	LOCATION OF JOB	SUPT'S O. K.

PLAINTIFF'S EXHIBIT NO. P-11

Nº 143878 143878	P	ACCOUNT NO. 270	DEPT. CHG. 410	FACTORY WORK ORDER NO. R70888		APPROVE
ASSIGNED	CAST IRON	STEEL	IN CHARGE	BRONZE	AL BRONZE	ALUMINUM	BRASS

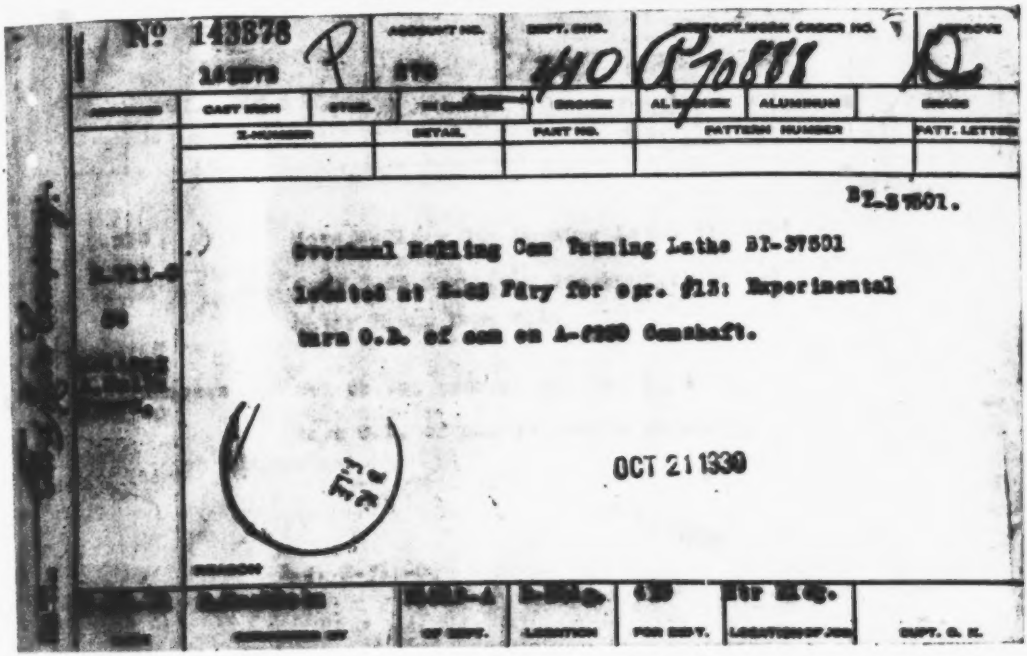

Z-NUMBER	DETAIL	PART NO.	PATTERN NUMBER	PATT. LETTER

BT-37501.

Overhaul Melling Cam Turning Lathe BT-37501 located at [illegible] Fdry for opr. #13: Experimental turn O.D. of cam on A-6250 Camshaft.

OCT 21 1930

[illegible]	[illegible]	[illegible]	[illegible]	[illegible]	[illegible]	
DATE	REQUESTED BY	OF DEPT.	LOCATION	FOR DEPT.	LOCATION OF JOB	SUPT. O. K.

PLAINTIFF'S EXHIBIT NO. P-12

Ford Motor Company

APPROVED BY	SERIAL	Nº 390989	ACCOUNT NO.	DEPT. CHARGE	FACTORY WORK ORDER NO.
			270	410	R-7818

THESE SPACES TO BE USED FOR ORDERING CASTINGS

ASSIGNED	NO. WANTED	KIND OF METAL	PATTERN NO.	DELIVER TO

NO. WANTED	Z OR S NUMBER	DETAIL	PATTERN	FORGING	S. P.
73K	[illegible] cam lathe			A6250 # 37501	

O.K. FILE

[illegible] + move to
1359 F.T. Room N711C.
N711C [illegible] + put in first class
condition for shaping cams
to be used on same operation
same job. Dept 410 Motor Bldg.

MAR 25 1929

REASON

DATE	REQUESTED BY	OF DEPT.	LOCATION	FOR DEPT.	LOCATION OF JOB	SUPT'S O. K.
1/22/29	H. Klann	410	F7	410	18	

FORM 2063

PLAINTIFF'S EXHIBIT NO. P-13

Ford Motor Company

APPROVED BY	SERIAL	Nº 184099	ACCOUNT NO.	DEPT. CHARGE	FACTORY WORK ORDER NO.
		184099	270	410	E66495

THESE SPACES TO BE USED FOR ORDERING CASTINGS

ASSIGNED	NO. WANTED	KIND OF METAL	PATTERN NO.	DELIVER TO

NO. WANTED	Z OR S NUMBER	DETAIL	PATTERN	FORGING	S. P.
N316	Disconnect Melling Cam Lathe BT# 36496				
N309	at K-7- 410 Dept motor Bldg + move				
N711C	to Foundry Tool Room.				

O.K. FILE

Make all necessary repairs to above
mach for shaping Cams on A6250
camshafts.

APR [illegible]

REASON Broken Bracket [illegible]

DATE	REQUESTED BY	OF DEPT.	LOCATION	FOR DEPT.	LOCATION OF JOB	SUPT'S O. K.
11/16/28	Ashton	410	F-6	410	[illegible]	

FORM 2063

PLAINTIFF'S EXHIBIT NO. P-14

FORM 464

PERMANENT INVENTORY OF MACHINE TOOLS

SCRAPPED

MANUFACTURERS NUMBER 18Z-3 FACTORY SERIAL NUMBER 10706

DESCRIPTION

Special machine for shaping 8 cams on Cam Shaft T-410 at one time as per B/P 18Z-3 complete, excepting details #365-366 & 367, sheet #92, also except motors.

SPECIAL EQUIPMENT

#Q
3/18/38

ALTERATIONS

THIS MACHINE OVERHAULED AT OUR PLANT 1-18-19

SCRAPPED

SCRAPPED
1-3-25

PURCHASED FROM
Arthur Colton Co.

MANUFACTURED BY
Arthur Colton Co.

F. O. B.
Our Plant or our Trap Car Ft. of 8th St.

INVOICE DATE

PRICE Material at cost. Labor $1.00 per Hr.

DATE RECEIVED 8/19/16

F'G'T & C'T'G $4389.13

COST OF BELTING ON MACHINE PROPER

SCRAPPED

FLOOR	BAY	SECTION	DATE	REMARKS	
		A2-37W	8/30/16	D-34387	J-12X4 6-12-24
			10/1/16	7-12-19 1-29-20	J-14X4 9-26-24
		B 813	10/20/16	5-7X4 5-30-20 5-5-22	1-7X4 11-13-24
			6-30-17	1-18-24	J 14X4 12-20-24
		Z-5-37	11-23-18	J 21X4 6-5-24	SCRAPPED 1-6-25

PLAINTIFF'S EXHIBIT NO. Q

1471

FORM 464

PERMANENT INVENTORY OF MACHINE TOOLS

MANUFACTURERS NUMBER No #

FACTORY SERIAL NUMBER 11628 —

DESCRIPTION

Special machine for shaping 8 cams on Cam Shaft T-410 at one time as per B/P 18Z-3 complete, excepting details #365-366 & 367, sheet #92, also except motors.

SPECIAL EQUIPMENT

#R
3/18/38

ALTERATIONS

THIS MACHINE OVERHAULED AT OUR PLANT 2-11-19

SCRAPPED
Fwd 976532
1-3-25

PURCHASED FROM
Arthur Colton Co.

MANUFACTURED BY
Arthur Colton Co. $4389.13

F. O. B.
Our Plant or our Trap Car Ft. of 8th St.

INVOICE DATE

PRICE Material at cost. Labor $1.00 per Hr.

DATE RECEIVED 10/20/16

FOTACTS

COST OF DELTING ON MACHINE PROPER

FLOOR	BAY	SECTION	DATE	REMARKS
		M.T.R.	10/23/16	B8x4 ~~D-34387~~ ~~1-30-19~~ J21x4 6-5-24
		B8x3	12-26-16	7-12-19 1-29-20 J-13x4 6-12-24
			10-8-17	B-7x4 - 8-30-20 10-6-20 J-14x4 8-19-24
			8-10-18	1-8-22 To be salvaged 1-6-25
		Z-5-37	11-23-18	~~1-18-24~~ SCRAPPED
		~~Q1-33~~	1-15-19	

PLAINTIFF'S EXHIBIT NO. R

1472

COPY BOUND VERTICALLY

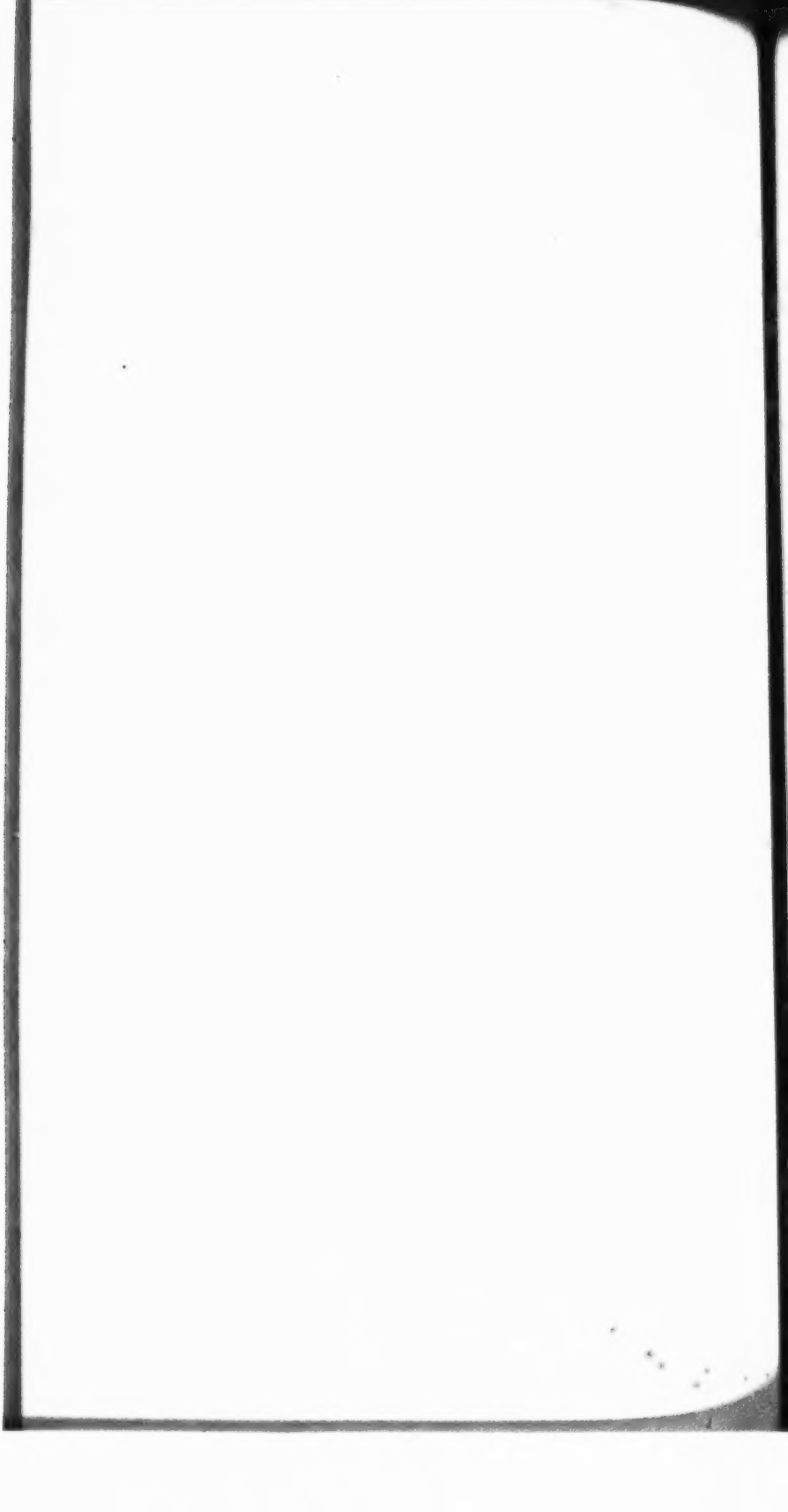

FORM 404

PERMANENT INVENTORY OF MACHINE TOOLS

MANUFACTURERS NUMBER 18Z-3 FACTORY SERIAL NUMBER 12205

DESCRIPTION

Special machine for shaping 8 cams on Cam Shaft T-410 at one time as per B/P 18Z-3 complete, excepting details #365-366 & 367, sheet #92, also except motors.

SPECIAL EQUIPMENT

OVERHAULED IN OUR PLANT 6/14/20.

#S JB 3/18/38

WORK ORDER ISSUED TO MAKE MOTOR DRIVE #1301-16 Date 1-3-25 HP 7½ 1150 RPM

ALTERATIONS

SOLD TO Woodmere Scrap T. Mc. Detroit Mich

SHIPPED TO Same

INV. NO P.618 DATE 8-24-26

SALE PRICE $12.50 Net Ton

DISPOSITION Sold as scrap

PURCHASED FROM Arthur Colton Co.

MANUFACTURED BY Arthur Colton Co.

F. O. B. Our Plant or our Trap Car Ft. of 8th St. 4359 13

INVOICE DATE PRICE Material at cost. Labor $1.00 per Hr.

DATE RECEIVED 12/1/16 FOTOCTS

COST OF BELTING ON MACHINE PROPER

FLOOR	BAY	SECTION	DATE	REMARKS	
		A2-36	12-11-16	D-54367	J 14X4 2-23-24
		75-13	11-20-18	B-7X4 - 1-18-24	Range 12-30-24
		B 8x4	7-12-19 1-20-20	J 13x4 6-5-24	
			8-7-20	8-19-24	
		B-7x4	8-30-20	9-26-24	
			10-6-20	B 7x4 11-12-24	

PLAINTIFF'S EXHIBIT NO. 5

1473

COPY BOUND VERTICALLY

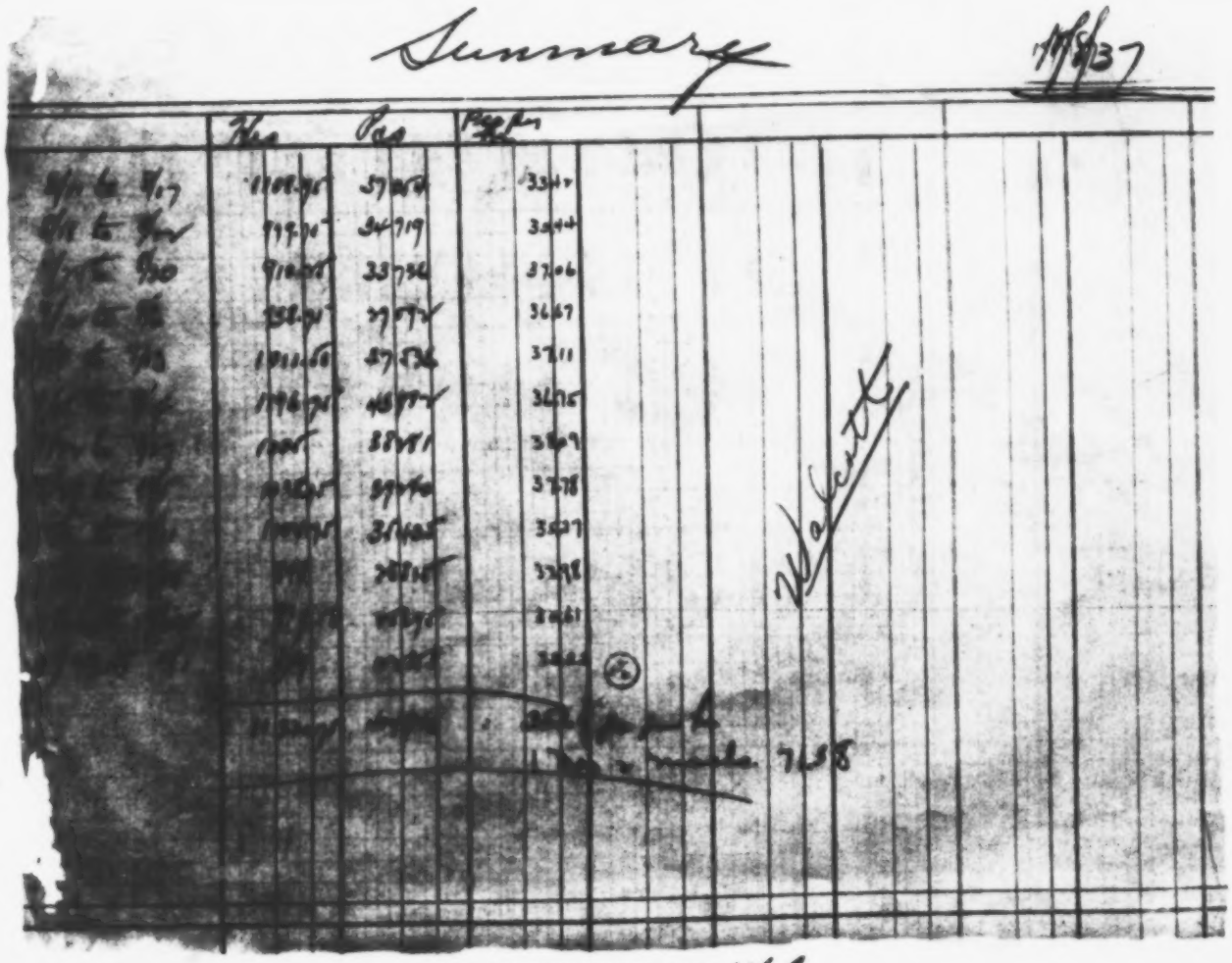

PLAINTIFF'S EXHIBIT NO. W-1

1474

COPY BOUND VERTICALLY

Mr A N Wibel

8-18-24

REPORT ON MILLING GAS ENGINE - WEEK OF AUGUST 11TH TO 17TH 1924

B. T. No.	No. Pieces	Hrs Run	Hours Lost Due to Mch Trouble	No Tools	No Stock	No Oper.	REMARKS
35472	0	0	120.				Setting up Machine
36386	3171	88.75	3.50		19.50	7.25	
36451	3035	84.50	16.75		11.50	7.25	
36496	2874	77.			41.	2.	
36552	2545	69.25	12.25		36.50	2.	
36592	2019	54.75	5.		52.	8.25	
36948	2096	56.75	15.	18.	29.	5.25	
36928	1300	35.	85.				Broken Tool Holder
37501	3721	103.75	5.		1.50	11.75	
37687	578	16	8		87.	9.	
37732	3425	99.75	11.		7.	2.25	
37754	305	7.75	76.25		24.	12.	Broken Tool Holder
37844	2132	62.50	8.		49.	.50	
37867	3502	96.50	11.		7.50	4.	
38005	3751	94.	3.50		18.50	4.	
38080	2500	66.	44.		10.		
Total	37,054	1108.75	422.25	18.	394.	65.50	
		5[illegible]	21.	.89	19.6	3.3	

Payne

PLAINTIFF'S EXHIBIT NO. W-2

Mr A M Wibel Engineering 8-25-24

REPORT ON MILLING [illegible] CHAFERS - WEEK OF AUGUST 19TH TO [illegible] 1924

PT No.	No. Pieces	Hrs. Run	Mch Trouble	Hours Lost Due to Tool Trbl	No Tools	No Stock	No Oper.	REMARKS
35473		0	120.					Setting up Machine
36286	640	16.75	99.25				4.	Tail Stock Trouble
36451	745	22.25	61.75			8.		Cam & Tool Holder - out of order
36496	3841	107.	2.			11.		
36552	4039	111.				9.		
36592	2213	65.				19.	28	
36948	1888	56.50	19.	3.	3.	27.50	11.	
36928	0	0	120.					Slide out of order
37501	2458	67.	44.			3.	6.	Tool Holder out of order
37557	3874	103.	16.				1.	Master Cam worn out
37732	3777	77.	30.			11.	12.	
37734	3807	102.50		.50		8.	9.	
37844	3396	70.50				34.	15.50	
37867	715	20-1/2	97.50				2	Repair Slides
38005	3720	83.50	22.			12.50	2	
38060	3601	77.25	29.75			9.	4	
Total	34,719	979.75	671.25	3.50	3.	188.	94.50	
		51.%	35.%			8.%	5.%	

Payne

PLAINTIFF'S EXHIBIT NO. W-3

Mr A M Wibel — Engineering — 9-11-34

REPORT ON SELLING CAM SHAPERS - WEEK OF AUGUST 26TH TO SEPT. 1934

MI No.	No. Pieces	Hrs. Run	Mch Trouble	Tool Trouble	No Tools	No Stock	No Oper.	REMARKS
35472	0	0.	112.					Setting Up
36286	2885	79.	29.	1.		2.	1.	Rep Tail Stock
36451	2970	82.	26.50			2.50	1.	" " " & Slide
36496	4155	111.					1.	
36582	2975	78.50	32.	.50			1.	Broken Drive Gear
36892	1650	37.25	64.25				10.50	Rep Tool Holder
36948	1333	36.25	61.25	14.50			8.	Rep Slide & change cam
36928	0	0.	112.					Rep. Slide & Tail Stock
37501	1210	32.50	70.50			9.		Rep. Slide, Cam & Drive Gear
37657	0	0.	112.					Rep. Slide & Tail Stock
37732	844	15.75	75.25		5.		16.	Overhauling Slides
37754	1230	31.	81.					" "
37844	3777	104.	.50	1.			5.50	
37867	3615	98.	12.			1.	1.	
38005	4012	108.				2.	2.	
38080	3500	97.	7.50				7.50	
Total	33,736	910.25	795.75	17.	5.	16.50	54.50	
%		51%	44%	1%		1%	3%	

A — H E PAYNE — ENGINEERING

PLAINTIFF'S EXHIBIT NO. W-9

Payne - Want to recap, all reports to date. Show eff. in %
W

Mr A M Wibel X Engineering 9-11-24

REPORT ON MELLING CAM SHAPERS - WEEK OF SEPT. 2ND TO 6TH 1924

BT No.	No. Pieces	Hrs. Run	Mch Trouble	Tool Trouble	No Tools	No Stock	No Oper.	REMARKS
35472	0	0.	96.					Setting Up
36386	3450	93.50	.50	1.			1.	
36451	3385	93.	2.				1.	
36496	1965	53.50	30.				12.50	Rep Bushing
36552	75	2.	94.					Rep Tool Holder
36592	1200	33.	39.				24.	" Master Cam & Clutch
36848	565	14.50	48.50		6.	3.	16.	Tools out of line
36928	685	19.	76.				1.	Tool Holder out of order
37501	580	17.50	76.50				2.	Rep Drive Gear
37657	2320	68.	26.				2.	
37732	1460	41.50	11.50	4.	23.		16.	Overhauling slides
37754	1786	48.50	46.50					
37844	2770	76.	9.				11.	
37867	1380	37.75	58.25					Overhauling slides
38005	2999	82.50	.50				13.	
38080	2452	58.50	25.50				5.	Tool Holder & Tail Stock Trouble
Total	27,092	738.75	639.75	5.	29.	3.	104.50	
%		49%	42%.		2%		7%	

A H E PAYNE ENGINEERING

PLAINTIFF'S EXHIBIT NO. W-5

Mr A M Wibel — Engineering — 9-16-24

REPORT ON MILLING CAM HEATERS - WEEK OF SEPT 9TH TO 13TH 1924

BT No.	No. Pieces	Hrs. Run	Mch. Trouble	Hours Lost Due to Tool Trouble	No Tools	No Stock	No Oper.	REMARKS
36472			128.					Not assembled
36386	2861	74.25	39.25			5.50	5.	Cam out of line
36451	3829	106.	.50			5.50	16.	
36490	1600	44.50	83.	.50				Slides & Tool Holder Out of order
36552	2712	73.50	39.				15.50	Setting up & Broken Key
36592	715	19.	77.				32.	Tool Holder out of order
36848	2330	61.50			39.		27.50	
36928			106.				22.	Tool Holder out of order
37501	2785	75.25	16.75			.50	35.50	Clutch out of order
37657	3643	97.75	14.25	1.			15.	Tail Stk out of order
37732	208	5.50	19.		64.		39.50	Master Cam Trouble
37754	3843	103.75	12.50	.50		.50	10.75	Tail Stock Trouble
37844	2627	71.	35.50			.50	21.	Tool Holder out of order
37867	1945	52.50	59.				16.50	Overhauling Slides
38005	4295	115.50		.50		1.	11.	
38080	4143	111.50	.50	.50			15.50	
Total	37,536	1011.50	650.25	3.	103.	13.50	282.75	
%		49.45	30.90	.14	5.03	.66	13.82	

A — H E PAYNE ENGINEERING

PLAINTIFF'S EXHIBIT NO. W-6

Mr A M Wibel — Engineering — 9-26-24

CAM SHAPER REPORT - WEEK OF SEPT 15th TO 24th, 1924

Pt No.	Pieces Made	Hours Run	Mach Trbl	Not Assem.	Tool Trbl	No Tools	No Stock	No Oper.	REMARKS
36472				144					
36386	1297	34.	52.50				35.50	21.	Cam Trouble
36451	1040	37.50	72.				6.	37.50	Steady Rest and Tail Stock Trouble
36496	2960	82.50	27.50				8.	29.	Tool Holder out of order
36552	1920	52.25	65.					28.75	Rep. Feed Gear
36892	4675	125.	7.					12.	Tool Holder Trouble
36848	3800	105.50	.50			6.		34.	
36926	3728	100.	19.					29.	Clutch out of order
37501	1975	53.25	25.					65.75	Cam worn out
37732			24.			16.		104.	Out of Time
37734	5076	141.50	1.		1.			.50	
37844	1719	45.75	69.50					22.75	Rep. Tail Stock
37857	1685	45.	41.				10.	48.	Drive Chain Broke
38005	4401	121.						22.	
38080	4407	122.50	4.		.50		2.	14.50	
37487	5299	143.			.50			.50	
Total	43982	1196.75	406.	144	2.	22.	86.50	476.25	
%									

A — H H PAYNE — ENGINEERING

PLAINTIFF'S EXHIBIT NO. W-7

Mr A M Wibel Engineering [illegible]

[illegible]

[illegible] No	Pieces Made	Hours Run	Mach Trbl	Not Assem	Tool Trbl	No Tools	No Stock	No Oper.	[illegible]
[illegible]				128.					
[illegible]			128.						Cam Worn
[illegible]	[illegible]	84.					44.		
[illegible]	4420	114.	13.					1.	
[illegible]	[illegible]	125.75	1.25					1.	
[illegible]	[illegible]	100.50	26.					2.50	New Slides
[illegible]	1796	48.50				29.	19.50	31.	
[illegible]	4489	125.50						1.50	
37501	405	10.50	64.				40.	13.50	Installing New Heads
37657	[illegible]	83.75	9.25				25.	12.	Tool Holder Trouble
37732	1100	26.50	37.50		2.	22.	16.	24.	Pin out of Feed Gear
37754	1105	29.	99.						
37844	[illegible]	102.50	.50				16.	9.	
37867	4043	106.50					13.	8.50	
[illegible]	[illegible]	38.	72.				13.	5.	Installing New Heads
[illegible]	[illegible]	10.	114.50				3.50		
Total	[illegible]	1005.	565.	128.	2.	51.	188.	110.50	
%									

PLAINTIFF'S EXHIBIT NO. W-8

Mr A M Wibel Engineering 18-10-24

CAM SHAPER REPORT - WEEK OF SEPT 29TH TO OCT 5TH 1924

RT No	Pieces Made	Hours Run	Mach Trbl	Not Assem	Tool Trbl	No Tools	No Stock	No Oper.	REMARKS
[illegible]				128.					
[illegible]			128.						Cam Trouble
[illegible]	[illegible]	89.50	5.				35.50		
[illegible]	[illegible]	96.50	17.				14.50		Tool Holder Trouble
[illegible]	[illegible]	102.	4.50				20.50		
[illegible]	4160	108.	15.		1.		4.		General Trouble
[illegible]	1755	46.50				8.	35.	38.50	
[illegible]	[illegible]	111.	12.50		.50		4.		Tool Holder Trouble
[illegible]	[illegible]	90.50	29.50					8.	Broken Chain
[illegible]	[illegible]	104.75	2.75				16.	2.50	
[illegible]	[illegible]	18.75	84.		5.	8.75	8.	6.	Overhauling Heads
[illegible]	[illegible]	84.75	41.25		1.			1.	Feed Gear Broken
[illegible]	[illegible]	91.50	35.50					1.	General Trouble
[illegible]	[illegible]	90.	17.				16.	5.	" "
[illegible]	55	2.	118.				8.		Installing New Heads
[illegible]			128.						Rep. Tool Holder
Total	[illegible]	1058.75	[illegible]	128.	5.50	16.75	161.50	62.	

E E PAYNE ENGINEERING

PLAINTIFF'S EXHIBIT NO. W-9

Mr A M Wibel Engineering 10-16-24

CAM SHAPER REPORT - WEEK OF OCTOBER 6TH TO 11TH 1924

Pf NO	Pieces Made	Hours Run	Mach Trbl	Not Assem	Tool Trbl	No Tools	No Stock	No Oper	REMARKS
35672				128.					
36386	1855	56.	27.			13.	32.		Head stock out of order, Clutch Trouble
36451	555	16.	104.					8.	Overhauling 8 heads
36496	4045	114.	9.				5.		
36552	3850	110.75	2.		2.	4.		9.25	
36592	3965	112.	7.				9.		
36848	3385	92.50	33.50		1.		1.		General Trouble
36928	4400	121.					7.		
37501	185	5.	107.					8.	Repairing Heads
37657	3460	100.	11.50				12.50	4.	Broken Tool Holder
37732	755	21.	96.		1.		10.		Preparing for shipment to Rouge
37754	360	11.	108.				1.	16.	Ditto
37844	2755	73.	29.				18.		General Trouble
37867	2785	75.50	14.50				18.	20.	Moving to Rouge
38005			128.						N-160 Gen Overhauling
38080	3080	89.	32.				7.		Slide out of order
Total	35435	1004.75	708.50	128.	4.	17.	120.50	65.24	

$

A H E PAYNE ENGINEERING

PLAINTIFF'S EXHIBIT NO. W-10

Mr A M Wibel Engineering 10-27-24

CAM SHAPER REPORT - WEEK OF OCTOBER 13TH TO 18TH

BT NO	Pieces Made	Hours Run	Mach Trbl	Not Assem	Tool Trbl	No Tools	No Stock	No Oper.	REMARKS
35472	1530	46.50	6.50	62.		1.	9.	3.	Shipped to River Rouge
36386	3105	96.	10.		3.	5.	3.	4.	
36451	765	20.50					.50	3.	
36496	3905	111.	10.				2.50		
36552	4295	122.	3.50				2.50		
36592	2240	63.50	56.					9.50	Clutch Trouble
36928	3180	94.	32.				.50	1.50	Slide out of order
37657	3630	114.50	.50			1.	8.50	3.50	Broken Tool Holder
37844	2510	72.50	27.				8.50	9.	
38005	1070	28.50					.50	3.	Shipped to River Rouge
38080	2585	79.	18.		2.	10.	4.	7.	Clutch Trouble
Total	28815	848.	163.50	62.	5.	17.	39.50	43.50	

H E PAYNE ENGINEERING

PLAINTIFF'S EXHIBIT NO. W-11

Mr A M Wibel Engineering 11-8-24

REPORT ON MILLING CAM SHAPERS - WEEK OF OCTOBER 20TH TO 25TH

ST No.	No. Pieces	Hrs. Run	Hours Lost Due To Mch. Trouble	Tool Trouble	No Tools	No Stock	No Oper.	REMARKS
35472	3605	103.50	16.		7.50			Clutch Trouble
36496	4220	123.50	1.50				3.	
36552	4165	121.	4.				3.	
36892	3930	111.50	13.	2.50			1.	Clutch Trouble
36848	440	14.		6.	41.		3.	Motor Disconnected
36928	3800	99.	28.				1.	Installing New Slides
37657	4035	215.50	6.50				5.	
37844	1800	51.50	2.50	1.		1.		Going to River Rouge
38080	----				54.		2.	" " "
Total	25695	839.50	71.50	9.50	102.50	1.	18.	

A H PAYNE ENGINEERING

PLAINTIFF'S EXHIBIT NO. W-12

Mr A M Wibel Engineering 9-16-24

REPORT ON MILLING CAM SHAPERS - WEEK OF OCTOBER 27TH TO NOV 1ST.

ST No.	No. Pieces	Hrs. Run	Mch. Trouble	Hours Lost Due to Tool Trouble	No Tools	No Stock	No Oper.	REMARKS
35472	4160	125.	16.50		.50	4.	[illegible]	Repair Chain
36496	4125	120.	18.50			5.50	[illegible]	Cam Trouble
36552	4435	120.	6.			5.50	6.50	Slide Trouble
36592	2895	84.50	30.			11.	10.50	
36848	----			112.				Motor Disconnected
36928	2735	77.	35.					Slides & Tail Stock out of order
37657	4505	124.50	9.50			4.	6.	New Master
Total	22955	649.	115.50	112.	.50	30.	23.	

A N PAYNE ENGINEERING

PLAINTIFF'S EXHIBIT NO. W-13

Mr A M Wibel Engineering 9-19-24

RECAP OF MELLING CAM SHAPERS on T-410.

N.T.	No of Pieces	Hours Run	Mch Trouble	Tool Trouble	No Tools	No Stock	No Oper.
35472	0	0	576.	0	0	0	0
36386	13012	352.25	171.50	2.	0	27.	18.25
36451	13964	387.75	127.50	0	0	27.50	25.25
36496	14415	393.	114.	.50	0	52.	15.50
36552	12446	2[illegible].25	177.25	.50	0	45.50	18.50
36592	7797	267.	185.25	0	0	71.	102.75
36648	8212	225.50	141.75	17.50	66.	59.50	65.75
36928	1985	54.	499.	0	0	0	23.
37501	10754	296.	212.75	0	0	14.	55.25
37657	10415	284.75	176.25	1.	0	87.	27.
37732	8434	239.50	136.75	[illegible]	2.	18.	85.75
37754	10973	291.50	216.25	1.		32.50	31.75
37844	13702	384.	53.	1.	0	83.50	32.50
37867	11057	305.25	237.75	[illegible]	0	8.50	27.
38005	17777	483.50	26.	.50	0	32.	32.
38080	15196	410.50	107.25	.50	0	19.	32.
Total	170139	4662.75	3158.25	[illegible].50	158.	577.	612.25
%		50.7	34.3	.3	1.7	6.3	6.7

about 6%

No Good

4662
1139
5800 ea.

3200

5800
3200
4000

577
612
1139

A H E PAYNE ENGINEERING

PLAINTIFF'S EXHIBIT NO. W-14

EXHIBIT X1.

FORD MOTOR COMPANY
PRODUCTIVE LABOR AND OVERHEAD
FOR DEPARTMENT T 410

For the period from June 1, 1925 to February 28, 1931.

Months	Productive Labor	Overhead
June to December, inclusive, 1925	*	*
January, 1926	$ 62,909.88	$ 84,008.13
February	59,306.94	68,945.28
March	69,146.55	84,292.23
April	*	*
May	*	*
June	48,696.46	69,397.49
July to October, inclusive	*	*
November	65,574.68	97,369.91
December	*	*
January, 1927	58,283.20	82,996.62
February	53,310.77	77,531.01
March	68,320.05	92,290.50
April	54,351.92	85,119.67
May	249,710.42	358,460.04
June, 1927 to February, 1928, inclusive	*	*
March, 1928	383,979.89	447,558.00
April	426,026.67	475,148.94
May	161,354.00	156,416.84
June	165,423.64	171,631.19
July	165,843.40	167,469.92
August	184,494.69	168,764.90
September	160,847.08	159,116.76
October	190,366.59	195,530.67
November	180,039.79	195,001.14
December	*	*
January, 1929	215,922.85	202,037.18
February	193,657.89	197,642.17
March	196,301.27	200,855.86
April	175,020.71	190,257.42
May	190,031.69	195,126.59
June	180,264.14	203,087.58
July	193,567.51	220,448.28
August	200,442.07	224,977.43
September	153,922.47	195,200.30
October	169,232.65	219,447.29
November	103,309.90	163,800.36
December	64,214.22	139,747.94

* Not available.

EXHIBIT X2.

FORD MOTOR COMPANY
PRODUCTIVE LABOR AND OVERHEAD
FOR DEPARTMENT T 410

For the period from June 1, 1925 to February 28, 1931.

(Continued)

Months	Productive Labor	Overhead
January, 1930	$ 87,939.83	$145,167.10
February	119,236.45	195,618.32
March	149,514.16	216,167.92
April	177,954.06	223,733.42
May	182,309.84	246,599.45
June	176,010.73	241,648.41
July	60,658.66	114,603.09
August	111,339.13	178,899.35
September	103,715.10	171,956.69
October	86,511.32	149,475.42
November	78,540.83	147,837.62
December	58,743.22	135,272.64
January, 1931	59,624.21	120,931.88
February	83,081.80	147,409.48

EXHIBIT X3.

FORD MOTOR COMPANY
PRODUCTIVE LABOR AND OVERHEAD FOR F 446
CAMSHAFT MACHINING

For the period from June 1, 1925 to March 31, 1928.

Months	Productive Labor	Overhead	Overhead Percentages	
Department 105:				
June to December, inclusive, 1925	*	*		
January, 1926	$105,857.33	$178,937.71	169.037	
February	138,974.51	234,512.23	168.745	
March	124,779.76	234,215.80	187.703	(Used 150 pct.)
April	*	*		
May				
June	98,673.30	193,146.33	195.743	
July to October, inclusive	*	*		
November	22,200.11	149,677.33	674.219	
December, 1926 to March, 1928, inclusive	*	*		
Departments 102, 105 and 106 combined:				
June, 1925 to December, 1926, inclusive	*	*		
January, 1927	133,935.24	324,142.77	242.01	
February	236,317.99	373,399.23	158.007	
Departments 102, 105, and 106 combined:				
March, 1927	335,789.35	447,867.90	133.378	
April	*	*		
May	207,504.98	398,269.68	191.933	
June, 1927 to March, 1928, inclusive	*	*		
Department 102:				
June, 1925 to October, 1927, inclusive	*	*		
November	232,425.83	399,546.41	171.903	
December, 1927 to February, 1928, inclusive	*	*		
March	103,137.11	218,493.79	211.85	(Used 176 pct.)

* Not available.

Form 464

Ford Motor Company

PERMANENT INVENTORY OF MACHINE TOOLS

MANUFACTURER'S NUMBER 111

FACTORY SERIAL NUMBER 76592

Overhauled at O
Plant. Dept 410
F.W.D. 66375 Date 1-4-29

Melling Cam Turning Lathe, with [illegible] equipment and tooled to turn [illegible] on T-410 Camshaft, guaranteed to [illegible] [illegible] hour and to be placed in our [illegible] to have hand operated chuck. [illegible] Master Camshaft to be supplied [illegible] us. Arranged for chain motor drive, you to supply chain [illegible] guard, we to supply motor and mount same [illegible]

Overhead Control Cams
Req 26372 3-27-28
Order B-59335 4-9-28
$ 240.00

For operating [illegible]

6 HP, 1150 RPM Westinghouse Motor, type [illegible] out pulley, slide [illegible] or starter. [illegible]

Motor	H. P.	Type	Frame	Voltage	Order

LOCATION

Building	Date	Building	Date
B 7 x 4	4-26-24	Rouge	11-7-24
		" K 7 Mtr Bldg	12-20-28
		~~H. Park AVAIL 1PT [illegible]~~	~~2-5-31~~
		TRACK 207	2-5-31

Purchased from

Manufactured by

F. O. B. | Reg. No. | F'G'T & C'T'G | WEIGHT

Rec'd 4-19-24 | Order No. | Price

Use

1/12

SEE OVER

1491

PLAINTIFF'S EXHIBIT NO. Y-1

W. O. ISSUED	DATE	BY DEPT.	W. O. ISSUED	DATE	BY DEPT.	W. O. ISSUED	DATE	BY DEPT.

SALVAGED By F.M.Co.
F.W.O. 563822 DATE 6-18-31
Disposition Single purpose. Replaced by 182505 Milling Machine

BRASS TAG RET'D BY SALVAGE DEPT.

1492

EXHIBIT Z-3.

SAVINGS EFFECTED BY FORD MOTOR COMPANY THROUGH USE OF MELLING CAM LATHES FOR ROUGH TURNING CAMS OF CAMSHAFTS T-410, A-6250 AND F-446 FROM JUNE 16, 1925 TO DATE USE OF THESE MACHINES WAS ABANDONED.

MINIMUM SAVINGS from June 16, 1925 to February 3, 1931, based upon production shown upon Exhibit D, pages 14, 15 and 16 of this report, per Exhibit A, Page 2 of this report	$895,793.95
ADDITIONAL SAVINGS based upon rejection of claims made by defendant, but not substantiated by records supplied:	
Item one of Exhibit H—Page 21 of this report	32,629.23
Item two of Exhibit H—Page 21 of this report	28,917.18
TOTAL	$957,340.36

PLAINTIFF'S EXHIBIT A.

Cost of Machining or Grinding Cams upon Ford Camshafts with Melling Cam Lathes and with Other Available Equipment, and Minimum Saving by Ford Motor Company through Use of Melling Cam Lathes from June 16, 1925 to February 3, 1931.

Based on Production Per Hour as Shown by Exhibit C, Pages 10 to 13 of this report.

	Production*	Cost per Shaft		Total Cost		Saving through Use of Melling Cam Lathes
		Ford Cam Shapers	Melling Cam Lathes	Ford Cam Shapers	Melling Cam Lathes	
Model T—T-410:						
June 16 to December 31, 1925	1,093,205	$ .031314	$ .020871	$ 34,232.62	$ 22,816.29	$ 11,416.33
1926	1,699,205	.039292	.026189	66,765.17	44,500.48	22,264.69
1927	506,086	.045418	.030272	22,985.41	15,320.24	7,665.17
1928	120,448	.033864	.022570	4,078.85	2,718.51	1,360.34
January 1 to 15, 1929	1,222	.032914	.021937	40.22	26.81	13.41
Totals, T-410	3,420,166			128,102.27	85,382.33	42,719.94
		Landis Grinders	Melling Cam Lathes	Landis Grinders	Melling Cam Lathes	
Model A—A-6250:						
November and December, 1927	9,287	.232398	.033506	2,158.28	311.17	1,847.11
1928	843,456	.180847	.026074	152,536.49	21,992.27	130,544.22
1929	1,961,973	.202608	.029212	397,511.43	57,313.16	340,198.27
1930	1,370,417	.258942	.037334	354,858.52	51,163.15	303,695.37
January 1 to February 3, 1931	37,866	.294745	.042495	11,160.81	1,609.12	9,551.69
Totals, A-6250	4,222,999			918,225.53	132,388.87	785,836.66
		Landis Grinders	Melling Cam Lathes	Landis Grinders	Melling Cam Lathes	
Tractor—F-446:						
June 16, to December 31, 1925	59,973	.278201	.055641	16,684.55	3,336.96	13,347.59
1926	99,111	.317488	.063498	31,466.55	6,293.35	25,173.20
1927	100,705	.309938	.061987	31,212.31	6,242.40	24,969.91
January, February, March, 1928	15,875	.295013	.059003	4,683.33	936.68	3,746.65
Totals, F-446	275,664			84,046.74	16,809.39	67,237.35
GRAND TOTALS—ALL TYPES ...	7,918,829			1,130,374.54	234,580.59	895,793.95

* See Plaintiff's Exhibit D, Pp. 14 to 16 of this report.

Note: See Exhibit B for unit costs of shafts—P. 5 of this report.

PLAINTIFF'S EXHIBIT A-1.

Productive Labor Cost of Machining or Grinding Cams upon Ford Camshafts with Melling Cam Lathes and with Other Available Equipment, and Minimum Labor Saving by Ford Motor Company through Use of Melling Cam Lathes from June 16, 1925 to February 3, 1931.

Based on Production per Hour as Shown by Exhibit C, Pages 10 to 13 of this Report.

	Production*	Productive Labor Cost per Shaft		Total Productive Labor Cost		Productive Labor Savings through Use of Melling Cam Lathes
		Ford Cam Shapers	Melling Cam Lathes	Ford Cam Shapers	Melling Cam Lathes	
Model T—T-410:						
June 16 to December 31, 1925	1,093,205	$ .016286	$ .010855	$ 17,803.94	$ 11,866.74	$ 5,937.20
1926	1,699,205	.016922	.011279	28,753.95	19,165.33	9,588.62
1927	506,086	.018622	.012412	9,424.33	6,281.54	3,142.79
1928	120,448	.016450	.010964	1,981.37	1,320.59	660.78
January 1 to 15, 1929	1,222	.017004	.011333	20.78	13.85	6.93
Totals, T-410	3,420,166			57,984.37	38,648.05	19,336.32
		Landis Grinders	Melling Cam Lathes	Landis Grinders	Melling Cam Lathes	
Model A—A-6250:						
November and December, 1927	9,287	.095286	.013738	884.92	127.58	757.34
1928	843,456	.087852	.012666	74,099.30	10,683.21	63,416.09
1929	1,961,973	.093992	.013552	184,409.77	26,588.66	157,821.11
1930	1,370,417	.101299	.014605	138,821.87	20,014.94	118,806.93
January 1 to February 3, 1931	37,866	.102328	.014753	3,874.75	558.64	3,316.11
Totals, A-6250	4,222,999			402,090.61	57,973.03	344,117.58
		Landis Grinders	Melling Cam Lathes	Landis Grinders	Melling Cam Lathes	
Tractor—F-446:						
June 16 to December 31, 1925	59,973	.102013	.020403	6,118.03	1,223.63	4,894.40
1926	99,111	.105150	.021030	10,421.52	2,084.30	8,337.22
1927	100,705	.114975	.022995	11,578.56	2,315.71	9,262.85
January, February, March, 1928	15,875	.106888	.021378	1,696.85	339.38	1,357.47
Totals—F-446	275,664			29,814.96	5,963.02	23,851.94
GRAND TOTALS, ALL TYPES	7,918,829			489,889.94	102,584.10	387,305.84

* See Plaintiff's Exhibit D, Pp. 14 to 16 of this report.

Note: See Exhibit B for unit costs of shafts—P. 5 of this report.

PLAINTIFF'S EXHIBIT A-2.

Burden Cost of Machining or Grinding Cams upon Ford Camshafts with Melling Cam Lathes and with Other Available Equipment, and Minimum Burden Saving by Ford Motor Company through Use of Melling Cam Lathes from June 16, 1925 to February 3, 1931.

Based on Production per Hour as Shown by Exhibit C—Pages 10 to 13 of this Report.

	Production*	Burden Cost Per Shaft		Total Burden Cost		Burden Saving through Use of Melling Cam Lathes
		Ford Cam Shapers	Melling Cam Lathes	Ford Cam Shapers	Melling Cam Lathes	
Model T—T-410:						
June 16 to December 31, 1925	1,093,205	$ .015028	$ .010016	$ 16,428.68	$ 10,949.55	$ 5,479.13
1926	1,699,205	.022370	.014910	38,011.22	25,335.15	12,676.07
1927	506,086	.026796	.017860	13,561.08	9,038.70	4,522.38
1928	120,448	.017414	.011606	2,097.48	1,397.92	699.56
January 1 to 15, 1929	1,222	.015910	.010604	19.44	12.96	6.48
Totals, T-410	3,420,166			70,117.90	46,734.28	23,383.62
		Landis Grinders	Melling Cam Lathes	Landis Grinders	Melling Cam Lathes	
Model A—A-6250:						
November and December, 1927	9,287	.137112	.019768	1,273.36	183.59	1,089.77
1928	843,456	.092995	.013408	78,437.19	11,309.06	67,128.13
1929	1,961,973	.108616	.015660	213,101.66	30,724.50	182,377.16
1930	1,370,417	.157643	.022729	216,036.65	31,148.21	184,888.44
January 1 to February 3, 1931	37,866	.192417	.027742	7,286.06	1,050.48	6,235.58
Totals, A-6250	4,222,999			516,134.92	74,415.84	441,719.08
		Landis Grinders	Melling Cam Lathes	Landis Grinders	Melling Cam Lathes	
Tractor—F-446:						
June 16 to December 31, 1925	59,973	.176188	.035238	10,566.52	2,113.33	8,453.19
1926	99,111	.212338	.042468	21,045.03	4,209.05	16,835.98
1927	100,705	.194963	.038992	19,633.75	3,926.69	15,707.06
January, February, March, 1928	15,875	.188125	.037625	2,986.48	597.30	2,389.18
Totals, F-446	275,664			54,231.78	10,846.37	43,385.41
GRAND TOTALS, ALL TYPES	7,918,829			640,484.60	131,996.49	508,488.11

* See Plaintiff's Exhibit D,—Pp. 14 to 16, of this report.
Note—See Exhibit B for unit costs of shafts—P. 5 of this report.

COPY BOUND VERTICALLY

(Exhibit Z-3, Page 6)

PLAINTIFF'S EXHIBIT B-1.

DETERMINATION OF BURDEN RATIO TO PRODUCTIVE LABOR.

On June 1, 1938, at cross examination, defendant presented three sheets showing total productive labor and total overhead as follows: Pltfs. Exs. — X-1 — X-2 — X-3 —

For Department 410:

5 Months of 1926
5 " " 1927
9 " " 1928
12 " " 1929
12 " " 1930
3 " " 1931

For Department 105 or for Departments 102, 105 and 106 combined:

5 Months of 1926
5 " " 1927
1 " " 1928

The data thus supplied has been used, as shown below, for periods subsequent to December 31, 1925. For the period beginning June 15, 1925 and ended December 31, 1925, the data has been obtained from cost summary cards furnished by defendant at earlier dates:

Department 410:

Months	Production	Unit Costs: Labor	Unit Costs: Burden	Total Amounts: Labor	Total Amounts: Burden
From Cost Summary Cards:					
June 16 to 30, 1925 (½ of June)	100,575	.3066	.2894	30,836.30	29,106.40
July "	172,650	.2960	.3271	51,104.40	56,473.82
August "	92,700	.3235	.2955	29,988.45	27,392.85
September "	119,500	.3106	.2837	37,116.70	33,902.15
October "	222,950	.3195	.2793	71,232.53	62,269.93
November "	212,950	.3084	.2570	65,673.78	54,728.15
Totals	921,325			285,952.16	263,873.30
Weighted average burden percentage (Used for 1925)					92.27

	Productive Labor	Overhead	Burden Percentage
From Data Supplied June 1, 1938 by Defendant (Exs. X-1, X-2 and X-3):			
January 1926	62,909.88	84,008.13	133.54
February "	59,306.94	68,945.28	116.25
March "	69,146.55	84,292.23	121.90
June "	48,696.46	69,397.49	142.51
November "	65,574.68	97,369.91	148.49
Totals, and average percentage (Used for 1926)	305,634.51	404,013.04	132.19
January 1927	58,283.20	82,996.62	142.40
February "	53,310.77	77,531.01	145.43
March "	68,320.05	92,290.50	135.09
April "	54,351.92	85,119.67	156.61
May "	249,710.42	358,460.04	143.55
Totals, and average percentage (Used for 1927)	483,976.36	696,397.84	143.89

(Exhibit Z-3, Page 7)

PLAINTIFF'S EXHIBIT B-1.

DETERMINATION OF BURDEN RATIO TO PRODUCTIVE LABOR.

Department 410 (continued)

Months		Productive Labor	Overhead	Burden Percentage
March	1928	383,979.89	447,558.00	116.56
April	"	426,026.67	475,148.94	111.53
May	"	161,354.00	156,416.84	96.94
June	"	165,423.64	171,631.19	103.75
July	"	165,843.40	167,469.92	100.98
August	"	184,494.69	168,764.90	91.47
September	"	160,847.08	159,116.76	98.92
October	"	190,366.59	195,530.67	102.71
November	"	180,039.79	195,001.14	108.31
Totals, and average percentage (Used for 1928)		2,018,375.75	2,136,638.36	105.86
January	1929	215,922.85	202,037.18	93.57
February	"	193,657.89	197,642.17	102.06
March	"	196,301.27	200,855.86	102.32
April	"	175,020.71	190,257.42	108.71
May	"	190,031.69	195,126.59	102.68
June	"	180,264.14	203,087.58	112.66
July	"	193,567.51	220,448.28	113.89
August	"	200,442.07	224,977.43	112.24
September	"	153,922.47	195,200.30	126.82
October	"	169,232.65	219,447.29	129.67
November	"	103,309.90	163,800.36	158.55
December	"	64,214.22	139,747.94	217.63
Totals, and average percentage (Used for 1929)		2,035,887.37	2,352,628.40	115.56
January	1930	87,939.83	145,167.10	165.07
February	"	119,236.45	195,618.32	164.06
March	"	149,514.16	216,167.92	144.58
April	"	177,954.06	223,733.42	125.72
May	"	182,309.84	246,599.45	135.26
June	"	176,010.73	241,648.41	137.29
July	"	60,658.66	114,603.09	188.93
August	"	111,339.13	178,899.35	160.68
September	"	103,715.10	171,956.69	165.80
October	"	86,511.32	149,475.42	172.78
November	"	78,540.83	147,837.62	188.23
December	"	58,743.22	135,272.64	230.28
Totals, and average percentage (Used for 1930)		1,392,473.33	2,166,979.43	155.62
January	1931	59,624.21	120,931.88	202.82
February	"	83,081.80	147,409.48	177.43
Totals, and average percentage (Used for 1931)		142,706.01	268,341.36	188.04

(Exhibit Z-3, Page 8)

PLAINTIFF'S EXHIBIT B-1.

DETERMINATION OF BURDEN RATIO TO PRODUCTIVE LABOR.

Department 105, or 102, 105 and 106 combined:

	Production	Unit Costs		Total Amounts	
		Labor	Burden	Labor	Burden
From Cost Summary Cards:					
June 16 to 30, 1925 (½ of June)	5,242	.8006	1.2520	4,196.74	6,562.99
July "	9,681	.8140	1.4303	7,880.33	13,846.74
August "	9,245	.7525	1.2479	6,956.86	11,536.84
September "	8,745	.7356	1.2410	6,432.82	10,852.55
October "	9,363	.7486	1.2642	7,009.14	11,836.71
November "	8,825	.6757	1.3316	5,963.05	11,751.37
Totals	51,101			38,438.94	66,387.20
Weighted average burden percentage (Used for 1925)					172.71

	Productive Labor	Overhead	Burden Percentage
From data supplied June 1, 1938 by defendant (Exs. X-1, X-2 and X-3):			
January 1926	105,857.33	178,937.71	169.04
February "	138,974.51	234,512.23	168.74
March "	124,779.76	234,215.80	187.70
June "	98,673.30	193,146.33	195.74
November "	22,200.11	149,677.33	674.22
Totals, and average percentage (Used for 1926)	490,485.01	990,489.40	201.94
January 1927	133,935.24	324,142.77	242.01
February "	236,317.99	373,399.23	158.01
March "	335,789.35	447,867.90	133.38
May "	207,504.98	398,269.68	191.93
November "	232,425.83	399,546.41	171.90
Totals, and average percentage (Used for 1927)	1,145,973.39	1,943,225.99	169.57
March 1928	103,137.11	218,493.79	211.85
Not used. Instead have accepted the suggested percentage			176.00

PLAINTIFF'S EXHIBIT C.

Production Per Hour by Various Types of Machines of Each Type of Camshaft, as Used in this Report.

T-410 Shaft.

By Cam Shaper: 25 per machine hour, 50 per man hour.

Based on production admitted by defendant's witnesses (pp. 205, 212, 222 of Printed Record of Appeal). Same production per hour as used by defendant in its accounting.

By Melling Cam Lathe: —37½ per machine hour, 75 per man hour.

Based on production admitted by defendant's witnesses (pp. 212-223 of Printed Record of Appeal). Supported by operation sheet of 10-8-24. Made at Highland Park. (Defendant's Exhibit 14). Modified by testimony of Mr. Schmidt, who was in charge of maintenance of Department 410 at Highland Park and Rouge. On page 1016 of the typewritten record of the hearing beginning January 16, 1939, Schmidt testified that the Melling lathes came in March, 1924; that slides were changed from cast iron to steel and that many other changes were made in the machines; that it was five or six months after the machines were received before they started to get anywhere near the production they ought to get; that after they made changes in the machines the production kept increasing and that this increase continued after the lathes were moved to the Rouge plant.

This operation sheet showed .86 of a minute for turning the cams, which is equivalent to about 35 per hour. The increase from 35 per hour to 37½ per hour, supported as it is by Mr. Wibel's sheet (Exhibit 247) is, we believe, exceedingly conservative.

A-6250 Shaft.

By Landis Grinders: —9.4297 per machine and man hour.

Calculated upon page 13 of this report. In this calculation, non-grinding time within the operation cycle is obtained from the White Motor Company's motion time study (Plaintiff's Exhibit A a). Unloading and loading time, as shown by this time study, has been eliminated from the non-grinding time because of the use of conveyors by defendant and consequent probable faster handling. Only the non-grinding time necessary because cams were ground one at a time, is retained. The remaining, or actual grinding time, is calculated upon the basis of the relative periphery of the cams upon A-6250 and F-446 shafts. Defendant's Exhibit 12 showed a production of eight F-446 shafts per hour and this production is the basis used for the calculation of the actual grinding time.

By Melling Cam Lathe: 32.711 Per Mach. Hour. 65.422 per Man Hour.

No time study covering the turning of the cams upon this shaft on the Melling lathes during the infringing period, is available, excepting Defendant's Exhibit 16, made at the very beginning of the production of the A-6250 shaft, and disregarded, for this reason, in defendant's accounting. A different type of operation sheet (Exhibit 214) prepared for Autostroy, has been presented by defendant, but this is clearly not an exact copy of a time study, because the production thereon is shown in even numbers per hour. At best, it is an approximation and time study speed showing anything between 30 and 35 per hour were probably changed to the nearest "safe" figure,—in this case 30. This sheet was prepared for use in Russia under the supervision of an employee of defendant, and presumably to indicate production which might be attained by workmen of a nation relatively inexperienced in mechanical operations or mass production. It would naturally state expected production conservatively. It cannot, therefore, be accepted as definitely and accurately proving production of defendant.

In the absence of an actual record, production has been calculated (See Page 13 of this report). In view of the evidence presented at the hearing beginning January 16, 1939, the use of non-turning time within an operation, as shown by the White Motor Company's time study of the Melling lathe, has been eliminated,—this because loading and unloading time has been shown by evidence at the hearing beginning January 16, 1939 to be materially less at the defendant's plant than at the White Motor Company's plant, and, unlike the grinding operation, in which each cam is separately ground, the non-turning time, other than loading and unloading, amounts to so little as to be a negligible factor in the determination of production per hour.

Evidence at the hearing beginning January 16, 1939 shows that the shaft revolution on Melling lathes is based upon motor revolutions per minute and on gearing which cannot be changed by operators and which was not changed. Therefore, theoretically, the production per hour of A-6250 shafts should be the same as that of T-410 shafts. However, evidence at this hearing indicated that even with shunt wound motors a heavier and longer cut would slightly reduce the motor speed. As the periphery of the A-6250 cams is greater than that of the T-410 cams and as the former are produced from 40 carbon steel as compared with 35 carbon steel for the latter, the production of the A-6250 shafts would have been slightly lower than the production of the T-410 shafts.

In recognition of this fact, production of the A-6250 shaft has been reduced from that of the T-410 shaft (37.5 per hour) in proportion to the relative area of the cams upon the two shafts. The reduction in speed, so determined, should be ample to give effect to the slight reduction in motor speed and to the slightly harder steel.

F-446 Shaft.

By Landis Grinders: Based on production of 8 shafts per machine and man hour, from Defendant's Exhibit 12.

By Melling Cam Lathes: 20 Per Machine and Man Hour.

Mr. Herklotz testified (page 256 of printed record of appeal) that production was 25 per machine hour, 50 per man hour. However, Mr. Worley (page 1872 of the typewritten record of the hearing beginning January 16, 1939) stated that the recollection of various men in the plant of the production of these cams, ranged all the way from 15 to 20 per Hour and some even said 25. A calculation based on 37.5 per hour of the T-410 shafts and recognizing the greater area of the F-446 shaft, shows 20.2389 per hour. (37.5 divided by 1.85287) for the F-446 shaft.

Defendant's Exhibit 215, an operation sheet prepared from an English time study, is not conclusive for the reason that there is no information as to the motor speed, or as to the handling methods in the English plant, and for the further reason that it is generally recognized that English workmen's output is much lower than that of American workmen. Also, English production of motor cars and tractors has not been in sufficient quantities to necessitate the mass production methods used in the United States.

In view of the above, it is believed that 20 per machine hour is the most reasonable estimate of production obtainable for the F-446 shaft.

(Exhibit Z-3, Page 14)

PLAINTIFF'S EXHIBIT D.

Production of Camshafts.

For the Period from June 16, 1925 to February 3, 1931.

Month		Model T T-410	Model A A-6250	Tractor F-446
June 16 to 30,	1925	100,575 a		5,242 a*
July	"	172,650 a		9,681 a*
August	"	92,700 a		9,245 a*
September	"	119,500 a		8,745 a*
October	"	222,950 a		9,363 a*
November	"	212,950 a		8,825 a*
December	"	171,880 b		8,872 b
Totals, June 16 to Dec. 31, 1925		1,093,205		59,973
January	1926	157,400 a		11,995 a*
February	"	154,000 a		12,195 a*
March	"	178,200 a		15,092 a*
April	"	170,375 b		10,124 b
May	"	155,139 b		8,823 b
June	"	149,069 b		9,645 a*
July	"	141,877 b		6,554 b
August	"	151,676 b		6,766 b
September	"	141,814 b		6,552 b
October	"	145,830 b		4,914 b
November	"	110,418 a		4,830 a*
December	"	43,407 b		1,621 b
Totals,	1926	1,699,205		99,111
January	1927	83,909 b		4,636 b
February	"	68,810 b		7,932 b
March	"	93,781 b		13,510 a*
April	"	80,555 b		9,704 b
May	"	83,520 b		6,944 b
June	"	13,109 b		7,398 b
July	"	12,711 b		6,531 b
August	"	14,837 b		9,977 b
September	"	18,703 b		9,737 b
October	"	16,625 b		9,606 b
November	"	12,285 c	2,553 c	10,380 c
December	"	7,241 c	6,734 c	5,250 c
Totals,	1927	506,086	9,287	100,705
January	1928	9,191 c	13,509 c	7,795 c
February	"	7,844 c	19,512 c	5,360 c
March	"	8,041 d	32,295 d	2,720 a*
April	"	8,435 c	44,503 c	
May	"	12,508 c	55,306 c	
June	"	14,878 c	67,866 c	
July	"	13,712 c	69,537 c	
August	"	13,491 c	96,098 c	
September	"	11,760 c	89,353 c	
October	"	9,445 c	117,348 c	
November	"	5,444 c	118,145 c	
December	"	5,699 c	119,984 c	
Totals,	1928	120,448	843,456	15,875

PLAINTIFF'S EXHIBIT D.

Production of Camshafts.

For the Period from June 16, 1925 to February 3, 1931.

Month		Model T T-410	Model A A-6250	Tractor F-446
January	1929	1,222 (e)	165,184 (e)	
February	"		160,960 (e)	
March	"		175,960 (e)	
April	"		180,249 (e)	
May	"		194,724 (e)	
June	"		186,277 (e)	
July	"		198,713 (e)	
August	"		198,044 (e)	
September	"		154,561 (e)	
October	"		174,545 (e)	
November	"		109,155 (e)	
December	"		63,601 (e)	
Totals,	1929	1,222	1,961,973	
January	1930		90,529 (e)	
February	"		114,714 (e)	
March	"		156,386 (e)	
April	"		192,275 (e)	
May	"		186,961 (e)	
June	"		169,489 (e)	
July	"		56,702 (e)	
August	"		103,200 (e)	
September	"		94,616 (e)	
October	"		79,907 (e)	
November	"		73,022 (e)	
December	"		52,616 (e)	
Totals,	1930		1,370,417	
January,	1931		32,700 (e)	
February	"		5,166 (e)	
Totals	1931		37,866	
Grand Totals	.....	3,420,166	4,222,999	275,664

a. Quantities obtained from cost summary cards, Form 3566.

b. Quantities arrived at by adding motors produced and camshaft service sales.

c. Quantities obtained from minute cost summaries, Form 2202B.

d. Quantities obtained from Productive Labor Reports, Form 3567.

e. Quantities obtained from minute cost summaries, Form 2202B and prorated between camshafts produced on Melling cam lathes and Ford Cam mills.

Note: All of the above quantities and notes (excepting for those marked "a") are taken from Defendant's Exhibit No. 4 Amended. Those marked "a*" are taken from cost summary cards discovered and supplied subsequent to preparation of Defendant's amended accounting and have been accepted in Defendant's accounting presented at hearing beginning January 16, 1939. These corrections, covering 13 months, considerably increase the production shown by Defendant for each month corrected, the total additions totaling more than 21 percent of the production previously reported for the months corrected.

Quantities obtained by method "b" do not recognize variations in inventories and are therefore estimates.

Quantities obtained by method "c" are likewise estimates, being the balance of production after assigning to Pioch machines production obtained by multiplying *total* hours operated by hourly production of these machines as shown by a time study dated July 1 of the following year.

No separate record was kept, or at least none was presented, of the respective production by Melling and Pioch machines during the period when both types were available.

PLAINTIFF'S EXHIBIT E.

Tabulation of Cost Summary Cards.

Cost Summary Cards			Production	Cost per Camshaft		
				Labor	Burden	Total
T-410:						
January	1923	Ex. F	146,400	.3269	.3171	.6440
February	"	" "	158,100	.3014	.2924	.5938
March	"	" "	184,100	.2902	.2467	.5369
April	"	" "	178,450	.2997	.2398	.5395
May	"	" "	188,150	.3023	.2267	.5290
June	"	" "	185,000	.3162	.2055	.5217
July	"	" F-1	180,750	.3135	.2195	.5330
August	"	" "	191,450	.3220	.2737	.5957
September	"	" "	168,900	.3485	.3137	.6622
October	"	" "	193,500	.3393	.3393	.6786
November	"	" "	180,900	.3280	.3280	.6560
January	1924	" F-2	226,850	.3299	.3299	.6598
February	"	" "	216,450	.3201	.3201	.6402
March	"	" "	218,250	.3180	.3085	.6265
April	"	" "	208,050	.3330	.3230	.6560
May	"	" "	176,800	.3337	.3237	.6574
June	"	" "	142,700	.3239	.3239	.6478
July	"	" F-3	142,450	.3163	.3479	.6642
August	"	" "	148,900	.3088	.3551	.6639
September	"	" "	155,050	.2974	.3331	.6305
October	"	" "	152,950	.3295	.3625	.6920
November	"	" "	107,050	.3300	.3630	.6930
April	1925	" F-4	197,000	.3002	.3302	.6304
May	"	" "	187,240	.2995	.2646	.5641
June	"	" "	201,150	.3066	.2894	.5960
July	"	" "	172,650	.2960	.3271	.6231
August	"	" "	92,700	.3235	.2955	.6190
September	"	" "	119,500	.3106	.2837	.5943
October	"	" F-5	222,950	.3195	.2793	.5988
November	"	" "	212,950	.3084	.2570	.5654
January	1926	" F-6	157,400	.3051	.3356	.6407
February	"	" "	154,000	.2934	.3521	.6455
March	"	" "	178,200	.3011	.3613	.6624
April(?)	"	" "	173,700(?)			
June	"	" "	(?)	.2773	.3952	.6725
November	"	" "	110,418	.2831	.4204	.7035
Inventory	12/31/26	" "	(?)	.2802	.4078	.6880
March	1928	" "	(?)	.4926	.5742	1.0668
August	"	" "	13,491	.4318	.3950	.8268
November	"	" "	5,444	.7143	.7737	1.4880
April,	1929	" "	.....	....	....	....
October	"	" "	.....	....	....	....
November,	1928	" F-7 (Revised)	5,444	.7143	.7737	1.4880
October,	1930	" F-8	.....	....	....	....

(Exhibit Z-3, Page 18)

PLAINTIFF'S EXHIBIT E.

Tabulation of Cost Summary Cards.

Cost Summary Cards:					Production	Cost per Camshaft		
						Labor	Burden	Total
A-6250								
Inventory	12/31/27	(Estimate)	Ex.	F-10		.6362	.6534	1.2896
Special	2/20/28		"	"		.1173	.4277	.5450
March	1928		"	"	32,295	1.1165	1.3014	2.4179
June 1-25	"		"	"	38,664	1.0003	1.1203	2.1206
August	"		"	F-9	96,098	.8625	.7890	1.6515
October	"		"	"	117,348	.7769	.7980	1.5749
November	"		"	"	118,145	.7455	.8075	1.5530
January	1929		"	"	165,184	.7920	.7524	1.5444
March	"		"	E-1	175,960	.7251	.7396	1.4647
May	"		"	"	194,724	.6880	.7086	1.3966
July	"		"	"	198,713	.6246	.7120	1.3366
September	"		"	D	154,561	.6036	.7666	1.3702
October	"		"	"	174,545	.5743	.7466	1.3209
January	1930		"	"	90,529	.5519	.9106	1.4625
March	"		"	"	156,386	.5895	.8548	1.4443
May	"		"	E	197,713	.5668	.7652	1.3320
August	"		"	"	119,328	.5705	.9185	1.4890
October	"		"	"	93,179	.5636	.8398	1.4034
March	1931		"	"	96,815	.5486	.9271	1.4757
F-446:								
May	1925		Ex.	F-11	12,716	.7266	1.0563	1.7829
June	"		"	"	10,485	.8006	1.2520	2.0526
July	"		"	"	9,681	.8140	1.4303	2.2443
August	"		"	"	9,245	.7525	1.2479	2.0004
September	"		"	"	8,745	.7356	1.2410	1.9766
October	"		"	F-12	9,363	.7486	1.2642	2.0128
November	"		"	"	8,825	.6757	1.3316	2.0073
January	1926		"	F-13	11,995	.6789	1.0184	1.6973
February	"		"	"	12,195	.6428	.8678	1.5106
March	"		"	"	15,092	.6594	.9891	1.6485
June	"		"	"	9,645	.7601	1.4898	2.2499
November	"		"	"	4,830	.6642	2.5833	3.2475
December(?)	"		"	"	(?)	.7122	2.0366	2.7488
Inventory	12/31/26		"	"	14,475	.7281	1.8547	2.5828
March	1927		"	"	13,510	.6268	.8360	1.4628
November	"		"	"	(?)	.6563	1.0043	1.6606
March	1928		"	"	2,720	.7642	1.3450	2.1092
Blank			"	G	.....	....	....	....

(Exhibit Z-3, Page 19)

PLAINTIFF'S EXHIBIT F.

Defendant's Proration of Production Between Melling and Pioch Machines.

	Machines Available			Production Assigned		
	Melling	Pioch	Shifts	Melling	Pioch	Total
May 1930 to Feb. 3, 1931:						
May, 1930 (last half)	21	1	32 (used)	186,961	10,752	197,713
June "	21	1	62	169,489	20,832	190,321
July "	21	1	22	56,702	7,392	64,094
August "	21	1	48	103,200	16,128	119,328
Sept. "	21	1	47	94,616	15,792	110,408
Oct. "	21	1	39.5	79,907	13,272	93,179
Nov. "	21	1	36	73,022	12,096	85,118
Dec. "	21	1	26.5	52,616	8,904	61,520
Totals			313	816,513	105,168	921,681
Jan. 1931 (first half)	21	2	9		6,048	
Jan. " (last ")	21	4	18		24,192	
Total			27	32,700	30,240	62,940
Feb. 2 and 3, 1931	21	4	5	5,166	6,720	11,886
Totals, 5-16-30 to 2-3-31			345	854,379	142,128	996,507
Feb. 4 to March 15, 1931:						
Feb. 4 to 28, 1931	13	6	32	.....	75,572	75,572
March 1 to 15, "	13	6	20	.....	39,065	39,065
Totals 2-4 to 3-15-31			52	.....	114,637	114,637

Record of Shifts Operated from May 1, 1930 to March 31, 1931 and of Defendant's Claimed Production with Pioch Machines.

	Days operated				
	3 shifts	2 shifts	1 shift	Total	
May 1 to 15, 1930	9	2	2	33	
May 16 to 30, 1930	8	2	3	31	
May Total	17	4	5	64	(a)
June, 1930	16	5	4	62	
July "	6	1	2	22	
August "	12	4	4	48	
September "	11	5	4	47	
October "	9	4	5	39.5	(b)
November "	8	4	4	36	
December "	6	3	3	26.5	(b)
January, 1931	6	3	3	27	
February "	9	4	2	37	
March "	13	1	0	41	

(a) Total used is 67.

(b) Totals are reduced ½ shift, because of shorter hours in some shifts.

(Exhibit Z-3, Page 20)

PLAINTIFF'S EXHIBIT G.

Evidence of Abandonment of the Use of Melling Cam Lathes for Rough Turning the Cams upon Camshafts.

From Photostatic Copies of Defendant's Permanent Inventory of Machine Tools—Exhibits Y-1 to Y-24.

Exhibit	Manufacturer's Number	Date sent to Track 297	Date Salvaged	Other Data
Y-1	111	2- 5-31	6-18-31	
Y-2	114	2- 5-31	6-18-31	
Y-3	113	2- 5-31	6-18-31	
Y-4	115	2- 5-31	6-18-31	
Y-5 (b)	229	9-13-32		4-11-30 (a) (Still at Highland Park) 11- 9-28—Sold to Cork, Ireland
Y-6	122			
Y-7 (a)	225		11-22-34	10- 7-31 (b) Believed used to turn pump eccentric
Y-8 (a)	214		11-22-34	
Y-9 (a)	226		11-22-34	
Y-10 (a)	110	3-16-31	6-18-31	
Y-11 (a)	109	3-16-31	6-18-31	
Y-12	112	2- 5-31	6-18-31	
Y-13 (a)	106	3-16-31	6-18-31	
Y-14	116	2- 5-31	6-18-31	
Y-15 (a)	118	3-16-31	6-18-31	
Y-16	119	2- 5-31	6-18-31	
Y-17	121		6- 8-36	2- 4-29 Sold to Continental Motors Corpn. 4-23-31 Repurchased—Sent to Highland Park
Y-18 (a)	215		6- 8-36	12- 5-34 Made available at Highland Park 10- 7-31 (c)
Y-19 (b)	227	9-13-32	11-22-34	5- 5-30 (d)
Y-20 (a)	108	3-16-31	6-18-31	
Y-21 (a)	107	3-16-31	6-18-31	
Y-22 (a)	117	3-16-31	6-18-31	"Replaced by a Pioch Machine"
Y-23	120	2- 5-31	6-18-31	"Replaced by a Pioch Machine"
Y-24	105			11- 9-28 Sold to Cork, Ireland

(a) Moved 4-11-30 from J-8 in motor building to K-8 in motor building.
(b) " 10- 7-31 " " " " " " " " " " " " "
(c) " " " " " " " " " " " " " "
(d) " 5- 5-30 " " " " " " " " " " " " "

K is stated to be a machining or operating department, but information was not available as to whether or not a part of Dept. 410.

Melling Lathes that may have been available from February 4 to March 15, 1931.

Machines marked (a) above	11	
Machines marked (b) above	2	13

These machines could readily have produced the output of camshafts from February 4 to March 15, 1931.

PLAINTIFF'S EXHIBIT H.

Additional Savings Based upon Failure of Defendant to Substantiate Claims of Production by Pioch Machines During Periods When Both Melling and Pioch Machines Were or May Have Been Available.

5-16 to 12-31-30—105,168 (a) A-6250 camshafts			
at (Productive Labor saving per camshaft)	$.086694 (b)	$ 9,117.43	
at (Burden " " ")	.134914 (b)	14,188.64	
at (Total " " ")	.221608 (b)		$23,306.07
1-1 to 2-3-31—36,960 (a) A-6250 camshafts			
at (Productive Labor saving per camshaft)	$.087575 (b)	$ 3,236.77	
at (Burden " " ")	.164675 (b)	6,086.39	
at (Total " " ")	.252250 (b)		9,323.16
Total from 5-16-30 to 2-3-31		(Item one)	$32,629.23

No records were furnished by defendant, and apparently none were kept, showing actual respective production of shafts on The Melling Lathes and The Pioch Machines. Since there were 11 to 13 Melling Machines available (see Ex. G of this report) for turning all production from Feb. 3-1931 to March 15-1931, the defendants claimed production in Pioch Machines during this time is not substantiated.

2-4 to 3-15-31—114,637 (a) A-6250 camshafts			
at (Productive Labor saving per camshaft)	$.087575 (c)	$10,039.33	
at (Burden " " ")	.164675 (c)	18,877.85	
at (Total " " ")	.252250 (c)	(Item two)	$28,917.18

(a) See Exhibit F in this report.

(b) See Exhibit B in this report

(c) Same saving per shaft used as during the period from 1-1 to 2-3-31.

Note: The inclusion of the saving shown upon this sheet depends:

In Part upon the lack of sufficient actual records kept by defendant.

In Part upon acceptance of March 15, 1931 as the date upon which the use of the Melling lathes was abandoned.

EXHIBIT Z-5.

DEPRECIATION COST OF FORD CAM SHAPERS OF MODEL T TYPE AND OF MELLING CAM LATHES—FROM JUNE 16, 1925 TO FEBRUARY 3, 1931 AND FROM FEBRUARY 4, 1931 TO MARCH 15, 1931.

Ford Shapers—Model T Type:

	Depreciation Rates	Total for Periods	% To T-410	% To A-6250	Amounts for Periods T-410	Amounts for Periods A-6250
6-16-25 to 12-31-25 (6½ months)	9.5%	6,436.56	100.00		6,436.56	
Year 1926	9.5%	12,160.63	100.00		12,160.63	
1-1-27 to 10-31-27 (10 months)	10.5%	11,656.28	100.00		11,656.28	
November, 1927	10.5%	1,165.63	82.79	17.21	965.03	200.60
December, 1927	10.5%	1,165.63	51.81	48.19	603.91	561.72
Year 1928	10.5%	16,614.74	12.50	87.50	2,076.84	14,537.90
1-1-29 to 1-15-29 (½ month)	10.5%	824.42	1.66	98.34	13.69	810.73
1-15-29 to 1-31-29 (½ month)	10.5%	824.42		100.00		824.42
2-1-29 to 12-31-29 (11 months)	10.5%	18,137.28		100.00		18,137.28
Year 1930	10.5%	23,664.57		100.00		23,664.57
1-1-31 to 2-3-31 (1-1/10 months)	9.0%	1,859.36		100.00		1,859.36
		94,509.52			33,912.94	60,596.58
2-4-31 to 3-15-31 (1-4/10 months)	9.0%	2,366.46		100.00		2,366.46
		96,875.98			33,912.94	62,963.04

Melling Cam Lathes:

6-16-25 to 12-31-25 (6½ months)	9.5%	3,365.57	100.00		3,365.57	
Year 1926	9.5%	6,208.35	100.00		6,208.35	
1-1-27 to 10-31-27 (10 months)	10.5%	5,718.21	100.00		5,718.21	
November, 1927	10.5%	571.82	82.79	17.21	473.41	98.41
December, 1927	10.5%	571.82	51.81	48.19	296.26	275.56
Year 1928	10.5%	6,861.85	12.50	87.50	857.73	6,004.12
1-1-29 to 1-15-29 (½ month)	10.5%	354.17	1.66	98.34	5.88	348.29
1-15-29 to 1-31-29 (½ month)	10.5%	354.17		100.00		354.17
2-1-29 to 12-31-29 (11 months)	10.5%	7,791.84		100.00		7,791.84
Year 1930	10.5%	10,138.51		100.00		10,138.51
1-1-31 to 2-3-31 (1-1/10 months)	9.0%	796.60		100.00		796.60
		42,732.91			16,925.41	25,807.50
2-4-31 to 3-15-31 (1-4/10 months)	9.0%	1,013.85		100.00		1,013.85
		43,746.76			16,925.41	26,821.35

DEPRECIATION OF T-410 CAM SHAPERS AND OF MELLING CAM LATHES REQUIRED FOR PRODUCTION OF F-446 SHAFT.

From June 16, 1925 to March 31, 1928.

Shapers:

Assuming that 1½ times as many shapers as Melling Lathes would have been required (same proportion as for T-410).			
No. of shapers		3	
Cost of shapers 3 x $6,000.00			18,000.00
		Percent	
Depreciation:			
6-15-25 to 12-31-25		5.15	927.00
1926		9.50	1,710.00
1927		10.50	1,890.00
1st quarter of 1928—10.5 ÷ 4		2.625	472.50
			4,999.50

Melling Cam Lathes:

Brass Tag No.			
32067	Cost 2- 9-24	4,121.57	
37001	" 5-29-24	3,973.19	8,094.76
		Percent	
Depreciation:			
6-15-25 to 12-31-25		5.15	416.88
1926		9.50	769.00
1927		10.50	849.95
1st quarter of 1928—10.5 ÷ 4		2.625	212.49
			2,248.32

EXHIBIT Z-6.

MAINTENANCE—T-410 SHAFT.

For Period from June 16, 1925 to May 31, 1927.

Ford Cam Shapers:

Shift Numbers	Number of hours worked	Number of men in maintenance crew	Average Direct Labor Rates	Amount (for 13 shapers)	Proportional increase for 9 additional shapers	Amount (for 22 shapers)
1.	1922	1	.8587	1,650.42	1,142.60	2,793.01
2.	1922	2	.8587	3,300.84	2,285.20	5,586.04
3.	1922	2	.8587	3,300.84	2,285.20	5,586.04
	5766			8,252.10	5,713.00	13,965.09

Melling Cam Lathes:

					Foundry Tool Room (a)	
1.	1922	1	.8587	1,650.42	.....	1,650.42
2.	1922	4	.8587	6,601.69	3,300.84	9,902.53
3.	1922	4	.8587	6,601.69	3,300.84	9,902.53
	5766			14,853.80	6,601.68	21,455.48

(a) There were 2 men in Foundry tool room on each of two shifts, who repaired slides. The proportion of their time so occupied was not stated. Above includes all of their time.

ALL overhauling of Melling cam lathes was performed in production department and by the above maintenance crew. Therefore overhaul expense is included in above total for Melling lathes.

Each shaper was removed from the production department once a year, taken to the MAIN tool room and completely overhauled by an entirely different set of men.

Proportion of this overhaul chargeable to T-410 (P. 4) 29,000.00

Recapitulation:

Shapers—Maintenance	13,965.09	
Overhaul (p. 4)	29,000.00	42,965.09
Melling Lathes—Maintenance	21,455.48	
Overhaul (included in Maintenance)	.....	21,455.48

MAINTENANCE—A-6250 SHAFT.

For the Period from November 1, 1927 to February 3, 1931.

Ford Cam Shapers:

Shift Number	Number of hours worked	Number of hours at eight hours per shift	Number of men in Maintenance crew	Average Direct Labor Rates	Amounts (for 13 shapers)	Proportional increase for 14 additional shapers	Amount (for 27 shapers)
1	648	5,184	1	.8951	4,640.20	4,997.14	9,637.34
2	730	5,840	2	.8951	10,454.77	11,258.98	21,713.75
3	708	5,664	2	.8951	10,139.69	10,919.66	21,059.35
		16,688			25,234.66	27,175.78	52,410.44

Melling Cam Lathes:

						Foundry Tool Room (a)	
1	648	5,184	1	.8951	4,640.20	—	4,640.20
2	730	5,840	4	.8951	20,909.54	10,454.77	31,364.31
3	708	5,664	4	.8951	20,279.38	10,139.69	30,419.07
		16,688			45,829.12	20,594.46	66,423.58

(a) There were 2 men in Foundry tool room on each of two shifts who repaired slides. The proportion of their time so occupied was not stated.
Above includes ALL of their time.

ALL overhauling of Melling cam lathes was performed in production department and by the above maintenance crew. Therefore overhead expense is included in above total for Melling lathes.

Each shaper was removed from the production department once a year, taken to MAIN tool room and completely overhauled by an entirely difference set of men.

Proportion of this overhead chargeable to A-6250 (P. 4) 40,000.00

Recapitulation:

Shapers—Maintenance	52,410.44	
Overhaul	40,000.00	92,410.44
Melling Lathes—Maintenance	66,423.58	
Overhaul (included in Maintenance)	—	66,423.58

Note: The hours worked appear excessive in this sheet. This because full maintenance crew is assumed out every shift. If production per shift was 2913 in April, 1930 and only 1541 per shift in September, 1928, a considerably smaller number of machines would have been required during the latter month and the whole maintenance crew would not have been required.

MAINTENANCE—F-446 SHAFT.

For the Period from June 15, 1925 to March 31, 1928.

If 22 shapers would have been required for T-410 shafts and 3 for F-446 shafts, during the same period of time, the maintenance can be estimated for F-446 as 3/22 of that for T shafts or 13.64%.
As the production period for T shafts selected for maintenance calculation was from 6-16-25 to 5-31-27, 23½ months, and the production period for F-446 shafts was from 6-16-25 to 3-31-28, a period of 33½ months, the time for F-446 should be increased proportionally or by 43.55%.

.1364 x 1.4355 — 19.58 — percentage of T-410 maintenance cost used for F-446.

Shapers—Maintenance—$13,965.09 x .1958		2,734.36
Melling Lathes—Maintenance and Tool Men, $21,455.48 x .1958		4,200.98

Recapitulation:

Shapers—Maintenance	2,734.36	
Overhaul (P. 4)	4,250.00	6,984.36
Melling Lathes—Maintenance		
Overhaul (included in Maintenance) ..		4,200.98

OVERHAUL EXPENSE.

Overhauling of Melling cam lathes was done by maintenance crew in Dept. 410. Therefore cost of overhauling is included in maintenance cost.

In the case of the Ford Shapers, however, each machine was removed bodily from Department 410 once each year, taken to the *main* tool room and completely overhauled by men not connected with Dept. 410.

No cost of those overhauls has been supplied, but a complete overhaul of expensive machines such as the shapers may well have averaged $1,000. It would hardly be less than $500. If in the absence of information, the average overhaul cost is estimated at $500, the following additional cost would be chargeable to the shapers:

	Number of Shaper Overhauls			Cost of Overhauling			
Period	T-410	A-6250	F-446	T-410	A-6250	F-446	Total
6/15 to 12/31/25.	12(a)	—0—	1.5	6,000.00	—0—	750.00	6,750.00
1926	22	—0—	3	11,000.00	—0—	1,500.00	12,500.00
1927	21	1	3	10,500.00	500.00	1,500.00	12,500.00
1928	3	19	1(b)	1,500.00	9,500.000	500.00	11,500.00
1929	0	30	—0—	—0—	15,000.00	—0—	15,000.00
1930	0	30	—0—	—0—	15,000.00	—0—	15,000.00
Totals				29,000.00	40,000.00	4,250.00	73,250.00

(a)—6½/12 of 22.

(b)—3 months.

No overhauling shown for 1931 as machines were abandoned by March 15.

EXHIBIT Z-7.

COST OF TOOLS—INCLUDING GRINDING FORD SHAPERS OF T-410 TYPE AND MELLING CAM LATHES.

Type	Shafts Produced	Cost per Shaft		Total Cost	
		Ford Shapers	Melling Lathes	Ford Shapers	Melling Cam Lathes
T-410	3,420,166	.00300	.00087	10,260.50	2,975.54
A-6250	4,222,999	.00344	.00100	14,527.12	4,223.00
F-446	275,664	.00556	.00161	1,532.69	443.82
				26,320.31	7,642.36

See page 2 for details.

COST OF TOOLS, INCLUDING GRINDING.

Ford Cam Snapers:

Ex. 9(g) of Defendant's Statement of Account gives tool cost per T-410 camshaft (based on record for 1922 and 1923) as			.00270	
Grinding Cost—P. 1765 of typewritten record of hearing beginning January 16, 1939, states that grinding 12 tools requires 15 man minutes—15 minutes at 90¢ per hour		$ .225		
Grinding cost of 8 tools—2/3 of .225 or		$ .15		
Assuming 500 shafts per set of 8 tools, grinding cost of tools per each T-410 shaft ($.15 ÷ 500)			.00030	.00300
Total tool cost per T-410 shaft				
Had it been possible to use T-410 shapers for the large bearing shafts, cost would probably been proportional to areas of cams				
A-6250 — 1.14640 x T-410	.00344			
F-446 — 1.85287 x T-410	.00556			

Melling Lathes:

Cost of 8 tools (per Ex. 8(h) of Defendant's Statement of Account)	$2.00			
Hours of life (per do.)	200			
Production per machine hour—T-410	37.5			
T-410 camshafts per tool life—37.5 x 200, or 7500				
Cost per T-410 camshaft $2.00 ÷ 7500			.00027	
Grinding Cost. P. 1765 of typewritten record of hearing beginning January 16, 1939, states that grinding 12 tools requires 30 man minutes.				
30 minutes at 90¢ per hour		$ .45		
Grinding cost of 8 tools—2/3 of .45 or		$ .30		
Assuming 500 shafts per set of 8 tools, grinding cost of tools per each T-410 shaft ($.30 ÷ 500)			.00060	
Total cost per T-410 shaft				.00087
A-6250 — 1.14640 x T-410	.00100			
F-446 — 1.85287 x T-410	.00161			

NO.

CASH OR CHG.

CLASS OF SERVICE DESIRED			
DOMESTIC		CABLE	
TELEGRAM	X	FULL RATE	
DAY LETTER		DEFERRED	
NIGHT MESSAGE		CABLE LETTER	
NIGHT LETTER		WEEK END LETTER	

Patrons should check class of service desired; otherwise message will be transmitted as a full-rate communication.

WESTERN UNION

NEWCOMB CARLTON, PRESIDENT J. C. WILLEVER, FIRST VICE-PRESIDENT

NO.	CASH OR CHG.
CHECK	
TIME FILED	

1206 A

Send the following message, subject to the terms on back hereof, which are hereby agreed to

#CC
28
3/19/35

MILWAUKEE WISCONSIN NOVEMBER 18 1930

FORD MOTOR COMPANY
ATTENTION HENRY FORD
DETROIT MICHIGAN

RE GORDON PATENT NUMBER ONE FIVE FOUR TWO EIGHT NAUGHT THREE RELATING TO CAMSHAFT LATHES AND ADJUDICATED SIXTH CIRCUIT COURT OF APPEALS GORDON FORM LATHE COMPANY PATENT OWNER HAS CONCLUDED SETTLEMENT WITH GENERAL MOTORS AND OTHER AUTOMOBILE COMPANIES FOR PAST AND LICENSE FOR FUTURE STOP HAVE BEEN INSTRUCTED TO FILE SUIT AGAINST YOUR COMPANY STOP PAPERS READY FOR FILING BUT BEFORE PROCEEDING WITH SUIT PROPOSE CONFERENCE WITH YOUR ATTORNEYS TO DISCUSS POSSIBILITIES OF SETTLEMENT WITH YOUR COMPANY STOP SHALL EXPECT REPLY TOMORROW NINETEENTH

BOTTUM HUDNALL LECHER MCNAMARA AND MICHAEL

CHG SENDER

NOTE: REPORT DELIVERY OF TELEGRAM

WESTERN UNION MESSENGERS ARE AVAILABLE FOR THE DELIVERY OF NOTES AND PACKAGES

PLAINTIFF'S EXHIBIT NO. CC

PATRONS ARE REQUESTED TO FAVOR THE COMPANY BY CRITICISM AND SUGGESTION CONCERNING ITS S

CLASS OF SERVICE

This is a full-rate Telegram or Cablegram unless its deferred character is indicated by a suitable sign above or preceding the address.

WESTERN UNION

NEWCOMB CARLTON, PRESIDENT J. C. WILLEVER, FIRST VICE-PRESIDENT

1930 NOV 18 PM 4 14

The filing time as shown in the date line on full-rate telegrams and day letters, and the time of receipt at destination as shown on all messages, is STANDARD TIME.

Received at First Wis. Nat. Bank Bldg., Milwaukee, Wis.

DD
7/9/38

AU126 13 COLLECT=DETROIT MICH 18 456P

BOTTUM HUDNALL LECHER MCNAMARA & MICHAEL=

ASKING R D FM=

YOUR FORD MOTOR CO DELIVERED OVER PRIVATE WIRE 220 PM=

WESTERNUNION=

THE QUICKEST, SUREST AND SAFEST WAY TO SEND MONEY IS BY TELEGRAPH OR CABLE

PLAINTIFF'S EXHIBIT NO. DD

PLAINTIFF'S EXHIBIT RR

THE GORDON FORM LATHE CO.
AGREEMENT FILE

MEMORANDUM OF AGREEMENT made and entered into by and between GORDON FORM LATHE COMPANY, an Ohio Corporation, hereinafter called "GORDON", and CHRYSLER CORPORATION, a Delaware corporation, hereinafter called "CHRYSLER".

WITNESSETH

WHEREAS, Gordon is the owner of the entire right, title and interest in and to Letters Patent of the United States No. 1,542,803, dated June 16, 1925, covering an improved Lathe; and

WHEREAS, in an action entitled "Gordon Form Lathe Company versus Walcott Machine Company", decided by the United States Circuit Court of Appeals for the Sixth Circuit on April 12, 1929, said patent as to certain of its claims was held valid and infringed by certain cam turning and crank shaft contour lathes heretofore manufactured and sold by the Walcott Machine Company of Jackson, Michigan; and

WHEREAS, Chrysler Corporation has heretofore purchased and used, and is now using certain of said infringing lathes manufactured by the said Walcott Machine Company and now desires to free and release said lathes for the future from infringement of said Letters Patent.

NOW, THEREFORE, for and in consideration of One Dollar ($1.00) by each of the parties to the other in hand paid, receipt whereof is hereby acknowledged, and other valuable considerations, each of the parties to the other moving, the said parties have covenanted and agreed as follows:

FIRST: Gordon hereby releases and frees from infringement of said Letters Patent of the United States

No. 1,542,803, the hereinafter identified cam turning lathes, now in the possession of said Chrysler Corporation, said release to take effect as of April 12, 1929, and to continue throughout the life of said lathes; the lathes so released being the following:

Chrysler Number	Maker's Serial Number
C. M. 3553	127
C. M. 3016	101
C. M. 5803	182
H. 837	200
H. 838	202
H. 2841	213
E. 3155	53
E. 4564	136
9860	65
9920	57
10141	55
10150	54
11635	89
13035	126
17079	161
17112	162

Second: Gordon agrees that it will issue a similar license unto Chrysler for such other and further machines as Chrysler may acquire and request a license for upon payment by Chrysler to Gordon of the sum of Three Thousand Dollars ($3,000) for each such machine; provided, however, that if any such machine shall be intended for use upon shafts for less than six cylinder machines, the payment required shall be only Two Thousand Dollars ($2,000) per machine.

Third: In consideration of the foregoing release, the said Chrysler Corporation agrees to pay Gordon, upon execution of this agreement, the sum of Forty Six Thousand Dollars ($46,000), such payment being at the rate

of Three Thousand Dollars ($3,000) per lathe, except as to machine numbers 9860 and 9920, which are intended for use in turning cam shafts for four cylinder engines, the rate for such machines being Two Thousand Dollars ($2,000) each, and in addition to grant Gordon a non-exclusive, non-assignable license under Letters Patent of the United States No. 1,246,191, dated November 13, 1917.

FOURTH: It is distinctly understood and agreed that the release under clause FIRST hereof applies only to the use of said lathes subsequent to the effective date of said release, viz:—April 12, 1929; Gordon expressly reserving unto itself, its successors and assigns, any and all claims it now has, or may hereafter acquire, for, or arising out or by reason of the infringement of its said patent by the said Chrysler Corporation through the use of said lathes or any other infringing lathes at or during any time prior to April 13, 1929.

FIFTH: It is further agreed that in the event of litigation directed to a recovery for infringement of said patent No. 1,542,803 prior to April 13, 1929, neither party hereto shall in any wise use this agreement as affecting the measure of damages for such infringement.

SIXTH: It is further agreed that Gordon, or its duly appointed representative or attorney, shall have access to the manufacturing plants of Chrysler following the execution of this agreement for the purpose of verifying the number of infringing lathes in use or in the possession of said Chrysler Corporation and the identifying markings thereon, as set forth under clause FIRST hereof.

SEVENTH: The said Chrysler Corporation acknowledges and acquiesces in the validity of said Letters Patent No. 1,542,803, but only as to those claims sustained in said litigation, and covenants and agrees that it will not in any proceeding, either in equity or at law, directly or indirectly, deny or contest its validity or assert its invalidity.

EIGHTH: Gordon further agrees that it will not grant a similar license or release to any other person, firm or corporation for a sum of money less than that herein agreed upon per machine; it being understood and agreed that if this undertaking shall be violated, then Chrysler shall be entitled to a similar rate both as to machines herein enumerated and as to any other machines which it may hereafter request license for.

NINTH: It is mutually understood and agreed by and between the parties that in the event said patent No. 1,542,803 shall be sold or otherwise disposed of to any person, firm or corporation for the benefit or in consideration of money furnished by any group of automotive manufacturers, Chrysler shall be given an opportunity to join with said group of automotive manufacturers, and to apply any moneys paid to Gordon under the terms of this agreement toward the purchase price of said patent; it being understood, however, that in the event Chrysler shall elect to so join with such group of manufacturers and have said moneys applied to said purchase price, then the license and release herein granted shall be void and of no effect.

TENTH: This agreement shall be binding upon and inure to the benefit of the respective successors and assigns of the parties hereto.

Signed, sealed and delivered this 17th day of July, 1929.

GORDON FORM LATHE COMPANY

By CHAS. GORDON,
President.

Attest:

.....
Secretary.

CHRYSLER CORPORATION

By K. T. KELLER,
Vice President.

Attest:

.... MORRISON,
Secretary.

Copy

December 16, 1929

The White Motor Company,
842 E. 79th Street,
Cleveland, Ohio.

Attention—Mr. Cooper

RE: *Gordon Cam Lathe Patent*

Dear Mr. Cooper:

I have been expecting to hear from you on the matter of settlement which we discussed in Mr. Richey's office some few weeks ago. We have now instituted some suits and are preparing to extend our activities in that direction and would like to have a definite expression from you as to what The White Company proposes to do in the matter.

Very truly yours,

BOTTUM HUDNALL LECHER
McNAMARA & MICHAEL

By

JWM HH

#HH
LJB
7/19/38

Copy

THE WHITE MOTOR COMPANY
Manufacturers of
WHITE TRUCKS AND BUSSES

WALTER C. WHITE, President
GEORGE H. KELLY, Treasurer
T. R. DAHL, Secretary

Cleveland, Ohio
December 24, 1929.

Mr. J. W. Michael,
Bottum, Hudnall, Lecher, McNamara & Michael
Trust Company Building,
Milwaukee, Wis.

Re: *Gordon Cam Lathe Patent*

Dear Sir:

Your letter of December 16, 1929, has been received.

We would like to effect a settlement both for the past and the future, and are herewith submitting the data which you requested during our discussion of this subject in Mr. Richey's office.

Number of crankshaft contour machines owned by the White Motor Company....	0
Number of cam cutting machines owned by the White Motor Company..... (Both of the 4-cylinder camshaft type)	2
Number of cams cut prior to July 1, 1925	0
Number of cams cut from July 1, 1925, to June 12, 1929 (37,919 camshafts).....	303,352
Number of cams cut from June 12, 1929, to Dec. 21, 1929 (3,013 camshafts).....	24,104

We do not believe that we were given proper and adequate notice of infringement prior to June 12, 1929, but in order to effect an early and complete settlement of this matter we are willing to pay the Gordon Form Lathe Company the sum of Five Thousand Dollars ($5,000), the same to cover both past damages and the future release of our two machines.

Please let us have an early reply.

Yours very truly,

THE WHITE MOTOR COMPANY
/s/ R. M. Cooper
Patent Engineer.

R. M. Cooper

RMC:hb

Copy

December 27, 1929

The White Motor Company,
842 E. 79th Street,
Cleveland, Ohio.

Attention—Mr. R. N. Cooper, Patent Engineer

Dear Mr. Cooper:

In view of agreements, both executed and pending, we are not in a position to release your infringing machines for less than the sum of $2,000.00 per each 4-cylinder cam shaft type nor, in respect of the past, are we in a position to accept less than ¾ths of a cent per cam.

Your present offer of $5,000.00, as embodied in your letter of December 24th, covers the $2,000.00 release for each of the two machines you report but only leaves

$1,000.00 to apply on the past, which figures about 1/3 of a cent per cam. At ¾ths of a cent per cam, the total amount, including the release of each machine and the past, would, on the statement you have submitted, amount to $6,455.92.

We are agreeable to settling the matter with you on this basis to cover both the past and the release of the machines for the future or, if you prefer, are agreeable to releasing your two machines on the basis of $2,000.00 per machine and reserving the past for future determination.

We have every reason to believe that ¾ths of a cent per cam is but a very small percentage of the actual savings resulting from the use of the Gordon invention.

Please let us hear from you promptly.

Very truly yours,

BOTTUM HUDNALL LECHER
McNAMARA & MICHAEL

By

JWM HH
c. c. to Mr. Richey and
Mr. Gordon

Copy

THE WHITE MOTOR COMPANY
Manufacturers of
WHITE TRUCKS AND BUSSES

WALTER C. WHITE, President
GEORGE H. KELLY, Treasurer
T. R. DAHL, Secretary

Cleveland, Ohio
January 16, 1930.

Mr. J. W. Michael
Bottum, Hudnall, Lecher, McNamara & Michael
Milwaukee, Wisconsin.

Re: *Gordon Cam Lathe Patents*

Dear Sir:

We have decided, in case we can secure a satisfactory agreement, to accept your offer to release our two machines on the basis of Two Thousand Dollars ($2,000) per machine, leaving the matter of past infringement for future determination. We, therefore, request that you submit to us an agreement covering such release.

An agreement similar to the one which the Gordon Form Lathe Company executed with the Chrysler Corporation will be acceptable to us, with the addition of a clause which will permit us upon payment of an additional One Thousand Dollars ($1,000) per machine to convert either or both of our machines into machines for use upon shafts for six or more cylinder engines.

Yours very truly,

THE WHITE MOTOR COMPANY
/s/ R. M. COOPER
R. M. Cooper
Patent Engineer.

RMC:hb
cc—Messrs. Church
Dahl

1536

(Copy)

January 18th,
1930

The White Motor Company
Cleveland
Ohio

Attention—R. M. Cooper, Patent Engineer.

Gentlemen:

Replying to your letter of January 16th, we have prepared and enclose an agreement covering the release of your two machines.

While we are quite willing, as stated in one of our previous letters, to leave the matter of past infringement for future determination, we feel that you should know that we will be unwilling to settle with you for the past on the 3/4ths of a cent basis if we are forced to file suit. In such event, we shall insist upon and endeavor to collect all that the law allows, which, according to our calculations, is substantially greater than the rate of 3/4ths of a cent per cam.

Please execute both copies of the agreement and return to us with your check for Four Thousand ($4,000.00) Dollars. We shall then have the agreement executed by the Gordon Form Lathe Company and one copy returned to you.

Very truly yours,

BOTTUM HUDNALL LECHER
McNAMARA & MICHAEL

By:

JWM HH
encls.

(Copy)

THE WHITE MOTOR COMPANY
Manufacturers of
WHITE TRUCKS AND BUSSES

WALTER C. WHITE, President
GEORGE H. KELLY, Treasurer
T. R. DAHL, Secretary

Cleveland, Ohio
February 4, 1930.

Mr. J. W. Michael
Bottum, Hudnall, Lecher, McNamara & Michael
Milwaukee, Wisconsin.

Dear Sir:

Please find herewith, duly executed by us, two copies of an agreement for the future release of our two cam turning machines.

Please also find enclosed two copies of an agreement releasing us from all claims and demands for past infringement.

The enclosed agreements are identical with the agreements submitted to us, except that the agreement for the future release of our two machines has been amended, for the purpose of eliminating an intervening period between the effective dates of the two agreements, to become effective on the same date as the agreement releasing us from past infringement, viz., December 21, 1929.

We believe that the above amendment will meet with your approval, and are enclosing herewith our check for Six Thousand Four Hundred Fifty-five Dollars and

ninety-two cents ($6,455.92), the sum of the amounts set forth in the two agreements.

Yours very truly,

THE WHITE MOTOR COMPANY
/s/ R. M. Cooper

R. M. Cooper
Patent Engineer.

RMC:hb
Encs.

(Copy)

February 8th, 1930.

The White Motor Company
Cleveland
Ohio

Attention—Mr. Cooper, Patent Engineer
re: *Gordon Patent*

Gentlemen:

Your letter of February 4th, enclosing signed agreements and check in the above matter, was duly received.

The agreement and the release for the past have now been executed by The Gordon Form Lathe Company and the originals thereof are enclosed to you herewith. The executed duplicates are retained for onr files.

The Secretary of The Gordon Company is located in Cincinnati and we have not deemed it necessary to forward the papers to him for signature, but will do so if you insist. The Secretary's signature has not appeared on previous agreements of the same character and, of course, is not necessary.

Thanking you for your cooperation in this matter, we remain,

Very truly yours,

BOTTUM HUDNALL LECHER
McNAMARA & MICHAEL
By:

JWM HH
Encl.

(Copy)

THE WHITE MOTOR COMPANY
Manufacturers of
WHITE TRUCKS AND BUSSES

WALTER C. WHITE, President
GEORGE H. KELLY, Treasurer
T. R. DAHL, Secretary

Cleveland, Ohio
February 12, 1930,

Mr. J. W. Michael
Bottum, Hudnall, Lecher, McNamara & Michael
Milwaukee, Wisconsin.

Re: *Past and future infringement of the Gordon Patent* 1,542,803

Dear Sir:

This will acknowledge the receipt of your letter of February 8th, enclosing executed copies of the Agreement and Release in the above matter.

Yours very truly,

THE WHITE MOTOR COMPANY
/s/ R. M. COOPER
R. M. Cooper
Patent Engineer.

RMC:hb

1540

#GG
LJB
7/19/38

FOR AND IN CONSIDERATION of Twenty-four Hundred Fifty-five Dollars and Ninety-two Cents ($2,455.92), the undersigned, GORDON FORM LATHE COMPANY, an Ohio Corporation, owner of the entire right, title and interest in and to Letters Patent of the United States No. 1,542,803, dated June 16th, 1925, covering an improved Lathe, hereby releases and forever discharges THE WHITE MOTOR COMPANY, an Ohio Corporation of Cleveland, Ohio, from all claims and demands for past infringement of said patent No. 1,542,803, by reason of its use and the Two (2) 4-cylinder cam shaft type infringing lathes identified in Agreement of even date herewith, releasing said machines for future use.

DATED this 21st day of December, 1929.

GORDON FORM LATHE COMPANY
By CHAS. GORDON,
President.

MEMORANDUM OF AGREEMENT made and entered into by and between GORDON FORM LATHE COMPANY, an Ohio Corporation, hereinafter called "GORDON", and THE WHITE MOTOR COMPANY, an Ohio Corporation, hereinafter called "WHITE".

WITNESSETH

WHEREAS, Gordon is the owner of the entire right, title and interest in and to Letters Patent of the United States No. 1,542,803, dated June 16, 1925, covering an improved lathe; and

WHEREAS, in an action entitled "Gordon Form Lathe Company versus Walcott Machine Company", decided by the United States Circuit Court of Appeals for the

Sixth Circuit on April 12, 1929, said patent as to certain of its claims was held valid and infringed by certain cam turning and crank shaft contour lathes heretofore manufactured and sold by the Walcott Machine Company of Jackson, Michigan; and

WHEREAS, White has heretofore purchased and used, and is now using certain of said infringing lathes manufactured by the said Walcott Machine Company and now desires to free and release said lathes for the future from infringement of said Letters Patent.

NOW, THEREFORE, for and in consideration of One Dollar ($1.00) by each of the parties to the other in hand paid, receipt whereof is hereby acknowledged, and other valuable considerations, each of the parties to the other moving, the said parties have covenanted and agreed as follows:

FIRST: Upon the representation of White that the infringing lathes it desires to free and release are for use only upon cam shafts for less than 6-cylinder engines, Gordon hereby releases and frees from infringement of said Letters Patent of the United States No. 1,542,803 at the rate hereinafter specified, the following identified cam turning lathes now in the possession of White, said release to take effect as of December 21, 1929, and to continue throughout the life of said lathes:

WHITE NUMBER	MAKER'S SERIAL NUMBER
2582	134
1912	157

SECOND: Gordon agrees that it will issue a similar license unto White for such other and further machines as White may acquire and request a license for upon payment by White to Gordon of the sum of Three Thousand ($3,000.00) Dollars for each such machine for use upon cam shafts for six (6) or more cylinder engines and Two Thousand ($2,000.00) Dollars for each such machine for use upon cam shafts for less than 6-cylinder engines.

THIRD: In consideration of the foregoing release, White agrees to pay Gordon, upon execution of this agreement, the sum of Four Thousand ($4,000.00) Dollars, such payment being at the rate of Two Thousand ($2,000.00) Dollars per lathe. It is agreed that White may convert either or both of said machines into machines for use upon cam shafts for six (6) or more cylinder engines upon payment of an additional One Thousand ($1,000.00) Dollars per machine and White agrees that in the event of conversion, it will make such additional payment unto Gordon within Twenty (20) days following the conversion.

FOURTH: It is distinctly understood and agreed that the release under Clause FIRST hereof applies only to the use of said lathes subsequent to the date of execution hereof; Gordon expressly reserving unto itself, its successors and assigns any and all claims it now has or may hereafter acquire, for, or arising out or by reason of the infringement of its patent by White through the use of said lathes or any other infringing lathes at or during any time prior to the date hereof.

FIFTH: It is further agreed that in the event of litigation directed to a recovery for infringement of said patent No. 1,542,803 prior to the date hereof, neither party hereto shall in any wise use this agreement as affecting the measure of damages for such infringement.

SIXTH: It is further agreed that Gordon, or its duly appointed representative or attorney, shall have access to the manufacturing plants of White, following the execution of this agreement, for the purpose of verifying the number of infringing lathes in use or in the possession of White and the identifying markings thereon as set forth under Clause FIRST hereof.

SEVENTH: White acknowledges and acquiesces in the validity of said Letters Patent No. 1,542,803, but only as to those claims sustained in said litigation, and coven-

ants and agrees that it will not in any proceeding, either in equity or at law, directly or indirectly, deny or contest its validity or assert its invalidity.

EIGHTH: Gordon further agrees that it will not grant a similar license or release to any other person, firm or corporation for a sum of money less than that herein agreed upon per machine; it being understood and agreed that if this undertaking shall be violated, then White shall be entitled to a similar rate, both as to machines herein enumerated and as to any other machines which it may hereafter request license for.

NINTH: It is mutually understood and agreed by and between the parties that in the event said patent No. 1,542,803 shall be sold or otherwise disposed of to any person, firm or corporation for the benefit or in consideration of money furnished by any group of automotive manufacturers, White shall be given an opportunity to join with said group of automotive manufacturers, and to apply any moneys paid to Gordon under the terms of this agreement toward the purchase price of said patent; it being understood, however, that in the event White shall elect to so join such group of manufacturers and have said moneys applied to said purchase price, then the license and release herein granted shall be void and of no effect.

TENTH: This agreement shall be binding upon and inure to the benefit of the respective successors and assigns of the parties hereto.

Signed, sealed and delivered this 6th day of February, 1930.

GORDON FORM LATHE COMPANY

Attest:

..... By CHAS. GORDON,
Secretary. President.

THE WHITE MOTOR COMPANY

Attest:

T. R. DAHL, By SAUNDERS JONES,
Secretary. Vice President.

MEMORANDUM OF AGREEMENT made and entered into by and between GORDON FORM LATHE COMPANY, an Ohio Corporation, hereinafter called "GORDON", and J. I. CASE COMPANY, a Wisconsin Corporation, hereinafter called "CASE".

WITNESSETH

WHEREAS, Gordon is the owner of the entire right, title and interest in and to Letters Patent of the United States No. 1,542,803, dated June 16, 1925, covering an improved lathe; and

WHEREAS, in an action entitled "Gordon Form Lathe Company versus Walcott Machine Company", decided by the United States Circuit Court of Appeals for the Sixth Circuit on April 12, 1929, said patent as to certain of its claims was held valid and infringed by certain cam turning and crank shaft contour lathes heretofore manufactured and sold by the Walcott Machine Company of Jackson, Michigan; and

WHEREAS, Case has heretofore purchased and used, and is now using certain of said infringing lathes manufactured by the said Walcott Machine Company and now desires to free and release said lathes for the future from infringement of said Letters Patent.

NOW, THEREFORE, for and in consideration of One Dollar ($1.00) by each of the parties to the other in hand paid, receipt whereof is hereby acknowledged, and other valuable considerations, each of the parties to the other moving, the said parties have covenanted and agreed as follows:

FIRST: Upon the representation of Case that the infringing lathes it desires to free and release are for use only upon cam shafts for less than 6-cylinder engines, Gordon hereby releases and frees from infringement of said Letters Patent of the United States No. 1,542,803 at the rate hereinafter specified, the following identified cam turning lathes now in the possession of Case, said

release to take effect as of February 18th, 1930, and to continue throughout the life of said lathes:

Case Number	Maker's Serial Number
SW 5081	209
SW 5227	221

Second: Gordon agrees that it will issue a similar license unto Case for such other and further machines as Case may acquire and request a license for upon payment by Case to Gordon of the sum of Three Thousand ($3,000.00) Dollars for each such machine for use upon cam shafts for six (6) or more cylinder engines and Two Thousand ($2,000.00) Dollars for each such machine for use upon cam shafts for less than 6-cylinder engines.

Third: In consideration of the foregoing release, Case agrees to pay Gordon, upon execution of this agreement, the sum of Four Thousand ($4,000.00) Dollars, such payment being at the rate of Two Thousand ($2,000.00) Dollars per lathe. It is agreed that Case may convert either or both of said machines into machines for use upon cam shafts for six (6) or more cylinder engines upon payment of an additional One Thousand ($1,000.00) Dollars per machine and Case agrees that in the event of conversion, it will make such additional payment unto Gordon within Twenty (20) days following the conversion.

Fourth: It is distinctly understood and agreed that the release under Clause First hereof applies only to the use of said lathes subsequent to the date of execution hereof; Gordon expressly reserving unto itself, its successors and assigns any and all claims it now has or may hereafter acquire, for, or arising out or by reason of the infringement of its patent by Case through the use of said lathes or any other infringing lathes at or during any time prior to the date hereof.

Fifth: It is further agreed that in the event of liti-

gation directed to a recovery for infringement of said patent No. 1,542,803 prior to the date hereof, neither party hereto shall in any wise use this agreement as affecting the measure of damages for such infringement.

SIXTH: It is further agreed that Gordon, or its duly appointed representative or attorney, shall have access to the manufacturing plants of Case, following the execution of this agreement, for the purpose of verifying the number of infringing lathes in use or in the possession of Case and the identifying markings thereon as set forth under Clause FIRST hereof.

SEVENTH: Case acknowledges and acquiesces in the validity of said Letters Patent No. 1,542,803, but only as to those claims sustained in said litigation, and covenants and agrees that it will not in any proceeding, either in equity or at law, directly or indirectly, deny or contest its validity or assert its invalidity.

EIGHTH: Gordon further agrees that it will not grant a similar license or release to any other person, firm or corporation for a sum of money less than that herein agreed upon per machine; it being understood and agreed that if this undertaking shall be violated, then Case shall be entitled to a similar rate, both as to machines herein enumerated and as to any other machines which it may hereafter request license for.

NINTH: It is mutually understood and agreed by and between the parties that in the event said patent No. 1,542,803 shall be sold or otherwise disposed of to any person, firm or corporation for the benefit or in consideration of money furnished by any group of automotive manufacturers, Case shall be given an opportunity to join with said group of automotive manufacturers, and to apply any moneys paid to Gordon under the terms of this agreement toward the purchase price of said patent; it being understood, however, that in the event Case shall elect to so join with such group of manufac-

turers and have said moneys applied to said purchase price, then the license and release herein granted shall be void and of no effect.

TENTH: This agreement shall be binding upon and inure to the benefit of the respective successors and assigns of the parties hereto.

Signed, sealed and delivered this 18th day of February, 1930.

GORDON FORM LATHE COMPANY
By CHAS. GORDON,
President.

Attest:
THEO. JOHNSON,
Secretary.

J. I. CASE COMPANY
By JOS. BIGGERT,
Vice President.

Also introduced as
Ex. F F
LJB
7/19/38

FOR AND IN CONSIDERATION of Ten Hundred Fifty-five Dollars and Twenty-eight Cents ($1,055.28), figured at the rate of ¾ths of a cent per cam on a total production of 140,704 cams turned on infringing machines intervening between November 22nd, 1928, the date of the first installation, and February 18th, 1930, the date of this release, the undersigned, The Gordon Form Lathe Company, an Ohio Corporation, owner of the entire right, title and interest in and to Letters Patent of the United States No. 1,542,803, dated June 16th, 1925, covering an improved lathe, hereby releases and forever discharges the J. I. Case Company, a Wisconsin Corporation of Racine, Wisconsin, from all claims and demands for past infringement of said patent by reason of its use of the

Two (2) four-cylinder cam shaft type infringing lathes identified in an agreement of even date herewith, releasing said machines for future use.

DATED this 18th day of February, 1930.

GORDON FORM LATHE COMPANY
By CHAS. GORDON,
President.

MEMORANDUM OF AGREEMENT made and entered into by and between GORDON FORM LATHE COMPANY, an Ohio corporation, hereinafter called "GORDON", and THE NASH MOTORS COMPANY, a Maryland corporation, hereinafter called "NASH",

WITNESSETH:

WHEREAS, Gordon is the owner of the entire right, title and interest in and to Letters Patent of the United States No. 1,542,803, dated June 16, 1925, covering an improved Lathe; and

WHEREAS, in an action entitled "Gordon Form Lathe Company versus Walcott Machine Company", decided by the United States Circuit Court of Appeals for the Sixth Circuit on April 12, 1929, said patent as to certain of its claims was held valid and infringed by certain cam turning and crank shaft contour lathes heretofore manufactured and sold by the Walcott Machine Company of Jackson, Michigan; and

WHEREAS, Nash has heretofore purchased and used and is now using certain Lathes manufactured by the said Walcott Machine Company employing the construction referred to in the decision above described and now desires to free and release said Lathes for the future from any claim of infringement of said Letters Patent.

Now, Therefore, for and in consideration of One Dollar ($1.00) by each of the parties to the other in hand paid, receipt whereof is hereby acknowledged, and other valuable considerations, each of the parties to the other moving, the said parties have covenanted and agreed as follows:

First: Gordon hereby releases and frees from infringement of said Letters Patent of the United States No. 1,542,803, the hereinafter identified cam turning Lathes now in the possession of Nash, said release to take effect as of October 1, 1929 and to continue throughout the life of said Lathes; the Lathes so released being for use upon cam shafts for Six or more cylinder engines, and being identified as follows:

Nash Number	Maker's Serial Number
	124 (Milwaukee Plant)
	146 (" ")
	128 (Racine Plant)
	192 (" ")

Second: Gordon agrees that it will issue a similar license unto Nash for such other and further Lathes as Nash may acquire and request a license for upon payment by Nash to Gordon of the sum of Three Thousand Dollars ($3,000) for each such Lathe; provided, however, that if any such Lathe shall be intended for use upon shafts for less than six cylinder machines, the payment required shall be only Two Thousand Dollars ($2,000) per Lathe.

Third: In consideration of the foregoing release, Nash agrees to pay Gordon upon execution of this agreement the sum of Twelve Thousand Dollars ($12,000), such payment being at the rate of Three Thousand Dollars ($3,000) per Lathe.

FOURTH: It is distinctly understood and agreed that the release under clause FIRST hereof applies only to the use of said lathes subsequent to the effective date of said release, viz:—October 1, 1929; Gordon expressly reserving unto itself, its successors and assigns, any and all claims it now has or may hereafter acquire for or arising out or by reason of the claimed infringement of its said patent by Nash through the use of said lathes or any other infringing lathes at or during any time prior to October 1, 1929.

FIFTH: It is further agreed that in the event of litigation directed to a recovery for infringement of said patent No. 1,542,803, prior to October 1, 1929, neither party hereto shall in any wise use this agreement as affecting the measure of damages for such infringement.

SIXTH: It is further agreed that Gordon or its duly appointed representative or attorney shall have access to the manufacturing plants of Nash following the execution of this agreement, for the purpose of verifying the number of infringing lathes in use or in the possession of Nash and the identifying markings thereon as set forth under clause FIRST hereof.

SEVENTH: Gordon further agrees that it will not grant a similar license or release to any other person, firm or corporation for a sum of money less than that herein agreed upon per machine; it being understood and agreed that if this undertaking shall be violated, then Nash shall be entitled to a similar rate, both as to machines herein enumerated and as to any other machines which it may hereafter request license for.

EIGHTH: It is mutually understood and agreed by and between the parties that in the event said patent No. 1,542,803 shall be sold or otherwise disposed of to any person, firm or corporation for the benefit or in consid-

eration of money furnished by any group of automotive manufacturers, Nash shall be given an opportunity to join with said group of automotive manufacturers, and to apply any moneys paid to Gordon under the terms of this agreement toward the purchase price of said patent; it being understood, however, that in the event Nash shall elect to so join with such group of manufacturers and have said moneys applied to said purchase price, then the license and release herein granted shall be void and of no effect.

NINTH: This agreement shall be binding upon and inure to the benefit of the respective successors and assigns of the parties hereto.

Signed, sealed and delivered this first day of March, A. D. 1930.

GORDON FORM LATHE COMPANY
By CHAS. GORDON,
President.

(Corporate Seal)

THE NASH MOTORS COMPANY
By C. W. NASH,
President.

Attest:
H. J. MELLUM,
Secretary.

THIS AGREEMENT made this 30 day of October, 1930, by and between THE GORDON FORM LATHE COMPANY, a corporation of Ohio, having its principal place of business in Cleveland, Ohio, and GENERAL MOTORS CORPORATION, a corporation of Delaware, having a place of business at Detroit, Michigan, WITNESSETH That:

WHEREAS, The Gordon Form Lathe Company is the owner of inventions and Letters Patent (including United States Patent No. 1,542,803 on lathe granted to it June 16, 1925 as the assignee of Charles Gordon and Alfred W. Redlin) relating to the turning or finishing of regular or irregular shapes such as cams, crank cheeks and the like, and warrants that it has the right to make this agreement; and

WHEREAS, The Gordon Form Lathe Company has brought suits and threatened to bring suits against General Motors Corporation and others for infringement of said patent No. 1,542,803 and desires to effect a settlement of its claims against all such parties, and to convey to General Motors Corporation all its right under said patent and inventions with certain exceptions hereinafter defined;

THEREFORE, in consideration of the payment to it of one hundred ninety-five thousand dollars ($195,000.00) by General Motors Corporation, the receipt of which is acknowledged, The Gordon Form Lathe Company hereby

(1) Releases and agrees to release General Motors Corporation, a corporation of Delaware, its subsidiaries and nominees (with the specific and sole exception of Ford Motor Company) and its and their agents and customers and the users of its and their products from any and all liability and cause of action for which it and/or they might otherwise be accountable or subject by reason of the manufacture, use and/or sale, past, present and future, of the invention or inventions, machines, methods (and/or products thereof and articles made thereby) set

forth or disclosed in said patent and/or in any division, continuation or reissue thereof, and/or disclosed in any other United States patents and/or applications for patent and/or included in any invention now or hereafter owned or controlled by The Gordon Form Lathe Company which said patents or applications for patent or inventions relate in any way to the turning or forming of regular and/or irregular shapes; The Gordon Form Lathe Company also hereby grants the same parties a similar release with regard to any and all foreign patent rights which it may now have or hereafter obtain with respect to the said inventions or any of them.

(2) Grants General Motors Corporation the exclusive right and license, except as hereinafter indicated, to make, use and sell devices of every sort embodying and/or made by the several inventions or any of them, (and to practice the processes of the inventions) referred to heretofore in this instrument, with the exclusive right to sublicense any and all parties, except as hereinafter indicated. This license is for the world and shall run for the life of any and all patents involved, but it is expressly understood that all rights, past and future, heretofore held by The Gordon Form Lathe Company against the Ford Motor Company are specifically and solely reserved by The Gordon Form Lathe Company.

(3) Agrees to dismiss without prejudice the suit which it has brought against General Motors Corporation for infringement of patent No. 1,542,803, and agrees, upon demand of General Motors Corporation to dismiss without prejudice any suit or suits which it has heretofore brought against others for infringement of the said patent, each party in the event of such dismissal to bear its own costs.

(4) Assigns to General Motors Corporation, its subsidiaries, and/or its nominees the exclusive right to effect settlement and/or to bring suit at the expense of the as-

signees, based upon the patents, applications and inventions which are the subject matter of this license in its name against any and all infringers, past and future, (with the specific and sole exception of the Ford Motor Company) and/or persons, partnerships and corporations threatening to infringe, to obtain injunctions against such infringers and/or to collect damages or profits or royalty for such infringement.

(5) Agrees not to sell or assign any of the patents, applications or inventions which are the subject matter of this license to any one except to the group consisting of the General Motors Corporation, its subsidiaries and nominees.

(6) Agrees that it will maintain its corporate existence by payment of all taxes and other charges necessary so to do for the period of the life of any and all patents which are the subject matter of this license, or in the alternative that it will assign all the said patents, applications and inventions together with the right to collect for past infringement to the group consisting of the General Motors Corporation, its subsidiaries and nominees.

(7) Execute such additional instruments (and/or procure the execution by each and all other parties as may have an interest in the said inventions and/or patents and/or patent applications referred to above) as may be deemed necessary by General Motors Corporation, its subsidiaries and/or nominees to carry into effect the purposes of this settlement.

(8) General Motors Corporation on its part agrees to indemnify and hold harmless The Gordon Form Lathe Company against any and all claims and/or demands arising out or by virtue of contracts (copies attached hereto and made a part hereof) made by it with certain other parties, namely,

(a) J. I. Case Company agreement dated February 18, 1930,

(a') J. I. Case Company agreement dated February 18, 1930,

(b) The White Motor Company agreement dated February 6, 1930,

(b') The White Motor Company agreement dated December 21, 1929,

(c) The Nash Motors Company agreement dated March 1, 1930,

(d) Chrysler Corporation agreement dated July 17, 1929.

The Gordon Form Lathe Company hereby assigns to General Motors Corporation all its rights, past and future, under the aforesaid contracts with the J. I. Case Company, the White Motor Company, the Nash Motors Company and Chrysler Corporation; and warrants that it has not heretofore granted any license or release or effected any settlement under said patent No. 1,542,803 other than by way of the contracts enumerated in this section. Provided, however, that nothing herein shall affect the rights of The Gordon Form Lathe Company to retain all moneys heretofore collected by it under said contracts.

The Gordon Form Lathe Company warrants that it is the company which is a party to the agreements identified above in which it appears as Gordon Form Lathe Company.

(9) The Gordon Form Lathe Company expressly withholds from General Motors Corporation, its subsidiaries and/or nominees the right to sell or otherwise dispose of machines embodying the inventions of said patent to the Ford Motor Company and/or the right to grant a release for any such machines hitherto sold or otherwise disposed of to and/or used by the Ford Motor

Company and/or the right to grant a release for methods covered by said patent and hitherto used by the Ford Motor Company.

(10) The firm of Bottum, Hudnall, Lecher, McNamara and Michael of Milwaukee, Wisconsin, and the firm of Richey and Watts of Cleveland, Ohio, hereby consent to the foregoing agreement and said firms individually and jointly hereby assign and release to General Motors Corporation, its subsidiaries and nominees, all their rights and interest, past, present and future, in said Letters Patent No. 1,542,803 and any other letters patent, applications and/or inventions included within the foregoing agreement except their rights and interests with respect to the Ford Motor Company which they specifically reserve and retain.

The Gordon Form Lathe Company, Bottum, Hudnall, Lecher, McNamara and Michael and John W. Michael jointly, severally and personally warrant that The Gordon Form Lathe Company owns and controls the entire right, title and interest in, to and under said letters patent 1,542,803 except insofar as licenses have been granted to the concerns specified in section 8 (a) to (d) inclusive.

THE GORDON FORM LATHE COMPANY

By JOHN W. MICHAEL,
Attorney.

BOTTUM, HUDNALL, LECHER, McNAMARA AND MICHAEL

By JOHN W. MICHAEL,

RICHEY AND WATTS

By RICHEY & WATTS
FRANCIS O. RICHEY.

I, John W. Michael, warrant that I have full and complete power and authority to execute this agreement in the name of The Gordon Form Lathe Company and in the name of my firm, Bottum, Hudnall, Lecher, McNamara and Michael, and that there are no other parties except the firm of Richey and Watts and stockholders in The Gordon Form Lathe Company that have any interest in, or claim under, this settlement and that such stockholders have claims solely as stockholders of The Gordon Form Lathe Company.

JOHN W. MICHAEL.

I, Francis O. Richey, warrant that I have full and complete power and authority to execute this agreement in the name of my firm, Richey and Watts.

Witnesses
G. C. ARVEDSON,
L. M. SPENCER.

FRANCIS O. RICHEY.

Attest:
N. MERRILL,
Secretary.

GENERAL MOTORS CORPORATION
By O. S. HUNT.

L. M. SPENCER
JAS. MCEVOY

1558

Jan. 10, 1928. 1,655,655

H. W. MELLING

LATHE

Filed Oct. 13, 1920 4 Sheets-Sheet 1

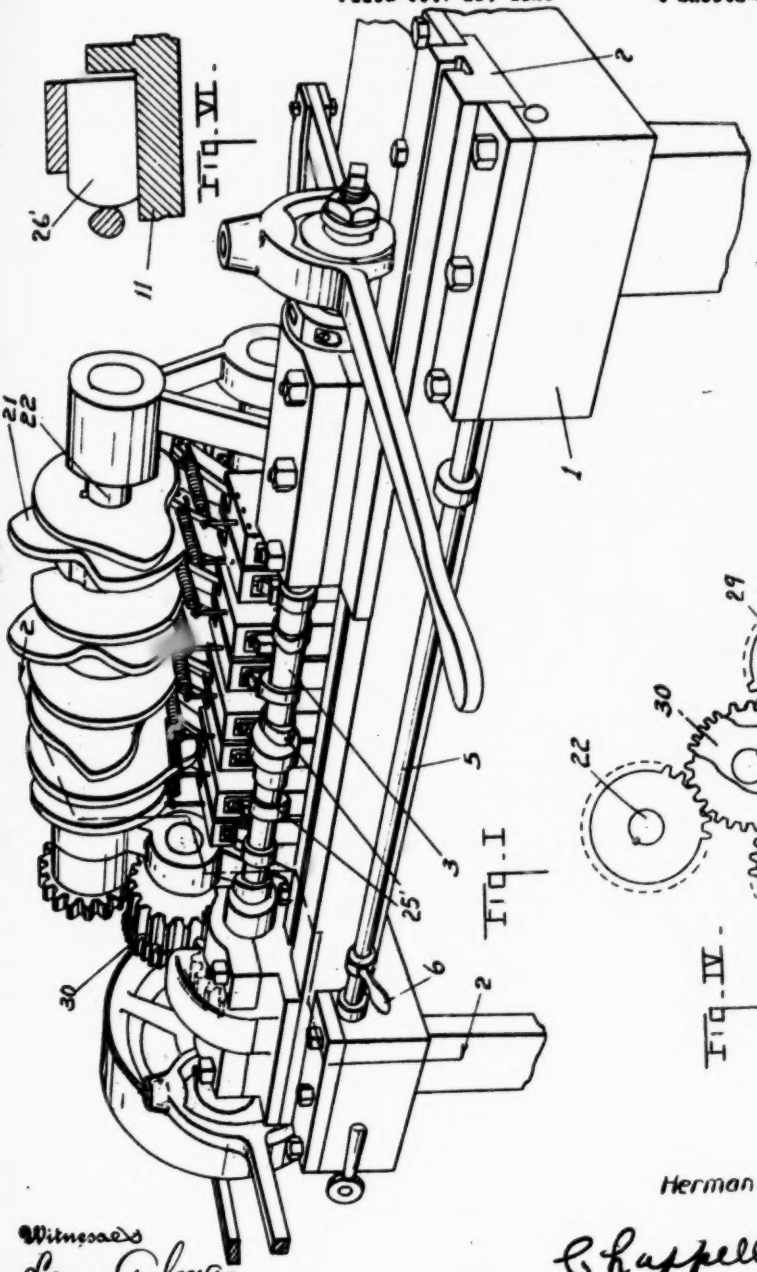

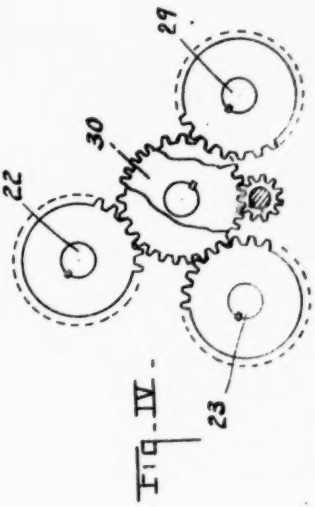

Inventor
Herman W. Melling

Witnesses
Leon Gilman
M. Louise Thurston

By Chappell & Earl
Attorneys

DEFENDANT'S EXHIBIT NO. 209

1558

DEFENDANT'S EXHIBIT NO. 209

1559

Jan. 10, 1928. 1,655,655

H. W. MELLING

LATHE

Filed Oct. 13, 1920 4 Sheets-Sheet 2

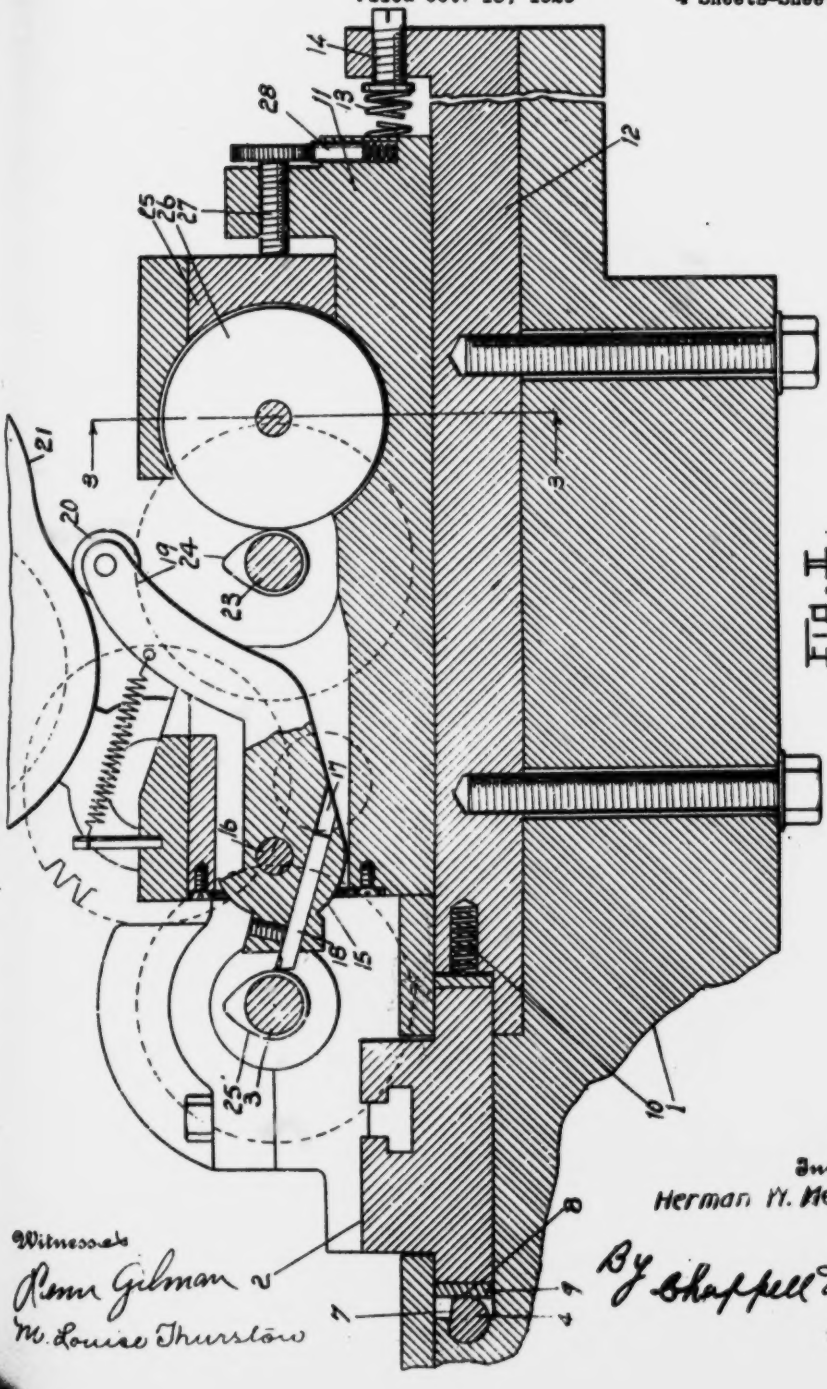

Fig. II.

Inventor
Herman W. Melling

Witnesses:
Rena Gilman
M. Louise Thurston

By Chappell & Earl
Attorneys

1550

Jan. 10, 1928.

1,655,655

H. W. MELLING

LATHE

Filed Oct. 13, 1920

4 Sheets-Sheet 3

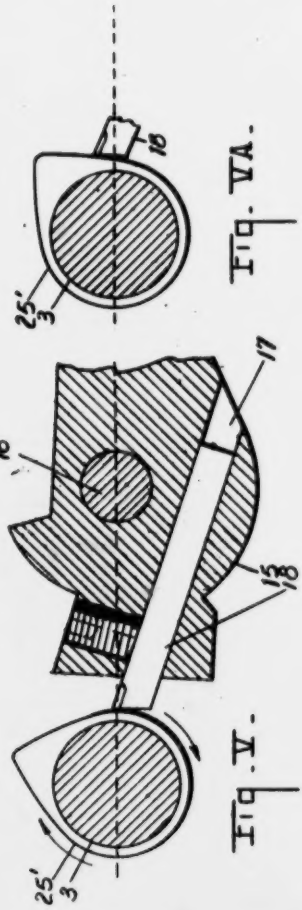

Fig. V A.

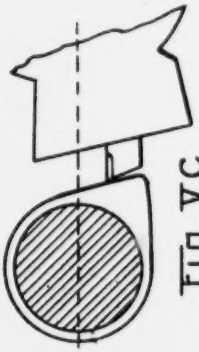

Fig. V C.

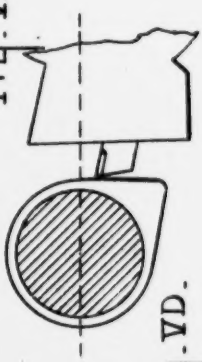

Fig. V D.

Fig. V.

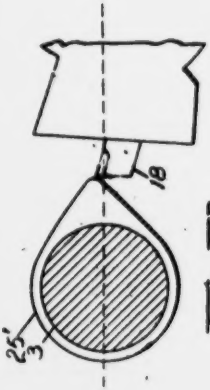

Fig. V B.

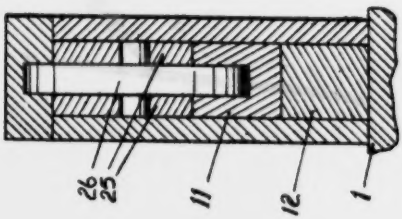

Fig. III.

Witnesses
Leon Gilman
M. Louise Thurston

Inventor
Herman W. Melling
By Chappell & Earl
Attorneys

Jan. 10, 1928. 1,655,655

H. W. MELLING

LATHE

Filed Oct. 13. 1920 4 Sheets-Sheet 4

Fig. VII.

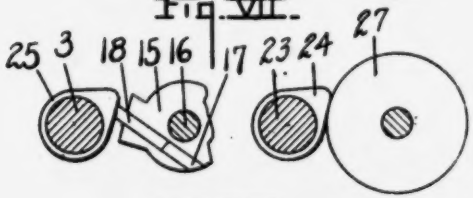

Fig. VIII.

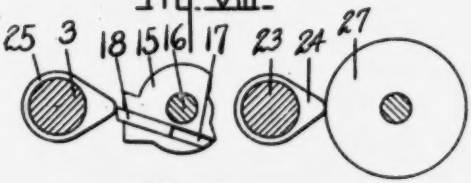

Fig. IX.

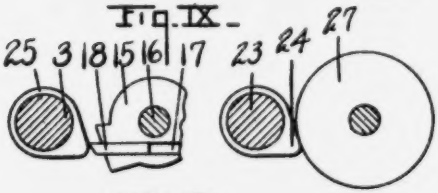

Fig. X.

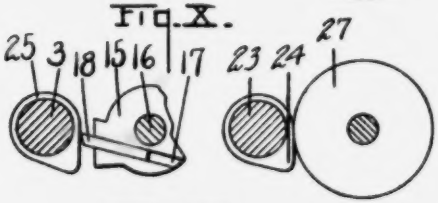

Fig. XI.

Inventor
Herman W. Melling

By Russell & Co

Attorneys

Patented Jan. 10, 1928. 1,655,655

UNITED STATES PATENT OFFICE.

HERMAN W. MELLING, OF JACKSON, MICHIGAN.

LATHE.

Application filed October 13, 1920. Serial No. 416,750.

This invention relates to improvements in lathes. The main objects of this invention are:

First, to provide an improved lathe for the manufacture of cam shafts.

Second, to provide an improved lathe for the manufacture of cam shafts by means of which cam shafts may be rapidly and accurately produced.

Third, to provide an improved lathe of the class described in which the cam shafts produced require but little finish grinding.

Fourth, to provide an improved cam forming machine in which the tool is automatically adjusted to maintain its proper relation to the work as the work is revolved.

Fifth, to provide an improved cam forming machine of large capacity.

Sixth, to provide an improved machine of the class described which is comparatively simple in its parts, very durable and not likely to get out of repair in use.

Further objects, and objects relating to structural details, will definitely appear from the detailed description to follow.

I accomplish the objects of my invention by the devices and means described in the following specification. The invention is clearly defined and pointed out in the claims.

A structure which is a preferred embodiment of my invention is clearly illustrated in the accompanying drawing forming a part of this specification, in which:

Fig. I is a front detail perspective view of a structure embodying features of my invention. Fig. II is a detail view, mainly in transverse vertical section on the line corresponding to line 2—2 of Fig. I, certain parts being shown in full lines for convenience in illustrating. Fig. III is a detail section on a line corresponding to line 3—3 of Fig. II. Fig. IV is a detail view of the driving connections for the work, and the pattern cam shaft and tool control shaft. Figs. V, V^A, V^B, V^C and V^D are enlarged detail views illustrating the relation of the tool to the work in several positions thereof.

Fig. VI is a detail section corresponding to Fig. II showing a modified form of carriage abutment or thrust member. Figs. VII, VIII, IX, X and XI are detail views illustrating the relative relation of the master cam to its abutment and the tool to the work in several positions thereof.

In the drawing similar reference characters refer to similar parts throughout the several views, and the sections are taken looking in the direction of the little arrows at the ends of the section lines.

Referring to the drawing the bed 1 is provided with a suitable way for the work carriage 2. The work carriage is provided with suitable chucks for the work 3 which in the structure illustrated is a valve cam shaft for an internal combustion engine. The structural details of the work carriage and its feed means and of the chucks are not illustrated as such details form no part of my present invention.

The work carriage is preferably supported for lateral adjustment to regulate the cut. (See Fig. II.) This adjustment is effected by means of the cams 4 upon rock shaft 5 extending across the front of the machine and provided with a hand piece 6. These cams have two faces 7 and 8 (See Fig. II) which coact with thrust plates 9 on the carriage. Springs 10 hold the carriage yieldingly forward. In operation the first cut is taken with the cam face 7 against the thrust plate, and the second or finishing cut is taken with the cam face 8 against the thrust plate which shifts the carriage laterally and holds it in position for the second cut without adjusting the tools.

For each cam to be cut on the cam shaft I provide a tool carriage 11 supported on a slide 12 for movement laterally of the work. The spring 13, the tension of which may be adjusted by means of the screw 14, holds or urges the tool carriage toward the work. The tool holder 15 is pivotally mounted at 16 and provided with a seat 17 for the tool 18. The tool holder is provided with an upwardly and rearwardly projecting arm 19 having a roller 20 travelling on the tool holder control cam 21. These cams 21 are mounted on shaft 22 disposed above the tool holder carriages, there being a control cam for each tool holder.

I provide a master or pattern cam shaft 23 having cams 24 thereon of the same shape as the cams 25' to be cut on the cam shaft 3. The cams 24 control the movement of the tool holder carriages 11, each carriage being provided with a thrust member 25 having thrust or abutment rollers 26 coacting with the cams 24. These thrust members are adjustably supported by means of the screws 27, detent 28 being provided for holding these screws in their adjusted positions.

The cam shafts 23 and the work spindle 29 are driven at the same speed by means of the driving gear 30. (See Fig. IV.) The master or pattern cams 24 which are replicas of the work control the movements of the tool carriages. It will be noted that the pivot axis of each tool on its holder is substantially spaced from its point so that the cutting edge of the tool swings in a substantial arc transversely to the travel of the tool carriage. This swinging of the tool on its pivot is an essential feature in reproducing the pattern or master cam. The cam 21 acting on the tool holder maintains the tool 18 in its proper relation to the work as the carriage is reciprocated and as the work revolves. This travel or swinging movement of the tool holder is illustrated in Figures V to V^{D} inclusive, and also in the Figures VII to X inclusive. To secure this result most efficiently, it is desirable that the radius of the thrust roller 26 should correspond to the radius of the tool. The tool is oscillated on its axis so that the point of engagement of its cutting edge with the work corresponds to the point of engagement of the master cam with its abutment.

It is understood that in order for tools of this type to cut most effectively, the tools must be presented to the work at approximately a proper cutting angle, and this results from the control or actuation of the carriage and tool as described.

In the preferred embodiment illustrated I provide the thrust rollers 26. In the modification illustrated in Fig. VI the thrust members 26' having curved surfaces corresponding to that of rollers are provided. The rollers, however, have the advantage of reducing friction and wear.

With the parts thus arranged I provide a structure by means of which cam shafts may be rapidly and accurately manufactured with a minimum of attention on the part of the operator.

The tools being properly presented to the work at all times the work comes from the machine in a manner requiring very little finish grinding. By the adjustment of the work carriage laterally a rough cut may be taken and the work carriage adjusted for a finish cut which is a further advantage in producing a substantially finished product.

Another advantage that the construction has is that the pattern cams are exact duplicates of the cams to be cut enabling the use of stock cams as patterns, and the tool holder control cams may be laid out by adjusting the tool holder to the various positions in which it would lie in relation to the work as illustrated in Figs. V to V^{D} inclusive.

It will be observed that the axes of the work, tool holder, the master cam and its abutment are in the same plane and in a plane parallel with the path of movement of the tool carriage. The radius of the abutment surface and the radius of the arc of the cutting edge of the tool are substantially the same. The tool holder is oscillated by means of its control cam so that the cutting edge of the tool with the work and the point of contact of the abutment with the master cam maintains the same relative relation, which results in the work being an exact duplicate of the master cam and also in maintaining the proper angle of the cutter relative to the work.

I have illustrated and described my improvements in an embodiment designed for the cutting of valve cam shafts in which all of the cams are of the same shape.

While my improvements are well adapted for a plurality of cams simultaneously they are also adapted for cutting single cams.

I have not attempted to illustrate or describe the various modifications and adaptations which I contemplate as I believe the disclosures made will enable those skilled in the arts to which my invention relates to embody or adapt same as may be desired.

Having thus described my invention which I claim as new and desire to secure by Letters Patent is:

1. In a cam shaft cutter, the combination of a work carriage, a plurality of tool carriages movable laterally of said work carriage, tool holders pivotally mounted on said tool carriages and provided with upwardly and rearwardly projecting arms, tools on said tool holders, a shaft provided with a plurality of master cams corresponding in shape to the work to be cut, springs urging said tool carriages toward the work, thrust members adjustably mounted on said tool carriages and provided with rollers coacting with said master cams, the radius of said rollers corresponding to the radius of the paths of the cutting edges of the tools, a cam shaft provided with plurality of tool control cams cooperating with said tool holder arms to swing the tool holders on their pivots for maintaining the position of the tools relative to the work as the work revolves, and means for driving the work and said master and tool control cams in synchronism.

2. In a cam shaft cutter, the combination of a work carriage, a plurality of tool carriages movable laterally of said work

riage, tool holders pivotally mounted on said tool carriages, tools on said tool holders, a shaft provided with a plurality of master cams corresponding in shape to the work to be cut, springs urging said tool carriages toward the work, thrust members on said tool carriages provided with abutment members having curved surfaces coacting with said cams, the radius of said abutment members corresponding to the radius of the paths of the cutting edges of the tools, a cam shaft provided with plurality of tool control cams cooperating with said tool holders to swing the tool holders on their pivots for maintaining the position of the tools relative to the work as the work revolves, and means for driving the work and said master and tool control cams in synchronism.

3. In a structure of the class described, the combination of a tool carriage, a tool holder pivotally mounted on said tool carriage, a tool on said tool holder, the axis of the tool pivot being substantially spaced from the point of the tool, so that the point of the tool swings in a substantial arc, a tool carriage control cam, which is a replica of the work to be cut, and a tool control cam cooperating with said tool holder for maintaining the position of the tool relative to the work as the work revolves.

4. In a cam shaft cutter, the combination of a work carriage, a tool carriage movable laterally of said work carriage, a tool holder pivotally mounted on said tool carriage, a cutter carried by said tool holder, a master cam corresponding in shape to the work to be cut, a thrust member on said tool carriage provided with a roller coacting with said master cam, the radius of said roller corresponding to the radius of the path of the cutting edge of the tool, and a tool control cam cooperating with said tool holder to swing the tool holder on its pivot for maintaining the position of the cutter relative to the work as the work revolves, the means for driving the work and said master and tool control cams in synchronism.

5. In a cam shaft cutter, the combination of a work carriage mounted for lateral adjustment for determining the depth of cut, a tool carriage movable laterally of said work carriage, a tool holder pivotally mounted on said tool carriage, a tool carried by said tool holder, a tool carriage control cam corresponding in shape to the work to be cut, and a tool control cam for said tool holder.

6. In a structure of the class described, the combination of a work holder, a tool carriage provided with an abutment, a master cam for controlling said carriage coacting with said abutment, a tool holder on said carriage movable in a plane transverse to the path of travel of the carriage, and means actuating said tool holder timed with the actuation of said carriage, so that the path of travel described by the point of the tool is a replica of that at the point of contact of the master cam and abutment.

7. In a structure of the class described, the combination of a rotary work holder, a tool carriage movable to and from the work in a plane transverse to the axis of the work, a tool holder mounted on said carriage, on a relatively fixed axis substantially spaced from the point of the tool and so that the tool swings in a plane transverse to the travel of the carriage, and means for actuating said carriage and oscillating said tool timed with the rotation of the work.

8. In a structure of the class described, the combination of a tool carriage, a tool mounted on said carriage for swinging movement on a relatively fixed pivot the axis of which is spaced from the point of the tool whereby the point of the tool swings in an arc transverse to the travel of the carriage, a pattern cam which is a replica in shape of the work to be cut for controlling said carriage, and means for swinging said tool whereby its cutting position relative to the work is maintained as the work revolves.

9. In a structure of the class described, the combination of a work carriage, a tool carriage reciprocating laterally of said work carriage, a tool holder pivotally mounted on said tool carriage, the pivot of the tool being substantially spaced from the point of the tool, a master cam which is a replica of the work to be cut for reciprocating said tool carriage, the axes of said master cam and tool holder being in the same plane, and a tool control cam for said tool holder whereby the position of the tool relative to the work is maintained as the work revolves.

10. In a structure of the class described, the combination of a work carriage, means for rotatably supporting the work on said work carriage, a tool carriage reciprocating laterally of said work carriage, a tool holder pivotally mounted on said work carriage, a tool carried thereby, a master cam corresponding to the shape of the work to be cut, an abutment roller coacting with said cam to reciprocate said carriage, the radius of the arc described by the cutting edge of the tool and that of the abutment roller being substantially the same, the axes of the work, tool holder, master cam and abutment roller being in the same plane, such plane being parallel to the plane of the path of the carriage, a cam for oscillating said tool holder on its pivot so that the cutting edge of the tool and the point of contact of the master cam and abutment roller are in the same plane which moves across the plane of said axes, and means for driving the work and the master cam at the same speed.

11. In a structure of the class described, the combination of a work carriage, means

1597

Purchase Order No. D 59795

Date 1/20/24

DELIVERY REQUIRED AT OUR PLANT

[illegible] Lathe Co
[illegible]son Mich

named party agrees to manufacture, sell and deliver materials specified below, subject to the terms and conditions stipulated:

SHIP VIA [illegible]ectric rt. from Jackson — 1 day from date of order

TERMS 2% 20th Prox. Net 60 days

F.O.B Corr Jackson Mich

QUANTITY	DESCRIPTION OF MATERIAL	PRICE
1 only	Welling cam turning lathe; with regular equipment and tooled to turn cams on T-410 camshaft; guaranteed to satisfactorily produce 45 camshafts per hour and to be placed in our plant on 60 days trial. Headstock spindle to have hand operated chuck. Hardened Master camshaft to be supplied by us. Arranged for chain motor drive, you to supply chain, sprockets and guard, we to supply motor only, you to mount same to machine.	
	each	$4150.00

2 L. 2/7
2 K 1/19/24
[illegible]

For operating above:

1 5 HP, 1150 R.P.M Westinghouse motor, type SK, frame 38, 220 volts, DC without pulley, slide rails or starter.
Dia. sheet attached

Direct to Jackson from Westinghouse on order D59796

Mark & Consign: MICHIGAN PLANT
Ford Motor Co
(for order D 59795)
Detroit Mich

ZAE E
716618
Acct 180-101
(ZWE) Purpose: T-410 camshaft, oper. 44, shape cams.

INVOICE AND RECEIVING RECORD							FOLLOW UP RECORD	
Material in Transit	Invoice Date	Amount Invoiced	Date Received	Receiving Slip Number	Amount Received	Total Received	Date	Remarks
							2/14	Old motor sent from Pitts 2/1. Advise delivery
							2/2	2/4 11:00 A.M. P 3/60 cy. 2/26 if motor arrives in time
		Rec'd N.O. 2/24/24					2/27	Mr Sleight 2/28 Cleveland truck
		Inv 35472						
		Rec'd 16 Finished Camshafts				3/6/24		
		15 Rough						
24								
		1						
								Purchase Order No. D 59795

DEFENDANT'S EXHIBIT NO. 217

1558

FORD FORM 2798

Ford Motor Company

HIGHLAND PARK, MICH.

This Order Number must appear on all Packing Slips, Bills of Lading, Machines, Packages and Invoices

(2nd COPY)
PRODUCTION DEPT.
FOLLOW-UP
ROUGE PLANT

The FORD MOTOR COMPANY, of Highland Park, Michigan, first party, hereby agrees to purchase and receive at its Rouge Plant, and

Walcott Lathe Company
Jackson, Mich.

Purchase Order No. B 13605

Date 1-17-24

DELIVERY REQUIRED 1-20-24

second party agrees to manufacture, sell and deliver materials specified below, subject to the terms and conditions stipulated:

SHIP VIA Elec. Frt. from Jackson

TERMS 2% 20th prox. net 60 days

F. O. B. Cars Jackson, Mich.

QUANTITY	DESCRIPTION OF MATERIAL	PRICE
1 only	Melling regular cam turning lathe, with regular equipment and tooled to turn cams on F-446 Ferdsen camshaft, guaranteed production 30 camshafts per hour; headstock spindle to have hand operated chuck; hardened master cam shaft to be supplied by us; arranged for chain motor drive, we to supply motor only, you to supply chain, sprockets and guard, and mount motor to machine.	ea. $4150.00
	For operating above:	
	One 5-HP 1150 RPM General Elec. Motor, Type RC, Frame 27A, 230 volts DC, without pulley, slide rails or starter. Dimension sheet attached. Direct to Jackson from General Elec. Co. on Order B-[illegible].	
	Mark and consign: ROUGE PLANT Ford Motor Company (for Order B-13605) Detroit, Mich.	
	Turning cams on Ferdsen camshaft F-446	

Exh. 218 1/19/39

ROUGE PLANT

SAR. Fs (AMW) 16440 Acct. 180-102 PS B-74521

INVOICE AND RECEIVING RECORD							FOLLOW UP RECORD	
	Material in Transit	Invoice Date	Amount Invoiced	Date Received	Receiving Slip Number	Amount Received	Total Received	Date	Remarks
								2/7	[illegible]
	Recd R 2/9/24								
	B.P. 30.00								
	also motor 5HP - [illegible]								
	[illegible] 2/21 [illegible]								
	[illegible] 29747								
	H								

Purchase Order No. B 13605

DEFENDANT'S EXHIBIT NO. 218

1559

FORD FORM — Company — (2nd COPY) FOLLOW-UP

HIGH... — PARK, MICH.

This Order Number must appear on all Packing Slips, Bills of Lading, Machines, Packages and Invoices.

The FORD MOTOR COMPANY, of Highland Park, Michigan, first party, hereby agrees to purchase and receive, and

Purchase Order No. D 65520

Walcott Lathe Co
Jackson Mich

Date 4-1-24
DELIVERY REQUIRED AT OUR PLANT
1924
3 April 1/3 3 per week thereafter.

...ond party agrees to manufacture, sell and deliver materials specified below, subject to the terms and conditions stipulated:

SHIP VIA Electric/From Jackson Mich
Freight
TERMS 2% 20th prox Net 60 days
F. O. B. Our Highland Park Plant.

Any amounts shipped in excess of the quantity specified will not be accepted.

QUANTITY	DESCRIPTION OF MATERIAL	PRICE
Fifteen (15)	Walling Cam Turning Lathe; with regular equipment and tooled to turn cams on T-410 Camshaft; guaranteed to satisfactorily produce 45 Camshafts per hour and to be placed in our Plant on 60 days trial. Head stock spindle to have hand operated chuck. Hardened Master Camshaft to be supplied by us. Arranged for chain motor drive, you to supply chain, sprockets and guard, we to supply motor and mount same to machine.	$6000.00
Eql. 2 19 1/19/39 Scrap	For operating above: Westinghouse (15) 5 HP, 1180 RPM Westinghouse Motor, type SK, frame 2S, 220 volts DC, without pulley, slide rails or starter. Dimension sheet submitted.	
MAR'ENW 19260 180-101 (ANW)	5/a 3h - Last @ machines lever mechanism for operating head & tailstock collets	
Motors reserved in H. P. Stock MAR from 3-31-24	Mark and consign: HIGHLAND PARK PLANT Ford Motor Co (For order D-65520) Detroit Mich	
	T-410 Camshaft oper 12 Shape Cams.	

INVOICE AND RECEIVING RECORD

Material Received	Invoice Date	Amount Invoiced	Date Received	Receiving Slip Number	Amount Received	Total Received
1	Rec'd HP 4/4/24 -			BP 36386		
1	"	"	4/9/24	BP 36452		
1	"	"	4/10/24	BP 36496		
1	"	"	4/15/24	BP 36552		
1	"	"	4/19/24	BP 36597		
1	"	"	4/19/24	BP 36648		
			4/24			
			4/24			
			4/24			
			4/24			
			4/24			
			4/24			
1	Rec'd HP 5/10 -					

FOLLOW UP RECORD

Date	Remarks
4/...	① Tomorrow
	Bal ② each 3 days
4/...	Urgent
4/19	Mr. Ford today - Cancel 3rd & 4th machines 4/19
	4th Tuesday 4/22
	Bal at same rate
5/3	H-
5/6	H ② per wk until finished
5/13	Urgent
5/24	Mr. ... 15th ... 29
	Purchase Order No. D 65520

DEFENDANT'S EXHIBIT NO. 219

1571

The FORD MOTOR COMPANY, of Highland Park, ... hereby agrees to purchase and receive at its Rouge Plant, and

Purchase Order No. B 19996

Date 4-24-24

DELIVERY REQUIRED

5-6-24

Bullock Lathe Company

Jackson, Mich.

second party agrees to manufacture, sell and deliver materials specified below, subject to the terms and conditions stipulated:

any amount shipped in excess of the quantity specified will not be accepted.

SHIP VIA Elec. frt. from Jackson

TERMS 2% 20th prox. Net 60 days

F. O. B. our Rouge Plant

QUANTITY	DESCRIPTION OF MATERIAL	PRICE
1 only	Milling Cam Turning Lathe; with regular equipment and toolen to turn cams on F-446, Tractor Camshaft. guaranteed to satisfactorily produce 30 camshafts per hour and to be placed in our plant on 60 days trial. Headstock spindle to have hand operated chuck; hardened master camshaft to be supplied by us; arranged for chain motor drive, you to supply chain, sprockets and guard, we to supply motor and mount same to machine.	each $4000.00

Eq. No. 220
1/19/29
Inst.

MOTOR FOR OPERATING:

One 5-H.P. Westinghouse Motor, 1150 R.P.M., Frame 22, Type SK, 220 volts, 60, without pulley, slide rails and starter. Dimension sheet attached.

Confirming order.

Mark and consign: ROUGE PLANT
Ford Motor Company
(for Order B-19996)
Detroit, Mich.

AAR: FW
17414
180-102
FB 3-11486
(AAR)

Motor reserved at Rouge Plant A.M. Jom. 4-19-24

Rough turn F-446, Tractor Camshaft

ROUGE PL

INVOICE AND RECEIVING RECORD								FOLLOW UP RECORD	
	Material in Transit	Invoice Date	Amount Invoiced	Date Received	Receiving Slip Number	Amount Received	Total Received	Date	Remarks
									May 1.
			Rec'd R 5/29/24					5/1	OK
								5/6	M Last of the month unless Cut-in on No order
			P.O. 37001					5/12	This will follow order 40330. the last mat which will ship 5/29
			OK 5/9 - 72					5/14	Ohare
								5/15	M. tomorrow by truck
									Purchase Order No. B 19996

DEFENDANT'S EXHIBIT NO. 220

The FORD MOTOR COMPANY, of Fordson, Michigan, first party, hereby agrees to purchase and receive, and

WALCOTT MACHINE CO
3-128 GENERAL MOTORS BLDG
DETROIT MICH

second party agrees to manufacture, sell and deliver materials specified herein, subject to the terms and conditions stipulated herein and on back hereof.

DATE OF ORDER 1-2-29

DELIVERY REQUIRED AT OUR PLANT

1 EACH 12-27-28
1-5-29

SHIP TO FORD MOTOR COMPANY

F. O. B. OUR PLANT

TERMS 2% 20TH PROX

ROUTING U S TRUCK FROM JACKSON MICH

QUANTITY	DESCRIPTION OF MATERIAL	PRICE
2 ONLY	LATHE MELLING CAM TURNING [illegible] REGULAR EQUIPMENT TO TURN CAMS ON A-[illegible] CAMSHAFT; WITH HARDENED AND GROUND STEEL TOOL HEADS; HEADSTOCK SPINDLE WITH HAND OPERATED CHUCK; HARDENED MASTER CAMSHAFT SUPPLIED BY US; ARRANGED FOR CHAIN MOTOR DRIVE, YOU TO SUPPLY CHAIN, SPROCKETS AND GUARD, WE TO SUPPLY MOTOR, YOU TO MOUNT TO MACHINE. FOR OPERATING ABOVE: (2) 5 HP, 1150 RPM WHSE MOTORS, FORD FRAME D-15, TYPE SK, FRAME [illegible], [illegible] VOLTS-[illegible], WITHOUT PULLEY, SLIDE RAILS OR STARTER. [illegible] MOTOR WILL BE SHIPPED TO JACKSON ON WHSE ORDER [illegible] STARTER RECEIVED [illegible] 12-[illegible]-28 [illegible], FORDSON MOTOR BLDG [illegible], CAMSHAFT, ROUGH TURN CAMS	EA $5950.00

Exh. 221
1/19/3[illegible]

Exp 4110

INVOICE AND RECEIVING RECORD								FOLLOW-UP RECORD	
[illegible]	[illegible]	[illegible]	[illegible]	[illegible]	[illegible]	[illegible]	[illegible]	Date	Remarks

2 Rec'd 1/3 - [illegible] 5-7-29
5-7-30

DEFENDANT'S EXHIBIT NO. 221

The FORD MOTOR COMPANY, of Fordson, Michigan, first party, hereby agrees to purchase and receive, and

WALCOTT MACHINE CO
2-1250 GENERAL MOTORS BLDG
DETROIT MICH

DATE OF ORDER 1-22-29

DELIVERY REQUIRED AT OUR PLANT
1 EACH DAY 1-29-29, 2-5-29
2-12-29, 2-17-29

SHIP TO FORD MOTOR COMPANY

F. O. B. OUR PLANT

TERMS 2% 20TH PROX

ROUTING M.C. TRUCK FROM JACKSON MICH.

QUANTITY	DESCRIPTION OF MATERIAL	PRICE
FOUR (4) ONLY	SEMI-AUTOMATIC CAM TURNING LATHE; REGULAR EQUIPMENT TO TURN CAMS ON A CAM, CAMSHAFT; WITH HARDENED AND GROUND STEEL TOOL BLOCK; HORIZONTAL SPINDLE WITH HAND OPERATED CHUCK; PURCHASED MOTOR CAMSHAFT SUPPLIED BY US; ARRANGED FOR 60~ 3 PHASE MOTOR DRIVE, YOU TO SUPPLY CHAIN, SPROCKETS, AND GUARD, WE TO SUPPLY MOTOR, YOU TO MOUNT TO MACHINE.	EA $5250.00

FOR OPERATIONS ABOVE:

(1) 1 HP 1150 RPM SQUIRREL CAGE MOTOR FORD FRAME D 15 TYPE SK FRAME 25 220 VOLTS 3 Ø WITHOUT PULLEY BLOCK [illegible] 60 CYCLE 3 Ø STARTER D36 SHEET ATT. NET

NOTE: WE TO SUPPLY, NO CHARGE, BE GUARANTEE, A GOOD PULLEY AND MOTOR FOR WEIGHT OF ABOVE, TO BE RETURNED TO US NO CHARGE WITH MACHINE ON THIS WEIGHT 2250#

1-8-29

1-18-29

Exp 4110

WALCOTT MACHINE MOTOR BLDG

4 CAMSHAFT 3RD OPN TURNING CAMS GRD'S ON ARBOR

INVOICE AND RECEIVING RECORD

1		9/26/29	-	18.53	190#		1/2	
"		9/20/29	-	"	5 7745	(1)	3/4	
"		3/29	—	"	5 7960		3/27	
"		4/9	—		5 5778			
Motor + Cl Steps (12) to come back							3/4	

Purchase Order Re...

Ø 3/4 Pl...

DEFENDANT'S EXHIBIT NO. 222

Dep. #232 JB 1-3/39

THE WHITE MOTOR COMPANY

DEPARTMENTAL CORRESPONDENCE

December 17, 1931.

SUBJECT:

Miss Noe file

Mr. T. R. Dahl
1211F.

Dear Sir:

Please find herewith a Release and Sub-License under the Gordon and Redlin patent No. 1,542,803.

Yours very truly,

RMCooper

R. M. Cooper
Patent Engineer

RMC:hb
Enc.

Check for $3,705.92 received 12/17/31 from Genl. Motors Corpn. representing dif. between $6,455.92 which we pd. to Gordon for a release under patent no. 1,542,803 & the amt. which we were required to contribute as a member of a group taking over the patent under the name of Genl. Motors. X-M

This Roll Call and 100,000 mile records are made by GOOD WORKMANSHIP

DEFENDANT'S EXHIBIT NO. 232

1575

THE WHITE MOTOR COMPANY

DEPARTMENTAL CORRESPONDENCE

RECEIVED S. G. CRILLY

JAN 30 1930

REF.

ANS.

January 29, 1930.

SUBJECT:

JAN 31 1930

JAN 31 1930

Mr. S. G. Crilly
Comptroller.

Dear Sir:

Please forward the writer a check for Six Thousand Four Hundred Fifty-five Dollars and Ninety-two cents ($6,455.92) made payable to the Gordon Form Lathe Company.

This check will be forwarded to the Gordon Form Lathe Company in consideration of the release of our two lathes Nos. 25[illegible] and 1912 from future infringement of United States Patent 1,542,[illegible], and in consideration of the release of The White Motor Company from any and all claims for past infringement of such patent.

Yours very truly,

RMCooper

R. M. Cooper
Patent Engineer.

1-31-30

White Roll Call and 100,000 mile records are made by GOOD WORKMANSHIP

DEFENDANT'S EXHIBIT NO. 233

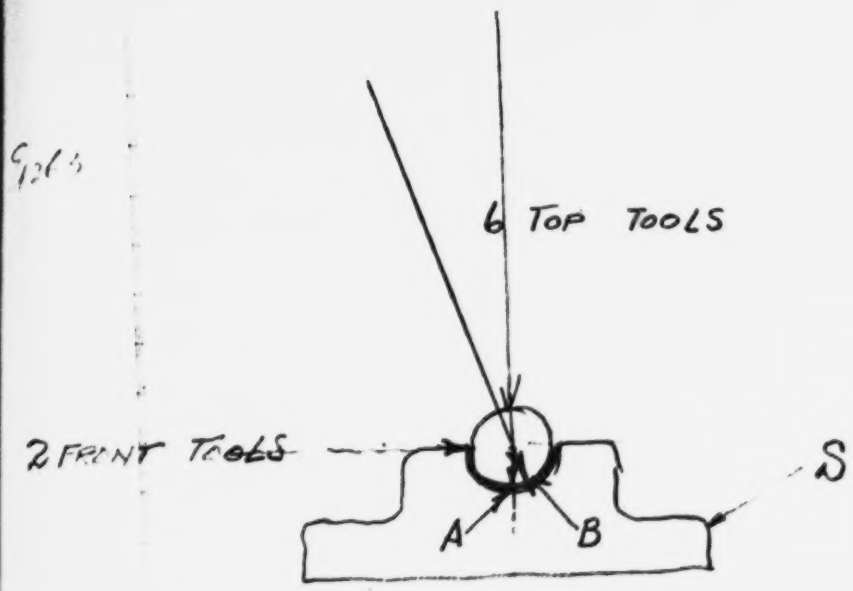
6 TOP TOOLS
2 FRONT TOOLS
S
A
B

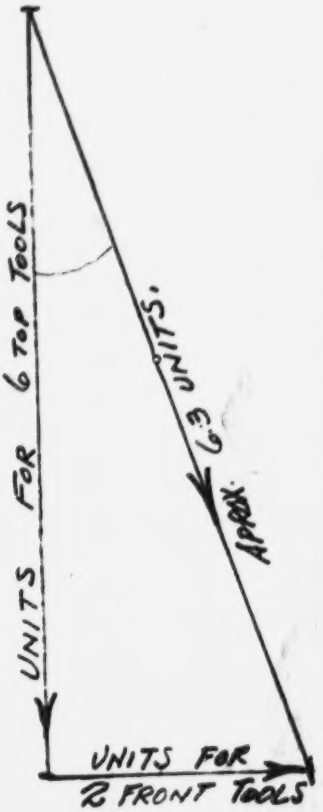
UNITS FOR 6 TOP TOOLS
APPROX. 6.3 UNITS
UNITS FOR
2 FRONT TOOLS

1582

Ex. 264 m

Ford Motor Company

NOV 3 1938 REC'D

FACTORY AND GENERAL OFFICES
3674 SCHAEFER ROAD
DEARBORN, MICH.

November 2, 1938

Bodman, Longley, Bogle, Middleton, & Farley
1400 Buhl Building
Detroit, Michigan

Att: Mr. Farley

Dear Sirs:

Per your request, we are giving below data of speeds and feeds on the Camshaft Shaper, based on information from you of 700 R.P.M. for Driving Pulley:

Driving Pulley runs @ 700 R.P.M.
Driven Gear = 13" Pitch Diameter
Driving Gear = 4-1/6" Pitch Diameter

Speed of Crank = $\frac{700 \times 4\text{-}1/6}{13}$ = 220 R.P.M.,

or 220 strokes per minute of slide.

Feed per stroke = 1/32.

Circumference of Model "T" Cam = approx. 2.9" ✓

1/32 feed per stroke gives $\frac{2.9}{1/32}$ = 92.8,

or 93 strokes for total rotation of cam.

Total cutting time per shaft = $\frac{60 \times 92.8}{220}$ = 25.3 seconds. 50.

Circumference of Model "A" Cam = approx. 3.3" ✓

1/32 feed per stroke gives $\frac{33}{1/32}$ = 105.6,

or 106 strokes for total rotation of cam.

Total cutting time for cam = $\frac{60 \times 106}{220}$ = 29 seconds.

Surface speed of tool:

220 strokes per minute
Cutting stroke 240°, Return stroke 120°, of revolution
Distance of stroke = 1-1/4"
Surface speed of tool = $\frac{220 \times 1\frac{1}{4} \times 3}{2 \times 12}$ = 34 ft. per min. average.

Very truly yours
FORD MOTOR COMPANY

WM F PIOCH
Mechanical Design Dept.

WFP:NB:JEK

DEFENDANT'S EXHIBIT NO. 264

$\frac{1}{4} \times \frac{3}{2} = .375$

$2 \times \frac{3}{2} = 3.000$

$.375$

2.625

Center Bearing

~~1.5x~~ ← 1/4" use on length of bearing

$175x = 3$

$x = .75$

3.000

175

1250

1225

250

175

750

700

1.714

Exh. 266

1/28/39

[illegible]

[illegible]

[illegible]

DEFENDANT'S EXHIBIT NO. 266

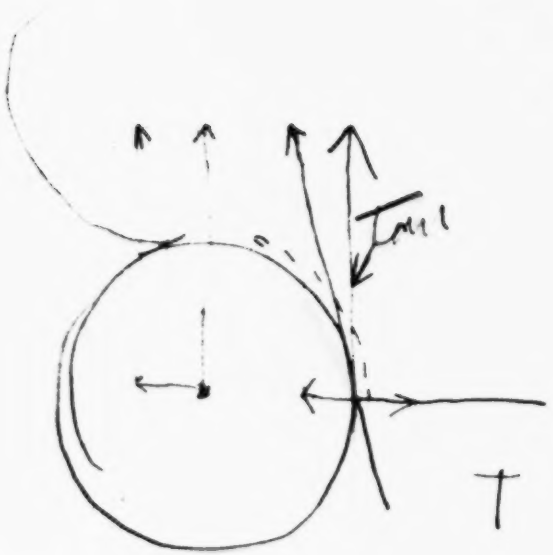

272
FB
1/30/39

1586

DEFENDANT'S EXHIBIT NO. 272

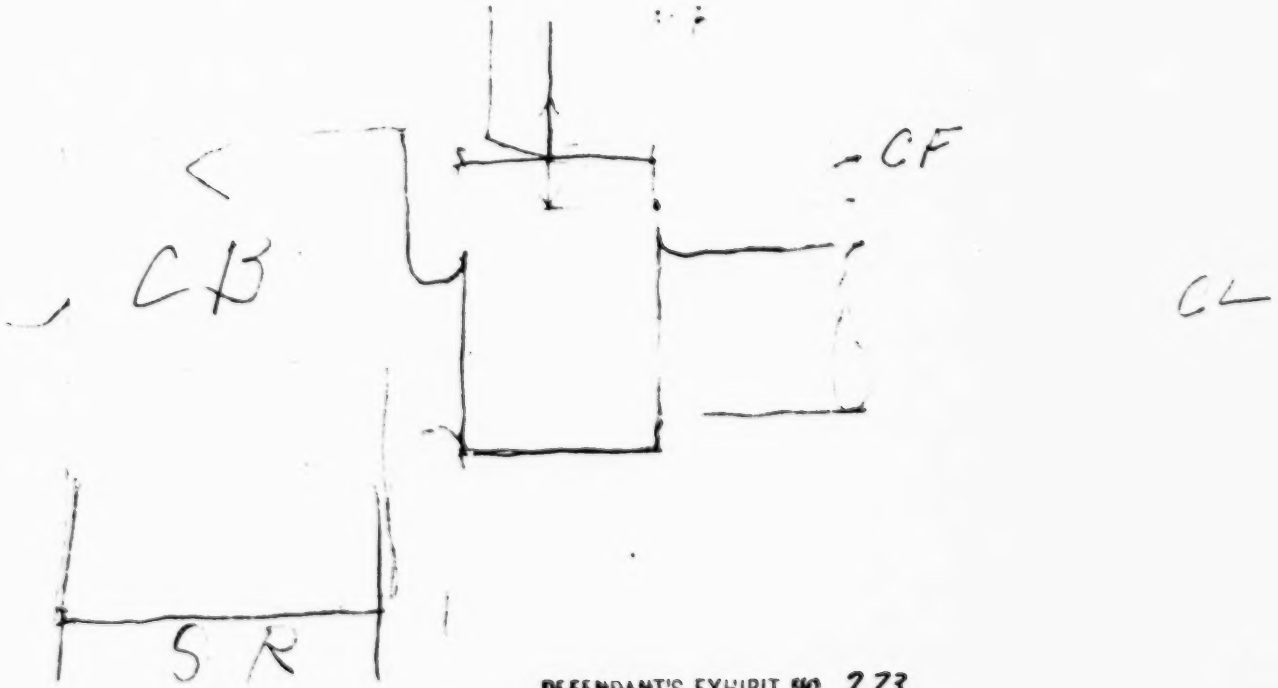

DEFENDANT'S EXHIBIT NO. 273

DEFENDANT'S EXHIBIT NO. 276

Exh. 281.
11/31/39.

CAM SHAFT

(One used in T-5949 Assy.)

DEPT — T-410

4210	1.	Cut to length	.2400	
	2.	Heat and upset collar	.9600	
	3.	Heat and Forge (Hammer)	.8000	
	4.	Trim	.4000	
13	5.	Anneal		
	6.	Tumble		
410	7.	Center both ends	.286	
	8.	Rough Straighten	.614	
	9.	Rough turn center bearing	.578	
	10.	Turn between cams	.578	
	11.	Straddle face flange and nick center front bearing and stamp "FORD"	.614	
	12.	Rough turn gear post and nick center bearing	.571	
	13.	Drill letter "L" hole in flange	.286	
	14.	Rough turn two end bearings	.534	
	15.	Straighten	.571	
	16.	Rough grind center bearing	.357	
	17.	Turn cam lathe	.510	
	18.	Heat and quench in straightening Machine	.700	
	19.	Polish one cam for selerscope	.180	
	20.	Second re-straighten	.178	
	21.	Grind recess at end of front bearing	.318	
	22.	Finish grind center bearing	.583	
	23.	Rough grind inside flange	.583	
	24.	Finish grind front bearings	.927	
	25.	Finish grind rear bearings	1.080	
	26.	Inspect for line bearing (Dept. 410)	.32	
	27.	Facing flange and cut gear post and comm. post to length.	.616	
	28.	Finish turn gear post comm. post and Chamfer	.616	
	29.	Drill letter "H" holes. .302" in flange and ream two 5/16" holes in flange	.361	
	30.	Inspect dowel pin holes (Dept. 410)	.63	
	31.	Burr two 5/16" holes in flange	.143	
	32.	Drill one 1/8" hole in comm. post	.208	
	33.	Burr one 1/8" hole in comm. post and burr one hole in face of flange	.143	
	34.	Burr inside of "H" hole	.143	
	35.	Grind burr from flange and chamfer commutator post	.238	
	36.	Threading 9/16" -18 thread on commutator post	.168	
	37.	Thread 13/16 thread on gear post	.238	
	38.	Finish grind cams	2.969	
	39.	Time	1.955	
	40.	Chamfer #1 Cam	.168	
	41.	Remove burrs from cams	.143	
	42.	Straighten center bearing	.178	

DEFENDANT'S EXHIBIT NO. 281

T-410

43.	Finish straighten	.178
44.	Finish grind outside face of flange	.238
45.	Re-grind front recess	.180
46.	Re-grind center bearing in Assy.	
47.	Polish Minor Cam	.275
48.	Wash	.143
49.	Polish all bearings	.238
50.	Hand on conveyor	.119
		23.051

NOTE: Operations #1 to 6 Incl. Added.

When making any changes notify Prod. Dept. 4371.

Written 12-21-25.
Revised 3-22-26
Revised 11-10-26
Revised 12-21-27
Revised 12-21-27

EF-cm

Card #1.

RECORD OF CHANGES

NAME OF PART Cam Shaft.

[illegible] position between the exhaust and inlet cam was [illegible] – this has been changed to 111°, to conform [illegible] Wagner's sample shaft.	Howard.
[illegible] 1/64" finish to front end of first cam, and put 1/8" [illegible] dist on machine drawing.	Howard.
[illegible] chamber to extend 1-3/64" from flange, on account [illegible] change which calls for threading full length of [illegible]	Howard.
[illegible] Limits at point marked "A" from .6850 to .670. .6860 .675	Howard.
[illegible] over all length from 22-25/32" to 22-23/32" by [illegible] the extreme end of shaft which is at point marked [illegible] this distance being changed from the first step to [illegible] end of shaft from 1-11/64" to 1-13/64"; also specified [illegible] from on each end of shaft.	Howard.

(OVER)

11-14-12 #860 -2	Changed angle between the inlet and exhaust cams from 111° to 115° - 45'. This change should be made as quickly as possible because owing to the variation of the cam shafts as they are now coming, we often do not have sufficient stock for finish.	289-2 Calamb.
12-5-12 #879	We have added note specifying the parting line for this forging to be normal to center lines fo exhaust cams #1 and #4. Noted Received from GVH stated:- "To help us convince the forging companies of the fact that there is enough metal in the 1913 cam shaft (when correct) for making the 1913 camshaft, we are sending you a special sketch showing that the greatest difference between the 1912 and 1913 forging - only 1/64".	Calamb.
12-19-12 #886 -2	Have changed note specifying that the dies for this forging shall be parted on the centerline of inlet cams #2 and #3 instead of on the center line of exhaust cams #2 and #3. Have made this change in the drawing because all the different forging companies who ar making these camshafts prefer to part their dies on the centerline of inlet cams#2 and #3.	Calamb.
2-27-13 #910 -2	Have added note specifying that holes for cam gear dowel pins be located from inlet cam #1.	Martin

DEFENDANT'S EXHIBIT NO. 289

FORGING DRAWING. 289-3 Card No.

SYMBOL NO. (E) T-410

RECORD OF CHANGES

DATE OF REC.	NAME OF PART 1 CAM SHAFT.	
1-9-14 [illegible] -1	Changed diameter of shaft between rear end, and exhaust cam #4; between exhaust cams #2 and #3; also between flange on front end and exhaust cam #1 from 13/16" to 27/32".	Calamb.
	Changed length of 7/8" shoulder between flange and front end of shaft from 25/32" to 3/4" and the distance between flange and the front end of 3/4" shoulder at front end of shaft from 1-5/64" to 1-5/64". This changes the distance between front end of cam shaft and the end of 3/4" shoulder from 1-13/64" to 1-13/64".	Dagner.
	Changed thickness of flange at front end from 5/16" to 11/32" changing the distance between the rear side of flange and the center line of exhaust cam #1, from 2-3/8" and the front end of exhaust cam #1 from 1-7/8" to 1-55/64", and the distance between the front side of flange and front end to 7/8" shoulder from 3/4" to 25/32", also the front end of 3/4" shoulder from 1-5/64" to 1-1/16". Between the bottom of crown at front end of cam shaft from 2-3/32" to 2-17/64". These changes will take effect when the dies are resunk.	Dagner.
	(Cont)	

		289-4
10-9-15 #857 -6	Have specified the symbol number and forging company's trademark to be added at the point indicated by note and arrow. Changes to be incorporated in all new dies which are being made, and in all old dies when they are resunk.	Calamb.
1-18-16 #878 -1	Changed diameter for base of cams from 7/8" to 57/64". This change is to take effect in all dies which are being made/ and in all old dies when they are resunk.	Diehl.
2-23-16 #881 -4	Changed distance between bottom of crown at end of shaft and end of 3/4" shoulder from 1-13/64" to 1ell/64", and distance between end of 3/4" shoulder and flange from 1-1/16" to 1-3 /32". This change is to take effect in all new dies which are being made, and in all old dies when they are resunk. All forgings on hand to be used up.	Diehl.
12-24-16 #980 -9	Steel for this part is to be hot rolled. Specified use on 1917 cars.	Calamb.
2-2-17 #941 -2	Removed note which specified symbol number and trademark to be placed between inler cams #1 and #2. Looking from rear end of shaft we have specified the flange to be flattened 3/8" wide on left hand side of center line for inlet cams #2 and #3, specifying trademark to be placed on this flat. This means that symbol number will be omitted form forgings. This	
	cont'd card #8.	

FORGING DRAWING. 289-5 Card #5.

SYMBOL NO. T-410 (Z)

RECORD OF CHANGES

NO. OF REQ.	1 NAME OF PART CAM SHAFT.	
5-6-17 #641 -2 cont'd	change was made because when symbol number and trademark are placed on side of shaft between inlet cams #1 and #2, they are both machined off and while we do not require the symbol number to be placed on the forging, we do require the trademark in order to know where defective forgings are made. This change is to take effect when dies are resunk. All forgings on hand to be used up.	Wagener.
4-9-17 #650	Specified this part for use on Model H truck, 1917.	Galamb.
9-4-17 #676	Specified for use on 1918 cars.	Galamb.
12-16-18 #712-926	Changed type of steel from "H" to "O". This change is to take effect at once, forgings on hand to be used up.	Galamb, Wanderese Martin.
1-16-19 #716-1015	Changed diameter of cams at base from 57/64" to 57/64" 59/64". This change to take effect when dies are resunk, forgings on hand to be used up.	Degener.

(OVER)

289-6

3-3-19 #726-1518	Removed dimension specifying the length of flat surface on the edge of flange to be 3/8" and added dimension specifying the distance between the flat surface and the edge of flange ro be 1/8" also specified the trademark to be placed close to one end of the flat surface.	Degener.
5-6-19 #773-1767	Specified stock to be bought as follows: .990 x 130 one bar equals 28.95 lbs., 5 shafts per bar. 1.010" 130-1/2" Shorter lengths will be accepted provided they come in multiples of 26".	Findlater.
7-18-19 #786-2305	Brought drawing up to date with the forgings as they are being made by outside companies, by changing the diameter of shaft between all the cams, except #2 and #5 exhaust from 23/32" to 15/16". Change to take effect at once.	Degener.
12-5-19 #794-3088	Specified dies to be parted on a line 12° 45' from the centerline of exhaust cams #1 and #4 instead of on the centerline of inlet cams #2 and #3, also specified the flange to be flattened on the right side of parting line instead of on the left side. These changes were made for convenience in forging and are to take effect when dies are resunk. Change to be incorporated in dies which are not in use. Specified use for 1920 cars.	Rouse.

FORGING DRAWING. 289-7 Card #4.

SYMBOL NO. T-41C (W)

RECORD OF CHANGES

NO. OF REQ.	1 NAME OF PART CAM SHAFT.	
12-13-19 #776-3097	We have specified the flange to be flattened on the L.H. side of parting line instead of R.H. side.	Thrall.
2-9-20 #784-3401	Removed stock specifications as follows: Stock .990" D x 130" ; 1 bar equals 28.95 lbs., 5 sahfts 1.010 130-1/2 per bar, shorter lengths will be accepted provided they come in multoples of 26".	Findlater.
5-7-20 #796-3894	Changed material from Hot Rolled Steel, type "G" to Hot rolled type "E" Selected Steel of the following analysis:- Carbon .32 - .37; Manganese .70 - .85; Phosphorus .04 max; Sulphur .05 max; Silicon .07 - .15 (Wandersee) The above change in the type of steel is to be made as soon as possible without holding up production ; Type "G" Forgings on hand to be used up.	

10-12-20 FOR 1921 289-8

024

5093-830 12-20-20	Changed diameter of shoulder for large time gear from 7/8" to 29/32" for convenience in machining. This change is to take effect as soon as possible without holding up production, and is to be incorporated at once in dies not in use, and new dies which are being made. Forgings on hand to be used up.	Galamb
2-27-22 7482	Changed type of steel from "E" selected TO Type "EE", also added specification for stock used by FORD MOTOR COMPANY as follows, 1" diameter X 13 feet, 5865 lbs required per 1000 Forgings, shorter lengths in multiples of 26", shortest length 104".	Findlater & Wandersee

7-13 1923 FOR 1.22 23

9791

5-11-24 10804	Added 3/16" to front end of exhaust cam #1, changing the length from 15/16" to 1-1/8" & distance between cam & flange from 1-55/64" to 1-43/64".	Galamb

SYMBOL NO. T-410 — FORGING DRAWING 289-9 — CIRD #5

RECORD OF CHANGES

NO. OF REQ. 1	NAME OF PART Cam Shaft	
4-7-24 10964	Changed length of stock from 13 feet to 153"plus or minus 0. number of pounds required per 1000 forgings from 5865 to 5667, multiples from 26" to 25-1/2" & shortest length from 104" to 102" plus or minus 0.	Findlater
1-7-25 12436	SPECIFIED FOR 1925	
5-8-25 13043	Removed flat spot and trade mark from edge of flange.	Findlater
5-18-26 17485	Changed size of stock from 1" diameter x 153 ± 0, 5.667 lbs., req. per 1.000 forgings, shorter length in multiples of 25-1/2, shortest length 102 ± 0. - 2C- 1" dia. x 144-1/4, 5.340 lbs. req. per 1.000 forgings, shorter lengths in multiples of 24 + 1/4, shortest length 96-1/4.	Lesko
7-16-26 18129	Changed length of bar stock from 144-1/4" to 240-1/4"	Galamb.
10-21-26 19043	Changed weight of stock required per 1.000 forgings as follows: From 5340 to 5312.5 lbs. and specified for 1927.	289-10 Witzig.

1596

[illegible] PONTIAC DRAWING. 290-1 Card #1.

RECORD OF CHANGES

[illegible]	NAME OF PART CAM [illegible]	#290 [illegible]
[illegible]	[illegible]	
[illegible]	[illegible] tive position between the exhaust and inlet cam was [illegible] 109° - this has been changed to 111°, to conform [illegible] Dagmar's sample shaft.	Howard.
[illegible]	[illegible] limit on the gear end from .8115 to .8125. Also .8119 .8135 [illegible] the grinding at the point marked "A".	Galamb.
[illegible]	[illegible] 1/16" [illegible] to front end of first cam, and put 1/8" [illegible] on machine drawing.	Howard.
[illegible]	[illegible] 1/16" ream to .8115 and .8125 ream.	[illegible]
[illegible]	[illegible] of cam gear dowel pin hole from .8115 to .8120 .8125 .8125	[illegible]
[illegible]	[illegible] the diameter of groove, located next to exhaust Cam [illegible] .7[illegible] to .734 .737.	Howard.
[illegible]	[illegible] diam., thread on commutator end, change from 29/32" [illegible] to 3/16".	Howard.
[illegible]	[illegible] limits at point marked "A" from .6860 to .670 .6860 .675. (OVER)	Howard.

12-6-11 #63	Increased length of Shaft, on threaded portion, from face of flange to outer end of shaft, 1/16", changing the dimension from 2-1/4" to 2-5/16. We have also shown the 1/16 crown, on end. Also changed length of thread, on threaded portion, from end of shoulder to end of thread, from 43/64 to 13/16, to facilitate the drilling of this hole, which is 1/8" drill. By adding 1/16 to the end of shaft, the over all length was changed from 22-21/32 to 22-23/32.	290-2 Howard.
5-1-12 #290 -3	Specified that the rear side of flange for cam gear and the front end of the exhaust cam #1 be ground.	Galamb.
[illegible] #304	Called for centers in the ends, centers to be made with a letter C center drill.	Martin.
6-11-12 #[illegible]	Redesigned, bringing the shape of cams up to date with the change on T-[illegible]; also changing the angle between the exhaust and inlet cams from 111° to 113° 25'. This change to take place on 1913 cars. If however there are any cam shafts of our present design left over, they are to be used up before staring on the new. Forging drawing will not be affected by this change.	Galamb.
8-9-12 #335 -1	Changed angle between center lines of exhaust and inlet cams from 113° 25' to 115° 21-1/2'.	Galamb.
9-21-12 #351	Changed diameter for base cams from .8125 to .812 .8130 .813.	Galamb.

DEFENDANT'S EXHIBIT NO. 290

SYMBOL NO. T-410 (2) FINISH SIZE. 290-3 Card #2

RECORD OF CHANGES

NO. OF REQ.	NAME OF PART CAM SHAFT	
11-9-12 #367 -2	Changed angle between center lines of Inlet & Exhaust Cams from 115° - 21-1/2' to 115° - 45'.	Howard.
3-4-13 #404 -2	Brought drawing up to date with the camshafts as they are being made by specifying that the center lines through dowel pin holes and exhaust cams #1 and #4 be at an angle of 1° 30' instead of coinciding with each other. Also changed the angles between the inlet and exhaust cams from 115c - 45' to 115° - 50'.	Galamb.
3-27-13 #410 -3	Have specified the center line through cam gear dowel pin holes to be located 114° - 30' from centerline of inlet cam #1 instead of 1° - 30' from the centerline of exhaust cam #1. This change was made for convenience in machining only, that is, owing to the variations in the forgings the holes can be more accurately located from inlet cam #1 than they can from exhaust cam #1. The location of the holes remains unchanged.	Martin.
3-14-14 #475 -3	Changed thickness of flange from 1/4" to .248 .252	Galamb.
3-19-14 #476 -2	Changed distance between flange on front end and bottom of shoulder for commutator head, from 1-3/32" to 1.090 1.100 (OVER)	Galamb.

290-4

4-4-14 #479 -3	Changed size of center drills in ends from letter C to letter F.	Banta.
1-23-15 #532 -6	Changed diameter of shoulder for cam gear from .8126" to .8135" .812" Specified the ground shoulders for cam shaft bearing, .813" center and rear, to be connected with the cams at ends with 1/32" radius. 1/32"	Galamb & Degener.
12-21-15 #568 -1	Called for a 45 degree bevel 3/64" wide at end of 13/16" threaded shoulder, for cam gear lock nut. This bevel was added to eliminate the feather edges at end of threads which become easily distored and cause trouble when assembling lock nut. Changed specifications for 13/16" x 16 threads from UBS to UBT, and the 9/16" x 18 threads from UBS to SAE. Specified this shaft to be used on 1916 cars. Above change in specifications for threads does not imply any change in shape but merely in method of specifying them.	Galamb.
3-7-16 #584 -1	Changed width of bevel at end of 13/16" threaded shoulder from 1/32" to 1/16". Removed groom from front end of shaft and 1/64" and called for a 45° bevel, 1/32" wide. The above mentioned bevels were added in order to eliminate feather edge of end of threads, which makes trouble when assembling cam gear lock nut and commutator head nut, and is to take immediate effect, all shafts on hand to be used up.	Howard.

SYMBOL NO. T-410 (E) FINISH SIZE. 290-5 Card #3

RECORD OF CHANGES B

NO. OF REQ. 1 NAME OF PART CAM SHAFT

5-19-16 #595 -1	We have specified the name Ford to be stamped in position indicated by note and arrow.	Banta.
1-11-17 #633 -2	Specified hole for commutator head rivet to be drilled only 5/16" deep, instead of clear thru the shaft, and called for countersink 1/32" deep in top of hole. Brought drawing up to date by specifying the steel of which this shaft is made to be hot rolled. Specified use on 1917 cars.	Banta.
2-8-17 #638 -4	Looking at view showing front end of cam shaft, we have specified hole for commutator head pin to be below instead of above horizontal center line, the angle between center line of pin hole, and horizontal center line of shaft to remain 40°.	Banta.
4-9-17 #650	Specified this part for use on model H truck, 1917.	Galamb.
9-4-17 #676	Specified use on 1918 cars.	Galamb.

over

290-6

11-30-17 #686-866	Brought drawing up to date by specifying front end of holes for time gear dowel pins to have a 45° bevel, 1/64" wide. This bevel was added to prevent pin from shearing small bits of metal off the edge of hole and forcing same into T-411, cam shaft bearing, front.	Perini.
3-5-18 #699-860	Called for a 45° bevel 1/64" wide on the front edge of flange at front end.	Degener.
12-16-18 #718 -924	Changed type of steel from "H" to "G". This change to take effect at once; forgings on hand to be used up.	Galamb, Wandersee & Martin.
6-18-19 #744-2016	Added note specifying the 13/16" x 16 USF, Threads next to flange at front end, to be Milled and that angle between centerline of threads and face of flange to be 90 deg. plus or minus 0.	Galamb.
6-26-19 #748-2088	Brought up to date by specifying these shafts to be Cooper plated .0015" thick before grinding.	P.E.Martin.
7-30-19 #755-2206	Brought drawing up to date as follows: Added letter "L" hole in flange to be used for driving shaft while machining.	Degener.

SYMBOL NO. T-410 (Z) FINISH SIZE. 290-7 Card #4. B

RECORD OF CHANGES

NO. OF REQ. 1 NAME OF PART CAM SHAFT

11-7-19 #769-2365	Removed 1/32 fillets at the ends of center bearing and called for relief grooves 1/8 wide. .734 diameter at the bottom this .737 being the same size as the grooves in the front bearing. This change was made because the fillets have a tendency to spread the bearing when assembling cam shaft to cylinder and is to take effect at once. Grooves to be added to cam shafts on hand if necessary.	Bendict
12-3-19 #766-3111	Brought up to date with the above mentioned change in forging drawing. Specified for use on 1920 cars. Note: These changes were made for convenience in forging.	Rouse
12-13-19 #776-3097	Brought up to date with the above mentioned change in forging drawing also with shafts as they are being machined in shop by specifying the letter "L" hole (for driving while machining) in flange to be located on the R.H. side instead of L.H. side of vertical centerline. (See rear view)	Thrall.
1-19-20 #781-3294	Brought drawing up to date as follows: Changed diameter of bearings from .7488 to .747. Changed diameter of turned part .7491 .749 of shaft between cams from 3/4" to .745. Changed diameter .755	

290-8

	of shoulder which carries time gear from .812 to .810. .813 .813 Changed diameter of shoulder in front of threads for time gear lock nut from .670 to .665. Changed diameter of .675 .675 shoulder which carries commutator head from .5610 to .559 .5615 .561 Changed thickness of flange which supports time gear from .248 to .233. Changed distance between flange and exhaust .253 .238 cam #1 from 1.967 to 1.967. Changed diameter at base of 1.965 1.970 cams from .812 to .805. .813 .813	Galamb
1-30-20. #782-3337	Changed the width of chamfer on flange which supports time gear from 1/64 to 1/32. This change was made to be sure the burr is removed from flange before assembling time gear in place, and is to take effect at once. Shafts on hand to be used up.	Galamb.
3-9-20. #788-3570	Specified the corners at front end of exhaust cam #1 to be rounded with a 1/64" radius. This change is being made to eliminate sharp corner on the front end of cam, which acts as a cutter on the end of Cam Shaft Bearing Front.	

cont'd card #5

[illegible] No. T-410 [illegible]

RECORD OF CHANGES

NO. OF REQ.	NAME OF PART [illegible]
	cont'd card #5 Also specified the name "Ford" to be [illegible] inlet and exhaust cams #2, instead of [illegible] #3 and #4; this change being made in order [illegible] name "Ford" where it will not be [illegible] holds shafts while they are being tempered. These changes are to take effect at [illegible]
2[illegible]	The sharp corners on the front end of [illegible] to be filled off by hand until a more [illegible] be developed.
5-7-20 #795-3894	Same change as forging drawing, also removed [illegible] ing cams to be carbonized and copper plated before grinding. The above change [illegible] to be made as soon as possible [illegible] tion; Type "C" Forgings on hand to be used [illegible]
6-14-20 #808-4106	Changed the diameter of shoulder which [illegible] from .810 to .812" .813 .813 This change was made in order to [illegible] alignment of and center [illegible]

	Time Gears and is to take effect at cams, shafts on hand [illegible] be used up. ([illegible])
9-17-20 #815-4652	Added dimensions and notes giving the rough, finish, and [illegible] specting sizes for diam. of shoulders at front end, [illegible] of flange, and diameters of front, center and rear [illegible] (G. [illegible])
	Note: The above dimensions bring drawings of T-[illegible] up to date, showing the dimensions bring used in the [illegible] at the present time.
10-12-20 824	FOR 1921
5799-840 7-27-21	Changed distance from rear of flange for time gear to the [illegible] #4 exhaust cam from 18-3/8" TO 18-13/32"
11-4-21 7138	Limits have been specified on the Pitch Diameter of [illegible] bringing them up to date with the sizes adopted by the [illegible] of Standards. (For sizes see drawing).
2-27-22 7482	Changed type of Steel from "E" selected TO Type "[illegible]".
6-19-22 7967	Specified cams to be finished on the ends.
8-13 1923 9885	FOR 1922 23

8-13 1923 FOR 1922 23
9885

FORM FORM 912
SYMBOL NO. T-410
Z

290-11

Card #6

RECORD OF CHANGES

NO. OF REQ. 1	NAME OF PART Cam Shaft (Finish Size)	
11-28-23 10291 12-14-23	Changed radius with which the corner at front end of exhaust cam #1 is rounded from 1/64" to 1/32"-3/64"	
3-11-24 10804	Added 3/16" to front end of exhaust cam #1, changing the length from 7/8" to 1-1/16" & distance between cam & flange FROM TO 1.958" 1.771" Rough Turn 1.962" 1.775" 1.967" 1.780" Grind 1.969" 1.782" 1.967" 1.780" Insp. Grind 1.970" 1.783" Also changed distance between front end of exhaust cam #1 & rear end of exhaust cam #2 from 7" to 7-3/16". Removed 1/32" - 3/64" R from the corner at front end of exhaust cam #1 & specified sharp edge to be removed with a stone. changed fillet at rear side of flange from 1/8" to 3/32"- 1/8" R	Galamb

5-2-24 11117	Changed rough turn diameter of rear bearing from .780"--.800" to .780"-.790" & of shoulder which supports gear from .850"--.870" to .850"--.860"; also rough turn length of front bearing from 1.771"--1.775" to 1.766"-1.771.	290-12 C. Martin
10-15-24 11999	Changed rough turn dia.. of rear bearing from .780" to .780" & rough turn dia. for gear post from .850" to .845". .785" .860" .850" 1790" Also specified for 1925.	C. Martin
2-25-25 No. Eng. Information issued.	CHANGED NOTE: "For development of cams see Drawing T-533 to Sketch 923"	
5-8-25 13043	Brought drawing up to date with change in forging by removing flat spot from edge of flange. Also specified relief groove in corner between flange and shoulder which supports time gear.	Galamb
6-14-25 17805	SPECIFIED for 1926.	Galamb.

290-13

Card No. 7.

Name CAM SHAFT

[illegible] diameter of bearings after grinding from .748 to .747, and removed
.749 .749
inspection limits (.747). Changed length of front bearing after grinding from
(.749)
1.7[illegible] to 1.780 and removed inspection limits (1.780). Removed .253 inspection
1.782 1.783 (1.783) .252
limits (.253) for thickness of flange. Also specified for 1927. (P E Martin)
(.252).

Changed diameter of shoulders which are not ground from .745 to .780, dia.
.755 .790
of bearings from .747 to .748, diameter at bottom of relief grooves from
.749 .749
.734 to .737, diameter at base of cams from .805 to .810, thickness of flange
.737 .740 .813 .813
from .248 to .248 and length of front bearing after grinding from 1.780 to 1.780
.252 .258 1.783 1.782
Removed inspection limits (.665) from diameter of shoulder in front of
(.675)
threaded shoulder for cam gear lock nut. Galamb.

291

Card No. 1

[illegible] No. of cards [illegible]

[illegible] All Chassis

[illegible] Sheldrick.

[illegible] Sheldrick.

[illegible] with change on finished shaft.
[illegible] from 2-12/16 to 2-7/16.
[illegible] be used. Sheldrick.

[illegible] bearings 1-11/16 x 1 long added.
[illegible] increased to 1-11/16 diameter. Sheldrick.

[illegible] at front end added to indicate
[illegible]
[illegible] from rear end of shaft to front shoulder removed.
[illegible] from rear shoulder to front shoulder added. Sheldrick.

[illegible] STOCK SIZE

(over)

DEFENDANT'S EXHIBIT NO. 291

291-2

11-17-27 4930	Drawing retraced, no change in part.
4-7-28 8115	Revised stock sizes.
7-19-28 9453	Specified the "EEE" steel out of which shafts are made to be "Select".
8-22-28 10035	Changed heat treatment before machining from 1470° F., cool slowly. Brinell hardness 170-228. to: 1560° F., cool slowly. Brinell hardness 149-179.
9-28-28 10419	Removed second and fourth bearings.
10-18-28 10578	Increased width of cams 1/8 and length of hub on flange end 1/32, changing other dimensions to correspond. Changed length of stock from 241-3/4 to 242-1/2 and weight per 1000 pieces from 11,500 lbs. to 12,145 lbs.
11-10-28 10903	Changed length of stock from 242-1/2, multiples of 24-1/4, shortest length 169-3/4, to: 241-3/4, multiples of 24-1/8 + 1/2, shortest length 169-3/8.
12-18-28 11087	Removed stock size.

(See card #2)

291-3

Part No. A-6250-A1 Forging Size
Drawing Size X

CAM SHAFT

1 req. All Chassis

Card No. 2

No. of Cards

4-11-29 12452	Changed length of rear bearing from 1-3/16 to 1-7/32 and overall length of shaft measured to bottom of draft from 21-7/32 to 21-1/4.
12-28-29 14938 (Supp.#1)	Added suffix "A1" to symbol number.

T- A-6250-A1 Oper. Finish Size Des. Z	292-1 Name CAM SHAFT	Card No 1 No. of cards 2

6-24-27 EDF 813	Added view showing cam outline and valve timing diagram. Reduced diameter of cam gear flange from 2-13/16 to 2-5/16 and dimension locating .3120 rear from 1.1875 to .9375. .3125 ALSO RELEASED FOR PRODUCTION. Sheldrick.
7-6-27 EDF 1077	Two intermediate bearings 1.559 diameter x 7/8 long added. 1.560 Rear bearing enlarged from .872 to 1.559 diameter. .873 1.560 Sheldrick.
11-4-27 4417	Second dowel hole added .929 below centerline and offset .125.
11-17-27 4930	Section of undercut added. Drawing retraced.
1-10-28 6462	Hole added on driving flange and note locating it accurately on centerline of #2 exhaust cam.

OVER

292-2

2-7-28 7053	Specified temperature of quenching solution to be 65° - 70° F., and parts to be removed from quenching solution at a temperature of 200° - 250° F. and drawn in boiling water 10 minutes.
7-19-28 9633	Specified the "EEE" steel out of which shafts are made to be "select".
9-28-28 10419	Removed second and fourth bearings. Changed heel diameter of cam from .954 to .953 and specified heel of cams to .955 be concentric with bearings within .002 total indicator reading. Cams are designed for theoretical gap of .015. Specified valves to be set to .010 gap. .013
2-6-29 11934	Changed length of front bearing from 1-25/32 to 1-13/16. and width of undercut from 1/8 to 3/16. Specified that width of all 45° chamfers on bearings be 1/64 instead of 1/64 and width of 30° chamfer on rear bearing 3/64 be 1/16 instead of 1/16, also width of chamfer on flange for gear be 1/64 3/32 3/64 instead of 1/32. Specified that distance between rear face of flange and front face of rear bearing be 18-15/16 instead of 18-15/16. 18-31/32

(See card #2)

DEFENDANT'S EXHIBIT NO. 292

292-3

CAM SHAFT

Gard No. 2

1 req. All Chassis 1930

No. of Cards

Changed angle of chamfer on end of rear bearing from 30° to 45° and width of chamfer from 1/16 to 1/64.
3/32 3/64

Changed distance between rear face of gear flange and rear end of shaft from 20 to 20-1/32, which changes overall length from 21-1/16 to 20-1/32 20-1/16 21-3/32 to 21-3/32.
21-1/8

Specified that pitch diameter of gear must be concentric with bearing diameter within .004 total runout.

Recommended dowel pin holes, specifying that same be located on a .9975 radius instead of .9975 above and .939 below centerline.

Specified that front corner of dowel holes be chamfered 45° x 1/64 wide and that rear corner of flange be chamfered 45° x 1/64 wide maximum.

(over)

292-4

10-15-29 14514 Specified 1-16-N-4 Thread instead of 1-16-USF, changing pitch diameter from .9562 to .9582 .9594 .9598

12-15-29 14733 Added suffix "A" to distinguish from "B" design. Specified one Oil Groove, each bearing instead of two, each bearing, to bring records up to date with present practice.

12-15-29 14733 (Supp.#1) Changed suffix from A to "A1"

1-30-30 15076 Changed Dowel Pin Holes in Cam Shaft from .312-.3125 to .3095-.310

#295
2/1/39

Ford Motor Company

FACTORY AND GENERAL OFFICES
3674 SCHAEFER ROAD
DEARBORN MICH

February 1, 1939

Bodman, Longley, Middleton,
Bogle, & Farley
1400 Buhl Building
Detroit, Michigan

Att: Mr. Farley

Dear Sirs:

Per your request today, we are giving below data of speeds and feeds on the Camshaft Shaper, comparing the Model "T" and Tractor Camshafts, based on information from you of 700 R.P.M. for Driving Pulley:

Driving Pulley runs @ 700 R.P.M.
Driven Gear = 13" Pitch Diameter
Driving Gear = 4-1/6" Pitch Diameter
Speed of Crank = $\frac{700 \times 4\text{-}1/6}{13}$ = 220 R.P.M.,
or 220 strokes per minute of slide.
Feed per stroke = 1/32.

Circumference of Model "T" Cam = approx. 2.9"
1/32 feed per stroke gives $\frac{2.9}{1/32}$ = 92.8,
or 93 strokes for total rotation of cam.
Total cutting time per shaft = $\frac{60 \times 92.8}{220}$ = 25.3 seconds.

Circumference of Tractor Cam = approx. 4.4"
1/32 feed per stroke gives $\frac{4.4}{1/32}$ = 140.8
or 141 strokes for total rotation of cam.
Total cutting time for cam = $\frac{60 \times 141}{220}$ = 38.5 seconds.

Surface speed of tool for Model "T":
220 strokes per minute
Cutting stroke 240°, Return stroke 120°, of revolution
Distance of stroke = 1-1/4"
Surface speed of tool = $\frac{220 \times 1\frac{1}{4} \times 3}{2 \times 12}$ = 34 ft. per min. average.

(Continued on sheet #2)

DEFENDANT'S EXHIBIT NO. 295

Surface speed of tool for Tractor:

220 strokes per minute
Cutting stroke 240°, Return stroke 120°, of revolution
Distance of stroke = 1-3/8"

Surface speed of tool:

$$\frac{220 \times 1\text{-}3/8 \times 3}{2 \times 12} = 38 \text{ feet per minute average.}$$

(This speed is OK. (not too fast)

Very truly yours

FORD MOTOR COMPANY

Wm F Pioch

NLB:JEK

WM F PIOCH

Mechanical Design Dept.

1610

FORD FORM 4004-A

#296
393
1-1-39

ORIGINAL

Ford Motor Company

HIGHLAND PARK, MICH.

This Order Number must appear on all Packing Slips, Bills of Lading, Shackles, Packages and Invoices

The FORD MOTOR COMPANY, of Highland Park, Michigan, first party, hereby agrees to purchase and receive, and

Purchase Order No.

Date

DELIVERY REQUIRED

Shipments are only to be made in accordance with the first party's "release authorization" which will be issued later. Release authorization (Form No. 3165 sample of which is attached hereto) shall when issued become a part hereof.

second party agrees to manufacture, sell and deliver materials specified below, subject to the terms and conditions stipulated:

SHIP VIA — Routing and manner of shipment will be included in Release Authorization which will be issued later and which becomes a part of this order.

TERMS

F. O. B.

QUANTITY	SYMBOL	DESCRIPTION OF MATERIAL	PRICE

CONDITIONS

Acceptance: This order constitutes an offer on the part of First Party upon the conditions and terms and at the prices stated herein, and to constitute a contract binding upon First Party, said offer must be accepted by execution of the acknowledgment in the form attached hereto by Second Party, it being expressly understood that no other form of acceptance, verbal or written, will be valid or binding upon First Party. There are no agreements or understandings other than those contained in this order.

Crating: No charges will be allowed for crating, boxing or drayage unless stated herein.

Inspection: Materials purchased are subject to First Party's inspection and approval and if rejected, will be held at Second Party's risk and returnable at Second Party's expense.

Invoices: All invoices must be rendered in duplicate, prices and extensions to appear on original only. Separate invoices required for each individual shipment.

Shipping Documents: Original bills of lading or express receipts, etc., properly signed by carrier representative, must be attached to the Second Party's invoices and both mailed to Ford Motor Co., Detroit, Mich., Attention Purchasing Department, not later than day after shipment. In case shipments are consigned to the First Party's Branch Assembly Plants, original bills of lading should be sent to the branch, while the signed duplicates should be forwarded to Detroit, Mich., with the Second Party's invoices.

Packing Slips: First Party will not receipt for materials unless accompanied by packing slips. Original packing slips for carload lots must be enclosed in envelope, (unsealed) addressed to Ford Motor Co., and marked inside our name and [illegible]. Original packing slips for L. C. L. shipments must be placed in each package. Copies relating to ALL shipments to be mailed direct to Ford Motor Co., at point of destination, "Attention Receiving Room."

Statements: To insure settlements as agreed, statement of account should be rendered monthly, in time to reach the First Party by the 5th proximo.

Cancellation: First Party reserves the right to cancel this order or any part thereof, if material is not shipped according to deliveries above specified, or for causes due to any acts or demands of the United States Government, or to fires, strikes, or other causes beyond First Party's control, or if material is not in accordance with blue prints, approved samples or specifications, or is defective in workmanship or material, or is not satisfactory to First Party.

Patents: Second Party guarantees that the sale or use of its products will not infringe any United States or foreign patent, and undertakes to indemnify First Party against all judgments, decrees, costs and expenses resulting from such alleged infringement, and covenants that Second Party will, upon request of First Party and at Second Party's own expense, defend, or assist in the defense of, any suit or action which may be brought against First Party or those selling or using any products of First Party by reason of any alleged infringement of any patent in the sale or use of Second Party's products.

Freight Rate: The price herein specified is based on present rate of freight and any reduction in present freight rates is to be credited to the account of the first party.

Ford Motor Company

By _____
Purchasing Dept.

Purchase Order No.

ACKNOWLEDGMENT OF ORDER

Acceptance of order must be made on this form, without change in the terms, prices or conditions, and without additions thereto. Otherwise acceptance will be returned to Seller.

FORD MOTOR COMPANY
DETROIT, MICHIGAN

Date_____

Gentlemen:

We hereby acknowledge receipt of your ORDER NO. _____ which we accept subject to all terms and conditions stipulated thereon.

Firm Name_____

OVERSIZE PAGE – SEE NEXT FRAME
FOR REMAINDER OF PAGE

4-1-39 Ford Motor Company

HIGHLAND PARK, MICH.

This Order Number must appear on all Packing Slips, Bills of Lading, Machines, Packages and Invoices

The FORD MOTOR COMPANY, of Highland Park, Michigan, first party, hereby agrees to purchase and receive, and

Purchase Order No.

Date

DELIVERY REQUIRED

Shipments are only to be made in accordance with the first party's "release authorization" which will be issued later. Release authorization (Form No. 3565 sample of which is attached hereto) shall when issued become a part hereof.

second party agrees to manufacture, sell and deliver materials specified below, subject to the terms and conditions stipulated:

SHIP VIA — Routing and manner of shipment will be included in Release Authorization which will be issued later and which becomes a part of this order.

TERMS

F. O. B.

QUANTITY	SYMBOL	DESCRIPTION OF MATERIAL	PRICE

CONDITIONS

Acceptance: This order constitutes an offer on the part of First Party upon the conditions and terms and at the prices stated herein, and to constitute a contract binding upon First Party, said offer must be accepted by execution of the acknowledgment in the form attached hereto by Second Party, it being expressly understood that no other form of acceptance, verbal or written, will be valid or binding upon First Party. There are no agreements or understandings other than those contained in this order.

Crating: No charges will be allowed for crating, boxing or drayage unless stated herein.

Inspection: Materials purchased are subject to First Party's inspection and approval and if rejected, will be held at Second Party's risk and returnable at Second Party's expense.

Invoices: All invoices must be rendered in duplicate, prices and extensions to appear on original only. Separate invoices required for each individual shipment.

Shipping Documents: Original bills of lading or express receipts, etc., properly signed by carrier representatives, must be attached to the Second Party's invoices and both mailed to Ford Motor Co., Detroit, Mich., Attention Purchasing Department, not later than day after shipment. In case shipments are consigned to the First Party's Branch Assembly Plants, original bills of lading should be sent to the branch, while the signed duplicates should be forwarded to Detroit, Mich., with the Second Party's invoices.

Packing Slips: First Party will not receipt for materials unless accompanied by packing slips. Original packing slips for carload lots must be enclosed in envelope, (unsealed) addressed to Ford Motor Co., and tacked inside car door. Original packing slips for L. C. L. shipments must be placed in each package. Copies relating to A.L.L. shipments to be mailed direct to Ford Motor Co., at point of destination. "Attention Receiving Room."

Statements: To insure settlements as agreed, statement of account should be rendered monthly, in time to reach the First Party by the 5th proximo.

Cancellation: First Party reserves the right to cancel this order or any part thereof, if material is not shipped according to deliveries above specified, or for causes due to any acts or demands of the United States Government, or to fires, strikes, or other causes beyond First Party's control, or if material is not in accordance with blue prints, approved samples or specifications, or is defective in workmanship or material, or is not satisfactory to First Party.

Patents: Second Party guarantees that the sale or use of its products will not infringe any United States or foreign patent, and undertakes to indemnify First Party against all judgments, damages, costs and expenses resulting from such alleged infringement, and covenants that Second Party will upon request of First Party and at Second Party's own expense, defend, or assist in the defense of, any suit or action which may be brought against First Party or those selling or using any products of First Party by reason of any alleged infringement of any patent in the sale or use of Second Party's products.

Freight Rate: The price herein specified is based on present rate of freight and any reduction in present freight rates is to be credited to the account of the first party.

Ford Motor Company

By _____
Purchasing Dept.

Purchase Order No.

ACKNOWLEDGMENT OF ORDER

Acceptance of order must be made on this form, without change in the terms, prices or conditions, and without additions thereto. Otherwise acceptance will be returned to Seller.

FORD MOTOR COMPANY
DETROIT, MICHIGAN

Date_____

Gentlemen:

We hereby acknowledge receipt of your ORDER NO. _____ which we accept subject to all terms and conditions stipulated thereon.

Firm Name_____

_____
Signed by Officer of Company

Please detach, sign and return this form, immediately, by mail.

DEFENDANT'S EXHIBIT NO. 296

Card No

T- F-446
Oper Forging.
Des Z-Size.

Name CAMSHAFT.
1 Reqd. Fordson Tractor.

7-3-18	Length of front bearing surface changed from 3" to 2-15/16" and 9-3/8" dimension changed to 9-7/16"
2-4-19	Changed 2-1/8" to limits 2-1/8" - 2-1/32" and 1-7/16" to 1-7/16" - 11-32" Overall 29-1/16" given limits 29-1/16" to 29-1/8" added section "BB" Section "AA" showing maximum and minimum forging size. also finished camshaft Former 1-1/16" dimension given limits to 1 to 1-1/16" locating cam apex.
3-6-19	Changed type "G" steel drop forging to type "G" H.R. special forging bars.
3-18-19	Cam profile 1 - 1-1/16" changed to 1-1/32" Cam profile 43/64R changed to 11/16R Diameter between cams 1-5/16" - 1-1/4 changed to 1-7/32" Diameter bearings 2-1/8" - 2-1/32" changed to 2-1/16" Diameter for timing gear 1-7/16" - 1-11/32" changed to 1-11/32" note added "To allow 1/16" on a side for wear on dies."
3-26-19	Overall length changed from 29-1/16" to 29-1/8" to 29-1/16" to 29-3/16" these limits agreed upon by manufacturing and inspection departments to give basis for accepting forgings. Added note "Part dies on this line to avoid flash on point of number #1 cam.
5-6-20	Shortened journal (rear) 1/4" to conform to shortened bearing in cylinder. This reduces over roll length from 29-1/16" - 29-3/16" to 28-13/16" - 28-15/16"
4-12-21	Changed type of steel from "F" to "H" special to eliminate copper plating and carbonitride. This steel differs from type "F" in carbon content only and is 40 - 45 instead of 35 - 45
6-4-21	Added section "CC" and note "Stamp symbol 446-1,2 makerstrade mark and letter "F" on flat as shown."
8-25-22	Changed material from type "F" steel to type "EE" steel to standardize on stock as these two are almost identical.
12-6-22	Corrected analysis to conform to "EE" steel.
12-30-22	1" width of cams increased to 1-1/4" to provide greater contact surface with push rod and to reduce wear.
8-3-23	Changed note "Place symbol ( ) and maker's trade mark here" to "Place symbol ( ) maker's trade mark and die number here" this is to enable the inspection department to tell if forgings are made from dies which have been oked.
11-22-24	Specified "Hot Rolled Steel" instead of "Hot Rolled Special Forging Bar." To reduce cost of steel as this is unnecessary.
1-19-26	Flat for symbol and trade mark removed to location between #3 and #4 inlet instead of #4 inlet and #4 exhaust. This is on account of rolls in quenching fixture running on shaft between #4 inlet and #4 exhaust(Hommel)

DEFENDANT'S EXHIBIT NO. 298

Page #1

Card No._____

Name CAMSHAFT.
1 Reqd. Fordson Tractor.

8-15-18	Recess added to relieve grinding wheel on 1.250" - 1.251" dia. Added 1.270 1.272" turn. Note "Carbonizing.Harden. and grind changed to " Heat Treated. Added 1.955" - 1.958" turn before carbonizing. Added 2" dia, rough turn before copper plating.
8-18-18	New Heat Treatment given camshaft.
7-8-19	2-7/8" dimension changed to 2-13/16" - 9-1/2" dimension changed to 9-9/16" in accordance with change of 7-3- on forging.
7-24-18	Corrected lead of spiral oil groove from 3-1/2" to 7" to agree with tool equipment.
8-31-18	2" rough turn diameter given limits of 1.986 - 1.989"
10-11-18	Added note "Break Corner" on hole for commutator brush.pin.
12-27-18	Added basic pitch diameter .5256 ± .001" - .002" to 9/16" x 18 threads. Added basic diameter Pitch dia. .9535 ± .001" - .002" to 12 x 14 threads.
1-28-19	Basic pitch dia. .5255 ± .001" - .002" changed to pitch dia. .526 - .528" basic (.5255) Root dia. .480" - .485" (Basic .490" variation in lead must (Over)

not exceed ± .0005" in 9 threads = .500" Basic pitch dia. .9535" ± .001" - .002" changed to pitch dia. .953" - .955" (Basic .9535) Root dia. .900" - .905" (Basic .907") Variation in lead must not exceed ± .0005" in 7 threads = .500"

2-15-19	Revised Heat Treatment on camshaft and Flywheel stud as follows:-"Type "5-A" steel to be used after type "A" steel is all used up for F-451 Flywheel stud.
3-6-19	Changed type "C" steel to read type "C" H.R. special forging bar.
3-18-19	Cam profile - 1 - 1-1/16" changed to 1-1/32" - Cam profile 43/64R changed to 11/16R Dia.between cams 1-5/16" - 1-1/4" changed to 1-7/32" - Dia. bearings between 2-1/8" - 2-1/32" changed to 2-1/16" - Dia. [illegible] for timing gear 1-7/16" - 1-11/32" changed to 1-11/32" - Note added "Allow 1/16" on a side for wear on dies.
3-27-19	Added note "Rough turn 1/16" dia. before hardening. Also rough turn .700" - .725" diameter.
6-19-19	Changed rough turn from 1.986" - 1.989" to 1.989" - 2.001" and Changed [illegible] finish turn dimension from 1.955" - 1.958" to 1.965" - 1.968" to conform to present practice and gages. Purpose of change is to allow more metal for grinding.
9-25-19	Removed note"Rough turn 1-1/16" diameter before hardening." Changed note from "Rough turn" to "Rough turn before hardening is .700" - .725" diameter.
5-6-20	Shortened rear journal 1/4" to conform to shortened bearing in cylinder.

Page #2
T- F-446AR
Oper. Finish
Des. Z-Size.

Card No.

Name CAMSHAFT.
1 Reqd. Fordson Tractor.

28-

cont'd	This reduces overall length from 15/16" to 28-11/16"
5-6-20	
4-23-21	Changed type of steel from "G" to "F" special to eliminate carbonizing and copper plating. Removed 1.989" - 2.001" rough turn diameter as not necessary. Changed oil groove to avoid shart corners on bearing surface and added section "CC" to drawing showing same.
5-14-21	1" threaded shoulder cut back 1/16" to prevent timer roller hub from interfering Added 1/16" x 45° chamfer on 9/16" thread.
5-28-21	Changed Heat Treatment drawing on account of material being changed from typ "G" steel to type "F" steel.
7-30-21	.898" dimension locating center of 2.500 radius changed to .909" to correct error. Added notes "Valve opens" and "Valve closes" to explain 52-1/2° angles
8-25-22	Changed material from type "F" steel to type "EE" steel to stnadardize on stock as these two are alsost identical.
10-24-22	Changed material specified on heat treat charts from type "F" to type "EE" steel to comply with change dated 8-25-22 this does not affect the heat treat ment as it is the same for both types of steel. (Over)
11-24-22	1500° F. 1-1/4" min changed to 1450°f.up to heat in air." drawing accomplished by removing from water while still warm, thus making it unnecessary t reheat.
1-2-23	Widened cams from 7/8" to 1-1/8" to increase bearing on push rod and thus reduce wear.
11-22-23	Specified "Hot Rolled Steel" instead of "Hot Rolled Special Forging Bar." to reduce cost of steel as this is unnecessary.
12-12-23	Added 1/16" x 45° chamfer at front end of front bearing to prevent chipping of corner.
12-18-23	1-3/16" diameter between cams given limits 1/185" - 1/195" dia. to fit heat treating fixture(Herkhots)
3-27-25	1470° F.normalizing temperature increased to 1550° F. to allow this camshaft to be run in same furnace with other normalized stock.(Harry Ford)
10-16-28 E.1.1005 Supp#4	Added AR to this part indicating used for repairs only.
11-10-28 E.1.1005 Supp 3	Added "AR" to symbol number indicating use for repairs on 1917-1928 Fordson (Revised 11-10-28) E.J.Farkas

see next card.

TRACTOR PRODUCTION

Month	1917	1918	1919	1920	1921	1922	1923	1924	1925
January		357	5,128	4,860	--	--	7,904	4,837	7,086
February		1,115	5,228	4,395	257	1,702	7,908	7,100	9,300
March		1,351	6,179	3,009	3,781	6,101	11,275	8,457	11,638
April		1,526	2,118	2,381	5,625	7,444	11,386	10,113	11,310
May		1,972	31	3,149	6,170	8,950	11,083	10,029	10,000
June		2,357	2,194	4,024	6,182	9,333	9,001	7,183	8,699
July		3,288	5,560	4,188	3,974	9,657	6,670	5,607	7,830
August		3,412	6,491	4,027	1,654	8,527	8,420	6,000	7,800
September		3,610	6,754	3,741	414	231	7,393	6,225	7,500
October		4,040	6,554	333	525	3,934	8,353	6,900	8,100
November		3,691	6,702	--	425	5,113	7,342	5,400	7,200
December	254	4,448	4,048	--	188	5,760	5,163	5,159	7,705
TOTAL	254	31,167	56,987	34,107	29,195	66,752	101,898	83,010	104,168

2-2-39

1615

DEFENDANT'S EXHIBIT NO. 299

EXHIBIT 301.

SUBSTITUTE PAGES OF MOISE & BURGESS REPORT.

Changes made:

1. Substitution of the Ford cam shaper as the standard of comparison in place of the Landis grinder for computing A-6250 and F-446 costs.

2. Addition of the cost of the straightening operation to the turning operation on the Melling cam lathe for all three types of shafts.

3. Substitution of the Pioch cam mill as the standard of comparison in place of the Landis grinder for computing additional losses "based upon rejection of claims made by defendant, but not substantiated by records supplied."

NOTE: The reproduction herein of certain text copied exactly from Plaintiff's Exhibit Z is not to be taken as an admission of the correctness thereof.

LOSSES SUSTAINED BY FORD MOTOR COMPANY THROUGH USE OF MELLING CAM LATHES FOR ROUGH TURNING CAMS OF CAMSHAFTS T-410, A-6250 AND F-446 FROM JUNE 16, 1925 TO DATE USE OF THESE MACHINES WAS ABANDONED.

MINIMUM **LOSS*** "from June 16, 1925 to February 3, 1931 based upon production claimed by defendant or admitted by defendant's employees"		$35,921.67*
ADDITIONAL LOSSES "BASED UPON REJECTION OF CLAIMS MADE BY DEFENDANT, BUT NOT SUBSTANTIATED BY RECORDS SUPPLIED"		
"Production by Pioch machines, from May 16, 1930 to February 3, 1931, claimed by defendant but not substantiated by records supplied" (Note A):		
May 16, 1930 to December 31, 1930—105,168 A-6250 camshafts at $.006128 (minimum loss per shaft during this period)	$644.47	
January 1, 1931 to February 3, 1931—36,960 A-6250 camshafts at $.006976 (minimum loss per shaft during this period)	257.83	
		902.30
"Production by Pioch machines, from February 4, 1931 to July 31, 1931, claimed by defendant but not substantiated by records supplied."		
"Sufficient Melling cam lathes to have rough turned the cams upon the entire production of camshafts during this period were apparently available for use, the records supplied by defendant not having established their abandonment for this purpose."		
435,157 A-6250 camshafts at $ .006976		3,035.66
TOTAL **LOSS** "BASED UPON POSITIVE RECORDS AND UPON REJECTION OF UNSUBSTANTIATED CLAIMS BY DEFENDANT"		$39,859.63

Note A: (The Pioch machine was available beginning May 16, 1930 and is therefore the correct standard of comparison instead of the Landis grinder):

	1930	*1931*
Cost per shaft using Melling cam lathe, excluding straightening operation	$ .035184	$ .040050
Cost per shaft using Pioch mill with a production of 42 shafts per hour	.029056	.033074
Loss by using Melling cam lathe	$ .006128	$ .006976

* PRINTER'S NOTE: Losses appear in red on the original, and are here reproduced in boldface type.

SUBSTITUTE FOR PLAINTIFF'S EXHIBIT A.

Cost of Machining Cams upon Ford Camshafts with Melling Cam Lathes and with Ford Cam Shapers, and Minimum Loss by Ford Motor Company through Use of Melling Cam Lathes from June 16, 1925 to February 3, 1931. Based on Production Per Hour Claimed or Admitted by Defendant's Witnesses for Camshafts T-410 and F-446, and Calculated Therefrom for Camshaft A-6250.

	Production	Cost Per Shaft		Total Cost		Loss through Use of Melling Cam Lathes
		Ford Cam Shapers	Melling Cam Lathes	Ford Cam Shapers	Melling Cam Lathes	
Model T—T-410						
June 16 to December 31, 1925	1,093,205	$ .031314	$ .033913	$ 34,232.62	$ 37,073.86	$ 2,841.24
1926	1,699,205	.039292	.042554	66,765.16	72,307.97	5,542.81
1927	506,086	.045418	.049188	22,985.41	24,893.36	1,907.95
1928	120,448	.033864	.036674	4,078.85	4,417.31	338.46
January 1 to 15, 1929	1,222	.032914	.035646	40.22	43.56	3.34
Totals, T-410	3,420,166			$128,102.26	$138,736.06	$ 10,633.80
Model A—A-6250						
November and December, 1927	9,287	.048320	.053942	$ 448.75	$ 496.78	$ 48.03
1928	843,456	.037602	.041626	31,715.64	35,109.71	3,394.07
1929	1,961,973	.042127	.046636	82,652.04	91,498.57	8,846.53
1930	1,370,417	.053839	.059601	73,781.88	81,678.22	7,896.34
January 1 to February 3, 1931	37,866	.061284	.067843	2,320.58	2,568.94	248.36
Totals, A-6250	4,222,999			$190,918.89	$211,352.22	$ 20,433.33
Tractor—F-446						
June 16 to December 31, 1925	59,973	.071085	.087154	$ 4,263.18	$ 5,226.89	$ 963.71
1926	99,111	.081124	.099462	8,040.28	9,857.78	1,817.50
1927	100,705	.079195	.097097	7,975.33	9,778.15	1,802.82
January, February, March, 1928	15,875	.075382	.092422	1,196.69	1,467.20	270.51
Totals, F-446	275,664			$ 21,475.48	$ 26,330.02	$ 4,854.54
Grand Total—All Types	7,918,829			$340,496.63	$376,418.30	$ 35,921.67

SUBSTITUTE FOR PLAINTIFF'S EXHIBIT A-1.

SUBSTITUTE FOR PLAINTIFF'S EXHIBIT A-1.

Productive Labor Cost of Machining Cams upon Ford Camshafts with Melling Cam Lathes and with Ford Cam Shapers, and Minimum Loss by Ford Motor Company through Use of Melling Cam Lathes from June 16, 1925 to February 3, 1931. Based on Production Per Hour Claimed or Admitted by Defendant's Witnesses for Camshafts T-410 and F-466, and Calculated Therefrom for Camshaft A-6250.

	Production	Productive Labor Cost Per Shaft		Productive Labor Total Cost		Productive Labor Loss through Use of Melling Cam Lathes
		Ford Cam Shapers	Melling Cam Lathes	Ford Cam Shapers	Melling Cam Lathes	
Model T—T-410						
June 15 to December 31, 1925	1,093,205	$ .016286	$ .017638	$ 17,803.94	$ 19,281.95	$ 1,478.01
1926	1,699,205	.016922	.018327	28,753.95	31,141.33	2,387.38
1927	506,086	.018622	.020168	9,424.33	10,206.74	782.41
1928	120,448	.016450	.017815	1,981.37	2,145.78	164.41
January 1 to 15, 1929	1,222	.017004	.018415	20.78	22.50	1.72
Totals, T-410	3,420,166			$ 57,984.37	$ 62,798.30	$ 4,813.93
Model A—A-6250						
November and December, 1927	9,287	.019812	.021932	$ 183.99	$ 203.68	$ 19.69
1928	843,456	.018266	.020221	15,406.57	17,055.53	1,648.96
1929	1,961,973	.019543	.021635	38,342.84	42,447.28	4,104.44
1930	1,370,417	.021062	.023316	28,863.72	31,952.64	3,088.92
January 1 to February 3, 1931	37,866	.021276	.023553	805.64	891.85	86.21
Totals, A-6250	4,222,999			$ 83,602.76	$ 92,550.98	$ 8,948.22
Tractor—F-446						
June 16 to December 31, 1925	59,973	.026066	.031958	$ 1,563.26	$ 1,916.62	$ 353.36
1926	99,111	.026868	.032941	2,662.91	3,264.82	601.91
1927	100,705	.029378	.036019	2,958.51	3,627.29	668.78
January, February, March, 1928	15,875	.027312	.033486	433.58	531.59	98.01
Totals, F-446	275,664			$ 7,618.26	$ 9,340.32	$ 1,722.06
Grand Total—All Types	7,918,829			$149,205.39	$164,689.60	$ 15,484.21

SUBSTITUTE FOR PLAINTIFF'S EXHIBIT A-2.

Burden Cost of Machining Cams upon Ford Camshafts with Melling Cam Lathes and with Ford Cam Shapers, and Minimum Loss by Ford Motor Company through Use of Melling Cam Lathes from June 16, 1925 to February 3, 1931. Based on Production Per Hour Claimed or Admitted by Defendant's Witnesses for Camshafts T-410 and F-446, and Calculated Therefrom for Camshaft A-6250.

	Production	Burden Cost Per Shaft		Burden Total Cost		Burden Loss through Use of Melling Cam Lathes
		Ford Cam Shapers	Melling Cam Lathes	Ford Cam Shapers	Melling Cam Lathes	
Model T—T-410						
June 15 to December 31, 1925	1,093,205	$ .015028	$ .016275	$ 16,428.68	$ 17,791.91	$ 1,363.23
1926	1,699,205	.022370	.024227	38,011.21	41,166.64	3,155.43
1927	506,086	.026796	.029020	13,561.08	14,686.62	1,125.54
1928	120,448	.017414	.018859	2,097.48	2,271.53	174.05
January 1 to 15, 1929	1,222	.015910	.017231	19.44	21.06	1.62
Totals, T-410	3,420,166			$ 70,117.89	$ 75,937.76	$ 5,819.87
Model A—A-6250						
November and December, 1927	9,287	.028508	.031560	$ 264.76	$ 293.10	$ 28.34
1928	843,456	.019336	.021405	16,309.07	18,054.18	1,745.11
1929	1,961,973	.022584	.025001	44,309.20	49,051.29	4,742.09
1930	1,370,417	.032777	.036285	44,918.16	49,725.58	4,807.42
January 1 to February 3, 1931	37,866	.040008	.044290	1,514.94	1,677.09	162.15
Totals, A-6250	4,222,999			$107,316.13	$118,801.24	$ 11,485.11
Tractor—F-446						
June 16 to December 31, 1925	59,973	.045019	.055196	$ 2,699.92	$ 3,310.27	$ 610.35
1926	99,111	.054256	.066521	5,377.37	6,592.96	1,215.59
1927	100,705	.049817	.061078	5,016.82	6,150.86	1,134.04
January, February, March, 1928	15,875	.048070	.058936	763.11	935.61	172.50
Totals, F-446	275,664			$ 13,857.22	$ 16,989.70	$ 3,132.48
Grand Total—All Types	7,918,829			$191,291.24	$211,728.70	$ 20,437.46

SUBSTITUTE FOR PLAINTIFF'S EXHIBIT B.

Unit Costs Per Camshaft of Shaping Cams with Ford Cam Shapers Compared with Turning the Cams on Melling Cam Lathes (Including Straightening Operations) Based upon Production per Hour Claimed or Admitted by Defendant's Witnesses for Camshafts T-410 and F-446, and Calculated Therefrom for Camshaft A-6250.

	Burden Ratio to Productive Labor	Productive Labor Rate Per Hour	Burden Cost Per Hour	With Ford Cam Shapers				With Melling Lathes			
					Cost Per Camshaft				Cost Per Camshaft		
				Man Hours Per Shaft	Productive Labor	Burden	Total	Man Hours Per Shaft	Productive Labor	Burden	Total
	(1)	(2)									
Model T—T-410											
June 16 to December 31, 1925	.9227	$ .8143	$ .7514	.02000(a)	$ .016286	$ .015028	$ .031314	.02166(b)	$ .017638	$ .016275	$ .033913
1926	1.3219	.8461	1.1185	.02000	.016922	.022370	.039292	.02166	.018327	.024227	.042554
1927	1.4389	.9311	1.3398	.02000	.018622	.026796	.045418	.02166	.020168	.029020	.049188
1928	1.0586	.8225	.8707	.02000	.016450	.017414	.033864	.02166	.017815	.018859	.036674
January 1 to 15, 1929	.9357	.8502	.7955	.02000	.017004	.015910	.032914	.02166	.018415	.017231	.035646
Model A—A-6250											
November and December, 1927	1.4389	.8985	1.2929	.02205(e)	.019812	.028508	.048320	.02441(f)	.021932	.031560	.053492
1928	1.0586	.8284	.8769	.02205	.018266	.019336	.037602	.02441	.020221	.021405	.041626
1929	1.1556	.8863	1.0242	.02205	.019543	.022584	.042127	.02441	.021635	.025001	.046636
1930	1.5562	.9552	1.4865	.02205	.021062	.032777	.053839	.02441	.023316	.036285	.059601
January 1 to February 3, 1931	1.8804	.9649	1.8144	.02205	.021276	.040008	.061284	.02441	.023553	.044290	.067843
Tractor—F-446											
June 16 to December 31, 1925	1.7271	.8161	1.4095	.03194(c)	.026066	.045019	.071085	.03916(d)	.031958	.055196	.087154
1926	2.0194	.8412	1.6987	.03194	.026868	.054256	.081124	.03916	.032941	.066521	.099462
1927	1.6957	.9198	1.5597	.03194	.029378	.049817	.079195	.03916	.036019	.061078	.097097
January, February, March, 1928	1.7600	.8551	1.5050	.03194	.027312	.048070	.075382	.03916	.033486	.058936	.092422

(a) Based on production of 25 per machine hour or 50 per man hour (pp. 205, 212, 222 and 277 of printed record of appeal).

(b) Based on production of 37.5 per machine hour, or 75 per man hour (pp. 212 and 223 of printed record of appeal) plus .5 minutes for straightening (Exh. 14 of Defendant's Exh. C).

(c) Based on production of 15.65 per machine hour, or 31.30 per man hour. Calculated from (a) above, due weight being given to larger area of F-446 (See addition to Plaintiff's Exh. C).

(d) Based on production of 25 per machine hour or 50 per man hour (p. 256 of printed record of appeal) plus 1.15 minutes for straightening (See Defendant's Exh. 215).

(e) Based on production of 22.68 per machine hour or 45.35 per man hour. Calculated from (a) above, due weight being given to larger area of A-6250 (See addition to Plaintiff's Exh. C).

(f) Based on production of 34.706 per machine hour or 69.412 per man hour. Calculated from (b) above, due weight being given to the greater area of A-6250 (See Plaintiff's Exh. C) plus .60 minutes for straightening (See defendant's further statement of account Exh. C page 23, as amended).

(1) See Plaintiff's Exhibit B-1.

(2) See Plaintiff's Exhibit B-2.

ADDITION TO PLAINTIFF'S EXHIBIT C.

CALCULATIONS TO DETERMINE PRODUCTION PER HOUR OF A-6250 AND F-446 CAMSHAFTS—BASED ON SPEEDS CLAIMED OR ADMITTED BY DEFENDANT.

	Minutes Other Than Turning	Remainder—Actual Turning Minutes	Total Minutes Per Shaft	Shafts Per Machine Hour	Shafts Per Man Hour
	(C)				
Table H					
Production of T-410 camshafts on Ford cam shaper determined to be 25 per hour. Non-turning and turning time would be:					
Machine	.72	1.68	2.40	25	
Man	.36	.84	1.20		50
A-6250, non-turning time	.36				
Turning time .84 x 1.1464 (A)		.9630	1.3230	22.68	45.35
Table I					
Production of T-410 camshafts on Ford cam shaper determined to be 25 per hour. Non-turning and turning time would be:					
Machine	.72	1.68	2.40	25	
Man	.36	.84	1.20		50
F-446, non-turning time	.36				
Turning time .84 x 1.85287 (A)		1.5564	1.9164	15.65	31.30

EXHIBIT 302.

SUBSTITUTE PAGES OF PLAINTIFF'S STATEMENT OF ACCOUNT.

Changes made:

1. Substitution of the Ford cam shaper as the standard of comparison in place of the Landis grinder for computing A-6250 and F-446 costs.

2. Inclusion of the straightening operation in the computations of the costs of machining on Melling cam lathe for all three types of shafts.

3. Substitution of production of 35 Model T-410 camshafts per machine hour on the Melling cam lathe in place of 37.5 per hour.

4. Substitution of production of 30 Model A-6250 camshafts per machine hour on the Melling cam lathe in place of 34.706 per hour.

5. Substitution of production of 14.27 Model F-446 camshafts per machine hour on Melling cam lathe in place of 25 per hour.

6. Substitution of the Pioch cam mill as the standard of comparison in place of the Landis grinder for computing additional losses "based upon rejection of claims made by defendant, but not substantiated by records supplied."

NOTE: The reproduction herein of certain text copied exactly from Plaintiff's Exhibit Z is not to be taken as an admission of the correctness thereof.

LOSSES SUSTAINED BY FORD MOTOR COMPANY THROUGH USE OF MELLING CAM LATHES FOR ROUGH TURNING CAMS OF CAMSHAFTS T-410, A-6250 AND F-446 FROM JUNE 16, 1925 TO DATE USE OF THESE MACHINES WAS ABANDONED.

MINIMUM **LOSS*** from June 16, 1925 to February 3, 1931 based upon production per hour determined from records of the defendant		$64,124.08*
ADDITIONAL LOSSES "BASED UPON REJECTION OF CLAIMS MADE BY DEFENDANT, BUT NOT SUBSTANTIATED BY RECORDS SUPPLIED"		
"Production by Pioch machines from May 16, 1930 to February 3, 1931, claimed by defendant but not substantiated by records supplied" (Note A):		
May 16, 1930 to December 31, 1930—105,168 A-6250 camshafts at $.011647 (Minimum loss per shaft during this period)	$ 1,224.89	
January 1, 1931 to February 3, 1931—36,960 A-6250 camshafts at $.013257 (Minimum loss per shaft during this period)	489.98	
		1,714.87
"Production by Pioch machines, from February 4, 1931 to July 31, 1931, claimed by defendant but not substantiated by records supplied."		
"Sufficient Melling cam lathes to have rough turned the cams upon the entire production of camshafts during this period were apparently available for use, the records supplied by defendant not having established their abandonment for this purpose."		
435,157 A-6250 camshafts at $.013257		5,768.88
Total **Loss** "Based Upon Positive Records and Upon Rejection of Unsubstantiated Claims by Defendant"		$71,607.83

Note A: (The Pioch machine was available beginning May 16, 1930 and is therefore the correct standard of comparison instead of the Landis grinder):

	1930	*1931*
Cost per shaft using Melling cam lathe, excluding straightening operations	$ .040703	$ .046331
Cost per shaft using Pioch mill with a production of 42 shafts per hour	.029056	.033074
Loss by using Melling cam lathe	$ .011647	$ .013257

* PRINTER'S NOTE: Losses appear in red on original and have been reproduced in boldface type.

SUBSTITUTE FOR PLAINTIFF'S EXHIBIT A.

Cost of Machining Cams upon Ford Camshafts with Melling Cam Lathes (Including Straightening Operation) and with Ford Cam Shapers, and Minimum Loss by Ford Motor Company through Use of Melling Cam Lathes from June 16, 1925 to February 3, 1931. Based upon Production Per Hour Determined from Records of the Defendant.

	Production	Cost Per Shaft		Total Cost		Loss through Use of Melling Cam Lathes
		Ford Cam Shapers	Melling Cam Lathes	Ford Cam Shapers	Melling Cam Lathes	
Model T—T-410						
June 16 to December 31, 1925	1,093,205	$ .031314	$ .035416	$ 34,232.62	$ 38,716.95	$ 4,484.33
1926	1,699,205	.039292	.044439	66,765.17	75,510.97	8,745.80
1927	506,086	.045418	.051367	22,985.41	25,996.12	3,010.71
1928	120,448	.033864	.038300	4,078.85	4,613.15	534.30
January 1 to 15, 1929	1,222	.032914	.038026	40.22	46.47	6.25
Totals, T-410	3,420,166			$128,102.27	$144,883.66	$ 16,781.39
Model A—A-6250						
November and December, 1927	9,287	.050249	.058444	$ 466.66	$ 542.77	$ 76.11
1928	843,456	.039102	.045480	32,980.82	38,360.38	5,379.56
1929	1,961,973	.043808	.050953	85,950.11	99,968.41	14,018.30
1930	1,370,417	.055988	.065120	76,726.90	89,241.55	12,514.65
January 1 to February 3, 1931	37,866	.063729	.074124	2,413.16	2,806.78	393.62
Totals, A-6250	4,222,999			$198,537.65	$230,919.89	$ 32,382.24
Tractor—F-446						
June 16 to December 31, 1925	59,973	.071085	.120605	$ 4,263.18	$ 7,233.04	$ 2,969.86
1926	99,111	.081124	.137638	8,040.28	13,641.44	5,601.16
1927	100,705	.079195	.134364	7,975.33	13,531.13	5,555.80
January, February, March, 1928	15,875	.075382	.127894	1,196.69	2,030.32	833.63
Totals, F-446	275,664			$ 21,475.48	$ 36,435.93	$ 14,960.45
Grand Total—All Types	7,918,829			$348,115.40	$412,239.48	$ 64,124.08

1625

SUBSTITUTE FOR PLAINTIFF'S EXHIBIT A-1.

Productive Labor Cost of Machining Cams upon Ford Camshafts with Melling Cam Lathes (Including Straightening Operation) and with Ford Cam Shapers, and Minimum Labor Loss by Ford Motor Company through Use of Melling Cam Lathes from June 16, 1925 to February 3, 1931. Based upon Production Per Hour Determined from Records of the Defendant.

	Production	Productive Labor Cost Per Shaft		Total Productive Labor Cost		Productive Labor Loss through Use of Melling Cam Lathes
		Ford Cam Shapers	Melling Cam Lathes	Ford Cam Shapers	Melling Cam Lathes	
Model T—T-410						
June 16 to December 31, 1925	1,093,205	$ .016286	$ .018419	$ 17,803.94	$ 20,135.74	$ 2,331.80
1926	1,699,205	.016922	.019139	28,753.95	32,521.08	3,767.13
1927	506,086	.018622	.021061	9,424.33	10,658.68	1,234.35
1928	120,448	.016450	.018605	1,981.37	2,240.93	259.56
January 1 to 15, 1929	1,222	.017004	.019232	20.78	23.50	2.72
Totals, T-410	3,420,166			$ 57,984.37	$ 65,579.93	$ 7,595.56
Model A—A-6250						
November and December, 1927	9,287	.020603	.023963	$ 191.34	$ 222.54	$ 31.20
1928	843,456	.018995	.022093	16,021.45	18,634.47	2,613.02
1929	1,961,973	.020323	.023638	39,873.17	46,377.12	6,503.95
1930	1,370,417	.021903	.025475	30,016.24	34,911.37	4,895.13
January 1 to February 3, 1931	37,866	.022125	.025734	837.78	974.44	136.66
Totals, A-6250	4,222,999			$ 86,939.98	$101,119.94	$ 14,179.96
Tractor—F-446						
June 16 to December 31, 1925	59,973	.026066	.044224	$ 1,563.26	$ 2,652.24	$ 1,088.98
1926	99,111	.026868	.045585	2,662.91	4,517.97	1,855.06
1927	100,705	.029378	.049844	2,958.51	5,019.54	2,061.03
January, February, March, 1928	15,875	.027312	.046338	433.58	735.62	302.04
Totals, F-446	275,664			$ 7,618.26	$ 12,925.37	$ 5,307.11
Grand Totals—All Types	7,918,829			$152,542.61	$179,625.24	$ 27,082.63

1625

SUBSTITUTE FOR PLAINTIFF'S EXHIBIT A-2.

Burden Cost of Machining Cams upon Ford Camshafts with Melling Cam Lathes (Including Straightening Operation) and with Ford Cam Shapers, and Minimum Burden Loss by Ford Motor Company through Use of Melling Cam Lathes from June 16, 1925 to February 3, 1931. Based upon Production Per Hour Determined from Records of the Defendant.

	Production	Burden Cost Per Shaft		Total Burden Cost		Burden Loss through Use of Melling Cam Lathes
		Ford Cam Shapers	Melling Cam Lathes	Ford Cam Shapers	Melling Cam Lathes	
Model T—T-410						
June 16 to December 31, 1925	1,093,205	$ .015028	$ .016997	$ 16,428.68	$ 18,581.21	$ 2,152.53
1926	1,699,205	.022370	.025300	38,011.22	42,989.89	4,978.67
1927	506,086	.026796	.030306	13,561.08	15,337.44	1,776.36
1928	120,448	.017414	.019695	2,097.48	2,372.22	274.74
January 1 to 15, 1929	1,222	.015910	.018794	19.44	22.97	3.53
Totals, T-410	3,420,166			$ 70,117.90	$ 79,303.73	$ 9,185.83
Model A—A-6250						
November and December, 1927	9,287	.029646	.034481	$ 275.32	$ 320.23	$ 44.91
1928	843,456	.020107	.023387	16,959.37	19,725.91	2,766.54
1929	1,961,973	.023485	.027315	46,076.94	53,591.29	7,514.35
1930	1,370,417	.034085	.039645	46,710.66	54,330.18	7,619.52
January 1 to February 3, 1931	37,866	.041604	.048390	1,575.38	1,832.34	256.96
Totals, A-6250	4,222,999			$111,597.67	$129,799.95	$ 18,202.28
Tractor—F-446						
June 16 to December 31, 1925	59,973	.045019	.076381	$ 2,699.92	$ 4,580.80	$ 1,880.88
1926	99,111	.054256	.092053	5,377.37	9,123.47	3,746.10
1927	100,705	.049817	.084520	5,016.82	8,511.59	3,494.77
January, February, March, 1928	15,875	.048070	.081556	763.11	1,294.70	531.59
Totals, F-446	275,664			$ 13,857.22	$ 23,510.56	$ 9,653.34
Grand Total—All Types	7,918,829			$195,572.79	$232,614.24	$ 37,041.45

1627

SUBSTITUTE FOR PLAINTIFF'S EXHIBIT B.

Unit Costs Per Camshaft of Shaping Cams with Ford Cam Shapers Compared with Turning the Cams on Melling Cam Lathes (Including Straightening Operation). Based upon Production Per Hour Determined from Records of the Defendant for Camshafts T-410, A-6250 and F-446.

	Burden Ratio to Productive Labor	Productive Labor Rate Per Hour	Burden Cost Per Hour	With Ford Cam Shapers				With Melling Lathes			
				Man Hours Per Shaft	Cost Per Camshaft			Man Hours Per Shaft	Cost Per Camshaft		
					Productive Labor	Burden	Total		Productive Labor	Burden	Total
Model T—T-410	(1)	(2)									
June 16 to December 31, 1925	.9227	$ .8143	$ .7514	.02000(a)	$ .016286	$ .015028	$ .031314	.02262(b)	$ .018419	$ .016997	$ .035416
1926	1.3219	.8461	1.1185	.02000	.016922	.022370	.039292	.02262	.019139	.025300	.044439
1927	1.4389	.9311	1.3398	.02000	.018622	.026796	.045418	.02262	.021061	.030306	.051367
1928	1.0586	.8225	.8707	.02000	.016450	.017414	.033864	.02262	.018605	.019695	.038300
January 1 to 15, 1929	.9357	.8502	.7955	.02000	.017004	.015910	.032914	.02262	.019232	.018794	.038026
Model A—A-6250											
November and December, 1927	1.4389	.8985	1.2929	.02293(e)	.020603	.029646	.050249	.02667(f)	.023963	.034481	.058444
1928	1.0586	.8284	.8769	.02293	.018995	.020107	.039102	.02667	.022093	.023387	.045480
1929	1.1556	.8863	1.0242	.02293	.020323	.023485	.043808	.02667	.023638	.027315	.050953
1930	1.5562	.9552	1.4865	.02293	.021903	.034085	.055988	.02667	.025475	.039645	.065120
January 1 to February 3, 1931	1.8804	.9649	1.8144	.02293	.022125	.041604	.063729	.02667	.025734	.048390	.074124
Tractor—F-446											
June 16 to December 31, 1925	1.7271	.8161	1.4095	.03194(c)	.026066	.045019	.071085	.05419(d)	.044224	.076381	.120605
1926	2.0194	.8412	1.6987	.03194	.026868	.054256	.081124	.05419	.045585	.092053	.137638
1927	1.6957	.9198	1.5597	.03194	.029378	.049817	.079195	.05419	.049844	.084520	.134364
January, February, March, 1928	1.7600	.8551	1.5050	.03194	.027312	.048070	.075382	.05419	.046338	.081556	.127894

(a) Based on production of 25 per machine hour or 50 per man hour (See Exh. 13 of Defendant's Further Statement of Account).

(b) Based on production of 35 per machine hour or 70 per man hour plus .5 minutes for straightening operation (See Exh. 14 of Defendant's Further Statement of Account and the H. E. Payne report).

(c) Based on production of 15.65 per machine hour or 31.30 per man hour (Calculated from (a) above, due weight being given to larger area of F-446. See addition to Plaintiff's Exhibit C).

(d) Based on production of 14.27 per machine hour or 28.54 per man hour plus 1.15 minutes for straightening operation (See Defendant's Exhibit 215).

(e) Based on production of 21.81 per machine hour or 43.62 per man hour (See Defendant's Further Statement of Account page 23 as amended).

(f) Based on production of 30 per machine hour or 60 per man hour plus .60 minutes for straightening (See Defendant's Further Statement of Account page 23 as amended).

(1) See Plaintiff's Exhibit B-1.

(2) See Plaintiff's Exhibit B-2.

ADDITION TO PLAINTIFF'S EXHIBIT C.

CALCULATIONS TO DETERMINE PRODUCTION PER HOUR OF A-5260 AND F-446 CAMSHAFTS—BASED ON SPEEDS CLAIMED OR ADMITTED BY DEFENDANT.

	Minutes Other Than Turning	Remainder—Actual Turning Minutes	Total Minutes Per Shaft	Shafts Per Machine Hour	Shafts Per Man Hour
	(C)				
Table H					
Production of T-410 camshafts on Ford cam shaper determined to be 25 per hour. Non-turning and turning time would be:					
Machine	.72	1.68	2.40	25	
Man	.36	.84	1.20		50
A-6250, non-turning time	.36				
Turning time .84 x 1.1464 (A)		.9630	1.3230	22.68	45.35
Table I					
Production of T-410 camshafts on Ford cam shaper determined to be 25 per hour. Non-turning and turning time would be:					
Machine	.72	1.68	2.40	25	
Man	.36	.84	1.20		50
F-446, non-turning time	.36				
Turning time .84 x 1.85287 (A)		1.5564	1.9164	15.65	31.30

1630

Parts Price List

MODEL "A" and "A A"

Effective February 1, 1931

Ford Motor Company

304
sheet 1

DEFENDANT'S EXHIBIT NO. 304

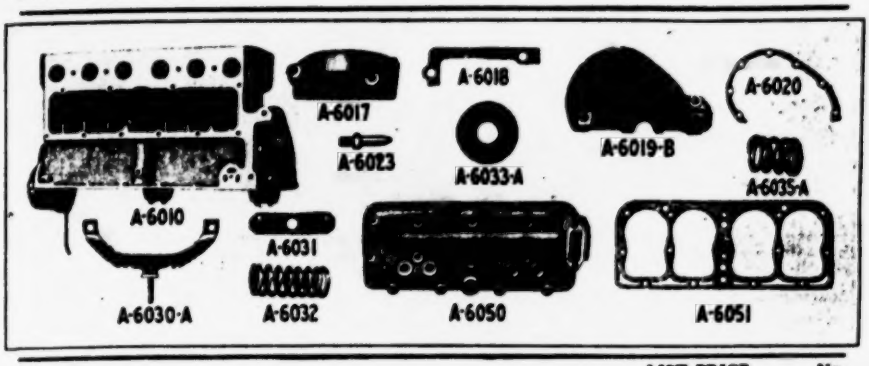

Part No.	Name of Part	Year	LIST PRICE Lots of 10 per lot	LIST PRICE Lots of 100 per lot	LIST PRICE Each	No. Req. per Car
A-5563-A	Rear spring leaf No. 1	1928-31	With A-5560-A-B-C		$1 05	1
A-5563-B	Rear spring leaf No. 1	1928-31	With A-5560-D-E		1 20	1
A-5565-A	Rear spring leaf No. 2	1928-31	With A-5560-A-B-C-D		75	1
A-5565-B	Rear spring leaf No. 2	1928-31	With A-5560-E		90	1
A-5566	Rear spring leaf No. 3	1928-31	With A-5560-A-B-C-D-E		65	1
A-5567-A	Rear spring leaf No. 4	1928-31	With A-5560-A-B-D-E		55	1
A-5567-B	Rear spring leaf No. 4	1928-31	With A-5560-C		45	1
A-5568-A	Rear spring leaf No. 5	1928-31	With A-5560-A-B-C		40	1
A-5568-B	Rear spring leaf No. 5	1928-31	With A-5560-D-E		45	1
A-5569-A	Rear spring leaf No. 6	1928-31	With A-5560-A-B-C		35	1
A-5569-B	Rear spring leaf No. 6	1928-31	With A-5560-D-E		40	1
A-5570-A	Rear spring leaf No. 7	1928-31	With A-5560-A-D		30	1
A-5570-B	Rear spring leaf No. 7	1928-31	With A-5560-C		30	1
A-5570-C	Rear spring leaf No. 7	1928-31	With A-5560-E		30	1
A-5571	Rear spring leaf No. 7	1928-31	With A-5560-B		25	1
	Rear spring leaf No. 8	1928-31	Order A-5571 with A-5560-A-D-E		25	1
	Rear spring leaf No. 8	1928-31	Order A-5573 with A-5560-B		20	1
A-5572	Rear spring leaf No. 9	1928-31	With A-5560-A-D-E		20	1
A-5573	Rear spring leaf No. 10	1928-31	With A-5560-A-D-E		20	1
A-5585	Rear spring dummy leaf (used with A-5560-C)	1928-31			15	1
	Rear spring bushing	1928-31	Order A-4020		04	3
	Rear spring tie bolt	1928-31	Order A-20927 with A-5560-B-C $0 25	$2 00	03	1
	Rear spring tie bolt	1928-31	Order A-20942 with A-5560-D-E 1 35		02	1
	Rear spring tie bolt	1928-31	Order A-20920 with A-5560-A		02	1
	Rear spring tie bolt nut	1928-31	Order A-21769		01	1
A-5705	Rear spring clip	1928-31			20	1
A-5708	Rear spring clip bar, ⅜" thick	1928-31			15	2
A-5709	Rear spring clip bar, ½" thick	1928-31			20	2
	Rear spring clip nut	1928-31	Order A-21870 35	3 00	05	4
	Rear spring clip cotter	1928-31	Order A-23500 gr. 20	M 50 dz.	03	4
A-5710	Rear spring clip bar, ⅝" thick	1928-31			15	2
A-5715	Rear spring hanger	1928-31			30	2
	Rear spring hanger bar	1928-31	Order A-5448		05	2
	Rear spring hanger nut	1928-31	Order A-21794		03	4
	Rear spring hanger cotter	1928-31	Order A-23531 gr. 20	M 50 dz.	03	4
	Rear spring lubricator fitting	1928-31	Order A-24094-S7	*	10	4
A-5724-A	Rear spring clamp	1928-31			05	2
	Rear spring clamp bolt	1928-31	Order A-20546 08		01	3
	Rear spring clamp bolt nut	1928-31	Order A-21663-S2	75	01	3
A-5724-C	Spring clamp—Use with A-5560-D and E	1928-31			05	2

ENGINE

CYLINDER

A-6005	ENGINE ASSEMBLY less clutch and transmission	1928-31			*120 00	1
A-6010	CYLINDER	1928-31			*22 00	1
	Cylinder oil hole plug	1928-31	Order A-24486 15		02	1
	Cylinder head stud—5¼"	1928-31	Order A-24082		08	2
	Cylinder head stud—4⅞"	1928-29	Order A-24051-AR		05	3
	Cylinder head stud—4⅞"	1928-29	Order A-24051-BR 20		04	1
	Cylinder head stud—3¼"	1928-31	Order A-24051-C 40		05	1
	Cylinder head stud—3½"	1928-31	Order A-20830		05	9
	Cylinder head nut	1928-31	Order A-21780-S8 35		04	16
	Exhaust and intake manifold stud	1928-31	Order A-24052		04	4
	Manifold stud nut	1928-31	Order A-21780-S9 35		04	1
	Manifold clamp	1928-31	Order A-9443		04	4

*Not subject to regular discount.

304
sheet 2

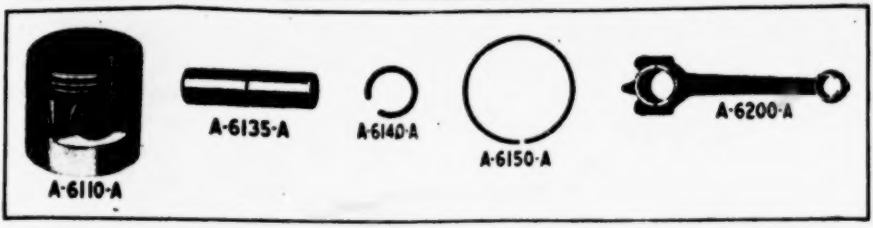

Part No.	Name of Part	Year	LIST PRICE Lots of 10 per lot	LIST PRICE Lots of 100 per lot	LIST PRICE Each	No. Req. per Car
	Manifold gland	1928-31	Order A-9440		$0 01	6
	Manifold gasket	1928-31	Order A-9448-A		05	6
A-6017	Cylinder timing gear cover side	1928-31			50	1
A-6018	Cylinder timing gear cover gasket	1928-31			01	1
	Timing gear cover to cylinder bolt —long	1928-31	Order A-21111	$0 30	04	1
	Timing gear cover to cylinder bolt —short	1928-31	Order A-21120-S2		03	1
A-6019-B	Cylinder front cover	1928-31			1 25	1
A-6020	Cylinder front cover gasket	1928-31			01	1
	Cylinder front cover bolt	1928-31	Order A-20902-S2		02	6
	Front cover bolt lock washer	1928-31	Order A-22245	$0 50	01	6
	Front support to frame bolt	1928-29	Order A-21220		02	2
	Front support to frame bolt lock washer	1928-29	Order A-22330		01	2
	Front cover packing	1928-29	Order A-6700		06	1
A-6023	Timing pin	1928-31			03	1
A-6030-A	ENGINE FRONT SUPPORT	1928-31			75	1
A-6031	Engine front support auxiliary spring	1928-31			10	1
A-6032	Engine front support spring	1928-31			03	2
A-6033-A	Engine front support stop washer	1928-31			01	1
A-6035-A	Engine front support retaining spring	1928-31			02	1
	Engine front support screw	1928-31	Order A-21240		04	2
	Engine front support screw washer	1928-31	Order A-22340		01	2
	Engine front support nut	1928-31	Order A-21791-S3		04	1
	Engine front support washer	1928-31	Order A-22423		01	1
	Engine front support nut cotter	1928-31	Order A-23531 gr. 20 M 50		dz. 03	1
A-6050-A	CYLINDER HEAD	1928-31			4 75	1
A-6051-A	Cylinder head gasket	1928-31			08	1
PISTON AND CONNECTING ROD						
A-6110-A	PISTON	1928-31			1 75	4
A-6110-BR	Piston—.005" O. S.	1928-31			1 75	4
A-6110-CR	Piston—.010" O. S.	1928-31			1 75	4
A-6110-ER	Piston—.020" O. S.	1928-31			1 75	4
A-6110-GR	Piston—.030" O. S.	1928-31			1 75	4
A-6135-A	Piston pin	1928-31			45	4
A-6135-BR	Piston pin—.002" O. S.	1928-31			45	4
A-6140-A	Piston pin retainer—.115" wide	1928-31			04	4
A-6140-BR	Piston pin retainer—.126" wide	1928-31			04	4
A-6150-A	Piston ring	1928-31			10	4
A-6150-BR	Piston ring—.005" O. S.	1928-31			10	
A-6150-CR	Piston ring—.010" O. S.	1928-31			10	4
A-6150-ER	Piston ring—.020" O. S.	1928-31			10	4
A-6150-GR	Piston ring—.030" O. S.	1928-31			10	4
A-6151-R	Piston control ring	1928-29			15	4
A-6152-AR	Oil control ring—$\frac{1}{8}$"	1928-30			15	4
A-6152-BR	Oil control ring—.005" O. S.	1928-30			15	
A-6152-CR	Oil control ring—.010" O. S.—$\frac{1}{8}$" wide	1928-30			15	4
A-6152-ER	Oil control ring—.020" O. S —$\frac{1}{8}$" wide	1928-30			15	4
A-6152-GR	Oil control ring—.030" O. S —$\frac{1}{8}$" wide	1928-30			15	4
A-6153-A	Oil control ring $\frac{3}{16}$" wide	1928-31			12	4
A-6153-BR	Oil control ring—.005" O. S.	1928-31			12	
A-6153-CR	Oil control ring—.010" O. S. $\frac{3}{16}$" wide	1928-31			12	4
A-6153-ER	Oil control ring—.020" O. S. $\frac{3}{16}$" wide	1928-31			12	4
A-6153-GR	Oil control ring—.030" O. S. $\frac{3}{16}$" wide	1928-31			12	4
A-6200-A	CONNECTING ROD ASSEMBLY	1928-31			2 25	4
A-6220	Connecting rod shim	1928-31			01	8
	Connecting rod nut	1928-31	Order A-21799		04	8
	Connecting rod cotter	1928-31	Order A-23531 gr. 20 M 50		dz. 03	8
CAMSHAFT AND CRANKSHAFT						
A-6250-A	CAM SHAFT	1928-31			5 00	1
A-6256	Cam shaft gear	1928-31			1 75	1
A-6259	Cam shaft nut	1928-31			15	1

304 sheet 3

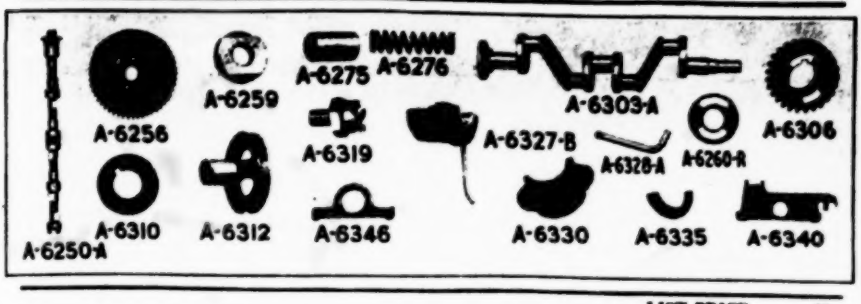

Part No.	Name of Part	Year	LIST PRICE Lots of 10 per lot	LIST PRICE Lots of 100 per lot	LIST PRICE Each	No. Req. per Car
A-6260-R	Camshaft washer	1930-31			$0 05	1
A-6275	Cam shaft thrust plunger	1928-31			10	1
A-6276	Cam shaft thrust plunger spring	1928-31			02	1
A-6303-A	CRANKSHAFT	1928-31			14 00	1
A-6306	Crankshaft gear	1928-31			55	1
	Crankshaft gear key	1928-31	Order A-23903		04	1
A-6310	Crankshaft oil slinger	1928-31			03	1
A-6312	Crankshaft pulley assy.	1928-31			60	1
A-6319	Crankshaft ratchet	1928-31			25	1
*A-6327-AR	Crankshaft rear bearing cap assy.	1928-29			1 50	1
*A-6327-B	Crankshaft rear bearing cap assy.	1928-31			1 50	1
*A-6327-CR	Crankshaft rear bearing cap assy. (Undersize)	1928-31			1 50	1
	Crankshaft rear bearing bolt 3⅝" long	1928-29	Order A-21214-AR		06	2
	Crankshaft rear bearing bolt 4 1/16" long	1928-31	Order A-21214-B		07	2
	Crankshaft rear bearing bolt nut	1928-31	Order A-21841	$4 50	05	2
	Crankshaft rear bearing cotter	1928-31	Order A-23531	gr. $0 20 M 50	dz. 03	2
	Crankshaft rear bearing cap plug	1928-31	Order A-24454	60	01	1
A-6328-A	Crankshaft rear bearing oil pipe assy. (ball check type)	1928-31			25	1
A-6328-B	Crankshaft rear bearing oil pipe assy. (ball check type)	1930-31			25	1
*A-6330	Crankshaft front and center bearing cap	1928-31			55	2
	Crankshaft front and center bearing bolt	1928-31	Order A-21215	70 6 00	08	4
	Crankshaft front and center bearing bolt nut	1928-31	Order A-21841	4 50	05	4
	Crankshaft front and center bearing cotter	1928-31	Order A-23531	gr. 20 M 50	dz. 03	4
A-6335	Crankshaft rear bearing seal	1928-31			15	1
A-6340	Crankshaft rear bearing shim	1928-31			01	6
A-6346	Crankshaft front and center bearing shim	1928-31			01	12

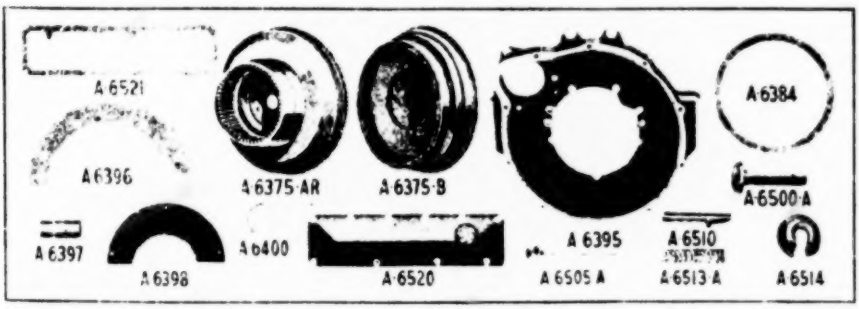

FLYWHEEL AND VALVES

†A-6375-AR	FLYWHEEL ASSEMBLY	1928			8 75	1
A-6375-B	FLYWHEEL ASSEMBLY	1928-31			6 00	1
	Flywheel to crankshaft bolt	1928-31	Order A-21113		10	4
A-6384	Flywheel ring gear	1928-31			09	1

*Specify finished or rough babbitted. †Use with multiple disc clutch.

304 sheet 4

EXHIBIT 305.

FORD MOTOR COMPANY.

LOSS COMPUTED BY COMPARING THE OPERATIONS OF ROUGH MACHINING F-446 CAMSHAFTS ON MELLING CAM LATHES AND ON FORD CAM SHAPERS.

For the period from June 16, 1925 to March 31, 1928.

	Amounts
Direct labor costs:	
On Melling cam lathes	$12,925.31
On Ford cam shapers	7,259.33
Loss	$ 5,665.98

DESCRIPTION OF MEANS AND METHOD USED IN THIS COMPUTATION.

Direct labor costs have been computed in the same general manner that T-410 and A-6250 labor costs were computed in Defendant's Further Statement of Account, that is, by comparing the Melling cam lathe and the Ford cam shaper. The amounts for the operation of the Melling cam lathe have been determined from an operation sheet prepared by Ford Motor Company of England dated April 4, 1935, which is Defendant's Exhibit 215. The operation times used are number 9 "Straighten," 1.15 minutes, and number 13 "Turn 8 Cams," 2.1016 minutes, or a total of 3.2516 minutes per man. The minutes for the shaping operation on the Ford cam shaper, assuming that no straightening operation would be necessary, amounts to 1.8261 minutes per man. This amount is determined by applying to the shaping time of 1.20 minutes on model T-410 camshaft the increase in time that would be required to shape the F-446 camshaft on the Ford cam shaper. The increase in time was taken from Defendant's Exhibit 295, which shows that one cycle on the T-410 camshaft took 25.3 seconds while one cycle on the F-446 camshaft would take 38.5 seconds.

COMPARATIVE COSTS OF DIRECT LABOR FOR TWO OPERATIONS ON MODEL F-446 CAMSHAFTS ON FORD CAM SHAPERS AND ON MELLING CAM LATHES.

For the period from June 16, 1925 to March 31, 1928.

Periods	Ford Cam Shapers				Melling Cam Lathes		
	Production of Model F-446 Camshafts	Hours Required for Two Operations (Production multiplied by 1.8261 minutes or by .030435 hours)	Average Direct Labor Rates	Direct Labor Cost of Two Operations	Hours Required for Two Operations (Production multiplied by 3.2516 minutes or by .05419 hours)	Average Direct Labor Rates	Direct Labor Cost of Two Operations
June 16 to 30, 1925	5,242	159.54	$ .8171	$ 130.36	284.06	$ .8171	$ 232.11
July	9,681	294.64	.8318	245.08	524.61	.8318	436.37
August	9,245	281.37	.8245	231.99	500.99	.8245	413.07
September	8,745	266.15	.8143	216.73	473.89	.8143	385.89
October	9,363	284.96	.8008	228.20	507.38	.8008	406.31
November	8,825	268.59	.8046	216.11	478.23	.8046	384.78
December	8,872	270.02	.8191	221.17	480.77	.8191	393.80
January, 1926	11,995	365.07	.8204	299.50	650.01	.8204	533.27
February	12,195	371.15	.8213	304.83	660.85	.8213	542.76
March	15,092	459.33	.8305	381.47	817.84	.8305	679.22
April	10,124	308.12	.8358	257.53	548.62	.8358	458.54
May	8,823	268.53	.8317	223.34	478.12	.8317	397.65
June	9,645	293.55	.8462	248.40	522.66	.8462	442.27
July	6,554	199.47	.8498	169.51	355.16	.8498	301.81
August	6,766	205.92	.8507	175.18	366.65	.8507	311.91
September	6,552	199.41	.8594	171.37	355.05	.8594	305.13
October	4,914	149.56	.8724	130.48	266.29	.8724	232.31
November	4,830	147.00	.8924	131.18	261.74	.8924	233.58
December	1,621	49.34	.9038	44.59	87.84	.9038	79.39
January, 1927	4,636	141.10	.9178	129.50	251.22	.9178	230.57
February	7,032	214.02	.9263	198.25	381.06	.9263	352.98
March	13,510	411.18	.9366	385.11	732.11	.9366	685.69
April	9,704	295.34	.9483	280.07	525.86	.9483	498.67
May	6,944	211.34	.9529	201.39	376.30	.9529	358.58
June	7,398	225.16	.9160	206.25	400.90	.9160	367.22
July	6,531	198.77	.9137	181.62	353.91	.9137	323.37
August	9,977	303.65	.9114	276.75	540.65	.9114	492.75
September	9,737	296.35	.9067	268.70	527.65	.9067	478.42
October	9,606	292.36	.9020	263.71	520.55	.9020	469.54
November	10,380	315.91	.9001	284.35	562.49	.9001	506.30
December	5,250	159.78	.8979	143.47	284.50	.8979	255.45
January, 1928	7,795	237.24	.8920	211.62	422.41	.8920	376.79
February	5,360	163.13	.8120	132.46	290.46	.8120	235.85
March	2,720	82.78	.8342	69.06	147.40	.8342	122.96
	275,664	8,389.83		$7,259.33	14,938.23		$12,925.31

Average direct labor rates are for Department 410.

COPY BOUND VERTICALLY

#306
2/11/39

REQUISITION NO. T 1587

REQUISITION FOR SUPPLIES

PURCHASE ORDER NO.

DEPT. NO.

PURCHASING DEPARTMENT,
HARVESTER BUILDING, CHICAGO, ILL.

November 20, 1919

Tractor Works

1 - Gordon Standard Cam Turning Machine, belt drive, complete with tools and equipment for forming Cam Shaft 8049 T. Blue print attached. Contour drawing No. 5636 H to be sent later. To conform to specifications embodied in attached quotation Oct. 6, 1919.

RUSH Delivery all possible.

Acct. 4679 App.

APPROVED

SIGNED

DEPT.

306

OVERSIZE PAGE – SEE NEXT FRAME

#306
LBS
2/11/39

REQUISITION NO. T 1587

REQUISITION FOR SUPPLIES

PURCHASE ORDER NO.

DEPT. NO.

T. PURCHASING DEPARTMENT,
HARVESTER BUILDING, CHICAGO, ILL.

November 20, 1919

Tractor Works

1 - Gordon Standard Cam Turning Machine, belt drive, complete with tools and equipment for forming Cam Shaft 8049 T. Blue print attached. Contour drawing No. 5646 H to be sent later. To conform to specifications embodied in attached quotation Oct. 6, 1919.

RUSH Delivery all possible.

Acct. 4679 App.

APPROVED

SIGNED

DEPT.

DEFENDANT'S EXHIBIT NO. 306

1637

Ex 307

5768

5768
T-1587

Nov. [illegible]

Tractor

Tractor Works, 21st Blvd. [illegible] Rockwell Street.

Milwaukee.
Net cash thirty days.

Gentlemen:

Assuming that you can give us delivery about February 1st, you may enter our order for the following to be shipped Tractor Works -

1 - Gordon standard cam turning machine, belt drive, complete with twelve sets of tools and equipment for forming cam shaft [illegible]049-T, including master cam shaft and two work driving dogs, one steady rest, eccentric turning device, and complete set of wrenches.

Price - Fifty-Three hundred ($5300.00) Dollars.

In entering our order you guarantee this machine to be of high grade construction, having the very best of materials and workmanship, and further that we may expect to obtain eighteen (18) [illegible] cam shafts per hour.

We are enclosing print [illegible] and will send you contour [illegible] shortly.

Yours truly,

[illegible] -

Copy to Mr McDonald - Office

Copy to Manufacturing Dept. - 18th Floor

Chas. Gordon, Inc.,

Milwaukee, Wisconsin.

OVERSIZE PAGE – SEE NEXT FRAME

Ex 307

5768

5768
T-1587

Nov. [illegible]

Tractor

Tractor Works, 21st Avd. [illegible] Rockwell Street.

Milwaukee.
Net cash thirty days.

Gentlemen:

Assuming that you can give us delivery about February 1st, you may enter our order for the following to be shipped Tractor Works -

- Gordon standard cam turning machine, belt drive, complete with twelve sets of tools and equipment for forming cam shaft [illegible]049-T, including master cam shaft and two work driving dogs, one steady rest, eccentric turning device, and complete set of wrenches.

Price - Fifty-Three hundred ($5300.00) Dollars.

In entering our order you guarantee this machine to be of high grade construction, having the very best of materials and workmanship, and further that we may expect to obtain eighteen (18) [illegible] cam shafts per hour.

We are enclosing print [illegible] and will send you contour [illegible] shortly.

Yours truly,

[illegible]

Copy to Mr [illegible] - Office

Copy to Manufacturing Dept. - [illegible]th Floor

Chas. Gordon, Inc.,

Milwaukee, Wisconsin.

DEFENDANT'S EXHIBIT NO. 307

Tractor Works Machine No. T 1040

262-4411

INSTALLATION OF MACHINERY

[redacted] MACHINE TOOLS

Name and Description of Machine Gordon Std. Cam Turning Machine

Made by Chas. Gordon Inc. Maker's No. 104-20

Purchased from Chas. Gordon Inc. Milwaukee Wis.

Date Installed April 1920 Building 4 Main Plant Floor 2

COST	Material $ 5412.30	Grey Iron Fdry. No. 1—No. 2	
	Labor 19.86	Mall. Fdry	Twine Mill
	Burden 11.00	Shop Order or Account No. 4079	
	Total $ 5443.33		

P.O. 8768

J. R. Daily Foreman

Works Auditor

Works Form 75 SM 1-15-20

MAY 27 1920 1-1

Cam Turning Machine arranged for Belt Drive Master Camshaft and 2 Work Driving Dogs.

Invoice	2-16-20	$300.00
Material		85.07
Freight		26.42
		$412.30

DEFENDANT'S EXHIBIT NO. 308

[illegible] Work Date [illegible] Report No. [illegible]

DISPOSITION OF MACHINERY

[illegible]/39

We have this day [illegible] Machine No. [illegible]

Described as [illegible]

From Building 1 Floor 1 To Scrapped.

Date of Installation [illegible] 19[illegible] Appraisal Value $ [illegible].33

FOREMAN.

Approved J B Baily

WORKS AUDITOR.

Works Form [illegible]
PRINTED IN U. S. A.

AUG 1 1 1927

DEFENDANT'S EXHIBIT NO. 309

1640

Oct. 28, 1924.

1,512,995

H. W. MELLING

LATHE

Filed Feb. 27 1923 3 Sheets-Sheet 1

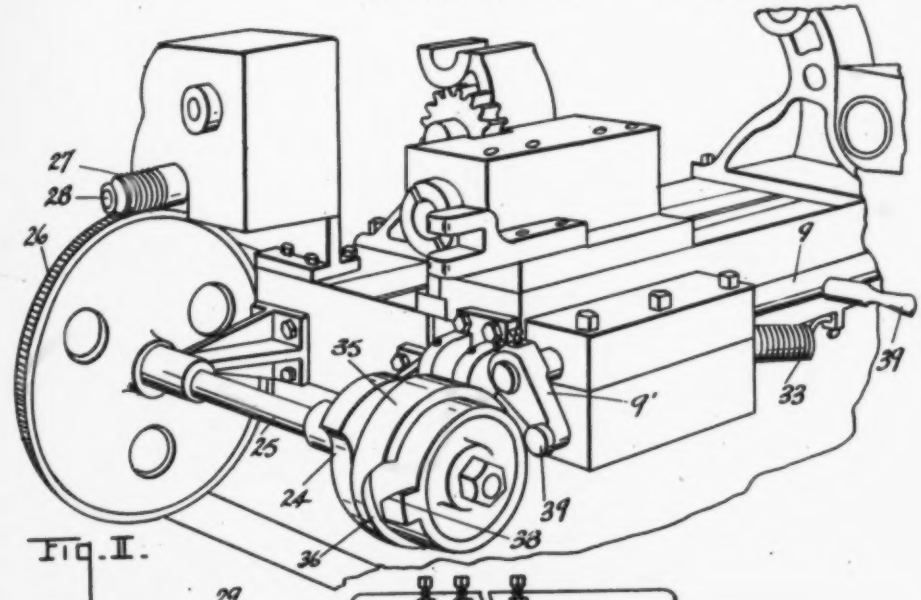

Fig. II.

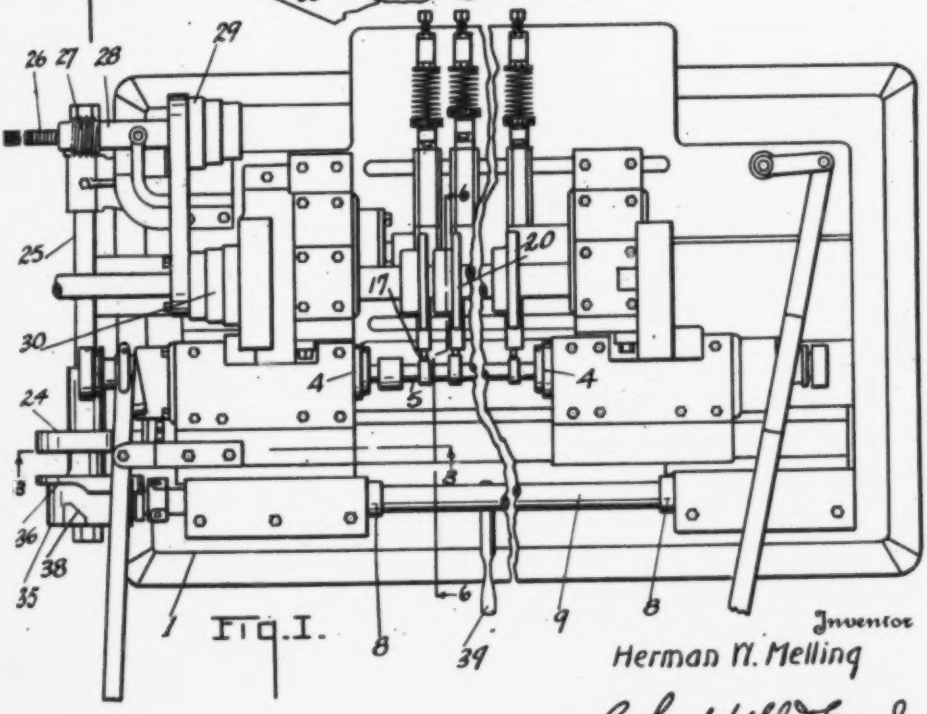

Fig. I.

Inventor

Herman W. Melling

By Chappell & Earl

Attorneys

DEFENDANT'S EXHIBIT NO. 312

DEFENDANT'S EXHIBIT NO. 312

Oct. 28, 1924. 1,512,995

H. W. MELLING

LATHE

Filed Feb. 27, 1923 3 Sheets-Sheet 2

Fig. III.

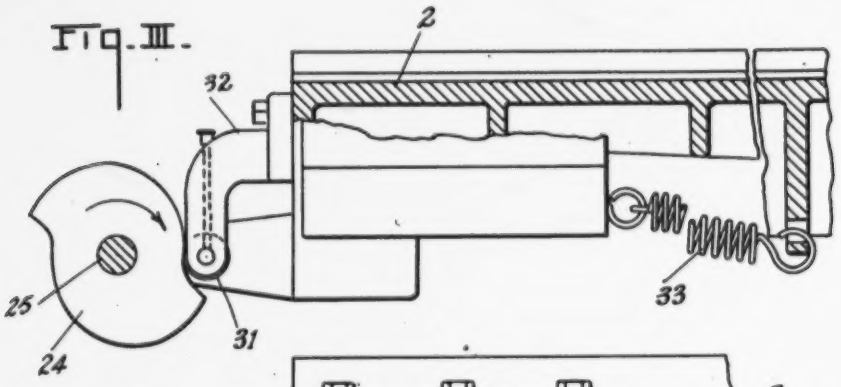

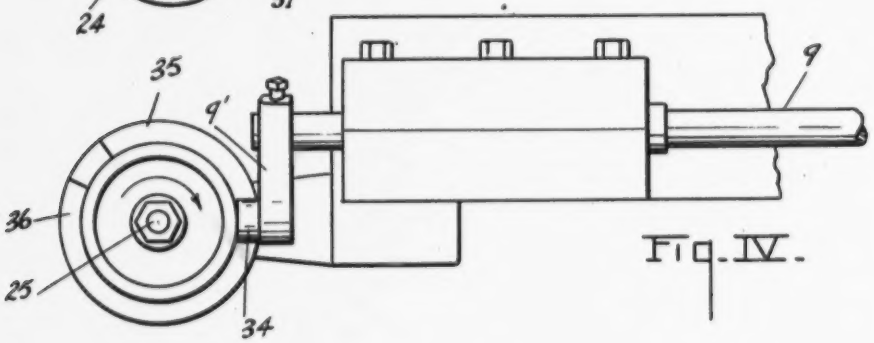

Fig. IV.

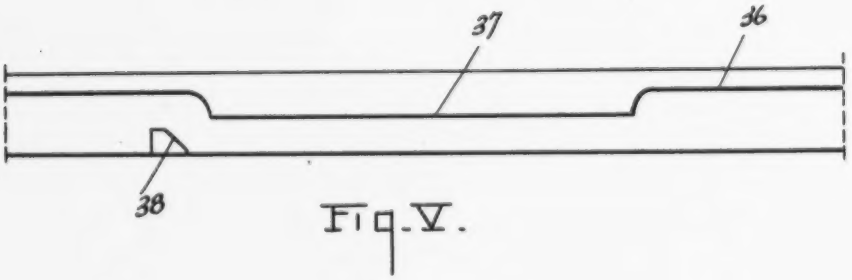

Fig. V.

Inventor
Herman W. Melling

By Chappell & Earl

Attorneys

Oct. 28, 1924. 1,512,995 1642

H. W. MELLING

LATHE

Filed Feb. 27, 1923 3 Sheets-Sheet 3

Fig. VI.

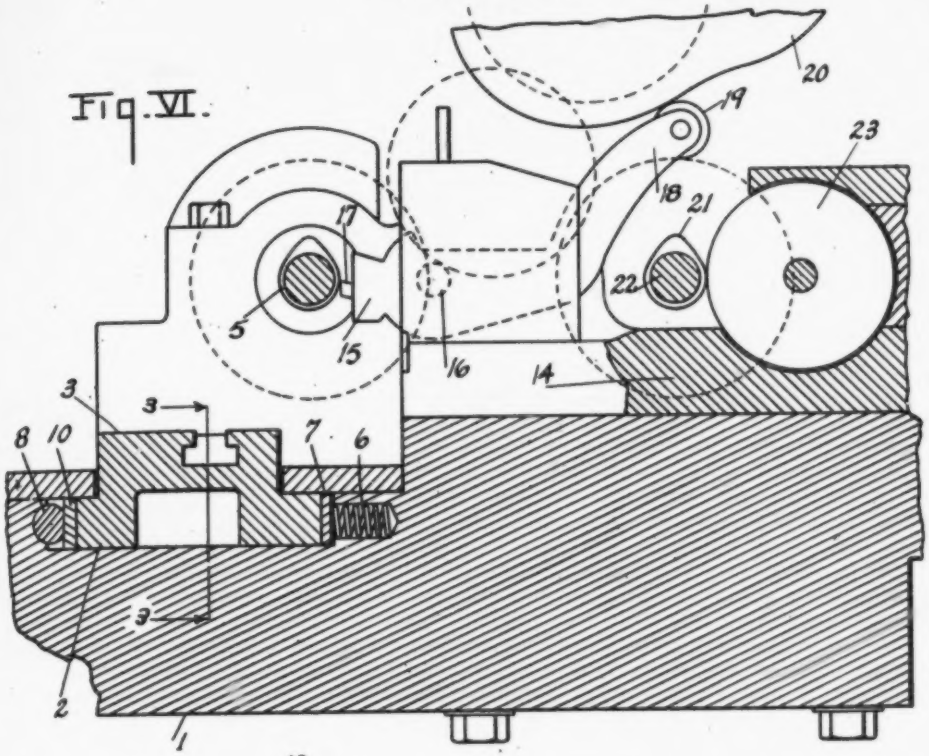

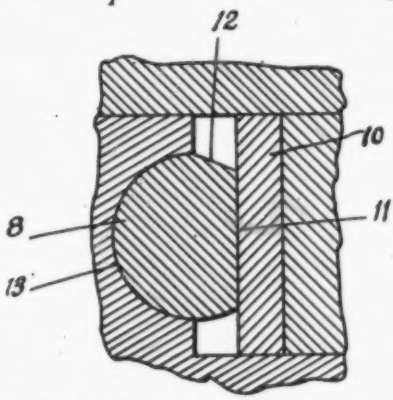

Fig. VII.

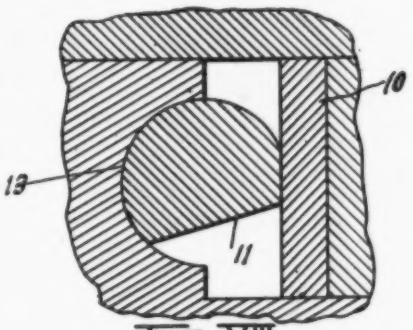

Fig. VIII.

Inventor
Herman W. Melling

By Chappell & Earl

Attorneys

Patented Oct. 28, 1924. 1,512,995

UNITED STATES PATENT OFFICE.

HERMAN W. MELLING, OF JACKSON, MICHIGAN.

LATHE.

Application filed February 27, 1923. Serial No. 621,502.

To all whom it may concern:

Be it known that I, HERMAN W. MELLING, a citizen of the United States, residing at the city and county of Jackson, State of Michigan, have invented certain new and useful Improvements in Lathes, of which the following is a specification.

This invention relates to improvements in lathes.

My improvements are especially designed by me for embodiment in lathes for turning cam shafts such as shown in my application for Letters Patent filed October 13, 1920, Serial No. 416,750 this application being in part a continuation thereof. I have illustrated and described the same herein as embodied in such machines although my improvements are readily adapted and desirable for use in machines performing other work.

The main objects of this invention are:

First, to provide an improved lathe which automatically takes a roughing and finishing cut.

Second, to provide an improved lathe embodying these advantages of taking and roughing and finishing cut which is simple and very rigid in structure so that the parts are effectively held in both positions.

Third, to provide an improved lathe in which the work carriage is laterally adjustable to regulate the depth of cut.

Further objects, and objects pertaining to details and economies of construction and operation will definitely appear from the detailed description to follow.

I accomplish the objects of my invention by the devices and means described in the following specification. The invention is clearly defined and pointed out in the claims.

A structure which is a preferred embodiment of my invention is clearly illustrated in the accompanying drawing forming a part of this application, in which;

Fig. I is a fragmentary plan view of a lathe for turning cam shafts embodying the features of my invention, parts being shown conventionally and parts broken away for convenience in illustration.

Fig. II is a fragmentary perspective view of the left front corner of the machine showing the carriage feed and adjustment.

Fig. III is a fragmentary vertical section in section on a line corresponding to line 3—3 of Figs. I and VI showing details of the carriage feed.

Fig. IV is a fragmentary front elevation view showing details of the carriage adjustment.

Fig. V is a view of the carriage adjustment cam extended.

Fig. VI is a detail vertical section on a line corresponding to the broken line 6—6 of Fig. I.

Fig. VII is an enlarged fragmentary section corresponding to that of Fig. VI showing the work carriage adjusting cam in its neutral or initial position.

Fig. VIII is a fragmentary section corresponding to that of Fig. VII showing the work carriage adjustment cam in its first or roughing cut position.

In the drawing the sectional views are taken looking in the direction of the little arrows at the ends of the section lines and similar numerals of reference refer to similar parts throughout the several views.

Referring to the drawing, the bed 1 is provided with a suitable way 2 for the work carriage 3. The work carriage is provided with suitable chucks as 4, shown conventionally, for the work 5, a valve cam shaft being shown.

The work carriage is supported for lateral adjustment to regulate the cut, see Figs. VI, VII and VIII, the main purpose of this being to provide for a roughing cut and a finishing cut so that the work may be finished without removing from the machine and without attention after it is once arranged in the chucks.

The springs 6 urge the carriage forward, wear plates 7 being interposed between the carriage and these springs, the springs being seated in recesses in the bed as shown in Fig. VI.

The carriage is adjusted against the tension of these springs by means of cams 8 on the rockshaft 9, wear or thrust plates 10 being interposed between the carriage and these cams. The cams have a flattened surface 11 which allows the carriage to return to neutral position, a face 12 which adjusts the carriage for the roughing cut and a face 13 which supports the carriage for the finish cut.

I have not in the accompanying drawing

OVERSIZE PAGE – SEE NEXT FRAME
FOR REMAINDER OF PAGE

Patented Oct. 28, 1924. 1,512,995

UNITED STATES PATENT OFFICE.

HERMAN W. MELLING, OF JACKSON, MICHIGAN.

LATHE.

Application filed February 27, 1923. Serial No. 621,503.

To all whom it may concern:

Be it known that I, HERMAN W. MELLING, a citizen of the United States, residing at the city and county of Jackson, State of Michigan, have invented certain new and useful Improvements in Lathes, of which the following is a specification.

This invention relates to improvements in lathes.

My improvements are especially designed by me for embodiment in lathes for turning cam shafts such as shown in my application for Letters Patent filed October 13, 1920, Serial No. 416,750 this application being in part a continuation thereof. I have illustrated and described the same herein as embodied in such machines although my improvements are readily adapted and desirable for use in machines performing other work.

The main objects of this invention are:

First, to provide an improved lathe which automatically takes a roughing and finishing cut.

Second, to provide an improved lathe embodying these advantages of taking and roughing and finishing cut which is simple and very rigid in structure so that the parts are effectively held in both positions.

Third, to provide an improved lathe in which the work carriage is laterally adjustable to regulate the depth of cut.

Further objects, and objects pertaining to details and economies of construction and operation will definitely appear from the detailed description to follow.

I accomplish the objects of my invention by the devices and means described in the following specification. The invention is clearly defined and pointed out in the claims.

A structure which is a preferred embodiment of my invention is clearly illustrated in the accompanying drawing forming a part of this application, in which;

Fig. I is a fragmentary plan view of a lathe for turning cam shafts embodying the features of my invention, parts being shown conventionally and parts broken away for convenience in illustration.

Fig. II is a fragmentary perspective view of the left front corner of the machine showing details of the carriage feed and adjusting mechanism.

Fig. III is a fragmentary view partially in section on a line corresponding to line 3—3 of Figs. I and VI showing details of the carriage feed.

Fig. IV is a fragmentary front elevation view showing details of the carriage adjustment.

Fig. V is a view of the carriage adjustment cam extended.

Fig. VI is a detail vertical section on a line corresponding to the broken line 6—6 of Fig. I.

Fig. VII is an enlarged fragmentary section corresponding to that of Fig. VI showing the work carriage adjusting cam in its neutral or initial position.

Fig. VIII is a fragmentary section corresponding to that of Fig. VII showing the work carriage adjustment cam in its first or roughing cut position.

In the drawing the sectional views are taken looking in the direction of the little arrows at the ends of the section lines and similar numerals of reference refer to similar parts throughout the several views.

Referring to the drawing, the bed 1 is provided with a suitable way 2 for the work carriage 3. The work carriage is provided with suitable chucks as 4, shown conventionally, for the work 5, a valve cam shaft being shown.

The work carriage is supported for lateral adjustment to regulate the cut, see Figs. VI, VII and VIII, the main purpose of this being to provide for a roughing cut and a finishing cut so that the work may be finished without removing from the machine and without attention after it is once arranged in the chucks.

The springs 6 urge the carriage forward, wear plates 7 being interposed between the carriage and these springs, the springs being seated in recesses in the bed as shown in Fig. VI.

The carriage is adjusted against the tension of these springs by means of cams 8 on the rockshaft 9, wear or thrust plates 10 being interposed between the carriage and these cams. The cams have a flattened surface 11 which allows the carriage to return to neutral position, a face 12 which adjusts the carriage for the roughing cut and a face 13 which supports the carriage for the finish cut.

I have not in the accompanying drawing attempted to maintain the relative propor-

1644

tion of parts in these views but it will be understood that the variation between these faces should be such as to provide the desired depth of cut.

I provide a tool carriage 14 having a tool holder 15 pivoted at 16 thereon, the cutter being shown at 17. This tool holder has a rearwardly and upwardly extending arm 18 carrying a roller 19 coacting with the cam 20. The movement of the tool carriage 14 is controlled by the pattern cams 21 on the shaft 22, these pattern cams corresponding in shape to the work to be cut or being replicas of the cams to be cut.

The carriage carries an abutment roller 23, the radius of which corresponds to the radius of the tool.

With the parts thus arranged, the point of contact of the cutter with the work corresponds to the point of contact of the pattern cam with the abutment, the cams 20 and 21 coacting in shaping the work as described in my application for Letters Patent hereinbefore referred to. The work and the cams 20 and 21 are driven in synchronism, the gear connections being indicated by dotted lines in Fig. VI.

The work carriage is fed in the structure illustrated by a double cam 24 mounted on the shaft 25 which is driven from a gear 26 meshing with a worm 27 on the shaft 28 which has a set of cone pulleys 29 connected with the cone pulleys 30 connected with one of the gears shown in Fig. VI, so that the parts are suitably timed and at the same time the speed of the feed may be regulated.

The cam 24 coacts with a roller 31 on an arm 32 on the carriage 2, see Fig. III, so that two feed strokes of the carriage are provided for each rotation of the shaft 25, the spring 33 returning the carriage and holding the roller 31 firmly against the cam.

The table adjusting rock shaft 9 has an arm 9' thereon provided with a roller 34 coacting with the cam 35 on the shaft 25. This cam is shown in extended form in Fig. V, and has a portion 36 and a raised portion 37, the roller travelling on the portion 36 when the rockshaft is in the position shown in Fig. VIII, and on the raised portion 37 when the cam is in the position shown in Fig. VI or in position for the finish cut. The projection 38 insures the return of the cam, a handle 39 being provided for the rockshaft to adjust it to the neutral or work-chucking position shown in Fig. VII. As the work is chucked the lever 39 is operated to bring the rockshaft to the position shown in Fig. VIII. When the roughing cut is completed the carriage is returned and the table is adjusted laterally for the second that the number of cuts and adjustments may be increased as desired.

I have illustrated and described my improvements in an embodiment which I have found very practical in the manufacture of valve cam shafts for internal combustion engines. I have not attempted to illustrate or describe other modifications and adaptations which I contemplate as these may be very considerably varied without departing from my invention, and I believe the disclosure made will enable the adaptation or embodiment of my improvements as may be desired.

Having thus described my invention what I claim as new and desire to secure by Letters Patent is:

1. In a structure of the class described, the combination of a work carriage mounted for lateral adjustment for determining the depth of cut, springs urging said carriage yieldingly outward, a rockshaft having cams for laterally adjusting said carriage step by step and supporting it in its adjusted positions against the thrust of said springs, a double feed cam for said carriage, a feed return spring for said carriage, an actuating cam for said rockshaft, said feed cam and actuating cam being timed so that the actuating cam is actuated at the end of the first feed stroke of the carriage, a hand lever for adjusting said rock shaft, a tool carriage movable laterally of said work carriage, a tool carried by said tool carriage, a control cam for said tool carriage, means for retaining the position of the tool relative to the work as the work revolves, and driving means for said control cam, the work and said feed and adjusting cams.

2. In a structure of the class described, the combination of a work carriage mounted for lateral adjustment for determining the depth of cut, springs urging said carriage yieldingly outward, a rockshaft having cams for laterally adjusting said carriage step by step and supporting it in its adjusted position against the thrust of said springs, a double feed cam for said carriage, a feed return spring for said carriage, an actuating cam for said rockshaft, a hand lever for adjusting said rockshaft, a tool carriage movable laterally of said work carriage, a tool carried by said tool carriage, a control cam for said tool carriage, and means for maintaining the position of the tool relative to the work as the work revolves.

3. In a structure of the class described, the combination of a work carriage mounted for lateral adjustment for determining the depth of cut, springs urging said carriage yieldingly outward, a rockshaft having cams for laterally adjusting said carriage step by step and supporting it in its adjust

OVERSIZE PAGE – SEE NEXT FRAME
FOR REMAINDER OF PAGE

tion of parts in these views but it will be understood that the variation between these faces should be such as to provide the desired depth of cut.

I provide a tool carriage 14 having a tool holder 16 pivoted at 16' thereon, the cutter being shown at 17. This tool holder has a rearwardly and upwardly extending arm 18 carrying a roller 19 coacting with the cam 20. The movement of the tool carriage 14 is controlled by the pattern cams 21 on the shaft 22, these pattern cams corresponding in shape to the work to be cut or being replicas of the cams to be cut.

The carriage carries an abutment roller 23, the radius of which corresponds to the radius of the tool.

With the parts thus arranged, the point of contact of the cutter with the work corresponds to the point of contact of the pattern cam with the abutment, the cams 20 and 21 coacting in shaping the work as described in my application for Letters Patent hereinbefore referred to. The work and the cams 20 and 21 are driven in synchronism, the gear connections being indicated by dotted lines in Fig. VI.

The work carriage is fed in the structure illustrated by a double cam 24 mounted on the shaft 25 which is driven from a gear 26 meshing with a worm 27 on the shaft 28 which has a set of cone pulleys 29 connected with the cone pulleys 30 connected with one of the gears shown in Fig. VI, so that the parts are suitably timed and at the same time the speed of the feed may be regulated.

The cam 24 coacts with a roller 31 on an arm 32 on the carriage 2, see Fig. III, so that two feed strokes of the carriage are provided for each rotation of the shaft 25, the spring 33 returning the carriage and holding the roller 31 firmly against the cam.

The table adjusting rock shaft 9 has an arm 9' thereon provided with a roller 34 coacting with the cam 35 on the shaft 25. This cam is shown in extended form in Fig. V, and has a portion 36 and a raised portion 37, the roller travelling on the portion 36 when the rockshaft is in the position shown in Fig. VIII, and on the raised portion 37 when the cam is in the position shown in Fig. VI or in position for the finish cut. The projection 38 insures the return of the cam, a handle 39 being provided for the rockshaft to adjust it to the neutral or work-chucking position shown in Fig. VII. As the work is chucked the lever 39 is operated to bring the rockshaft to the position shown in Fig. VIII. When the roughing cut is completed the carriage is returned and the table is adjusted laterally for the second or finishing cut.

While I provide for only two cuts in this machine illustrated, it will be understood that the number of cuts and adjustments may be increased as desired.

I have illustrated and described my improvements in an embodiment which I have found very practical in the manufacture of valve cam shafts for internal combustion engines. I have not attempted to illustrate or describe other modifications and adaptations which I contemplate as these may be very considerably varied without departing from my invention, and I believe the disclosure made will enable the adaptation or embodiment of my improvements as may be desired.

Having thus described my invention what I claim as new and desire to secure by Letters Patent is:

1. In a structure of the class described, the combination of a work carriage mounted for lateral adjustment for determining the depth of cut, springs urging said carriage yieldingly outward, a rockshaft having cams for laterally adjusting said carriage step by step and supporting it in its adjusted positions against the thrust of said springs, a double feed cam for said carriage, a feed return spring for said carriage, an actuating cam for said rockshaft, said feed cam and actuating cam being timed so that the actuating cam is actuated at the end of the first feed stroke of the carriage, a hand lever for adjusting said rock shaft, a tool carriage movable laterally of said work carriage, a tool carried by said tool carriage, a control cam for said tool carriage, means for retaining the position of the tool relative to the work as the work revolves, and driving means for said control cam, the work and said feed and adjusting cams.

2. In a structure of the class described, the combination of a work carriage mounted for lateral adjustment for determining the depth of cut, springs urging said carriage yieldingly outward, a rockshaft having cams for laterally adjusting said carriage step by step and supporting it in its adjusted position against the thrust of said springs, a double feed cam for said carriage, a feed return spring for said carriage, an actuating cam for said rockshaft, a hand lever for adjusting said rockshaft, a tool carriage movable laterally of said work carriage, a tool carried by said tool carriage, a control cam for said tool carriage, and means for maintaining the position of the tool relative to the work as the work revolves.

3. In a structure of the class described, the combination of a work carriage mounted for lateral adjustment for determining the depth of cut, springs urging said carriage yieldingly outward, a rockshaft having cams for laterally adjusting said carriage step by step and supporting it in its adjusted positions against the thrust of said springs, a feed means for said carriage providing a

plurality of feed strokes, an actuating cam for said rockshaft timed with said feed means, a tool carriage movable laterally of said work carriage, a tool carried by said tool carriage, a control means for said tool carriage, and means for maintaining the position of the tool relative to the work as the work revolves.

4. In a structure of the class described, the combination of a work carriage mounted for lateral adjustment for determining the depth of cut, a rock shaft having cams for laterally adjusting said carriage step by step, a feed means for said carriage providing a plurality of feed strokes, an actuating cam for said rock shaft timed with said feed means, a tool carriage movable laterally of said work carriage, a tool carried by said tool carriage, a control means for said tool carriage, and means for maintaining the position of the tool relative to the work as the work revolves.

5. In a structure of the class described, the combination of a work carriage mounted for lateral adjustment for determining the depth of cut, a feed means for said carriage providing a plurality of feed strokes, an actuating means for said feed adjusting means timed with said feed means, a tool carriage movable laterally of said work carriage, a tool carried by said tool carriage, a control means for said tool carriage, and means for maintaining the position of the tool relative to the work.

6. In a structure of the class described, the combination of a reciprocating tool carriage, a tool holder pivotally mounted on said tool carriage, a tool carriage control cam which is a replica of the work to be cut, a cam for oscillating said tool holder whereby the reciprocation of the tool carriage and the oscillation of the tool thereon coact in shaping the work, a work carriage reciprocating in a path at right angles to the path of the tool carriage, said work carriage being mounted for lateral adjustment to determine the depth of cut, means for laterally adjusting said work carriage, work carriage feed means comprising an automatic return means whereby successive cuts are secured, and operating connections for said carriage adjusting and feed means and feed tool carriage and tool control cams whereby the movement of the several parts is synchronized.

7. In a structure of the class described, the combination of a reciprocating tool carriage, a tool holder pivotally mounted on said tool carriage, a tool carriage control cam which is a replica of the work to be cut, a cam for oscillating said tool holder whereby the reciprocation of the tool carriage and the oscillation of the tool thereon coact in shaping the work, a work carriage reciprocating in a path at right angles to the path of the tool carriage, said work carriage being mounted for lateral adjustment to determine the depth of cut, and means for laterally adjusting said work carriage.

8. In a structure of the class described, the combination of a reciprocating tool carriage, a work carriage reciprocating in a path at right angles to the path of the tool carriage, said work carriage being mounted for lateral adjustment to determine the depth of cut, means for laterally adjusting said work carriage, work carriage feed means comprising an automatic return means whereby successive cuts are secured, and operating connections for said carriage adjusting and feed means and feed tool carriage and tool control cams whereby the movement of the several parts is synchronized.

9. In a structure of the class described, the combination of a work carriage mounted for lateral adjustment for determining the depth of cut, springs urging said carriage yieldingly outward, a rockshaft having cams for laterally adjusting said carriage step by step and supporting it in its adjusted positions against the thrust of said springs, a double feed cam for said carriage, a feed return spring for said carriage, an actuating cam for said rockshaft, said feed cam and actuating cam being mounted on the same shaft and timed so that the actuating cam is actuated at the end of the first feed stroke of the carriage, and a hand lever for adjusting said rock shaft.

10. In a structure of the class described, the combination of a work carriage mounted for lateral adjustment for determining the depth of cut, springs urging said carriage yieldingly outward, and a rockshaft having cams for laterally adjusting said carriage step by step and supporting it in its adjusted positions against the thrust of said springs.

11. In a structure of the class described, the combination of a reciprocating tool carriage, a tool holder pivotally mounted on said tool carriage, a pattern cam corresponding in shape to the shape of the work to be cut for controlling said tool carriage, said tool carriage being provided with an abutment with which said pattern cam coacts, a cam for oscillating said tool holder so that the cutting edge of the tool engages the work at a point corresponding to the point of contact of the pattern cam with its abutment, a work carriage mounted for lateral adjustment to determine the depth of cut, feed means therefor comprising a double cam and a return spring whereby successive cuts are secured, a cam for laterally adjusting said carriage, and means for simultaneously operating said tool carriage control and said tool oscillating cams and

OVERSIZE PAGE – SEE NEXT FRAME
FOR REMAINDER OF PAGE

plurality of feed strokes, an actuating cam for said rockshaft timed with said feed means, a tool carriage movable laterally of said work carriage, a tool carried by said tool carriage, a control means for said tool carriage, and means for maintaining the position of the tool relative to the work as the work revolves.

4. In a structure of the class described, the combination of a work carriage mounted for lateral adjustment for determining the depth of cut, a rock shaft having cams for laterally adjusting said carriage step by step, a feed means for said carriage providing a plurality of feed strokes, an actuating cam for said rock shaft timed with said feed means, a tool carriage movable laterally of said work carriage, a tool carried by said tool carriage, a control means for said tool carriage, and means for maintaining the position of the tool relative to the work as the work revolves.

5. In a structure of the class described, the combination of a work carriage mounted for lateral adjustment for determining the depth of cut, a feed means for said carriage providing a plurality of feed strokes, an actuating means for said feed adjusting means timed with said feed means, a tool carriage movable laterally of said work carriage, a tool carried by said tool carriage, a control means for said tool carriage, and means for maintaining the position of the tool relative to the work.

6. In a structure of the class described, the combination of a reciprocating tool carriage, a tool holder pivotally mounted on said tool carriage, a tool carriage control cam which is a replica of the work to be cut, a cam for oscillating said tool holder whereby the reciprocation of the tool carriage and the oscillation of the tool thereon coact in shaping the work, a work carriage reciprocating in a path at right angles to the path of the tool carriage, said work carriage being mounted for lateral adjustment to determine the depth of cut, means for laterally adjusting said work carriage, work carriage feed means comprising an automatic return means whereby successive cuts are secured, and operating connections for said carriage adjusting and feed means and feed tool carriage and tool control cams whereby the movement of the several parts is synchronized.

7. In a structure of the class described, the combination of a reciprocating tool carriage, a tool holder pivotally mounted on said tool carriage, a tool carriage control cam which is a replica of the work to be cut, a cam for oscillating said tool holder whereby the reciprocation of the tool carriage and the oscillation of the tool thereon coact in shaping the work, a work carriage reciprocating in a path at right angles to the path of the tool carriage, said work carriage being mounted for lateral adjustment to determine the depth of cut, and means for laterally adjusting said work carriage.

8. In a structure of the class described, the combination of a reciprocating tool carriage, a work carriage reciprocating in a path at right angles to the path of the tool carriage, said work carriage being mounted for lateral adjustment to determine the depth of cut, means for laterally adjusting said work carriage, work carriage feed means comprising an automatic return means whereby successive cuts are secured, and operating connections for said carriage adjusting and feed means and feed tool carriage and tool control cams whereby the movement of the several parts is synchronized.

9. In a structure of the class described, the combination of a work carriage mounted for lateral adjustment for determining the depth of cut, springs urging said carriage yieldingly outward, a rockshaft having cams for laterally adjusting said carriage step by step and supporting it in its adjusted positions against the thrust of said springs, a double feed cam for said carriage, a feed return spring for said carriage, an actuating cam for said rockshaft, said feed cam and actuating cam being mounted on the same shaft and timed so that the actuating cam is actuated at the end of the first feed stroke of the carriage, and a hand lever for adjusting said rock shaft.

10. In a structure of the class described, the combination of a work carriage mounted for lateral adjustment for determining the depth of cut, springs urging said carriage yieldingly outward, and a rockshaft having cams for laterally adjusting said carriage step by step and supporting it in its adjusted positions against the thrust of said springs.

11. In a structure of the class described, the combination of a reciprocating tool carriage, a tool holder pivotally mounted on said tool carriage, a pattern cam corresponding in shape to the shape of the work to be cut for controlling said tool carriage, said tool carriage being provided with an abutment with which said pattern cam coacts, a cam for oscillating said tool holder so that the cutting edge of the tool engages the work at a point corresponding to the point of contact of the pattern cam with its abutment, a work carriage mounted for lateral adjustment to determine the depth of cut, feed means therefor comprising a double cam and a return spring whereby successive cuts are secured, a cam for laterally adjusting said carriage, and means for simultaneously operating said tool carriage control and said tool oscillating cams and

said work carriage feed and adjusting cams.

12. In a structure of the class described, the combination of a reciprocating tool carriage, a tool holder pivotally mounted on said tool carriage, a control cam for said tool carriage, a cam for oscillating said tool holder, a work carriage mounted for lateral adjustment to determine the depth of cut, feed means therefor comprising a double cam and return spring whereby successive cuts are secured, a cam for laterally adjusting said carriage, and operating connections for said several cams.

13. In a structure of the class described, the combination with a tool, of a work carriage mounted for lateral adjustment for determining the depth of cut, a spring urging said carriage yieldingly outward, a cam for laterally adjusting said carriage step by step and supporting it in its adjusted position against the thrust of said spring, and a feed means for said carriage providing a plurality of cuts.

14. In a structure of the class described, the combination with a tool, of a work carriage mounted for lateral adjustment for determining the depth of cut, a spring urging said carriage yieldingly outward, a cam for laterally adjusting said carriage step by step and supporting it in its adjusted position against the thrust of said spring, a feed cam for said carriage, a feed return spring for said carriage, and an actuating cam for said adjusting cam, said carriage, said cam and actuating cam being timed, for the purpose specified.

15. In a structure of the class described, the combination with a tool, of a work carriage mounted for lateral adjustment for determining the depth of cut, a spring urging said carriage yieldingly outward, and a cam for laterally adjusting said carriage step by step and supporting it in its adjusted position against the thrust of said spring.

16. In a structure of the class described, the combination with a tool, of a way, a work carriage mounted on said way for lateral adjustment for determining the depth of cut and for longitudinal feeding movement, means for effecting such lateral adjustment step by step, feed means for said carriage comprising automatic return means thereby providing a plurality of cuts, and operating connections for said carriage adjusting and feed means whereby the carriage is adjusted for the successive cuts.

17. In a structure of the class described, the combination with a tool, of a way, a work carriage mounted on said way for lateral adjustment for determining the depth of cut and for longitudinal feeding movement, means for effecting such lateral adjustment step by step, and feed means for said carriage comprising automatic return means thereby providing a plurality of cuts.

18. In a structure of the class described, the combination with a tool, of a way, a work carriage mounted on said way for lateral adjustment for determining the depth of cut and for longitudinal feeding movement, means for effecting such lateral adjustment, feed means for said carriage, and operating connections for said carriage adjusting and feed means whereby the carriage is automatically adjusted for the successive cuts.

19. In a structure of the class described, the combination with a tool, of a way, a work carriage mounted on said way for lateral adjustment for determining the depth of cut and for longitudinal feeding movement, means for effecting such lateral adjustment, and feed means for said carriage.

20. In a structure of the class described, the combination with a bed provided with a single carriage slideway, a carriage slidably supported on said way for lateral cut adjustment and longitudinally of said way for feeding movement, cams for laterally adjusting said carriage in said way and supporting it in its adjusted positions while permitting its feeding movement, means for automatically securing a plurality of feed strokes, and means for adjusting said cams synchronized with said feed means.

21. In a structure of the class described, the combination with a bed provided with a single carriage slideway, a carriage slidably supported on said way for lateral cut adjustment and longitudinally of said way for feeding movement, and cams for laterally adjusting said carriage in said way and supporting it in its adjusted positions while permitting its feeding movement.

22. In a structure of the class described, the combination with a bed provided with a single work carriage slideway, a tool, a carriage mounted in said way for feeding movement and for cut adjusting movement laterally of said feeding movement, means for providing a plurality of cut adjustments for said carriage and supporting it for feeding movement in its adjusted position, feed means for said carriage, and operating connections for said cut adjusting means and said carriage feed means.

23. In a structure of the class described, the combination with a bed provided with a single carriage slideway, a carriage mounted in said way for feeding movement and for cut adjusting movement laterally of said feeding movement, means for providing a plurality of cut adjustments for said carriage and supporting it for feeding movement in any of its adjusted positions, and feed means for said carriage.

24. In a structure of the class described, the combination of a carriage, a single way in which said carriage is mounted for feeding movement and for adjustment

OVERSIZE PAGE – SEE NEXT FRAME
FOR REMAINDER OF PAGE

said work carriage feed and adjusting cams.

12. In a structure of the class described, the combination of a reciprocating tool carriage, a tool holder pivotally mounted on said tool carriage, a control cam for said tool carriage, a cam for oscillating said tool holder, a work carriage mounted for lateral adjustment to determine the depth of cut, feed means therefor comprising a double cam and return spring whereby successive cuts are secured, a cam for laterally adjusting said carriage, and operating connections for said several cams.

13. In a structure of the class described, the combination with a tool, of a work carriage mounted for lateral adjustment for determining the depth of cut, a spring urging said carriage yieldingly outward, a cam for laterally adjusting said carriage step by step and supporting it in its adjusted position against the thrust of said spring, and a feed means for said carriage providing a plurality of cuts.

14. In a structure of the class described, the combination with a tool, of a work carriage mounted for lateral adjustment for determining the depth of cut, a spring urging said carriage yieldingly outward, a cam for laterally adjusting said carriage step by step and supporting it in its adjusted position against the thrust of said spring, a feed cam for said carriage, a feed return spring for said carriage, and an actuating cam for said adjusting cam, said carriage, said cam and actuating cam being timed, for the purpose specified.

15. In a structure of the class described, the combination with a tool, of a work carriage mounted for lateral adjustment for determining the depth of cut, a spring urging said carriage yieldingly outward, and a cam for laterally adjusting said carriage step by step and supporting it in its adjusted position against the thrust of said spring.

16. In a structure of the class described, the combination with a tool, of a way, a work carriage mounted on said way for lateral adjustment for determining the depth of cut and for longitudinal feeding movement, means for effecting such lateral adjustment step by step, feed means for said carriage comprising automatic return means thereby providing a plurality of cuts, and operating connections for said carriage adjusting and feed means whereby the carriage is adjusted for the successive cuts.

17. In a structure of the class described, the combination with a tool, of a way, a work carriage mounted on said way for lateral adjustment for determining the depth of cut and for longitudinal feeding movement, means for effecting such lateral adjustment step by step, and feed means for said carriage comprising automatic return means thereby providing a plurality of cuts.

18. In a structure of the class described, the combination with a tool, of a way, a work carriage mounted on said way for lateral adjustment for determining the depth of cut and for longitudinal feeding movement, means for effecting such lateral adjustment, feed means for said carriage, and operating connections for said carriage adjusting and feed means whereby the carriage is automatically adjusted for the successive cuts.

19. In a structure of the class described, the combination with a tool, of a way, a work carriage mounted on said way for lateral adjustment for determining the depth of cut and for longitudinal feeding movement, means for effecting such lateral adjustment, and feed means for said carriage.

20. In a structure of the class described, the combination with a bed provided with a single carriage slideway, a carriage slidably supported on said way for lateral cut adjustment and longitudinally of said way for feeding movement, cams for laterally adjusting said carriage in said way and supporting it in its adjusted positions while permitting its feeding movement, means for automatically securing a plurality of feed strokes, and means for adjusting said cams synchronized with said feed means.

21. In a structure of the class described, the combination with a bed provided with a single carriage slideway, a carriage slidably supported on said way for lateral cut adjustment and longitudinally of said way for feeding movement, and cams for laterally adjusting said carriage in said way and supporting it in its adjusted positions while permitting its feeding movement.

22. In a structure of the class described, the combination with a bed provided with a single work carriage slideway, a tool, a carriage mounted in said way for feeding movement and for cut adjusting movement laterally of said feeding movement, means for providing a plurality of cut adjustments for said carriage and supporting it for feeding movement in its adjusted position, feed means for said carriage, and operating connections for said cut adjusting means and said carriage feed means.

23. In a structure of the class described, the combination with a bed provided with a single carriage slideway, a carriage mounted in said way for feeding movement and for cut adjusting movement laterally of said feeding movement, means for providing a plurality of cut adjustments for said carriage and supporting it for feeding movement in any of its adjusted positions, and feed means for said carriage.

24. In a structure of the class described, the combination of a carriage, a single way in which said carriage is mounted for feeding movement and for adjustment trans-

versely of its feeding movement to determine the depth of cut, cut adjusting means adapted to permit the feeding movement of said carriage, and carriage feed means operatively associated with said cut adjusting means.

25. In a structure of the class described, the combination of a carriage, a single way in which said carriage is mounted for feeding movement and for adjustment transversely of its feeding movement to determine the depth of cut, and cut adjusting means adapted to permit the feeding movement of said carriage and carriage feed means.

26. In a structure of the class described, the combination with a bed provided with a single work carriage slideway, a work carriage mounted on said way for longitudinally feeding movement and lateral movement to determine the depth of the cut, and a tool operatively associated with said work carriage.

27. In a structure of the class described, the combination of a carriage, and a single way in which said carriage is mounted for feeding movement and for adjustment transversely of its feeding movement to determine the depth of the cut.

In witness whereof, I have hereunto set my hand and seal.

HERMAN W. MELLING. [L. S.]

July 5, 1927.

1,634,550

H. W. MELLING

LATHE

Filed Dec. 10. 1926

3 Sheets-Sheet 1

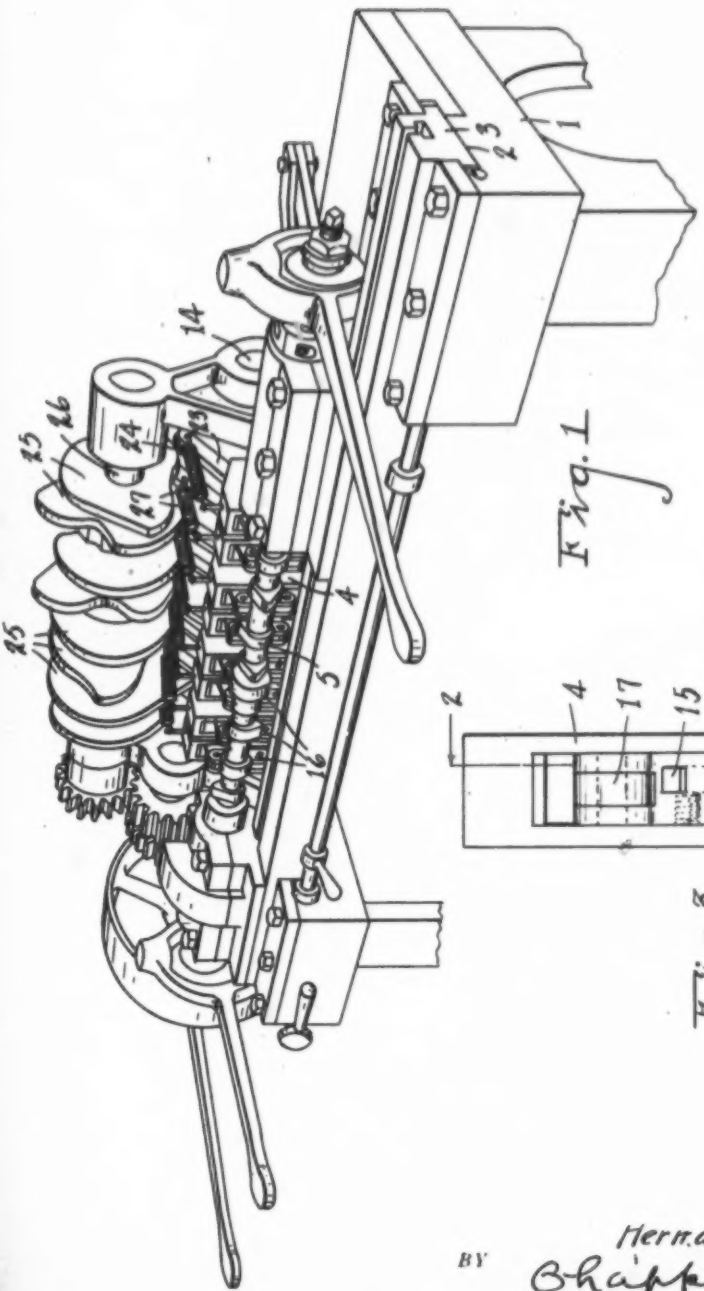

Fig. 1

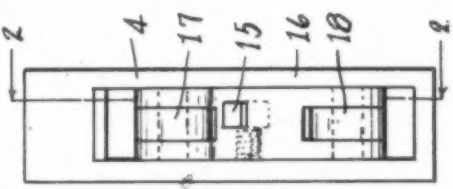

Fig. 3

INVENTOR
Herman W. Melling

BY Chappell & Earl

ATTORNEYS

OVERSIZE PAGE – SEE NEXT FRAME
FOR REMAINDER OF PAGE

July 5, 1927. 1,634,550

H. W. MELLING

LATHE

Filed Dec. 10. 1926 3 Sheets-Sheet 1

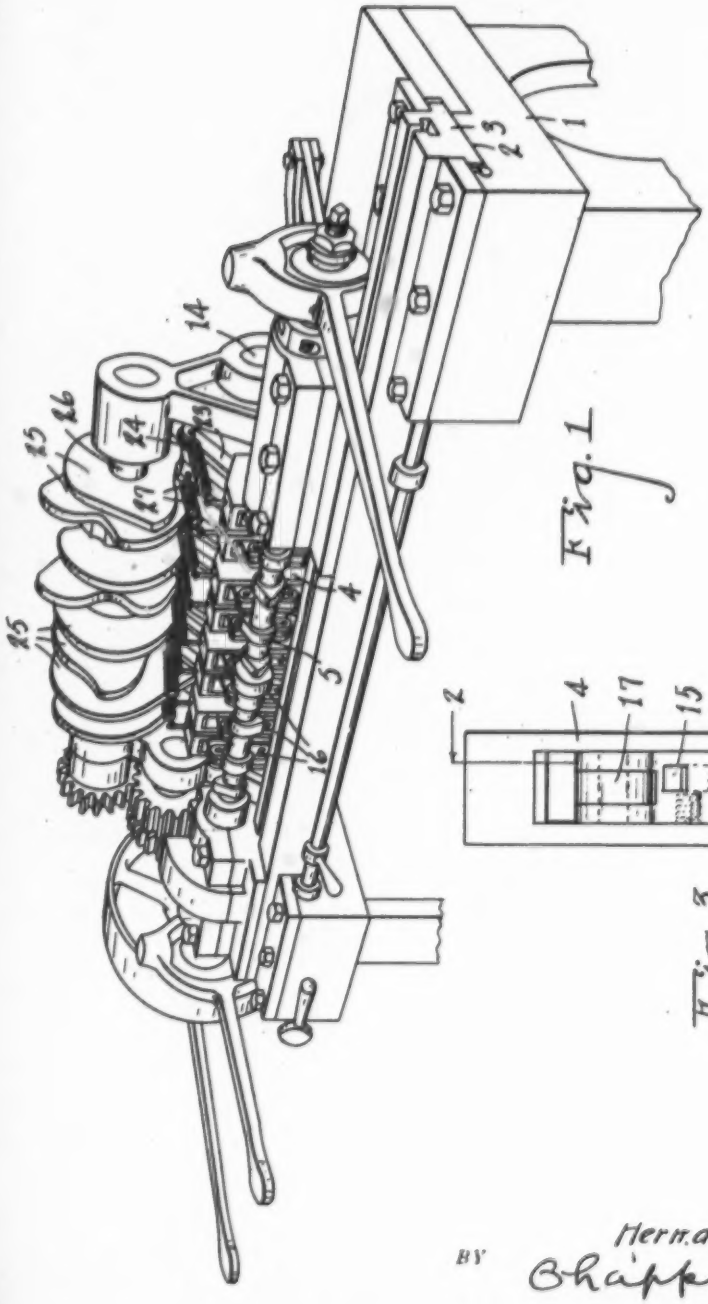

Fig. 1

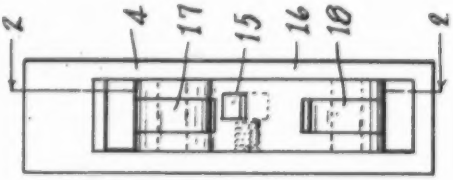

Fig. 3

INVENTOR
Herman W. Melling

BY Chappell & Earl
ATTORNEYS

DEFENDANT'S EXHIBIT NO. 313

DEFENDANT'S EXHIBIT NO. 313

July 5, 1927. 1,634,550

H. W. MELLING

LATHE

Filed Dec. 10. 1926 3 Sheets-Sheet 2

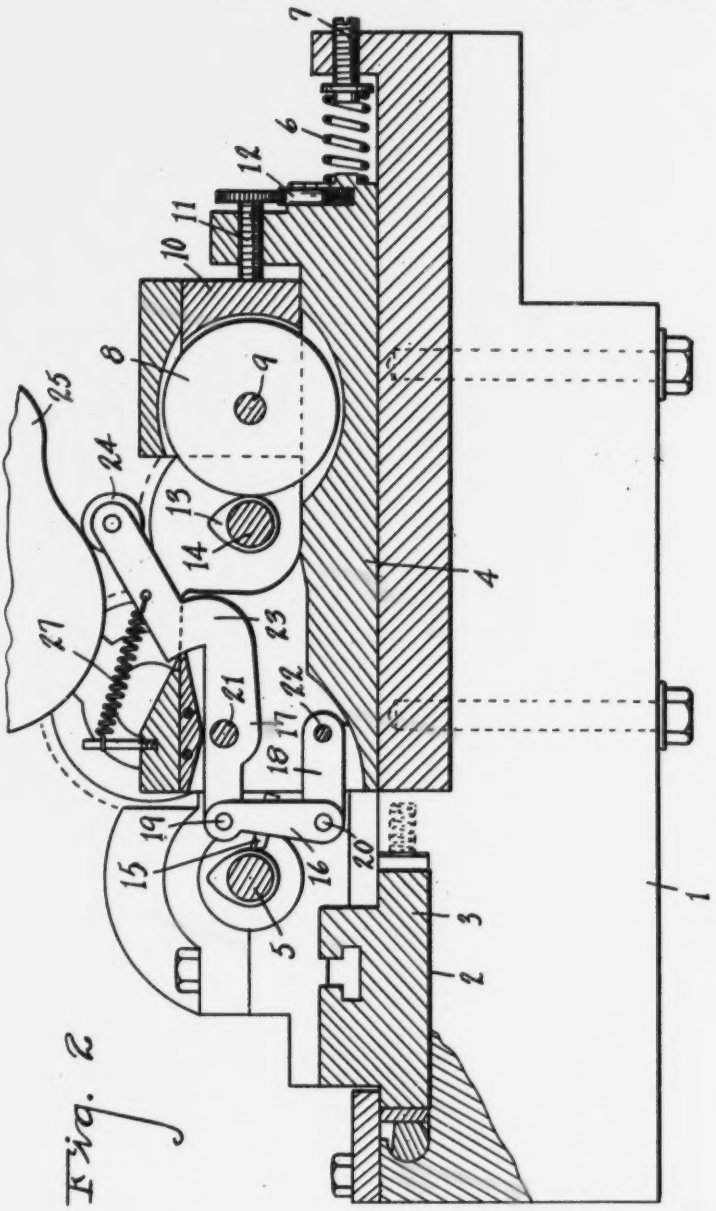

Fig. 2

INVENTOR
Herman W. Melling

BY Chappell & Earl
ATTORNEYS

July 5, 1927. 1,634,550

H. W. MELLING

LATHE

Filed Dec. 10. 1926 3 Sheets-Sheet 3

Fig. 4.

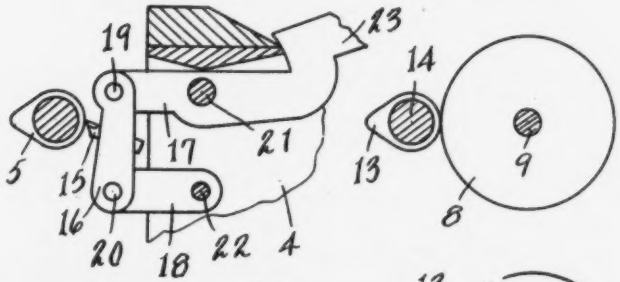

Fig. 5

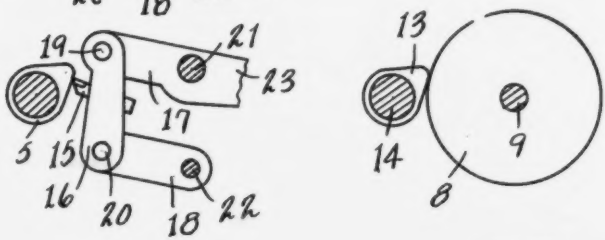

Fig. 6

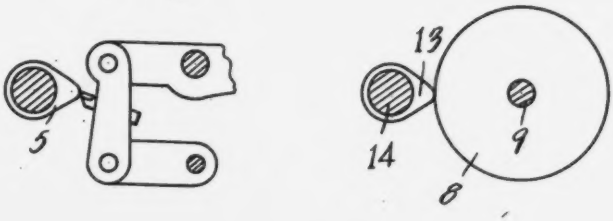

Fig. 7

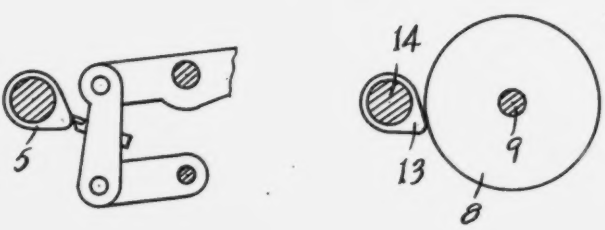

Fig. 8

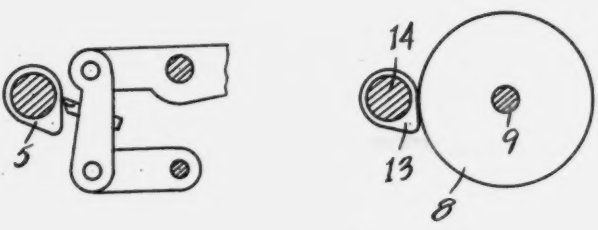

INVENTOR
Herman W. Melling
BY
Chappell & Earl
ATTORNEYS

Patented July 5, 1927. 1,634,550

UNITED STATES PATENT OFFICE.

HERMAN W. MELLING, OF JACKSON, MICHIGAN.

LATHE.

Application filed December 10, 1926. Serial No. 153,855.

My improvements relate to lathes of the class illustrated in my application for Letters Patent Serial No. 416,750, filed October 13, 1920.

The main objects of this invention are:

First to provide an improved lathe for the turning of non-circular forms such as cams.

Second, to provide an improved pattern reproducing lathe by means of which non-circular forms such as cam shafts may be rapidly and accurately reproduced.

Third, to provide an improved lathe having these advantages which is of large capacity and largely automatic in its operation.

Objects pertaining to details and economies of my invention will definitely appear from the detailed description to follow. The invention is clearly defined and pointed out in the claims.

A structure embodying the features of my invention is clearly illustrated in the accompanying drawing forming a part of this application, in which:

Fig. 1 is a detail front perspective view of a structure embodying the features of my invention.

Fig. 2 is a detail view partially in transverse section on a line corresponding to line 2—2 of Fig. 3.

Fig. 3 is a front elevation of one of the tool carriages.

Figs. 4, 5, 6, 7 and 8 are detail views illustrating the relative relation of the master cam to its coacting abutment on the tool carriage and the tool to the work in several of the positions of these parts during operation thereof.

Referring to the drawing, the bed 1 of the machine is provided with a way 2 for the work carriage 3. The work carriage is mounted on this way for longitudinal and lateral movement and carries the chuck for the work, means being provided for rotating the work and for feeding the carriage. As such means form no part of my present invention and as they are described and claimed in Letters Patent No. 1,512,995, issued to me October 28, 1924, I do not illustrate or describe the same in detail herein.

The bed of the machine is also provided with ways for a plurality of tool carriages [illegible] carriage being provided for each cam to the axis of the work 5. As the carriages are duplicates a description of one will suffice.

The carriage 4 is urged toward the work by means of the spring 6, an adjusting screw 7 being provided for adjusting the tension of the spring. The carriage is provided with an abutment roller 8, the journal 9 of which is mounted on an adjustable block 10, this block being adjusted by means of the screw 11. A spring pressed detent 12 is provided for holding the screw 11 in its adjusted position.

The abutment roller coacts with the master cam 13 which is a replica in shape of the work to be cut, for instance the structure illustrated is designed for the turning of the several cams of a cam shaft for an automobile engine. The cam 13 is one of the several cams of a cam shaft 14 which may be a cam shaft taken from stock or which is a replica of the cam shaft to be reproduced.

It will be observed that the master cam 13 controlling the reciprocation of the carriage is disposed in an opposed relation to the spring 6, that is, while the spring 6 urges the carriage to the work, the master cam reciprocates the carriage against this spring, thereby preventing the tool from taking more than a cut of the desired depth; that is, the tool cannot "hog" into the work.

The tool 15 is mounted on a holder 16 for oscillating movement in a plane transverse to the axis of the work and is non-tiltable as distinguished from the pivotally mounted tool holder of my said application for Letters Patent.

The tool holder 16 is supported by parallel links 17 and 18, the tool holder being pivoted to the outer ends of the links 17 and 18 at 19 and 20, respectively. The link 17 is pivoted on the carriage at 21 while the link 18 is pivoted on the carriage at 22.

The link 17 is provided with a rearwardly and upwardly projecting arm 23 carrying a roller 24 coacting with the cam 25, there being one of the cams 25 for each unit or tool carriage. The several cams 25 are mounted on a cam shaft 26. The spring 27 holds the roller 24 against the cam.

The cam 25 is rotated in synchronism with the rotation of the master cam 13 and the work so that the tool is oscillated or reciprocated in a plane transverse to the axis of

OVERSIZE PAGE – SEE NEXT FRAME

Patented July 5, 1927. 1,634,550

UNITED STATES PATENT OFFICE.

HERMAN W. MELLING, OF JACKSON, MICHIGAN.

LATHE.

Application filed December 10, 1926. Serial No. 153,855.

My improvements relate to lathes of the class illustrated in my application for Letters Patent Serial No. 416,750, filed October 13, 1920.

The main objects of this invention are:

First to provide an improved lathe for the turning of non-circular forms such as cams.

Second, to provide an improved pattern reproducing lathe by means of which non-circular forms such as cam shafts may be rapidly and accurately reproduced.

Third, to provide an improved lathe having these advantages which is of large capacity and largely automatic in its operation.

Objects pertaining to details and economies of my invention will definitely appear from the detailed description to follow. The invention is clearly defined and pointed out in the claims.

A structure embodying the features of my invention is clearly illustrated in the accompanying drawing forming a part of this application, in which:

Fig. 1 is a detail front perspective view of a structure embodying the features of my invention.

Fig. 2 is a detail view partially in transverse section on a line corresponding to line 2—2 of Fig. 3.

Fig. 3 is a front elevation of one of the tool carriages.

Figs. 4, 5, 6, 7 and 8 are detail views illustrating the relative relation of the master cam to its coacting abutment on the tool carriage and the tool to the work in several of the positions of these parts during operation thereof.

Referring to the drawing, the bed 1 of the machine is provided with a way 2 for the work carriage 3. The work carriage is mounted on this way for longitudinal and lateral movement and carries the chuck for the work, means being provided for rotating the work and for feeding the carriage. As such means form no part of my present invention and as they are described and claimed in Letters Patent No. 1,512,995, issued to me October 28, 1924, I do not illustrate or describe the same in detail herein.

The bed of the machine is also provided with ways for a plurality of tool carriages 4, a carriage being provided for each cam to be cut. These tool carriages 4 are mounted for reciprocating movement transversely to the axis of the work 5. As the carriages are duplicates a description of one will suffice.

The carriage 4 is urged toward the work by means of the spring 6, an adjusting screw 7 being provided for adjusting the tension of the spring. The carriage is provided with an abutment roller 8, the journal 9 of which is mounted on an adjustable block 10, this block being adjusted by means of the screw 11. A spring pressed detent 12 is provided for holding the screw 11 in its adjusted position.

The abutment roller coacts with the master cam 13 which is a replica in shape of the work to be cut, for instance the structure illustrated is designed for the turning of the several cams of a cam shaft for an automobile engine. The cam 13 is one of the several cams of a cam shaft 14 which may be a cam shaft taken from stock or which is a replica of the cam shaft to be reproduced.

It will be observed that the master cam 13 controlling the reciprocation of the carriage is disposed in an opposed relation to the spring 6, that is, while the spring 6 urges the carriage to the work, the master cam reciprocates the carriage against this spring, thereby preventing the tool from taking more than a cut of the desired depth; that is, the tool cannot "hog" into the work.

The tool 15 is mounted on a holder 16 for oscillating movement in a plane transverse to the axis of the work and is non-tiltable as distinguished from the pivotally mounted tool holder of my said application for Letters Patent.

The tool holder 16 is supported by parallel links 17 and 18, the tool holder being pivoted to the outer ends of the links 17 and 18 at 19 and 20, respectively. The link 17 is pivoted on the carriage at 21 while the link 18 is pivoted on the carriage at 22.

The link 17 is provided with a rearwardly and upwardly projecting arm 23 carrying a roller 24 coacting with the cam 25, there being one of the cams 25 for each unit or tool carriage. The several cams 25 are mounted on a cam shaft 26. The spring 27 holds the roller 24 against the cam.

The cam 25 is rotated in synchronism with the rotation of the master cam 13 and the work so that the tool is oscillated or reciprocated in a plane transverse to the axis of the work as the tool carriage is reciprocated. The cam 25 is so conformed that the point

1652

of the tool is caused to engage the work at a point corresponding to the point of contact of the master cam with the abutment roller. The links are arranged so that the radius in which the point of the tool travels corresponds to the radius of the abutment roller. The result is that work which is a replica of the pattern or master cam is produced.

In Figs. 4 to 8, inclusive, I illustrate the master cam in various positions relative to the abutment roller and also the tool in corresponding positions occupied by it. It will be observed that the point of contact of the abutment roller moves in a vertical plane as the master cam revolves. this being a plane through the axis of the abutment roller, the master cam and the work. The point of the tool is maintained in the same plane as the point of contact of the abutment roller and the work and is caused to travel or describe a path corresponding to that at the point of contact of the master cam and abutment roller, this resulting as stated in the reproduction of the pattern.

Structures embodying my improvements are of large capacity, and strong and durable, requiring a minimum of attention in operation.

Having thus described my invention what I claim as new and desire to secure by Letters Patent is:

1. In a structure of the class described, the combination of a work carriage, means for rotatably supporting the work on said carriage, a tool carriage reciprocating laterally of said work carriage, a master cam which is a replica in shape of the work to be cut, an abutment roller on said tool carriage coacting with said cam, a tool, a tool holder, a pair of links on which said tool holder is pivotally mounted on said carriage in parallel relation, one of said links being provided with an arm, a cam coacting with said arm whereby said tool holder is oscillated in a plane transverse to the axis of the work and the cutting edge of the tool in relation to the work corresponds with the point of contact of the master cam with the abutment roller, and means for driving the work and the master cam at the same speed.

2. In a structure of the class described, the combination of a work carriage, means for rotatably supporting the work on said carriage, a tool carriage reciprocating laterally of said work carriage, a master cam which is a replica in shape of the work to be cut, an abutment coacting with said cam, a tool, a tool holder, a pair of parallel supporting links on which said tool holder is pivotally mounted, means for oscillating said links whereby said tool holder is oscillated in a plane transverse to the axis of the work and the cutting edge of the tool in relation to the work corresponds with the point of contact of the master cam with the abutment, and means for driving the work and the master cam at the same speed.

3. In a structure of the class described, the combination of means for rotatably supporting the work a tool carriage provided with a cam abutment roller, a pattern cam which is a replica in shape of the work to be cut coacting with said abutment roller to reciprocate said carriage, a tool, a tool holder, a support therefor comprising a pair of parallel links pivotally mounted on said carriage, one of said links being provided with an arm, a cam coacting with said arm whereby said tool holder is oscillated transversely to the axis of the work and so that the cutting point of the tool engages the work at a point corresponding to the point of contact of the master cam with said abutment. and means for driving the work and the pattern cam in synchronism.

4. In a structure of the class described, the combination of a rotary work holder, a reciprocating tool carriage, a master cam corresponding in shape to the work to be cut, an abutment on said carriage coacting with said master cam, a tool, a tool holder non-tiltably mounted on said carriage for reciprocating movement in a plane transverse to the axis of the work, and means for reciprocating said tool holder so that the path of travel described by the cutting edge of the tool corresponds with that at the point of contact of the master cam and abutment.

5. In a structure of the class described, the combination of a rotary work holder, a reciprocating tool carriage, a master cam corresponding in shape to the work to be cut, an abutment on said carriage with which said master cam coacts, a tool, a non-tiltable tool holder mounted on said carriage for oscillating movement in a plane transverse to the plane of movement of the tool carriage, means for reciprocating said tool holder timed with the rotation of said master cam and so that the path described by the point of the tool corresponds with that of the point of contact of the master cam with the abutment, and means for rotating the work and the master cam in synchronism.

In witness whereof I have hereunto set my hand.

HERMAN W. MELLING.

NO MISSING PAGES

PUBLISHER'S NOTICE:

Pages are missing due to an error in original pagination; content is uninterrupted.

1655

June 16, 1925. 1,542,803

C. GORDON ET AL

LATHE

Filed July 19, 1920 5 Sheets-Sheet 1

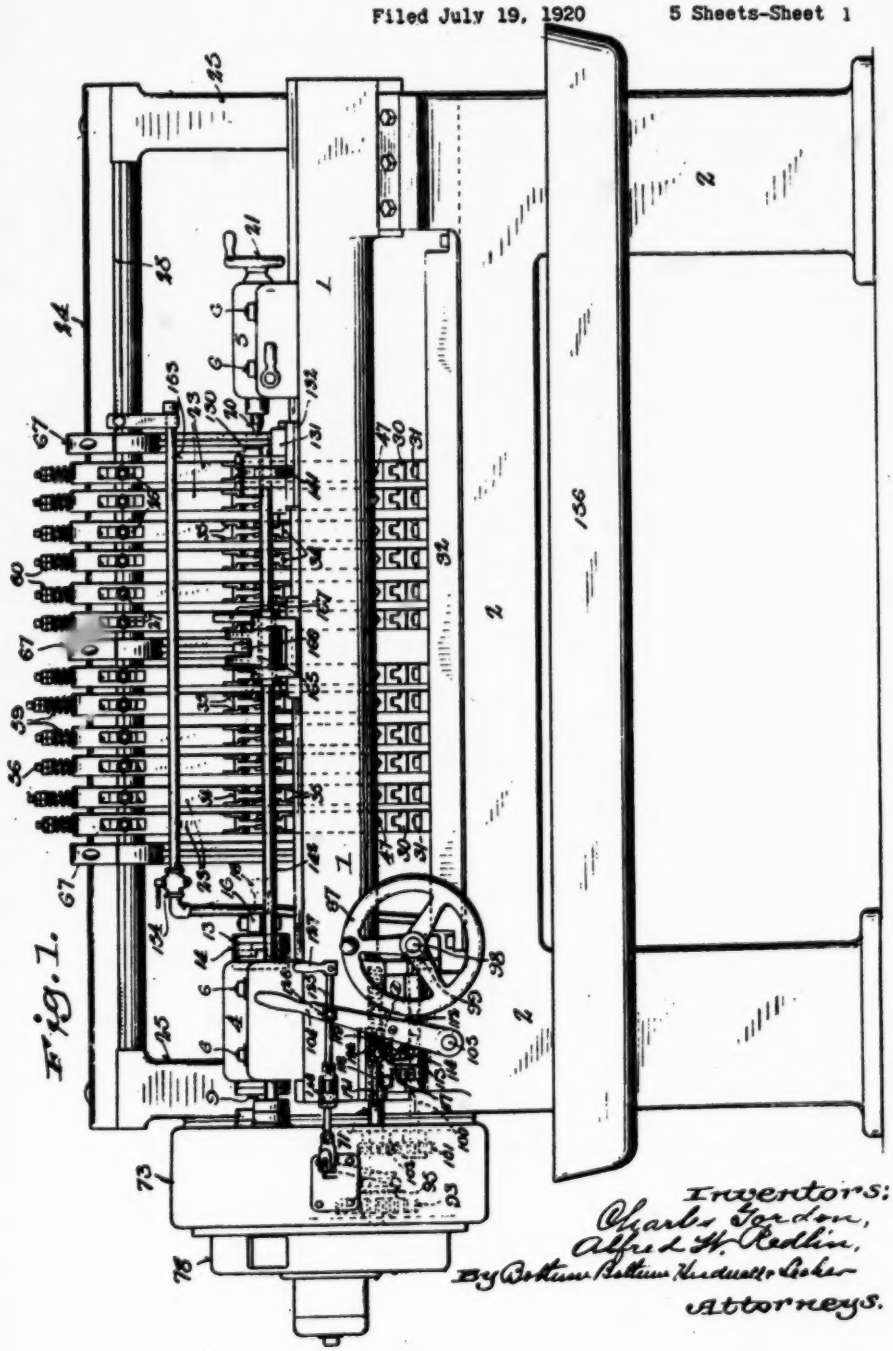

Fig. 1.

Inventors:
Charles Gordon,
Alfred W. Redlin,
By Bottum Bottum Hudwalker Coker
Attorneys.

PLAINTIFF'S EXHIBIT NO. 2

PLAINTIFF'S EXHIBIT NO. 2

June 16, 1925. 1,542,803

C. GORDON ET AL

LATHE

Filed July 19, 1920 5 Sheets-Sheet 2

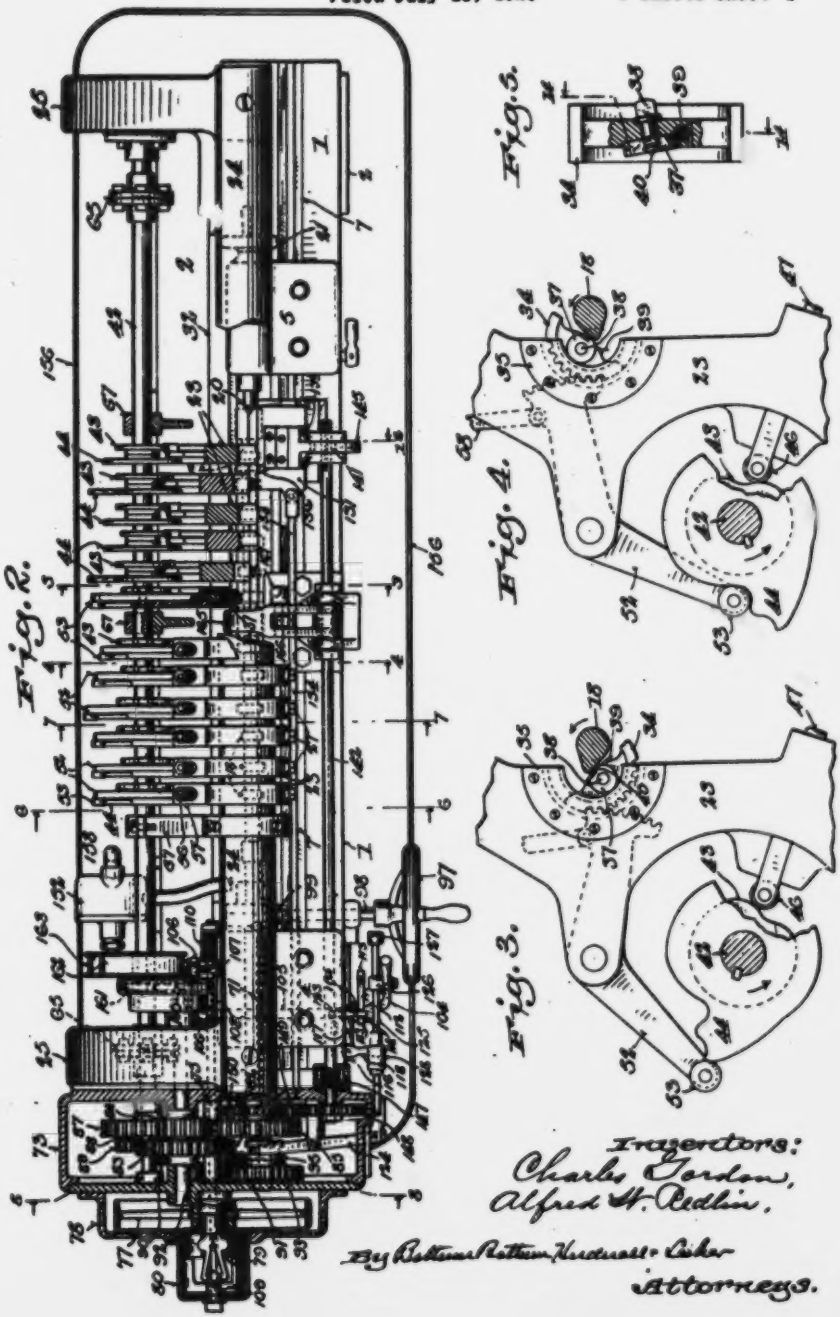

Inventors:
Charles Gordon,
Alfred W. Redlin,
By Bottum Bottum Hudnall & Fisher
Attorneys.

June 16, 1925. 1,542,803

C. GORDON ET AL

LATHE

Filed July 19, 1920 5 Sheets-Sheet 3

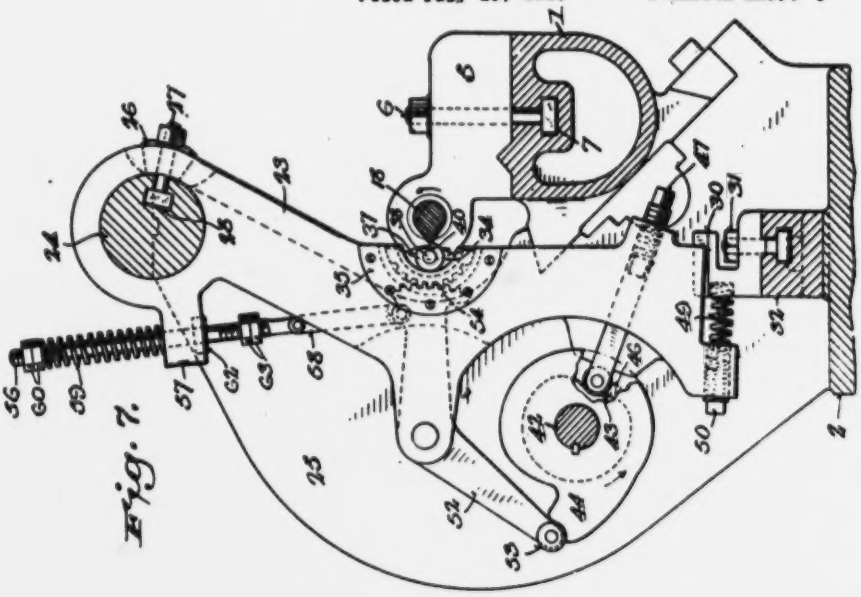

Fig. 7.

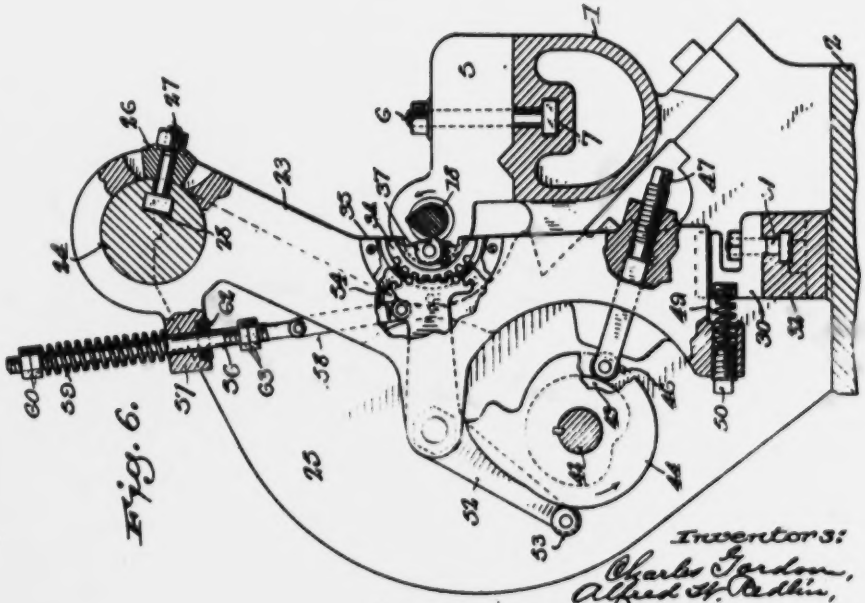

Fig. 6.

Inventors:
Charles Gordon,
Alfred W. Redlin,
By Bettner Bettner Hudnett & Locher
Attorneys.

June 16, 1925.

1,542,803

C. GORDON ET AL

LATHE

Filed July 19, 1920

5 Sheets-Sheet 4

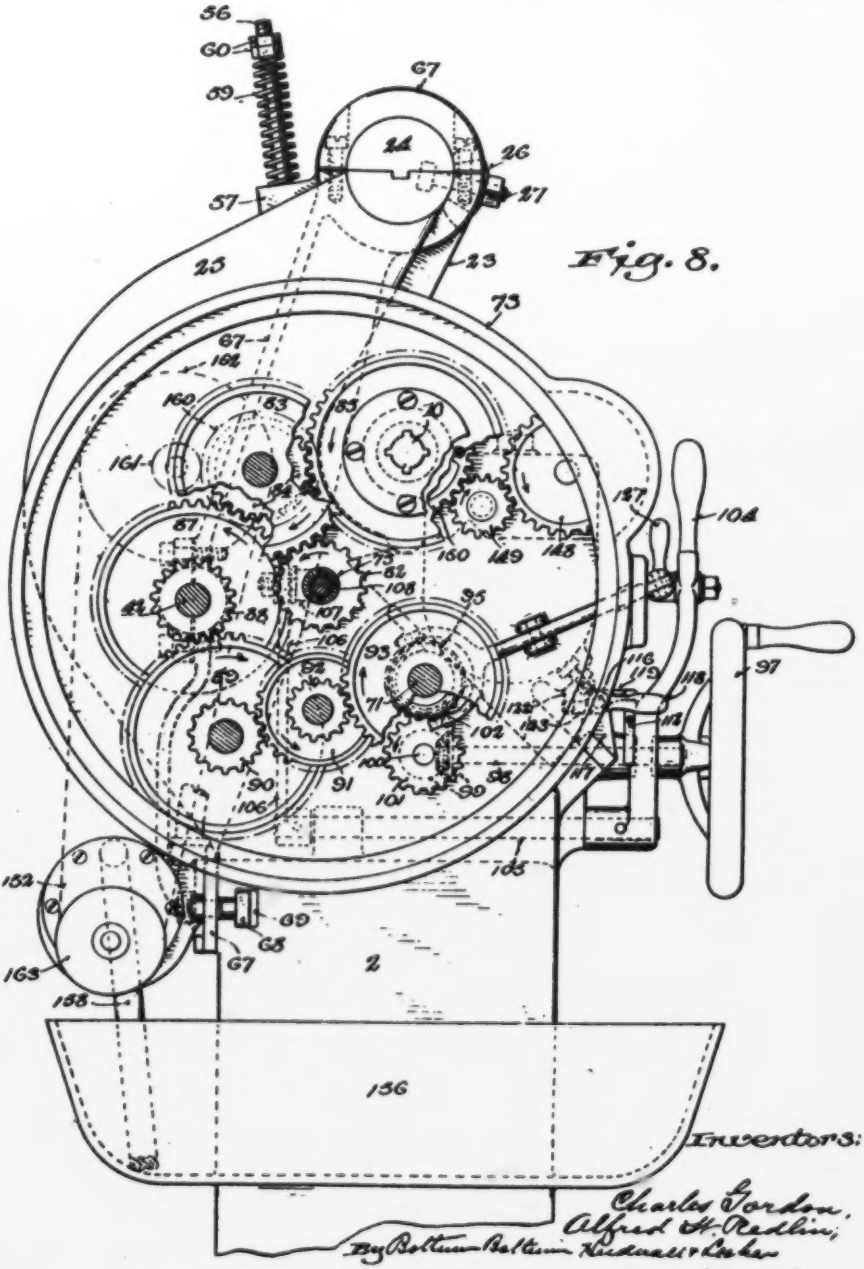

Fig. 8.

Inventors:
Charles Gordon,
Alfred H. Redlin,
By Bolton Bolton Hudnall & Coker
Attorneys.

June 16, 1925. 1,542,803

C. GORDON ET AL

LATHE

Filed July 19, 1920 5 Sheets-Sheet 5

Fig. 9.

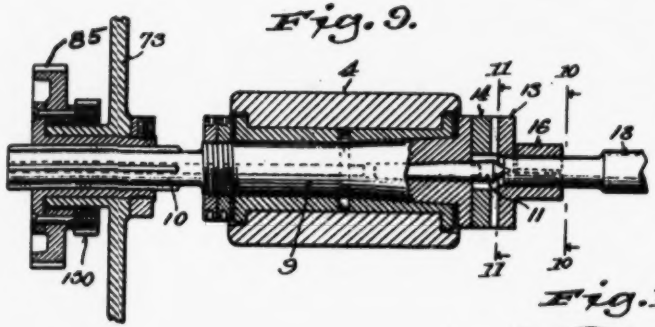

Fig. 10.

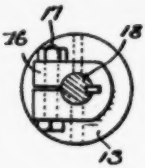

Fig. 11.

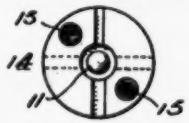

Fig. 12.

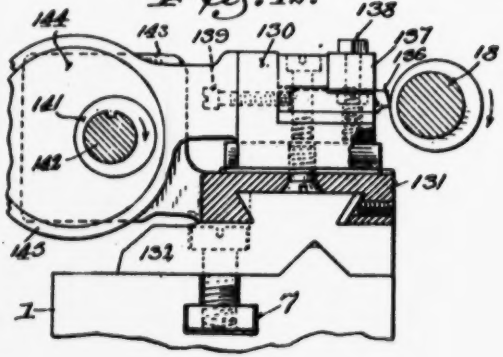

Fig. 14.

Fig. 13.

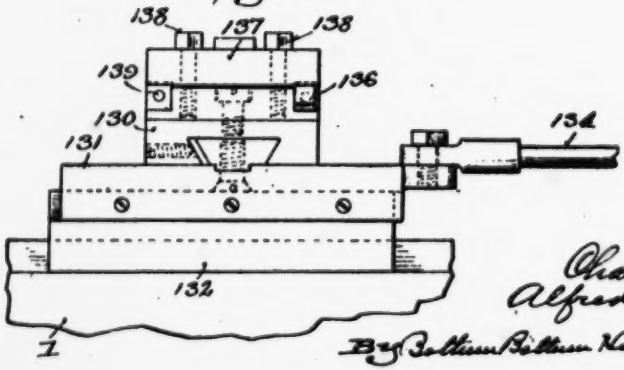

Inventors:
Charles Gordon,
Alfred W. Redlin,
By Bottum Bottum Hendrall & Lake
Attorneys.

Patented June 16, 1925. 1,542,803

UNITED STATES PATENT OFFICE.

CHARLES GORDON, OF MILWAUKEE, WISCONSN, AND ALFRED W. REDLIN, OF SAGINAW, MICHIGAN, ASSIGNORS, BY MESNE ASSIGNMENTS, TO THE GORDON FORM LATHE COMPANY, OF CLEVELAND, OHIO, A CORPORATION OF OHIO.

LATHE.

Application filed July 19, 1920. Serial No. 397,239.

To all whom it may concern:

Be it known that we, CHARLES GORDON and ALFRED W. REDLIN, citizens of the United States, residing at Milwaukee, in the county of Milwaukee and State of Wisconsin, and at Saginaw, in the county of Saginaw and State of Michigan, respectively, have invented certain new and useful Improvements in Lathes, of which the following is a specification, reference being had to the accompanying drawing, forming a part thereof.

This invention relates more particularly to lathes for turning irregular or non-circular bodies such as cams, cheek pieces of cranks, etc.

Its main objects are to expedite and facilitate turning or shaping such bodies with accuracy; to maintain the cutting tool at the proper cutting and clearance angles to the work by varying the angle of the tool relative to its support and the work while the cutting is being done; and generally to adapt the construction and operation of a lathe to successfully perform this kind of work.

It consists in the construction, arrangement and combination of parts as hereinafter particularly described and pointed out in the claims.

In the accompanying drawing like characters designate the same parts in the several figures.

Figure 1 is a front elevation of a lathe embodying the invention and specially designed for rough-turning cams on the cam shafts of internal combustion engines; Fig. 2 is a plan view of the machine, parts of which are shown in horizontal section and other parts broken away; Fig. 3 is an enlarged vertical cross section on the line 3—3, Fig. 2, illustrating the operation of tool shifting and controlling cams and a cutting tool with relation to a cam shaft constituting the work; Fig. 4 is a similar section on the line 4—4, Fig. 2, showing a cutting tool in a different relation to the work and tool shifting and controlling cams in corresponding positions; Fig. 5 is an enlarged front elevation and section on the line 5—5, Fig. 14, of a tool holder and a cutting tool; Figs. [illegible] are enlarged vertical cross sections 2, showing a cutting tool in different relations to the work and shifting and controlling cams in corresponding positions; Fig. 8 is an enlarged end elevation of the machine as viewed from the left relative to Figs. 1 and 2, showing the transmission gearing, the gear case cover being removed; Fig. 9 is an enlarged longitudinal section of the carriage head stock, rotary work holder, spindle and driving connection; Figs. 10 and 11 are detail views in the planes indicated by dotted lines 10—10 and 11—11 respectively, Fig. 9, of the separable parts of the rotary work holder and floating coupling for connecting it with the spindle; Fig. 12 is an enlarged sectional detail view on the line 12—12, Fig. 2, of an attachment for rough-turning eccentrics on engine cam shafts; Fig. 13 is a rear elevation of the attachment; and Fig. 14 is a side elevation and partial section on the line 14—14, Fig. 5 of a tool holder and tool.

The machine comprises a work supporting carriage 1, guided horizontally and movable longitudinally in suitable ways at the ends of a frame 2.

On the carriage 1, are mounted and adjustable lengthwise thereof, a head stock 4 and a tail stock 5, which are fastened in place thereon by bolts 6, engaging a longitudinal T-groove or undercut slot 7 in the carriage, as shown in Figs. 6 and 7.

A spindle 9, journaled as shown in Fig. 9, in the head stock 4 is provided at one end with a splined extension 10, which forms an axially sliding rotating connection with a driving member of transmission gearing as hereinafter explained. At the other end the spindle 9 is provided with a cone pointed center 11, and with a work holder having a floating or self-centering connection with the spindle. As shown in Figs. 9, 10 and 11, the work holder and floating coupling for connecting it with the spindle consists of two separable members 13 and 14, which are connected with each other and with the end of the spindle by radial tongues and grooves like or similar to those of an Oldham coupling. The member 14 is loosely fastened to the spindle by screws 15 threaded in the spindle and passing through enlarged countersunk holes in said member,

OVERSIZE PAGE – SEE NEXT FRAME

Patented June 16, 1925. 1,542,803

UNITED STATES PATENT OFFICE.

CHARLES GORDON, OF MILWAUKEE, WISCONSN, AND ALFRED W. REDLIN, OF SAGINAW, MICHIGAN, ASSIGNORS, BY MESNE ASSIGNMENTS, TO THE GORDON FORM LATHE COMPANY, OF CLEVELAND, OHIO, A CORPORATION OF OHIO.

LATHE.

Application filed July 19, 1920. Serial No. 397,339.

To all whom it may concern:

Be it known that we, CHARLES GORDON and ALFRED W. REDLIN, citizens of the United States, residing at Milwaukee, in the county of Milwaukee and State of Wisconsin, and at Saginaw, in the county of Saginaw and State of Michigan, respectively, have invented certain new and useful Improvements in Lathes, of which the following is a specification, reference being had to the accompanying drawing, forming a part thereof.

This invention relates more particularly to lathes for turning irregular or non-circular bodies such as cams, cheek pieces of cranks, etc.

Its main objects are to expedite and facilitate turning or shaping such bodies with accuracy; to maintain the cutting tool at the proper cutting and clearance angles to the work by varying the angle of the tool relative to its support and the work while the cutting is being done; and generally to adapt the construction and operation of a lathe to successfully perform this kind of work.

It consists in the construction, arrangement and combination of parts as hereinafter particularly described and pointed out in the claims.

In the accompanying drawing like characters designate the same parts in the several figures.

Figure 1 is a front elevation of a lathe embodying the invention and specially designed for rough-turning cams on the cam shafts of internal combustion engines; Fig. 2 is a plan view of the machine, parts of which are shown in horizontal section and other parts broken away; Fig. 3 is an enlarged vertical cross section on the line 3—3, Fig. 2, illustrating the operation of tool shifting and controlling cams and a cutting tool with relation to a cam shaft constituting the work; Fig. 4 is a similar section on the line 4—4, Fig. 2, showing a cutting tool in a different relation to the work and tool shifting and controlling cams in corresponding positions; Fig. 5 is an enlarged front elevation and section on the line 5—5, Fig. 14, of a tool holder and a cutting tool; Figs. 6 and 7 are enlarged vertical cross sections on the lines 6—6 and 7—7 respectively, Fig. 2, showing a cutting tool in different relations to the work and shifting and controlling cams in corresponding positions; Fig. 8 is an enlarged end elevation of the machine as viewed from the left relative to Figs. 1 and 2, showing the transmission gearing, the gear case cover being removed; Fig. 9 is an enlarged longitudinal section of the carriage head stock, rotary work holder, spindle and driving connection; Figs. 10 and 11 are detail views in the planes indicated by dotted lines 10—10 and 11—11 respectively, Fig. 9, of the separable parts of the rotary work holder and floating coupling for connecting it with the spindle; Fig. 12 is an enlarged sectional detail view on the line 12—12, Fig. 2, of an attachment for rough-turning eccentrics on engine cam shafts; Fig. 13 is a rear elevation of the attachment; and Fig. 14 is a side elevation and partial section on the line 14—14, Fig. 5 of a tool holder and tool.

The machine comprises a work supporting carriage 1, guided horizontally and movable longitudinally in suitable ways at the ends of a frame 2.

On the carriage 1, are mounted and adjustable lengthwise thereof, a head stock 4 and a tail stock 5, which are fastened in place thereon by bolts 6, engaging a longitudinal T-groove or undercut slot 7 in the carriage, as shown in Figs. 6 and 7.

A spindle 9, journaled as shown in Fig. 9, in the head stock 4 is provided at one end with a splined extension 10, which forms an axially sliding rotating connection with a driving member of transmission gearing as hereinafter explained. At the other end the spindle 9 is provided with a cone pointed center 11, and with a work holder having a floating or self-centering connection with the spindle. As shown in Figs. 9, 10 and 11, the work holder and floating coupling for connecting it with the spindle consists of two separable members 13 and 14, which are connected with each other and with the end of the spindle by radial tongues and grooves like or similar to those of an Oldham coupling. The member 14 is loosely fastened to the spindle by screws 15 threaded in the spindle and passing through enlarged countersunk holes in said member, as shown in Fig. 11. The member 13 is

formed with a split collar 16, provided with a clamping bolt 17 for fastening it on and in driving relation to the end of a cam shaft 18. The radial tongues and grooves on opposite sides of the center of the adjoining faces of the members 13 and 14 are made of different widths, as shown in Fig. 11, so that they can only be assembled in driving engagement in a certain angular relation to each other.

The tail stock 5 is provided in axial alignment with the spindle 9 and its center 11, with a cone pointed center 20, axially adjustable in the usual manner, by means of a screw and a hand wheel or crank 21 for shifting it into and out of engagement with a cam shaft, the opposite end of which is held on the head center 11.

The adjustment of the tail stock 5 provides for cam shafts of different lengths, while the adjustment of the head stock provides for turning cams which are at different distances from the ends of their shafts which are clamped in the work holder next to the spindle 9, and cams which are so closely spaced that they can not all be turned at one setting on account of the wider spacing of the cutting tools, with the closest practicable adjustment of which they are capable, but require two settings, alternate cams being turned with each setting.

Rocker arms or tool carriers or supporting members 23 are pivotally suspended or mounted on a cylindrical bar 24, carried above and parallel with the axis of the spindle 9 by standards 25 on the ends of the frame 2. The rocker arms are separately adjustable lengthwise on the bar 24 and are held thereon in the proper spaced relation to one another by guide blocks 26, fitted in slots in the hubs of the arms and adjustably fastened to the bar by bolts 27 engaging a longitudinal T-groove or undercut slot 28 in the bar, as shown in Figs. 1, 6 and 7. At their lower ends the rocker arms 23 are forked or grooved transversely to the bar 24, and engage guide blocks 30, which are adjustably fastened by bolts 31 in a T-groove or undercut slot in a guide rail 32, secured on the bed of the frame 2 parallel with the bar 24, as shown in Fig. 1, 6 and 7.

As shown in Figs. 3, 4, 6 and 7, angularly adjustable or oscillatory tool holders 34 are rotatably mounted in recesses formed in the front sides of the arms 23 with their axes opposite and parallel with the extended axis of the spindle 9 and tool holder. These tool holders, which are formed with gear teeth and laterally projecting curved flanges concentric with their axes, are guided and held in place in the recesses in the arms 23 by correspondingly curved and flanged seg-

The tool holders may be provided with cutting tools of any suitable form, having cutting edges disposed radially to and their points at the center of the axis of oscillation.

As shown in Figs. 3, 4, 5, 6, 7 and 14, circular or segmental tools 37, are fitted and adjustably held in corresponding recesses in the sides of the tool holders by bolts 38, passing through the tool holders at a slight inclination to their axes and centrally threaded in the tools. The tools are formed with angular notches or recesses in their peripheries to provide cutting edges which are disposed radially both to the axes of the tools themselves and of the tool holders, with the points at the centers of the tool holders. The tools are formed with peripheral helical teeth engaged by adjusting screws 39, swiveled in holes or sockets formed in the tool holders transversely to their axes. The slight inclination of the axes of the tools to the axes of the tool holders, as shown in Fig. 5, provides for the proper clearance of the tool below its radial cutting edge 40.

A shaft 42, rotatably mounted on the machine frame behind, below and parallel with the axis of the spindle 9 and work holder, is provided with tool operating or shifting cams 43 and tool tilting or adjusting cams 44. The rocker arms 23 are provided with cam rollers 46, adjustable by screws 47 transversely to the cam shaft, for varying the depth of the cut made by the tools. Springs 49, interposed between the guide blocks 30 and adjusting screws 50 in the lower ends of the rocker arms, swing said arms towards the cam shaft and hold the rollers 46 in engagement with the cams 43, as shown in Figs. 6 and 7.

Angular levers 52, pivoted to rearward extensions of the arms 23, are provided at one end with cam rollers 53, arranged to bear against the rear sides of the cams 44, opposite the cam shaft, and are forced or provided at the other ends with segment gears 54, meshing with the teeth of the tool holders 34.

Rods 56, guided in rearwardly projecting lugs 57 on the hubs at the upper ends of the arms 23, are connected at their lower ends by links 58 with the levers 52 between their pivots and the gears 54.

Springs 59 interposed between the lugs 57 and adjusting nuts 60 on the upper ends of the rods 56, tend to turn the gears 54 upwardly and the cutting edges of the tools 37 downwardly, and to hold the cam rollers 53 against the cams 44. The lugs 57 are provided on the under side with rubber cushions 62, and the rods 56 are provided below the cushions with nuts or adjust-

OVERSIZE PAGE – SEE NEXT FRAME
FOR REMAINDER OF PAGE

formed with a split collar 16, provided with a clamping bolt 17 for fastening it on and in driving relation to the end of a cam shaft 18. The radial tongues and grooves on opposite sides of the center of the adjoining faces of the members 13 and 14 are made of different widths, as shown in Fig. 11, so that they can only be assembled in driving engagement in a certain angular relation to each other.

The tail stock 5 is provided in axial alignment with the spindle 9 and its center 11, with a cone pointed center 20, axially adjustable in the usual manner, by means of a screw and a hand wheel or crank 21 for shifting it into and out of engagement with a cam shaft, the opposite end of which is held on the head center 11.

The adjustment of the tail stock 5 provides for cam shafts of different lengths, while the adjustment of the head stock provides for turning cams which are at different distances from the ends of their shafts which are clamped in the work holder next to the spindle 9, and cams which are so closely spaced that they can not all be turned at one setting on account of the wider spacing of the cutting tools, with the closest practicable adjustment of which they are capable, but require two settings, alternate cams being turned with each setting.

Rocker arms or tool carriers or supporting members 23 are pivotally suspended or mounted on a cylindrical bar 24, carried above and parallel with the axis of the spindle 9 by standards 25 on the ends of the frame 2. The rocker arms are separately adjustable lengthwise on the bar 24 and are held thereon in the proper spaced relation to one another by guide blocks 26, fitted in slots in the hubs of the arms and adjustably fastened to the bar by bolts 27 engaging a longitudinal T-groove or undercut slot 28 in the bar, as shown in Figs. 1, 6 and 7. At their lower ends the rocker arms 23 are forked or grooved transversely to the bar 24, and engage guide blocks 30, which are adjustably fastened by bolts 31 in a T-groove or undercut slot in a guide rail 32, secured on the bed of the frame 2 parallel with the bar 24, as shown in Fig. 1, 6 and 7.

As shown in Figs. 3, 4, 6 and 7, angularly adjustable or oscillatory tool holders 34 are rotatably mounted in recesses formed in the front sides of the arms 23 with their axes opposite and parallel with the extended axis of the spindle 9 and tool holder. These tool holders, which are formed with gear teeth and laterally projecting curved flanges concentric with their axes, are guided and held in place in the recesses in the arms 23 by correspondingly curved and flanged segmental cap rings 35, fastened to opposite sides of the arms.

The tool holders may be provided with cutting tools of any suitable form, having cutting edges disposed radially to and their points at the center of the axis of oscillation.

As shown in Figs. 3, 4, 5, 6, 7 and 14, circular or segmental tools 37, are fitted and adjustably held in corresponding recesses in the sides of the tool holders by bolts 38, passing through the tool holders at a slight inclination to their axes and centrally threaded in the tools. The tools are formed with angular notches or recesses in their peripheries to provide cutting edges which are disposed radially both to the axes of the tools themselves and of the tool holders, with the points at the centers of the tool holders. The tools are formed with peripheral helical teeth engaged by adjusting screws 39, swiveled in holes or sockets formed in the tool holders transversely to their axes. The slight inclination of the axes of the tools to the axes of the tool holders, as shown in Fig. 5, provides for the proper clearance of the tool below its radial cutting edge 40.

A shaft 42, rotatably mounted on the machine frame behind, below and parallel with the axis of the spindle 9 and work holder, is provided with tool operating or shifting cams 43 and tool tilting or adjusting cams 44. The rocker arms 23 are provided with cam rollers 46, adjustable by screws 47 transversely to the cam shaft, for varying the depth of the cut made by the tools. Springs 49, interposed between the guide blocks 30 and adjusting screws 50 in the lower ends of the rocker arms, swing said arms towards the cam shaft and hold the rollers 46 in engagement with the cams 43, as shown in Figs. 6 and 7.

Angular levers 52, pivoted to rearward extensions of the arms 23, are provided at one end with cam rollers 53, arranged to bear against the rear sides of the cams 44, opposite the cam shaft, and are forced or provided at the other ends with segment gears 54, meshing with the teeth of the tool holders 34.

Rods 56, guided in rearwardly projecting lugs 57 on the hubs at the upper ends of the arms 23, are connected at their lower ends by links 58 with the levers 52 between their pivots and the gears 54.

Springs 59 interposed between the lugs 57 and adjusting nuts 60 on the upper ends of the rods 56, tend to turn the gears 54 upwardly and the cutting edges of the tools 37 downwardly, and to hold the cam rollers 53 against the cams 44. The lugs 57 are provided on the under side with rubber cushions 62, and the rods 56 are provided below the cushions with nuts or adjustable stops 63, for limiting the movement of the levers 52 without shock or jar to the tool

holders and tools when the rollers 53 pass over the high points of the cams 44.

The spacing of the cams 43 and 44 on the shaft 42 to correspond with the variable spacing of the cams to be turned, may be varied by individual adjustment of the cams on the shaft, or preferably by making the cam shaft 42 readily removable from the machine and permanently adjusting the cams thereon for any given job, so that for turning cams of different forms and spacing, other cam shafts 42, with tool operating or shifting cams 43, and tool tilting or adjusting cams 44 of the required shapes and spacing, may be substituted. For this purpose the cam shaft 42 is made in sections which are connected by flanged or other readily detachable couplings 65, as shown in Fig. 2, so that the section on which the cams are mounted may be easily removed from the machine without disturbing the adjustment of the cams.

The machine is preferably provided as shown in Figs. 1, 2 and 8, with one or more struts or braces 67, which are adjustable lengthwise of the machine and are mounted at their upper ends on the bar 24, and are connected at their lower ends with the bed of the frame 2 by bolts 68, engaging a longitudinal T-groove or undercut slot 69 in the rear side of the bed. These struts or braces are provided with bearings for supporting the cam shaft 42, and when they are used, the bearing for the cam shaft at the end of the frame opposite the driving end of the shaft, the adjacent end section of the shaft, and the coupling 65 therefor, may be dispensed with, so that the shaft or section thereof on which the cams are mounted may be more easily and quickly removed.

The carriage 1, is traversed to carry the work mounted thereon transversely along the points of the tools 37, by a feed screw 71, parallel with the spindle 9, as shown in Figs. 1 and 2.

Referring to Figs. 1, 2 and 8, the spindle 9 and work holder and the cam shaft 42 with the tool shifting and adjusting cams 43 and 44, are rotated synchronously, and the feed screw 71 for traversing the carriage 1 and moving the work past the points of the tools 37, is rotated by transmission gearing housed in a box or case 73, attached to one end of the frame 2.

The transmission gearing comprises a tubular shaft 75, extending through and projecting at its outer end from the gear case 73, parallel with the spindle 9, cam shaft 42 and feed screw 71. On the outer end of the shaft 75 a pulley or main driving member 77 is loosely mounted, and the driving pulley is enclosed in a housing 78, mounted and angularly adjustable on the [illegible] of the gear case 73, so that the belt a motor or countershaft located in different positions relative to the machine, may lead in different directions, according to the location of the motor or countershaft. The pulley 77 is operatively connected with the shaft 75 by a friction clutch 79, covered by a housing 80, which rotates with the pulley.

A gear 82, fixed on the shaft 75, is connected by a train of speed reducing gears 83, 84 and 85, with the spindle 9 and work holder, the hub of the gear 85 having a splined or axially sliding driving connection with the extension 10 of the spindle, as shown in Fig. 9.

The gear 84 is connected by a train of speed reducing gears 87, 88, 89, 90, 91, 92 and 93 with the feed screw 71, the gear 93 being loosely mounted on the feed screw and operatively connected therewith by a clutch 95.

The gears 87 and 88 are fixed on the driving section of the cam shaft 42.

The feed screw 71 is operated manually when the clutch 95 is disengaged to traverse the carriage 1 in either direction, by a hand wheel or crank 97, mounted on the front end of a transverse shaft 98, which is connected by bevel gears 99 with a shaft 100, below and parallel with the screw 71. The shaft 100 is connected by spur gears 101 and 102 in the gear case 73, with the screw 71.

The clutch 79 is shifted to connect and disconnect the spindle 9 and work holder, cam shaft 42 and feed screw 71, with the pulley 77 by means of a lever 104, fixed on the front end of a transverse shaft 105. The shaft 105 is provided at its rear end with an upwardly extending arm 106, which is connected by an adjustable pivot coupling 107 with a rod 108 passing through the tubular shaft 75 and connected at its outer end with a jaw expander 109 of the clutch 79, as shown in Fig. 2. A spring 110 interposed between the pivot coupling 107 and an abutment on the machine frame, as shown in Fig. 2, tends to shift and hold the jaw expander 109 in releasing position.

The lever 104 is provided on the rear side with a segment 112 formed at the ends with stop lugs 113 for limiting the throw of the lever, and next to one of the lugs with a notch 114.

A short rocker shaft 116, is mounted in a bracket 117 on the frame 2 parallel with the feed screw 71 and adjacent the segment 112. At one end the rocker shaft 116 is provided with a forwardly projecting handle 118, and at the other end with a forwardly projecting finger 119, adapted by engagement with the notch 114 in the segment to hold the lever 104 in clutch-engaging position.

OVERSIZE PAGE – SEE NEXT FRAME

holders and tools when the rollers 53 pass over the high points of the cams 44.

The spacing of the cams 43 and 44 on the shaft 42 to correspond with the variable spacing of the cams to be turned, may be varied by individual adjustment of the cams on the shaft, or preferably by making the cam shaft 42 readily removable from the machine and permanently adjusting the cams thereon for any given job, so that for turning cams of different forms and spacing, other cam shafts 42, with tool operating or shifting cams 43, and tool tilting or adjusting cams 44 of the required shapes and spacing, may be substituted. For this purpose the cam shaft 42 is made in sections which are connected by flanged or other readily detachable couplings 65, as shown in Fig. 2, so that the section on which the cams are mounted may be easily removed from the machine without disturbing the adjustment of the cams.

The machine is preferably provided as shown in Figs. 1, 2 and 8, with one or more struts or braces 67, which are adjustable lengthwise of the machine and are mounted at their upper ends on the bar 24, and are connected at their lower ends with the bed of the frame 2 by bolts 68, engaging a longitudinal T-groove or undercut slot 69 in the rear side of the bed. These struts or braces are provided with bearings for supporting the cam shaft 42, and when they are used, the bearing for the cam shaft at the end of the frame opposite the driving end of the shaft, the adjacent end section of the shaft, and the coupling 65 therefor, may be dispensed with, so that the shaft or section thereof on which the cams are mounted may be more easily and quickly removed.

The carriage 1, is traversed to carry the work mounted thereon transversely along the points of the tools 37, by a feed screw 71, parallel with the spindle 9, as shown in Figs. 1 and 2.

Referring to Figs. 1, 2 and 8, the spindle 9 and work holder and the cam shaft 42 with the tool shifting and adjusting cams 43 and 44, are rotated synchronously, and the feed screw 71 for traversing the carriage 1 and moving the work past the points of the tools 37, is rotated by transmission gearing housed in a box or case 73, attached to one end of the frame 2.

The transmission gearing comprises a tubular shaft 75, extending through and projecting at its outer end from the gear case 73, parallel with the spindle 9, cam shaft 42 and feed screw 71. On the outer end of the shaft 75 a pulley or main driving member 77 is loosely mounted, and the driving pulley is enclosed in a housing 78, mounted and angularly adjustable on the cover of the gear case 73, so that the belt (not shown) for driving the pulley from a motor or countershaft located in different positions relative to the machine, may lead in different directions, according to the location of the motor or countershaft. The pulley 77 is operatively connected with the shaft 75 by a friction clutch 79, covered by a housing 80, which rotates with the pulley.

A gear 82, fixed on the shaft 75, is connected by a train of speed reducing gears 83, 84 and 85, with the spindle 9 and work holder, the hub of the gear 85 having a splined or axially sliding driving connection with the extension 10 of the spindle, as shown in Fig. 9.

The gear 84 is connected by a train of speed reducing gears 87, 88, 89, 90, 91, 92 and 93 with the feed screw 71, the gear 93 being loosely mounted on the feed screw and operatively connected therewith by a clutch 95.

The gears 87 and 88 are fixed on the driving section of the cam shaft 42.

The feed screw 71 is operated manually when the clutch 95 is disengaged to traverse the carriage 1 in either direction, by a hand wheel or crank 97, mounted on the front end of a transverse shaft 98, which is connected by bevel gears 99 with a shaft 100, below and parallel with the screw 71. The shaft 100 is connected by spur gears 101 and 102 in the gear case 73, with the screw 71.

The clutch 79 is shifted to connect and disconnect the spindle 9 and work holder, cam shaft 42 and feed screw 71, with the pulley 77 by means of a lever 104, fixed on the front end of a transverse shaft 105. The shaft 105 is provided at its rear end with an upwardly extending arm 106, which is connected by an adjustable pivot coupling 107 with a rod 108 passing through the tubular shaft 75 and connected at its outer end with a jaw expander 109 of the clutch 79, as shown in Fig. 2. A spring 110 interposed between the pivot coupling 107 and an abutment on the machine frame, as shown in Fig. 2, tends to shift and hold the jaw expander 109 in releasing position.

The lever 104 is provided on the rear side with a segment 112 formed at the ends with stop lugs 113 for limiting the throw of the lever, and next to one of the lugs with a notch 114.

A short rocker shaft 116, is mounted in a bracket 117 on the frame 2 parallel with the feed screw 71 and adjacent the segment 112. At one end the rocker shaft 116 is provided with a forwardly projecting handle 118, and at the other end with a forwardly projecting finger 119, adapted by engagement with the notch 114 in the segment to hold the lever 104 in clutch-engaging position.

In a T-groove or undercut slot 121 formed

in the carriage 1 adjacent and parallel with the rocker shaft 116, a trip dog 122 is adjustably bolted and is adapted by engagement with a rearwardly extending arm 123, on the rocker shaft, as shown by dotted lines in Fig. 8, to turn the finger 119 upwardly out of engagement with the notch 114, and thereby release the lever 104 and permit the spring 110 to disengage the clutch 79, when the carriage 1 reaches a certain point in its advance movement, according to the adjustment of the dog.

The clutch 95 is operated by a shifting lever 124 with the outer end of which a rod 125 is pivotally connected, as shown in Fig. 2. The rod 125 passes loosely through a block 126 pivoted on the rear side of the lever 104, and is provided at the end adjacent said lever with a handle 127. The block 126 is adapted by engagement with a spring cushion 128, shown in Figs. 1 and 2 on the rod 125, to disengage the clutch 95 when the lever 104 is released and thrown by the spring 110 into position to disengage the clutch 79.

Referring to Figs. 1, 2, 12 and 13, for turning eccentrics on cam shafts simultaneously with the cams, the machine is provided with a tool supporting slide or holder 130, mounted and movable transversely to the travel of the carriage 1 on a saddle 131, which in turn is slidably mounted and guided lengthwise of the carriage on a base or supporting block 132. The base 132 is guided on and adjustable lengthwise of the carriage 1, to which it is secured in adjusted position by bolts engaging the T-grooves 7 in the carriage. A tie rod 134, arranged parallel with the carriage ways, connects the saddle 131 with the gear case 73 or a fixed part of the machine, and holds the saddle in a stationary position relative to the carriage. For adjusting the position of the eccentric turning attachment on the carriage according to the varying location of eccentrics on cam shafts to be turned, tie rods 134 of different lengths are provided.

The attachment is provided with a cutting tool 136, which is adjustably clamped in the slide or holder 130 by a bar 137 and bolts 138, and is adjusted lengthwise therein transversely to the travel of the carriage by a screw 139. The tool holder as shown, is designed for clamping a tool in either end thereof, and is provided with two adjusting screws 139.

The tool slide or holder with the tool, is moved transversely to the work or travel of the carriage by an actuating eccentric 141, loosely splined on a shaft 142, parallel with the axis of the spindle 9 and work holder, and confined with a compensating the tool holder and causes the tool 136 to turn an eccentric on a cam shaft 18 corresponding exactly with the eccentric 141.

The shaft 142 is connected as shown in Fig. 2, by an angularly adjustable coupling 147, with a driving gear 148, in the gear case 73, for varying the angular adjustment of the actuating eccentric 141 relative to the spindle 9 and work holder and the cam shaft 42.

As shown in Figs. 2 and 8, the gear 148 is connected by an idle gear 149, with a gear 150, fixed to the hub of the spindle driving gear 85, so as to rotate the shaft 142 with the eccentric 141 synchronously with the spindle 9 and work holder and the cam shaft 42.

As shown in Figs. 1, 2 and 8, the machine is provided on the rear side with a pump 152 for supplying oil or cutter liquid to the cam and eccentric turning tools through a perforated pipe 153, arranged lengthwise of the machine above the tools and provided with a controlling and regulating valve 154.

The frame 2 is formed or provided below the carriage and cutting tools with a trough or receptacle 156 for catching and holding the oil or cutter fluid supplied to the tools. The oil or cutter fluid is drawn from this trough or receptacle by the pump through a pipe 158.

The pump is driven from an extension of the shaft of the gears 83 and 84 by gears 160 and 161 indicated by dotted lines in Figs. 2 and 8, and by a pulley 162 on the shaft of the gear 161 belted to a pulley 163 on the pump shaft.

The operation of the eccentric shaft 134 and of the pump are manually and automatically controlled, like the operation of the spindle 9 and cam shaft 42, by the lever 104 and trip dog 122.

For turning cam shafts having center bearings, the machine is provided with a steady rest 165, adjustably mounted on and movable with the carriage 1, as shown in Figs. 1 and 2. This rest comprises two jaws or members, which are hinged together so that the upper jaw or member can be turned up and back out of the way, for placing the work on the carriage and removing it therefrom. The upper movable member is locked and held in operative position on the work by a dog 166, pivotally mounted in the lower member and operated by a handle 167 for engaging and disengaging it with a cross pin in the upper member. The eccentric shaft 142 passes through and is guided in a tubular bolt or pin which pivotally connects the members of the rest.

In the operation of the machine f

OVERSIZE PAGE – SEE NEXT FRAME

in the carriage 1 adjacent and parallel with the rocker shaft 116, a trip dog 122 is adjustably bolted and is adapted by engagement with a rearwardly extending arm 123, on the rocker shaft, as shown by dotted lines in Fig. 8, to turn the finger 119 upwardly out of engagement with the notch 114, and thereby release the lever 104 and permit the spring 110 to disengage the clutch 79, when the carriage 1 reaches a certain point in its advance movement, according to the adjustment of the dog.

The clutch 95 is operated by a shifting lever 124 with the outer end of which a rod 125 is pivotally connected, as shown in Fig. 2. The rod 125 passes loosely through a block 126 pivoted on the rear side of the lever 104, and is provided at the end adjacent said lever with a handle 127. The block 126 is adapted by engagement with a spring cushion 128, shown in Figs. 1 and 2 on the rod 125, to disengage the clutch 95 when the lever 104 is released and thrown by the spring 110 into position to disengage the clutch 79.

Referring to Figs. 1, 2, 12 and 13, for turning eccentrics on cam shafts simultaneously with the cams, the machine is provided with a tool supporting slide or holder 130, mounted and movable transversely to the travel of the carriage 1 on a saddle 131, which in turn is slidably mounted and guided lengthwise of the carriage on a base or supporting block 132. The base 132 is guided on and adjustable lengthwise of the carriage 1, to which it is secured in adjusted position by bolts engaging the T-grooves 7 in the carriage. A tie rod 134, arranged parallel with the carriage ways, connects the saddle 131 with the gear case 73 or a fixed part of the machine, and holds the saddle in a stationary position relative to the carriage. For adjusting the position of the eccentric turning attachment on the carriage according to the varying location of eccentrics on cam shafts to be turned, tie rods 134 of different lengths are provided.

The attachment is provided with a cutting tool 136, which is adjustably clamped in the slide or holder 130 by a bar 137 and bolts 138, and is adjusted lengthwise therein transversely to the travel of the carriage by a screw 139. The tool holder as shown, is designed for clamping a tool in either end thereof, and is provided with two adjusting screws 139.

The tool slide or holder with the tool, is moved transversely to the work or travel of the carriage by an actuating eccentric 141, loosely splined on a shaft 142, parallel with the axis of the spindle 9 and work holder, and confined with a compensating eccentric 144 between cheek pieces 143 on the saddle. The eccentric 144 mounted on the eccentric 141, works in a strap 145 on the tool holder and causes the tool 136 to turn an eccentric on a cam shaft 18 corresponding exactly with the eccentric 141.

The shaft 142 is connected as shown in Fig. 2, by an angularly adjustable coupling 147, with a driving gear 148, in the gear case 73, for varying the angular adjustment of the actuating eccentric 141 relative to the spindle 9 and work holder and the cam shaft 42.

As shown in Figs. 2 and 8, the gear 148 is connected by an idle gear 149, with a gear 150, fixed to the hub of the spindle driving gear 85, so as to rotate the shaft 142 with the eccentric 141 synchronously with the spindle 9 and work holder and the cam shaft 42.

As shown in Figs. 1, 2 and 8, the machine is provided on the rear side with a pump 152 for supplying oil or cutter liquid to the cam and eccentric turning tools through a perforated pipe 153, arranged lengthwise of the machine above the tools and provided with a controlling and regulating valve 154.

The frame 2 is formed or provided below the carriage and cutting tools with a trough or receptacle 156 for catching and holding the oil or cutter fluid supplied to the tools. The oil or cutter fluid is drawn from this trough or receptacle by the pump through a pipe 158.

The pump is driven from an extension of the shaft of the gears 83 and 84 by gears 160 and 161 indicated by dotted lines in Figs. 2 and 8, and by a pulley 162 on the shaft of the gear 161 belted to a pulley 163 on the pump shaft.

The operation of the eccentric shaft 134 and of the pump are manually and automatically controlled, like the operation of the spindle 9 and cam shaft 42, by the lever 104 and trip dog 122.

For turning cam shafts having center bearings, the machine is provided with a steady rest 165, adjustably mounted on and movable with the carriage 1, as shown in Figs. 1 and 2. This rest comprises two jaws or members, which are hinged together so that the upper jaw or member can be turned up and back out of the way, for placing the work on the carriage and removing it therefrom. The upper movable member is locked and held in operative position on the work by a dog 166, pivotally mounted in the lower member and operated by a handle 167 for engaging and disengaging it with a cross pin in the upper member. The eccentric shaft 142 passes through and is guided in a tubular bolt or pin which pivotally connects the members of the rest.

In the operation of the machine for rough turning cam shafts having pump eccentrics, the rocker arms 23 having been adjusted on the bar 24 and the guide blocks

on the rail 32 to correspond with the spacing of the cams on the shafts to be turned, and tool shifting and adjusting cams 43 and 44 of the required shapes having been properly adjusted on the cam shaft 42, or a shaft on which such cams have been previously assembled as required for the work to be done, having been placed in the machine and connected with the transmission gearing in proper angular relation thereto, the collar 16 of the work holder is clamped on one of the end journals or bearings of a cam shaft to be turned, and the cam shaft is then placed in the machine on the centers 11 and 20, for which center seats have been accurately formed in the ends of the cam shaft.

The eccentric turning attachment being adjusted in proper position with relation to the work on the carriage 1, and connected by a tie rod 134 of the reqired length with the gear case 73, and the coupling 147 being adjusted to turn the pump eccentric in the proper angular relation to the cams to be simultaneously turned on the same shaft, the operator throws the lever 104 to the right, as shown in Figs. 1 and 2, thereby engaging the clutch 79, and operatively connecting the spindle 9 and the tool controlling cam shaft 42 with the driving pulley 77. The finger 119 dropping into the notch 114 of the segment 112, locks and holds the clutch 79 in engagement against the tension of the spring 110.

The trip dog 122 having been adjusted in the groove 121 to stop the machine when the cutting tools have all cleared the cams and eccentric on the work shaft mounted on the carriage 1, and the carriage having been run back to its starting position at the left by the hand wheel or crank 97, the handle 127 is shifted to the right by the operator, thereby engaging the clutch 95 and operatively connecting the feed screw 71 with the gear 93.

As the work is fed with the carriage past the points of the cutting tools 37 and 136 and is rotated with the spindle 9 and work holder, the cams and eccentric on the work shaft are simultaneously turned to the required shapes and in the proper angular relation to one another, determined by the shapes and adjustment of the tool shifting cams 43, and the adjustment of the eccentric turning tool 136 and its actuating eccentric 141.

The cam turning tools 37 are automatically tilted or angularly adjusted and maintained at the proper cutting and clearance angles to the several parts of the work, as illustrated in Figs. 3, 4, 6 and 7, by the cams 44.

When the several parts of the work have been turned, the tools which have operated with the arm 123, lifts the finger 119 out of the notch 114 in the segment 112, thereby releasing the lever 104, which is then thrown by the spring 110 to the left, the clutch 79 being simultaneously disengaged and the pulley 77 or main driving member of the machine being disconnected from the transmission gearing through which the several operative parts of the machine are actuated.

When the lever 104 is thus thrown to the left by the spring 110, the block 126 by engagement with the cushion 128 shifts the lever 124 and disengages the clutch 95, thereby disconnecting the feed screw 71 from the transmission gear 93, so that the table 1 can be manually returned to its starting position by the hand wheel or crank 97.

Any eccentricity or inaccuracy in the journal or bearing of the cam shaft 18 which is clamped in the work holder 13, is compensated for by the floating connection of the work holder with the spindle 9, the true position of the work in the machine being determined by the head and tail centers 11 and 20.

When the cams or parts of the work are so closely spaced that they cannot all be turned at once on account of the limit to the close spacing of the rocker arms 23 and the tool operating and controlling cams 43 and 44, due to structural considerations, the rocker arms are adjusted on the bar 24 and the cams on the shaft 42, to turn alternate cams or parts of the work, which then requires two settings or adjustments of the head and tail stocks 4 and 5 and of the trip dog 122.

One or more of the rocker arms and corresponding tool operating and controlling cams may be used, according to the work to be performed.

For turning single non-circular or irregular pieces such as the cheek pieces of crank shafts, the spindle 9 is to be provided with a work holder and driving connection of the proper construction, according to the shape of the work, and the tail stock 5, eccentric turning attachment, with its base block 132, steady rest 165, and more or less of the rocker arms 23 may be removed from the machine or left thereon, if they are not in the way.

Various changes in the construction and arrangement of parts of the machine to adapt it for turning work of different kinds having more or less parts of various shapes and arrangements, may be made without departure from the principle and scope of the invention, as defined in the following claims.

We claim:

1. In a lathe the combination of a work holder, a tool carrier movable transversely to the axial line of the work holder, a tool

OVERSIZE PAGE – SEE NEXT FRAME
FOR REMAINDER OF PAGE

on the rail 32 to correspond with the spacing of the cams on the shafts to be turned, and tool shifting and adjusting cams 43 and 44 of the required shapes having been properly adjusted on the cam shaft 42, or a shaft on which such cams have been previously assembled as required for the work to be done, having been placed in the machine and connected with the transmission gearing in proper angular relation thereto, the collar 16 of the work holder is clamped on one of the end journals or bearings of a cam shaft to be turned, and the cam shaft is then placed in the machine on the centers 11 and 20, for which center seats have been accurately formed in the ends of the cam shaft.

The eccentric turning attachment being adjusted in proper position with relation to the work on the carriage 1, and connected by a tie rod 134 of the reqired length with the gear case 73, and the coupling 147 being adjusted to turn the pump eccentric in the proper angular relation to the cams to be simultaneously turned on the same shaft, the operator throws the lever 104 to the right, as shown in Figs. 1 and 2, thereby engaging the clutch 79, and operatively connecting the spindle 9 and the tool controlling cam shaft 42 with the driving pulley 77. The finger 119 dropping into the notch 114 of the segment 112, locks and holds the clutch 79 in engagement against the tension of the spring 110.

The trip dog 122 having been adjusted in the groove 121 to stop the machine when the cutting tools have all cleared the cams and eccentric on the work shaft mounted on the carriage 1, and the carriage having been run back to its starting position at the left by the hand wheel or crank 97, the handle 127 is shifted to the right by the operator, thereby engaging the clutch 95 and operatively connecting the feed screw 71 with the gear 93.

As the work is fed with the carriage past the points of the cutting tools 37 and 136 and is rotated with the spindle 9 and work holder, the cams and eccentric on the work shaft are simultaneously turned to the required shapes and in the proper angular relation to one another, determined by the shapes and adjustment of the tool shifting cams 43, and the adjustment of the eccentric turning tool 136 and its actuating eccentric 141.

The cam turning tools 37 are automatically tilted or angularly adjusted and maintained at the proper cutting and clearance angles to the several parts of the work, as illustrated in Figs. 3, 4, 6 and 7, by the cams 44.

When the several parts of the work have all cleared the tools which have operated thereon, the trip dog 122 by engagement with the arm 123, lifts the finger 119 out of the notch 114 in the segment 112, thereby releasing the lever 104, which is then thrown by the spring 110 to the left, the clutch 79 being simultaneously disengaged and the the pulley 77 or main driving member of the machine being disconnected from the transmission gearing through which the several operative parts of the machine are actuated.

When the lever 104 is thus thrown to the left by the spring 110, the block 126 by engagement with the cushion 128 shifts the lever 124 and disengages the clutch 95, thereby disconnecting the feed screw 71 from the transmission gear 93, so that the table 1 can be manually returned to its starting position by the hand wheel or crank 97.

Any eccentricity or inaccuracy in the journal or bearing of the cam shaft 18 which is clamped in the work holder 13, is compensated for by the floating connection of the work holder with the spindle 9, the true position of the work in the machine being determined by the head and tail centers 11 and 20.

When the cams or parts of the work are so closely spaced that they cannot all be turned at once on account of the limit to the close spacing of the rocker arms 23 and the tool operating and controlling cams 43 and 44, due to structural considerations, the rocker arms are adjusted on the bar 24 and the cams on the shaft 42, to turn alternate cams or parts of the work, which then requires two settings or adjustments of the head and tail stocks 4 and 5 and of the trip dog 122.

One or more of the rocker arms and corresponding tool operating and controlling cams may be used, according to the work to be performed.

For turning single non-circular or irregular pieces such as the cheek pieces of crank shafts, the spindle 9 is to be provided with a work holder and driving connection of the proper construction, according to the shape of the work, and the tail stock 5, eccentric turning attachment, with its base block 132, steady rest 165, and more or less of the rocker arms 23 may be removed from the machine or left thereon, if they are not in the way.

Various changes in the construction and arrangement of parts of the machine to adapt it for turning work of different kinds having more or less parts of various shapes and arrangements, may be made without departure from the principle and scope of the invention, as defined in the following claims.

We claim:

1. In a lathe the combination of a work holder, a tool carrier movable transversely to the axial line of the work holder, a tool mounted and angularly movable on the car-

rier, automatic means for moving the carrier towards and from the work, and means for varying the angular relation of the tool to the carrier and work to maintain proper cutting and clearance angles of the tool to work of non-circular contour synchronously with the rotation of the work.

2. In a lathe the combination of a rotary work holder, a tool holder provided with a cutting tool, movable towards and from the axial line of the work holder and angularly adjustable in a plane transverse to the axis of the work holder, cams adapted to vary the distance between the point of the tool and the axial line of the work holder and to vary the adjustment of the tool for maintaining proper cutting and clearance angles of the tool to work of non-circular contour, means for synchronously rotating the work holder and cams, and means for simultaneously causing relative movement between the work holder and tool holder axially with relation to the work holder.

3. In a lathe the combination of a rotary tool holder, means for rotating the same, an angularly adjustable tool holder movable transversely to the axis of the work holder, a tool carried by the tool holder with its cutting edge radial to and its point at the center of its angular adjusting movement, and cams rotated synchronously with the work holder, one adapted to shift the tool holder and tool transversely to the axis of the work holder and the other to vary the angular adjustment of the tool holder and tool relative to the work.

4. In a lathe the combination of a rotary work holder, means for rotating said holder, a tool supporting member movable transversely to the axis of the work holder, a tool holder carried by said supporting member opposite the axis of the work holder and oscillatory about an axis parallel with the axis of the work holder, a tool mounted in the tool holder with its point at the center of oscillation of the tool holder, and tool shifting and adjusting cams rotated synchronously with the work holder, one adapted to shift the tool supporting member transversely to the axis of the work holder and the other to oscillate the tool holder with the tool while the tool is working.

5. In a lathe the combination of a rotary work holder, means for rotating said holder, a tool supporting member movable transversely to the axis of the work holder, a segmental, toothed tool holder carried by said supporting member opposite the axis of the work holder and oscillatory about an axis parallel with the axis of the work with the tool holder, and tool shifting and adjusting cams rotated synchronously with the work holder, one adapted to shift said supporting member with the tool holder and tool transversely to the axis of the work holder and the other to oscillate the toothed arm and tool holder with the tool relative to the supporting member.

6. In a lathe the combination of a rotary work holder, means for rotating said holder, a rocker arm mounted to swing transversely to the axis of the work holder on an axis parallel therewith, a tool holder carried by said rocker arm and oscillatory on an axis opposite and parallel with the axis of the work holder, a tool mounted in the tool holder with its point at the center of oscillation, a tool shifting cam adapted to swing said rocker arm with the tool holder and tool transversely to the axis of the work holder, a tool adjusting cam adapted to oscillate the tool holder and tool relative to the rocker arm, and means for rotating the cams synchronously with the work holder.

7. In a lathe the combination of a rotary work holder, means for rotating said holder, a tool supporting member movable transversely to the axis of the work holder, a tool holder carried by said supporting member and oscillatory about an axis opposite and parallel with the axis of the work holder, a tool mounted in the tool holder with its point at the center of oscillation, a cam adapted to shift the tool supporting member towards the work holder, means for adjusting the movement of said supporting member by the cam to vary the depth of cut by the tool, a cam adapted to oscillate the tool holder and tool to maintain the proper angle of the tool relative to the work, and means for rotating the cams synchronously with the work holder.

8. In a lathe the combination of a rotary work holder, a rocker arm pivotally mounted on an axis parallel with the axis of the work holder and provided with an adjustable cam roller, a segmental toothed tool holder carried by the rocker arm and oscillatory on an axis parallel with and opposite the axis of the work holder, a tool carried by the tool holder with its point at the center of oscillation, a tool tilting lever pivoted on the rocker arm and provided with a cam roller and with a toothed segment meshing with the tool holder, a shaft parallel with the axis of the work holder and provided with cams engaging the cam rollers, springs acting on the rocker arm and tool tilting lever and holding the cam rollers in engagement with the cams, and means for rotating the work holder

rier, automatic means for moving the carrier towards and from the work, and means for varying the angular relation of the tool to the carrier and work to maintain proper cutting and clearance angles of the tool to work of non-circular contour synchronously with the rotation of the work.

2. In a lathe the combination of a rotary work holder, a tool holder provided with a cutting tool, movable towards and from the axial line of the work holder and angularly adjustable in a plane transverse to the axis of the work holder, cams adapted to vary the distance between the point of the tool and the axial line of the work holder and to vary the adjustment of the tool for maintaining proper cutting and clearance angles of the tool to work of non-circular contour, means for synchronously rotating the work holder and cams, and means for simultaneously causing relative movement between the work holder and tool holder axially with relation to the work holder.

3. In a lathe the combination of a rotary tool holder, means for rotating the same, an angularly adjustable tool holder movable transversely to the axis of the work holder, a tool carried by the tool holder with its cutting edge radial to and its point at the center of its angular adjusting movement, and cams rotated synchronously with the work holder, one adapted to shift the tool holder and tool transversely to the axis of the work holder and the other to vary the angular adjustment of the tool holder and tool relative to the work.

4. In a lathe the combination of a rotary work holder, means for rotating said holder, a tool supporting member movable transversely to the axis of the work holder, a tool holder carried by said supporting member opposite the axis of the work holder and oscillatory about an axis parallel with the axis of the work holder, a tool mounted in the tool holder with its point at the center of oscillation of the tool holder, and tool shifting and adjusting cams rotated synchronously with the work holder, one adapted to shift the tool supporting member transversely to the axis of the work holder and the other to oscillate the tool holder with the tool while the tool is working.

5. In a lathe the combination of a rotary work holder, means for rotating said holder, a tool supporting member movable transversely to the axis of the work holder, a segmental, toothed tool holder carried by said supporting member opposite the axis of the work holder and oscillatory about an axis parallel with the axis of the work holder, a tool mounted in the tool holder with its point at the center of oscillation, a segmentally toothed arm pivotally mounted on the tool supporting member in mesh with the tool holder, and tool shifting and adjusting cams rotated synchronously with the work holder, one adapted to shift said supporting member with the tool holder and tool transversely to the axis of the work holder and the other to oscillate the toothed arm and tool holder with the tool relative to the supporting member.

6. In a lathe the combination of a rotary work holder, means for rotating said holder, a rocker arm mounted to swing transversely to the axis of the work holder on an axis parallel therewith, a tool holder carried by said rocker arm and oscillatory on an axis opposite and parallel with the axis of the work holder, a tool mounted in the tool holder with its point at the center of oscillation, a tool shifting cam adapted to swing said rocker arm with the tool holder and tool transversely to the axis of the work holder, a tool adjusting cam adapted to oscillate the tool holder and tool relative to the rocker arm, and means for rotating the cams synchronously with the work holder.

7. In a lathe the combination of a rotary work holder, means for rotating said holder, a tool supporting member movable transversely to the axis of the work holder, a tool holder carried by said supporting member and oscillatory about an axis opposite and parallel with the axis of the work holder, a tool mounted in the tool holder with its point at the center of oscillation, a cam adapted to shift the tool supporting member towards the work holder, means for adjusting the movement of said supporting member by the cam to vary the depth of cut by the tool, a cam adapted to oscillate the tool holder and tool to maintain the proper angle of the tool relative to the work, and means for rotating the cams synchronously with the work holder.

8. In a lathe the combination of a rotary work holder, a rocker arm pivotally mounted on an axis parallel with the axis of the work holder and provided with an adjustable cam roller, a segmental toothed tool holder carried by the rocker arm and oscillatory on an axis parallel with and opposite the axis of the work holder, a tool carried by the tool holder with its point at the center of oscillation, a tool tilting lever pivoted on the rocker arm and provided with a cam roller and with a toothed segment meshing with the tool holder, a shaft parallel with the axis of the work holder and provided with cams engaging the cam rollers, springs acting on the rocker arm and tool tilting lever and holding the cam rollers in engagement with the cams, and means for rotating the work holder and cams synchronously.

9. In a lathe the combination of a rotary work holder, a rocker arm mounted at one end on a fixed axis parallel with the axis

of the work holder, a stationary guide engaging said arm at its other end, an oscillatory tool holder mounted on the rocker arm with its axis opposite and parallel with the axis of the work holder and provided with a cutting tool having its point at the center of oscillation, a cam adapted to move the rocker arm transversely to the work, a cam adapted to oscillate the tool holder and maintain the tool at the proper angle to the work, and means for rotating the work holder and cams synchronously.

10. In a lathe the combination of an oscillatory tool holder, an angularly adjustable segmental toothed cutting tool pivotally mounted in the tool holder with its periphery intersecting the axis of oscillation of the tool holder, and an adjusting screw swiveled in the tool holder transversely to the tool pivot and engaging the teeth of the tool.

11. In a lathe the combination of an oscillatory tool holder, and a segmental tool angularly adjustable in said holder on an axis inclined to the axis of the holder, and having a radial cutting edge terminating with its periphery at the center of oscillation of the holder.

12. In a lathe the combination of a frame, a work carriage guided thereon, means for feeding the carriage, a head stock mounted on the carriage, a rotary spindle journaled in the head stock and provided at one end with a centering work holder and at the other with a driving connection, a tail stock adjustable on the carriage towards and from the head stock and provided with an axially adjustable center in axial alignment with the spindle, tool supporting members movable transversely to the carriage, oscillatory tool holders mounted on said supporting members and provided with cutting tools, work shaping and tool adjusting cams, and means for rotating the work holder and cams synchronously.

13. In a lathe the combination of a frame, a carriage mounted thereon and provided with a rotary work holder, means for feeding the carriage, a bar mounted on the frame, rocker arms pivotally mounted on said bar, cutting tools carried by said arms and movable therewith transversely to the path of the carriage, cams adapted to shift the arms with the tools relative to the work for producing the desired shapes of parts on which the tools operate, and means for rotating the work holder and cams synchronously.

14. In a lathe the combination of a frame, a carriage mounted thereon and provided with a rotary work holder, means for feeding the carriage, a stationary bar mounted

ried by said arms and provided with cutting tools having their points at the center of oscillation of the tool holders, levers pivoted on the rocker arms and geared with the tool holders, a shaft provided with tool shifting and tilting cams adapted to actuate said rocker arms and levers, and means for rotating the work holder and cam shaft synchronously.

15. In a lathe the combination of a frame, a carriage guided thereon and provided with a rotary work holder, means for feeding the carriage, rocker arms pivotally mounted on an axis parallel with the carriage travel and separately adjustable lengthwise of said axis, angularly adjustable cutting tools carried by the rocker arms, a shaft parallel with the pivot axis of the rocker arms and provided with tool shifting and tilting cams adjustable lengthwise thereof, and means for rotating the tool holder and cam shaft synchronously.

16. In a lathe the combination of a frame, a carriage guided thereon and provided with a rotary work holder, means for feeding the carriage, rocker arms pivotally mounted on the frame and provided with cutting tools movable therewith transversely to the travel of the carriage, cams for swinging the rocker arms, a shaft on which the cams are assembled removably mounted on the frame, and transmission gearing adapted to rotate the work holder and cam shaft synchronously and having a driving member with which the cam shaft is coaxially and detachably connected.

17. In a lathe the combination of a frame, a carriage guided on the frame and provided with a rotary work holder, means for feeding the carriage, tool supports movable transversely to the carriage travel, angularly movable tools carried by said supports, cams for shifting said supports with the tools relative to the work, cams for varying the angular relation of the tools to said supports, a saddle slidably mounted and guided on the carriage lengthwise thereof, a tool holder guided and movable on the saddle transversely to the carriage travel, an eccentric mounted on said saddle and connected with the tool holder, means for holding said saddle in a fixed position relative to the carriage, and transmission gearing adapted to rotate the work holder, cams and eccentric synchronously.

18. In a lathe the combination of a frame, a carriage guided on the frame and provided with a rotary work holder, means for feeding the carriage, a cylindrical bar mounted on the frame parallel with the carriage travel and formed with an undercut longitudinal groove, rocker arms pivotally

OVERSIZE PAGE – SEE NEXT FRAME
FOR REMAINDER OF PAGE

of the work holder, a stationary guide engaging said arm at its other end, an oscillatory tool holder mounted on the rocker arm with its axis opposite and parallel with the axis of the work holder and provided with a cutting tool having its point at the center of oscillation, a cam adapted to move the rocker arm transversely to the work, a cam adapted to oscillate the tool holder and maintain the tool at the proper angle to the work, and means for rotating the work holder and cams synchronously.

10. In a lathe the combination of an oscillatory tool holder, an angularly adjustable segmental toothed cutting tool pivotally mounted in the tool holder with its periphery intersecting the axis of oscillation of the tool holder, and an adjusting screw swiveled in the tool holder transversely to the tool pivot and engaging the teeth of the tool.

11. In a lathe the combination of an oscillatory tool holder, and a segmental tool angularly adjustable in said holder on an axis inclined to the axis of the holder, and having a radial cutting edge terminating with its periphery at the center of oscillation of the holder.

12. In a lathe the combination of a frame, a work carriage guided thereon, means for feeding the carriage, a head stock mounted on the carriage, a rotary spindle journaled in the head stock and provided at one end with a centering work holder and at the other with a driving connection, a tail stock adjustable on the carriage towards and from the head stock and provided with an axially adjustable center in axial alignment with the spindle, tool supporting members movable transversely to the carriage, oscillatory tool holders mounted on said supporting members and provided with cutting tools, work shaping and tool adjusting cams, and means for rotating the work holder and cams synchronously.

13. In a lathe the combination of a frame, a carriage mounted thereon and provided with a rotary work holder, means for feeding the carriage, a bar mounted on the frame, rocker arms pivotally mounted on said bar, cutting tools carried by said arms and movable therewith transversely to the path of the carriage, cams adapted to shift the arms with the tools relative to the work for producing the desired shapes of parts on which the tools operate, and means for rotating the work holder and cams synchronously.

14. In a lathe the combination of a frame, a carriage mounted thereon and provided with a rotary work holder, means for feeding the carriage, a stationary bar mounted on the frame, rocker arms pivotally mounted on said bar and movable transversely to the carriage travel, oscillatory tool holders carried by said arms and provided with cutting tools having their points at the center of oscillation of the tool holders, levers pivoted on the rocker arms and geared with the tool holders, a shaft provided with tool shifting and tilting cams adapted to actuate said rocker arms and levers, and means for rotating the work holder and cam shaft synchronously.

15. In a lathe the combination of a frame, a carriage guided thereon and provided with a rotary work holder, means for feeding the carriage, rocker arms pivotally mounted on an axis parallel with the carriage travel and separately adjustable lengthwise of said axis, angularly adjustable cutting tools carried by the rocker arms, a shaft parallel with the pivot axis of the rocker arms and provided with tool shifting and tilting cams adjustable lengthwise thereof, and means for rotating the tool holder and cam shaft synchronously.

16. In a lathe the combination of a frame, a carriage guided thereon and provided with a rotary work holder, means for feeding the carriage, rocker arms pivotally mounted on the frame and provided with cutting tools movable therewith transversely to the travel of the carriage, cams for swinging the rocker arms, a shaft on which the cams are assembled removably mounted on the frame, and transmission gearing adapted to rotate the work holder and cam shaft synchronously and having a driving member with which the cam shaft is coaxially and detachably connected.

17. In a lathe the combination of a frame, a carriage guided on the frame and provided with a rotary work holder, means for feeding the carriage, tool supports movable transversely to the carriage travel, angularly movable tools carried by said supports, cams for shifting said supports with the tools relative to the work, cams for varying the angular relation of the tools to said supports, a saddle slidably mounted and guided on the carriage lengthwise thereof, a tool holder guided and movable on the saddle transversely to the carriage travel, an eccentric mounted on said saddle and connected with the tool holder, means for holding said saddle in a fixed position relative to the carriage, and transmission gearing adapted to rotate the work holder, cams and eccentric synchronously.

18. In a lathe the combination of a frame, a carriage guided on the frame and provided with a rotary work holder, means for feeding the carriage, a cylindrical bar mounted on the frame parallel with the carriage travel and formed with an undercut longitudinal groove, rocker arms pivotally mounted on said bar, guide blocks engaging said arms and adjustably fastened by bolts in the groove of the bar, a guide rail fixed

1667

on the frame parallel with said bar and formed with an undercut longitudinal groove, guides engaging the rocker arms and adjustably fastened by bolts in the groove of the guide rail, cutting tools adjustably mounted on the rocker arms and movable therewith transversely to the path of the carriage, cams arranged to actuate the rocker arms and shift the tools transversely to the travel of the carriage, and means for rotating the work holder and cams synchronously.

19. In a lathe the combination of a frame, a carriage mounted thereon and provided with a rotary work holder, a rotary screw parallel with the axis of the work holder for feeding the carriage, tool supporting members movable transversely to the travel of the carriage and provided with cutting tools, a shaft provided with cams for shifting the tool supporting members and tools transversely to the carriage travel, transmission gearing adapted to rotate the work holder and cam shaft synchronously, and comprising a screw actuating member, and a clutch for operatively connecting said member with the transmission gearing.

20. In a lathe the combination of a frame, a carriage mounted thereon and provided with a rotary work holder, tool supporting members movable transversely to the travel of the carriage and provided with cutting tools, cams for actuating said tool supporting members, a tool base slidably mounted on the carriage lengthwise thereof, a transversely movable tool slide and holder mounted on said base, an eccentric mounted on said base and connected with the tool slide and holder, and transmission gearing adapted to rotate the work holder and cams synchronously, and comprising a driving member for said eccentric, and a shaft connecting the eccentric with the transmission gearing parallel with the carriage travel and having an angularly adjustable connection with its driving member.

21. In a lathe the combination of a frame, a carriage mounted thereon and provided with a rotary spindle and work holder, a screw for feeding the carriage, tool supporting members movable transversely to the carriage travel and provided with cutting tools, a cam shaft arranged parallel with the carriage travel and provided with cams for operating the tool supporting members, transmission gearing adapted to rotate the work holder and cams synchronously and comprising driving members for the work holder, feed screw and cams, the driving member for the work holder having an axially sliding connection with the spindle, supporting members movable transversely to the travel of the carriage and provided with cutting tools, cams for actuating the tool supporting members, transmission gearing comprising a main driving member and adapted to rotate the work holder and cams synchronously and to feed the carriage, means for manually traversing the carriage in either direction, means for controlling the operation of the work holder and cams, and manually operated means for connecting the carriage with the transmission gearing independently of the work holder and cams.

23. In a lathe the combination of a carriage provided with a rotary work holder, supporting members movable transversely to the travel of the carriage and provided with cutting tools, tool shifting cams adapted to actuate said supporting members, means for rotating the work holder and cams synchronously, carriage feeding mechanism, and automatic means for stopping the carriage at a predetermined point in its traverse.

24. In a lathe the combination of a carriage provided with a rotary work holder, supporting members movable transversely to the travel of the carriage and provided with cutting tools, tool shifting cams adapted to actuate said supporting members, means for rotating the work holder and cams synchronously, carriage feeding mechanism, and adjustable means adapted to automatically stop the feed of the carriage at different points in its traverse.

25. In a lathe the combination of a carriage provided with a rotary work holder, supporting members movable transversely to the travel of the carriage and provided with cutting tools, tool shifting cams adapted to actuate said supporting members, means for rotating the work holder and cams synchronously, a screw for feeding the carriage, a screw driving member, a clutch for operatively connecting the screw and its driving member, means tending to disengage the clutch, means for locking the clutch in engagement, and a trip on the carriage adapted to disengage the locking means and release the clutch at a certain point in the traverse of the carriage.

26. In a lathe the combination of a carriage provided with a rotary work holder, supporting members movable transversely to the travel of the carriage and provided with cutting tools, cams for actuating the tool supporting members and shifting the tools relative to the work, means for rotating the work holder and cams synchronously, a rotary driving member, a feed screw for transversing the carriage, a clutch

OVERSIZE PAGE – SEE NEXT FRAME
FOR REMAINDER OF PAGE

on the frame parallel with said bar and formed with an undercut longitudinal groove, guides engaging the rocker arms and adjustably fastened by bolts in the groove of the guide rail, cutting tools adjustably mounted on the rocker arms and movable therewith transversely to the path of the carriage, cams arranged to actuate the rocker arms and shift the tools transversely to the travel of the carriage, and means for rotating the work holder and cams synchronously.

19. In a lathe the combination of a frame, a carriage mounted thereon and provided with a rotary work holder, a rotary screw parallel with the axis of the work holder for feeding the carriage, tool supporting members movable transversely to the travel of the carriage and provided with cutting tools, a shaft provided with cams for shifting the tool supporting members and tools transversely to the carriage travel, transmission gearing adapted to rotate the work holder and cam shaft synchronously, and comprising a screw actuating member, and a clutch for operatively connecting said member with the transmission gearing.

20. In a lathe the combination of a frame, a carriage mounted thereon and provided with a rotary work holder, tool supporting members movable transversely to the travel of the carriage and provided with cutting tools, cams for actuating said tool supporting members, a tool base slidably mounted on the carriage lengthwise thereof, a transversely movable tool slide and holder mounted on said base, an eccentric mounted on said base and connected with the tool slide and holder, and transmission gearing adapted to rotate the work holder and cams synchronously, and comprising a driving member for said eccentric, and a shaft connecting the eccentric with the transmission gearing parallel with the carriage travel and having an angularly adjustable connection with its driving member.

21. In a lathe the combination of a frame, a carriage mounted thereon and provided with a rotary spindle and work holder, a screw for feeding the carriage, tool supporting members movable transversely to the carriage travel and provided with cutting tools, a cam shaft arranged parallel with the carriage travel and provided with cams for operating the tool supporting members, transmission gearing adapted to rotate the work holder and cams synchronously and comprising driving members for the work holder, feed screw and cams, the driving member for the work holder having an axially sliding connection with the spindle, and a clutch for connecting and disconnecting the feed screw and its driving member.

22. In a lathe the combination of a carriage provided with a rotary work holder, supporting members movable transversely to the travel of the carriage and provided with cutting tools, cams for actuating the tool supporting members, transmission gearing comprising a main driving member and adapted to rotate the work holder and cams synchronously and to feed the carriage, means for manually traversing the carriage in either direction, means for controlling the operation of the work holder and cams, and manually operated means for connecting the carriage with the transmission gearing independently of the work holder and cams.

23. In a lathe the combination of a carriage provided with a rotary work holder, supporting members movable transversely to the travel of the carriage and provided with cutting tools, tool shifting cams adapted to actuate said supporting members, means for rotating the work holder and cams synchronously, carriage feeding mechanism, and automatic means for stopping the carriage at a predetermined point in its traverse.

24. In a lathe the combination of a carriage provided with a rotary work holder, supporting members movable transversely to the travel of the carriage and provided with cutting tools, tool shifting cams adapted to actuate said supporting members, means for rotating the work holder and cams synchronously, carriage feeding mechanism, and adjustable means adapted to automatically stop the feed of the carriage at different points in its traverse.

25. In a lathe the combination of a carriage provided with a rotary work holder, supporting members movable transversely to the travel of the carriage and provided with cutting tools, tool shifting cams adapted to actuate said supporting members, means for rotating the work holder and cams synchronously, a screw for feeding the carriage, a screw driving member, a clutch for operatively connecting the screw and its driving member, means tending to disengage the clutch, means for locking the clutch in engagement, and a trip on the carriage adapted to disengage the locking means and release the clutch at a certain point in the traverse of the carriage.

26. In a lathe the combination of a carriage provided with a rotary work holder, supporting members movable transversely to the travel of the carriage and provided with cutting tools, cams for actuating the tool supporting members and shifting the tools relative to the work, means for rotating the work holder and cams synchronously, a rotary driving member, a feed screw for transversing the carriage, a clutch for connecting the feed screw with said driving member, and a clutch controlling trip adjustable on the carriage in the direction of its travel and adapted to automatically stop

the feed screw at a variable point in the traverse of the carriage.

27. In a lathe the combination of a carriage provided with a rotary work holder, supporting members movable transversely to the travel of the carriage and provided with cutting tools, cams adapted to actuate the tool supporting members and to shift the tools relative to work on the carriage, a feed screw for traversing the carriage, transmission gearing comprising a main and auxiliary driving members for the work holder, cams and feed screw, a clutch controlling the connection of the auxiliary driving members with the main driving member, a second clutch controlling the connection of the feed screw with one of the auxiliary driving members, means for manually engaging the clutches separately, and a clutch controlling trip adapted to release both clutches at a predetermined point in the traverse of the carriage.

28. In a lathe the combination of a rotary work holder, a tool supporting member movable transversely to the axis of the work holder, a tool holder mounted and angularly adjustable on said member, work-shaping and tool-adjusting cams cooperating with the tool supporting member and tool holder to vary the distance between the tool and the axis of the work holder and to maintain the proper angular relation of the tool to the work, and means for rotating the work holder and cams synchronously.

29. In a structure of the class described, the combination of a tool support, a tool mounted on said support for swinging movement, a pattern cam corresponding to the shape of the cam to be cut for controlling said support, and means for swinging said tool whereby its cutting position relative to the work is maintained as the work revolves.

30. In a structure of the class described, the combination of a tool support, a tool mounted on said support for swinging movement, a pattern cam for the cam to be cut, said pattern cam being adapted to control said support, and means for swinging said tool in such wise as to maintain the same in proper cutting position relative to the work as the latter revolves.

31. In a machine of the character described, the combination of a tool support, a tool mounted on said support for angular movement relatively thereto, and means for moving said support and said tool in such wise as to cause the latter to produce a body of irregular form.

32. In a machine of the character described, the combination of a tool support, a tool mounted on said support for angular movement relatively thereto, and cams for

33. In a machine of the character described, the combination of a work holder, a tool support movable transversely to the axis of the work holder, a tool holder mounted on said support for angular movement relatively thereto, a tool carried by said holder, means for moving said support and said tool holder in such wise as to cause said tool to produce a body of irregular form, and means for actuating said first-mentioned means in synchronism with the rotary movements of the work holder.

34. In a machine of the character described, the combination of a rotary work holder, a tool support movable transversely to the axis of the work holder, a tool holder mounted on said support for angular movement relatively thereto, a tool carried by said holder, cams for moving said support and said tool holder in such wise as to cause said tool to produce a body of non-circular form, and means for actuating said cams in synchronism with the rotary movements of the work holder.

35. In a lathe, the combination of a movable tool support, a tool tiltably mounted on said support, and cams for moving said support and tool respectively for causing the latter to delineate a predetermined contour of non-circular form.

36. In a lathe, the combination of a movable tool support, a tool tiltably mounted on said support, and means for moving said support and tool respectively for causing the latter to delineate a predetermined contour of irregular form.

37. In a machine of the character described, the combination of a movable tool support, a tool mounted on said support for movement relatively thereto, a cam for controlling said support, and means for moving said tool angularly so as to prevent the same from assuming a non-cutting position relative to the work as the latter revolves.

38. The method of cutting an irregular form, consisting in bodily shifting a single point cutting tool toward and from the work and angularly tilting said tool relatively to its bodily shifting movement to retain the effective cutting position of the tool relative to the work during the cutting of the irregular form.

39. In a lathe, the combination of a work holder, a tool support movable in a plane transverse to the axis of the work holder, a spring urging said support in one direction, a cam acting to move said support in the opposite direction against the action of said spring, a tool holder pivotally mounted on said tool support, and a control cam for said tool holder adapted to swing the tool in synchronism with the movement of the support

OVERSIZE PAGE – SEE NEXT FRAME
FOR REMAINDER OF PAGE

the feed screw at a variable point in the traverse of the carriage.

27. In a lathe the combination of a carriage provided with a rotary work holder, supporting members movable transversely to the travel of the carriage and provided with cutting tools, cams adapted to actuate the tool supporting members and to shift the tools relative to work on the carriage, a feed screw for traversing the carriage, transmission gearing comprising a main and auxiliary driving members for the work holder, cams and feed screw, a clutch controlling the connection of the auxiliary driving members with the main driving member, a second clutch controlling the connection of the feed screw with one of the auxiliary driving members, means for manually engaging the clutches separately, and a clutch controlling trip adapted to release both clutches at a predetermined point in the traverse of the carriage.

28. In a lathe the combination of a rotary work holder, a tool supporting member movable transversely to the axis of the work holder, a tool holder mounted and angularly adjustable on said member, work-shaping and tool-adjusting cams cooperating with the tool supporting member and tool holder to vary the distance between the tool and the axis of the work holder and to maintain the proper angular relation of the tool to the work, and means for rotating the work holder and cams synchronously.

29. In a structure of the class described, the combination of a tool support, a tool mounted on said support for swinging movement, a pattern cam corresponding to the shape of the cam to be cut for controlling said support, and means for swinging said tool whereby its cutting position relative to the work is maintained as the work revolves.

30. In a structure of the class described, the combination of a tool support, a tool mounted on said support for swinging movement, a pattern cam for the cam to be cut, said pattern cam being adapted to control said support, and means for swinging said tool in such wise as to maintain the same in proper cutting position relative to the work as the latter revolves.

31. In a machine of the character described, the combination of a tool support, a tool mounted on said support for angular movement relatively thereto, and means for moving said support and said tool in such wise as to cause the latter to produce a body of irregular form.

32. In a machine of the character described, the combination of a tool support, a tool mounted on said support for angular movement relatively thereto, and cams for moving said support and said tool in such wise as to cause the latter to produce a body of non-circular form.

33. In a machine of the character described, the combination of a work holder, a tool support movable transversely to the axis of the work holder, a tool holder mounted on said support for angular movement relatively thereto, a tool carried by said holder, means for moving said support and said tool holder in such wise as to cause said tool to produce a body of irregular form, and means for actuating said first-mentioned means in synchronism with the rotary movements of the work holder.

34. In a machine of the character described, the combination of a rotary work holder, a tool support movable transversely to the axis of the work holder, a tool holder mounted on said support for angular movement relatively thereto, a tool carried by said holder, cams for moving said support and said tool holder in such wise as to cause said tool to produce a body of non-circular form, and means for actuating said cams in synchronism with the rotary movements of the work holder.

35. In a lathe, the combination of a movable tool support, a tool tiltably mounted on said support, and cams for moving said support and tool respectively for causing the latter to delineate a predetermined contour of non-circular form.

36. In a lathe, the combination of a movable tool support, a tool tiltably mounted on said support, and means for moving said support and tool respectively for causing the latter to delineate a predetermined contour of irregular form.

37. In a machine of the character described, the combination of a movable tool support, a tool mounted on said support for movement relatively thereto, a cam for controlling said support, and means for moving said tool angularly so as to prevent the same from assuming a non-cutting position relative to the work as the latter revolves.

38. The method of cutting an irregular form, consisting in bodily shifting a single point cutting tool toward and from the work and angularly tilting said tool relatively to its bodily shifting movement to retain the effective cutting position of the tool relative to the work during the cutting of the irregular form.

39. In a lathe, the combination of a work holder, a tool support movable in a plane transverse to the axis of the work holder, a spring urging said support in one direction, a cam acting to move said support in the opposite direction against the action of said spring, a tool holder pivotally mounted on said tool support, and a control cam for said tool holder adapted to swing the tool in synchronism with the movement of the support and the rotation of the work.

40. In a lathe, the combination of a rotary work holder, a supporting member mov-

able transversely to the axis of the work holder, a spring acting on said supporting member to urge the same in one direction, a cam controlling the movement of said supporting member against the action of said spring, a tool holder mounted on said supporting member for swinging adjustment with respect thereto, an actuating cam therefor, and means for synchronously rotating said work holder and cams.

41. In a cam turning machine, a tool support, a single point cutting tool mounted on said support, means to move said tool toward and from the cam blank and to tilt the same to keep the cutting edge at an effective angle relative to the work to cut an irregular outline on the cam blank.

42. The combination of work holding means, a single point cutting tool, a support therefor automatically movable toward and from the axis of the holding means, means for moving said support and means for tilting said tool on said support.

In witness whereof we hereto affix our signatures.

CHARLES GORDON.
ALFRED W. REDLIN.

DISCLAIMER

1,542,803.—*Charles Gordon*, Milwaukee, Wis., and *Alfred W. Redlin*, Saginaw, Mich. LATHE. Patent dated June 16, 1925. Disclaimer filed February 24, 1930, by the patentees and the assignee by mesne assignments, *The Gordon Form Lathe Company*.

Hereby enter this disclaimer and disclaim from the scope of claims 23 and 24 of said patent all lathes and other machine tools, except those employing single-point cutting tools for the turning of irregular or non-geometric forms out of metal.

[*Official Gazette March 25, 1930.*]

PLAINTIFF'S EXHIBIT 5

In the District Court of the United States
Eastern District of Michigan

The Gordon Form Lathe Company,
Plaintiff,

vs.

Walcott Machine Company, formerly Walcott Lathe Company,
Defendant,

By: Simons, J.
In Equity
No. 1644

AMENDED FINAL DECREE

Appeal having been allowed from the decree of this Court entered October 20, 1927, to the United States Circuit Court of Appeals for the Sixth Circuit, such appeal having been heard and disposed of by said Court of Appeals, and the mandate having come down to this Court, and such Court of Appeals having reversed this Court on the question of non-infringement, it is hereby ordered, adjudged and decreed as follows:

(1) That the decree of this Court entered October 20, 1927, dismissing said Bill of Complaint with costs to Defendant is hereby vacated.

(2) That Letters Patent of the United States to Charles Gordon and Alfred W. Redlin, No. 1,542,803, dated June 16, 1925, for Lathe is good and valid in law as to claims 1, 2, 28, 29, 30, 33, 34, 39, 40, 41 and 42 thereof.

(3) That the said Charles Gordon and Alfred W. Redlin named in the said patent were the first, true, original and joint inventors of the inventions, improvements and combinations described in said patent and in said claims.

(4) That the Plaintiff, the Gordon Form Lathe Company, is the lawful owner of the entire right, title and interest in and to said inventions, and in and to said Letters Patent, 1,542,803.

(5) That the Defendant, Walcott Machine Company, formerly Walcott Lathe Company, has infringed upon said Letters Patent, and particularly upon the above named claims thereof by constructing, or causing to be constructed and/or by using and/or by selling, or causing to be sold, within the Eastern District of Michigan, Southern Division, and elsewhere in the United States, machines or lathes embodying the inventions set forth in the said claims of said patent.

(6) It being represented to the Court that the Defendant is not financially able to respond to a money judgment for damages and/or profits, no accounting is ordered, but on the contrary it is ordered that the Plaintiff recover of the Defendant nominal damages in the sum of One Dollar ($1.00), without reference to a Master.

(7) That an injunction be issued out of and under the seal of this Court directed to Defendant, Walcott Lathe Company, each of its directors, officers, attorneys, servants, agents, clerks, employees and workmen, and all their privies, and each and everyone of them enjoining and restraining them, during and throughout the remainder of the term of said Letters Patent No. 1,542,803, from directly or indirectly constructing, causing to be constructed, and/or using and/or selling, or causing to be used or sold, or advertising for sale, without the written license and consent of the Plaintiff, lathes like Defendant's cam turning and crank shaft contour lathes illustrated and described in the patent application of Herman W. Melling, Serial No. 416,750, filed October 13, 1920, and in Plaintiff's Exhibits K and M, respectively, and any other lathe, machine, apparatus, article, device or parts

and/or combinations containing, employing or embodying said inventions and improvements described in said Letters Patent No. 1,542,803, and particularly referred to in claims 1, 2, 28, 29, 30, 33, 34, 39, 40, 41 and 42 thereof, or any of them, or any lathe, machine, apparatus, article, device, or parts intended to be used, or capable only of use, in a combination infringing said patent, and from infringing, or contributing to infringements upon, or in violation of said Letters Patent in any way whatsoever.

(8) That Plaintiff do recover of the Defendant Four Thousand Dollars ($4,000.00) as its costs in this Court and the Court of Appeals and judgment may be had against the Defendant for such Four Thousand Dollars ($4,000.00).

(9) That all bonds filed in this cause be discharged and that the Clerk of this Court so notify the bonding companies.

(10) That complaint is dismissed without prejudice as to claims 12, 23 and 24.

(Sgd.) Charles C. Simons,
United States District Judge.

Detroit, Michigan, June 24, 1929.

PLAINTIFF'S EXHIBIT 40

Bottum, Hudnall, Lecher & McNamara

(Letterhead.)

Milwaukee, Wis.
July 1, 1925.

To Whom It May Concern:

Subject: Infringement of Patent No. 1,542,803, Improvement in Lathes.

Representing our client, The Gordon Form Lathe Co., we beg to call your attention to the fact that, on June 16, 1925, the United States Patent Office issued a patent, of that date, No. 1,542,803, to the Gordon Form Lathe Co., as assignee of the applicants, Charles Gordon and Alfred W. Redlin. This patent was applied for July 19, 1920, but its issue was delayed by a strenuously conducted interference proceeding in the Patent Office. The contestant took every appeal allowable in the Patent Office, including the Court of Appeals for the District of Columbia, and each and every proceeding was decided in favor of complete recognition of all the Gordon and Redlin claims.

Forty-two claims were allowed, and they cover the invention very broadly, even to the extent of the method of turning irregular forms with a single point cutting tool.

The Gordon Form Lathe Co., owners of this patent, are willing to arrange terms with users of infringing machines on a reasonable basis, and invite correspondence through this office with reference to same; otherwise it will be necessary for us to institute suits for infringement, in which we shall apply for and expect to obtain

proper injunctions against continued infringements. This is not stated as a threat, but as a plain statement of our client's legal position, and the extension of the olive branch of peace to all who will recognize the just rights of our clients.

If interested, please let us hear from you as promptly as practicable.

Very truly yours,

Bottum, Hudnall, Lecher & McNamara.

1674

Pl E 41

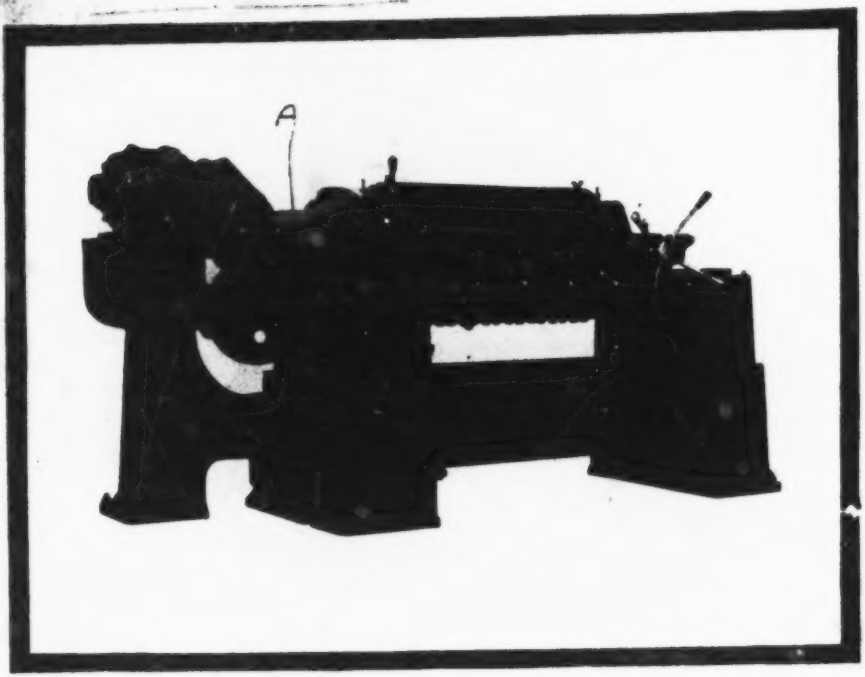

Melling Cam Turning Lathe

THE GORDON FORM LATHE COMPANY
- VS -
FORD MOTOR COMPANY
IN EQUITY NO. 4664
PLAINTIFF'S EXHIBIT No. 41

Manufactured by

Walcott Lathe Company

Jackson, Michigan

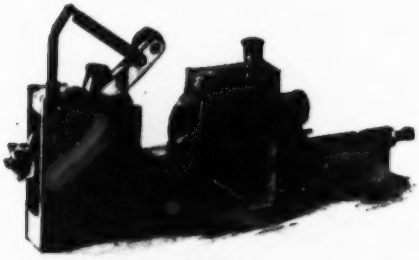

Fig. 1
Cutting Tool Assembly Complete

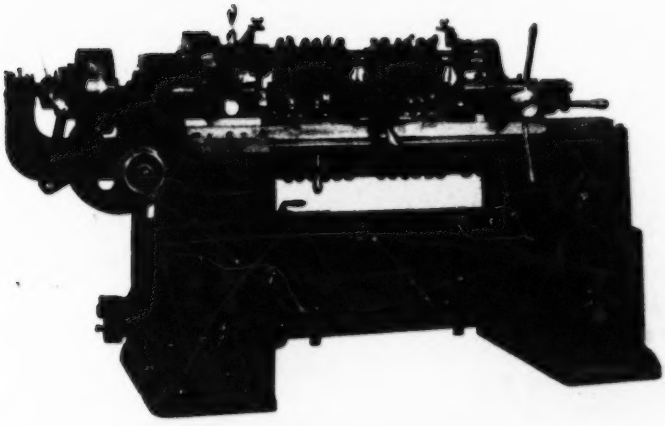

Fig. 2
Front view of Milling Cam Turning Lathe adapted to belt drive

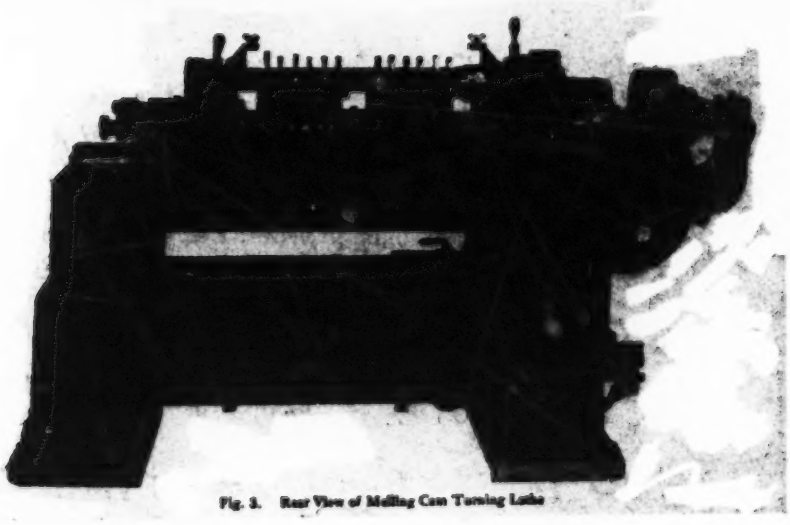

Fig. 3. Rear View of Milling Cam Turning Lathe

PLAINTIFF'S EXHIBIT 42

TRACTOR MANUFACTURERS

Advance-Rumely Thresher Co., LaPorte, Ind.
Allied Truck & Tractor Co., Minneapolis, Minn.
Allis-Chalmers Mfg. Co., Milwaukee, Wis.
Aultman & Taylor Machinery Co., Mansfield, Ohio.
Austin Mfg. Co., 400 N. Michigan Ave., Chicago, Ill.
Avery Co., Peoria, Ill.
Bates Machine & Tractor Co., Joliet, Ill.
Bates Tractor Co., Lansing, Mich.
C. L. Best Tractor Co., San Leandro, Cal.
Blumberg Motor Mfg. Co., San Antonio, Tex.
Bryan Harvester Co., Peru, Ind.
Buckeye Mfg. Co., Anderson, Ind.
Massey-Harris Co., Racine, Wis.
J. I. Case Threshing Machine Co., Racine, Wis.
Cleveland Tractor Co., Cleveland, Ohio.
Dart Truck & Tractor Corp., Waterloo, Ia.
Dayton-Dowd Co., Quincy, Ill.
Deere & Co., Moline, Ill.
Depue Bros. Mfg. Co., Clinton, Ia.
Eagle Mfg. Co., Appleton, Wis.
Electric Wheel Co., Quincy, Ill.
Emerson-Brantingham Impl. Co., Rockford, Ill.
Fageol Motors Co., Oakland, Cal.
Ford Motor Co., Detroit, Mich.
Hart-Parr Co., Charles City, Ia.
Holt Mfg. Co., Inc., Peoria, Ill. and Stockton, Cal.
International Harvester Co., Chicago, Ill.
Keystone Iron & Steel Works, Los Angeles, Cal.
Kinnard & Sons Mfg. Co., Minneapolis, Minn.
John Lauson Mfg. Co., New Holstein, Wis.
Massey-Harris Co., Ltd., Toronto, Ontario, Canada.
Midwest Engine Co., Indianapolis, Ind.
Minneapolis Steel & Machinery Co., Minneapolis, Minn.
Minneapolis Threshing Machine Co., Hopkins, Minn.

Moline Plow Co., Moline, Ill.
Monarch Tractors, Watertown, Wis., Division of Allis Chalmers Co., Springfield, Ill.
Nichols & Shepard Co., Battle Creek, Mich.
Rock Island Plow Co., Rock Island, Ill.
The Russell & Co., Massillon, Ohio.
Square Turn Tractor Co., Norfolk, Neb.
Stockton Tractor Co., Stockton, Cal.
Topp-Stewart Tractor Co., Clintonville, Wis.
Toro Mfg. Co., Minneapolis, Minn.
Velie Motors Corporation, Moline, Ill.
Wichita Motors Co., Wichita Falls, Texas.

Automobiles

Passenger, Touring, etc., Gasoline

Conn.: Bridgeport,
Locomobile Co. of America, Inc.
Ill.: Chicago,
Yellow Cab Mfg. Co., 5801 Dickens Ave.
Ill.: East Moline,
R. & V. Motor Co.
Ind.: Auburn,
Auburn Automobile Co.
Ind.: Connersville,
Lexington Motor Co.
McFarlan Motor Corp.
Ind.: Elkhart,
Elcar Motor Co.
Ind.: Evansville,
Hercules Corp.
Ind.: Indianapolis,
Bull Tractor-Madison Motors Corp.
Duesenberg Automobile & Motors Co., Washington & Harding Sts.
H. C. S. Motor Car Co., 1411 N. Capitol.
National Motors Corp., 22nd & Monon R. R.

Nordyke & Marmon Co., 1101 W. Morris.
Stutz Motor Car Co. of America, Inc., Capitol Ave. & 10th.

Ind.: Kokomo,
Apperson Bros. Automobile Co.
Haynes Automobile Co.

Ind.: Richmond,
Davis Motor Car Co., Geo. W.

Ind.: South Bend,
Studebaker Corp.

Ky.: Louisville,
Ky. Wagon Mfg. Co., 3d & "K" Sts.

Mass.: Brockton,
Sterling Motor Car Co.

Mass.: Chicopee Falls,
Rauch & Lang, Inc.
Stevens-Duryea, Inc.

Mass.: Springfield,
Rolls-Royce of America, Inc.

Mich.: Detroit,
Cadillac Motor Car Co., 2860 Clark St.
Chevrolet Motor Co., General Motors Bldg.
Chrysler Motor Corp., 341 Massachusetts Ave. 7900 Jos. Campau Ave.
General Motors Corp., General Motors Bldg.
Gray Motor Corp., Mack & R. R.
Hudson Motor Co., 12601 E. Jefferson Ave.
Hupp Motor Car Corp.
Lincoln Motor Co., Warren & Livernois.
Packard Motor Car Co.
Graham-Paige Motor Car Co., McKinstry & Fort.

Mich.: Flint,
Buick Motor Co.
Flint Motor Co.

Mich.: Lansing,
Olds Motor Works.
Reo Motor Car Co.

Mich.: Marysville,
Wills Sainte Claire, Inc.
Mich.: Pontiac,
Oakland Motor Car Co.
Mo.: St. Louis,
Gardner Motor Co., Inc., Main & Rutger.
Moon Motor Car Co., 400 N. Main.
N. Y.: Buffalo,
Pierce-Arrow Motor Car Co., 1695 Elmwood Ave.
N. Y.: Long Island City,
Brewster & Co., Inc.
N. Y.: New York City,
Driggs Ordinance & Mfg. Corp., 19 W. 44th.
Durant Motors, Inc., 1819 Broadway.
Fiat Company, 150 W. 57th.
N. Y.: Rochester,
Cunningham, James, Son & Co.
N. Y.: Syracuse,
Franklin, H. H. Mfg. Co.
Ohio: Cincinnati,
Sayers & Scovill Co., Gest & B. & O. R. R.
Ohio: Cleveland,
Chandler Motor Car Co., East 131st.
Cleveland Automobile Co., Euclid Ave. & London Rd.
Jordon Motor Car Co., 1070 E. 152nd.
Peerless Motor Car Co., Quincy Ave. & East 93rd.
Rollins Motors Co., Lamb & Euclid Aves.
Stearns Co., F. B., Euclid Ave. & Lakeview Road.
Ohio: Springfield,
Westcott Motor Car Co.
Ohio: Toledo,
Willys-Overland, Inc.
Okla.: Tulsa,
Witt-Thompson Motor Co.
Pa.: Wilkes-Barre,
Owen Magnetic Motor Car Corp.
Texas: Dallas,
Little Motor Kar Co., Ltd.

Va.: Lynchburg,
Piedmont Motor Car Co.
Wis.: Hartford,
Kissel Motor Car Co.
Wis.: Kenosha,
Nash Motors Co.

Motors
Airplane, Aviation & Flying Machine

Cal.: Oakland,
Union Gas Engine Co.
Cal.: San Francisco,
Hall-Scott Motor Co., Crocker Bldg.
N. J.: Paterson,
Wright Aeronautical Corp.
N. Y.: Buffalo,
Curtiss Aeroplane & Motor Corp., 74 Kail.
N. Y.: Long Island City,
General Vehicle Co., Inc.

Motors
Gasoline, Automobile, Motor Boat, etc.

Ill.: Chicago,
Excelsior Motor Mfg. & Supply Co., 3701 Cortland.
Ill.: Harvey,
Buda Company, The.
Ind.: Anderson,
Dart Mfg. Co.
Laurel Motors Corp.
Ind.: Connersville,
Ansted Engineering Co.
Ind.: Indianapolis,
Allison Engineering Co., Main & 13th Speedway.
Showers & Umphrey, Shelby & Georgia.
Ind.: Marion,
Rutenber Motor Co.

Iowa: Clinton,
Climax Engineering Co.
Mass.: Springfield,
Knox Motors Co.
Mich.: Detroit,
Continental Motors Corp., 12301 Jefferson Ave.
Golden, Belknap & Schwarts Co., 5432 W. Grand River Ave.
Hinkley Motors, Inc., High & Benson Sts.
Kermath Mfg. Co., 5880 Commonwealth.
Northway Motor & Mfg. Co., Holbrook Ave. & G. T. R. R.
Turner & Moore Mfg. Co., 660 Merritt Ave.
Mich.: Saginaw,
Erd Motors Corp.
Wilcox Motor & Mfg. Co.
Minn.: Red Wing,
Red Wing Motor Co.
N. Y.: Buffalo,
Augustine Automatic Rotary Engine Co., 1862 Elmwood Ave.
Sterling Engine Co., 1250 Niagara.
N. Y.: North Tonawanda,
Herschell-Spillman Motor Car.
Brennan Motor Mfg. Co.
Ohio: Cleveland,
Chandler Motor Car Co.
Pa.: Pittsburgh,
Pittsburgh Model Engine Co., 7229 McPherson.
Pa.: Williamsport,
Lycoming Mfg. Co.
Wis.: Milwaukee,
Evinrude Motor Co., 805 Evinrude Block.
Wis.: Oshkosh,
Universal Motor Co.
Wis.: Port Washington,
Gilson Mfg. Co.

Motors

Marine, Launch, Boat, etc., Gasoline

Cal.: Oakland,
Standard Gas Engine Co.
Cal.: San Francisco,
Hall-Scott Motor Car Co., Crocker Bldg.
Conn.: Bridgeport,
Automatic Machine Co.
Conn.: Coscob,
Palmer Bros. Engines, Inc.
Ill.: Chicago,
Sears, Roebuck & Co., Arlington & Homan Aves.
Mich.: Detroit,
Scripps Motor Co., 5817 Lincoln Ave.
N. Y.: Buffalo,
Buffalo Gasolene Motor Co., 1280 Niagara.
Ohio: Portsmouth,
Reliable Tractor & Engine Co.

Shafts

Cam, for Gasoline Motors, etc.

Cal.: Los Angeles,
Llewellyn Iron Works, N. Main & Redondo.
Ill.: Blue Island,
Modern Die & Drop Forge Co., 1800 W. 139th St.
Ill.: Chicago,
Atlas Forgings Co., 55th Court.
Mich.: Jackson,
Jackson Motor Shaft Co.
Mich.: Muskegon,
Gordon, L. O., Mfg. Co.
Muskegon Motor Specialties Co.
N. Y.: Dunkirk,
Commercial Mach. Co., Inc.

Ohio: Alliance,
Transue & Williams Steel Forging Corp.
Ohio: Dayton,
Davis Sewing Machine Co., 470 Linden Ave.
Pa.: Sharon,
Driggs-Seabury Ordnance Co.
(Letter returned from Post Office)—wrong.

Tractor Assembly

Ill.: Rockford,
Cotta Transmission Corp.

Tractors

Ill.: Harvey,
Harvey Motor Truck Works.
Minn.: Minneapolis,
Twin City Co., 29th & Minnehaha.
N. Y.: Canastota,
Watson Wagon Co.
Ohio: Cleveland,
Lakewood Engineering Co., Berea Rd.

Motor Manufacturers

Automatic Machine Co., Bridgeport, Conn.
Badger Gas & Gasoline Engine Co., Kansas City, Kas.
Beaver Mfg. Co., Milwaukee, Wis.
Climax Engineering Co., Clinton, Ia.
Erd Motor Co., Saginaw, Mich.
Hercules Motor Mfg. Co., Canton, O.
Hinkley Motors Inc., Ecorse, Mich.
LeRoi Co., Milwaukee, Wis.
The Matthews Engineering Co., Sandusky, O.
Stearns Motor Mfg. Co., Ludington, Mich.
Waukesha Motor Co., Waukesha, Wis.
Wisconsin Motor Mfg. Co., Milwaukee, Wis.
Wellman Seaver Morgan Co., Motor Division, Cleveland, O.

DEFENDANT'S EXHIBIT 48

THE GORDON FORM LATHE CO.
170-22nd Street
Milwaukee, Wis.

Chas. Gordon
Pres. & Treas.

June 12, 1929

Ford Motor Company,
Detroit, Michigan.

Gordon & Redlin Patent 1,542,803,
June 16, 1925—Lathe

Gentlemen:

Under date of July 1, 1925, you were formally notified of the issuance of the above patent and of your infringement thereof. Since then as you undoubtedly know this patent has been in litigation. We now repeat this notice to you and again call your attention to the fact of your infringement.

In this connection, we enclose copy of the decision (dated April 12th, 1929) of the United States Circuit Court of Appeals for the Sixth Circuit in the case of the Gordon Form Lathe Co. v. Walcott Machine Co. The machines held to infringe the Gordon patent are the cam turning and crank shaft contour lathes manufactured by the Walcott Machine Co. of Jackson, Michigan. To much the same effect, in our view, as the decision of the Court of Appeals for the Sixth Circuit, is the decision of the Court of Appeals for the District of Columbia recorded in 4 Fed. (2d) 945 and that of Judge Westenhaver recorded in 14 Fed. (2d) 437.

We have made the National Automobile Chamber of Commerce the following offer:—

"(a) For the past we are willing to accept ¾c a cam and 1½c a crank cheek for each cam and each cheek respectively that has been turned by any of your members on any infringing machine, and

(b) For the future we are willing to release any infringing machine for the sum of $4,000.00 per machine.

We are willing at this time to accept settlement in accordance with the above for either the past or the future or both, but with the understanding, of course, that there will be no waiver of any claim we may have for the past if settlement for only the future is tendered, and vice versa."

If you are, or if you are not, a member of the National Automobile Chamber of Commerce, we would be willing to deal with your company direct on the same basis.

Unless prompt settlement is made, we shall be forced to proceed against you for an injunction and an accounting. Since the royalties and the settlement we offer are only a small percentage of the actual savings realized, or realizable, through the use of these machines (and it is our understanding of the law that we are entitled to all of the savings made by the use of these machines as compared with the old grinding method if we proceed to an accounting), we will leave this offer open to you for a limited time only.

We are informed that the Walcott Co. is now offering the industry slightly modified tool operating units, substantially as shown in Melling patent 1,634,550, for replacement of the units of the machines now in use. In the opinion of our Counsel, these units also constitute a clear infringement of the Gordon patent, especially some of the very claims thereof which were sustained

by the Court of Appeals of the Sixth Circuit, and we will proceed against all users of such machines under the Gordon and Redlin patent. For your future guidance, therefore, we also include notice to this effect at this time in order that you may be fully informed as to our position.

In the latter connection, we call your attention to such statements as the following in the enclosed copy of the opinion of the Sixth Circuit Court of Appeals:

> "The present patent is in a very true sense generic and the patentee a pioneer in this particular branch of the art."
>
> * * * * *
>
> "The patent is considered by us as a primary or generic one and the claims are entitled to great liberality of construction."

Yours truly,

The Gordon Form Lathe Co.,
per Chas. Gordon,
Pres. and Treas.

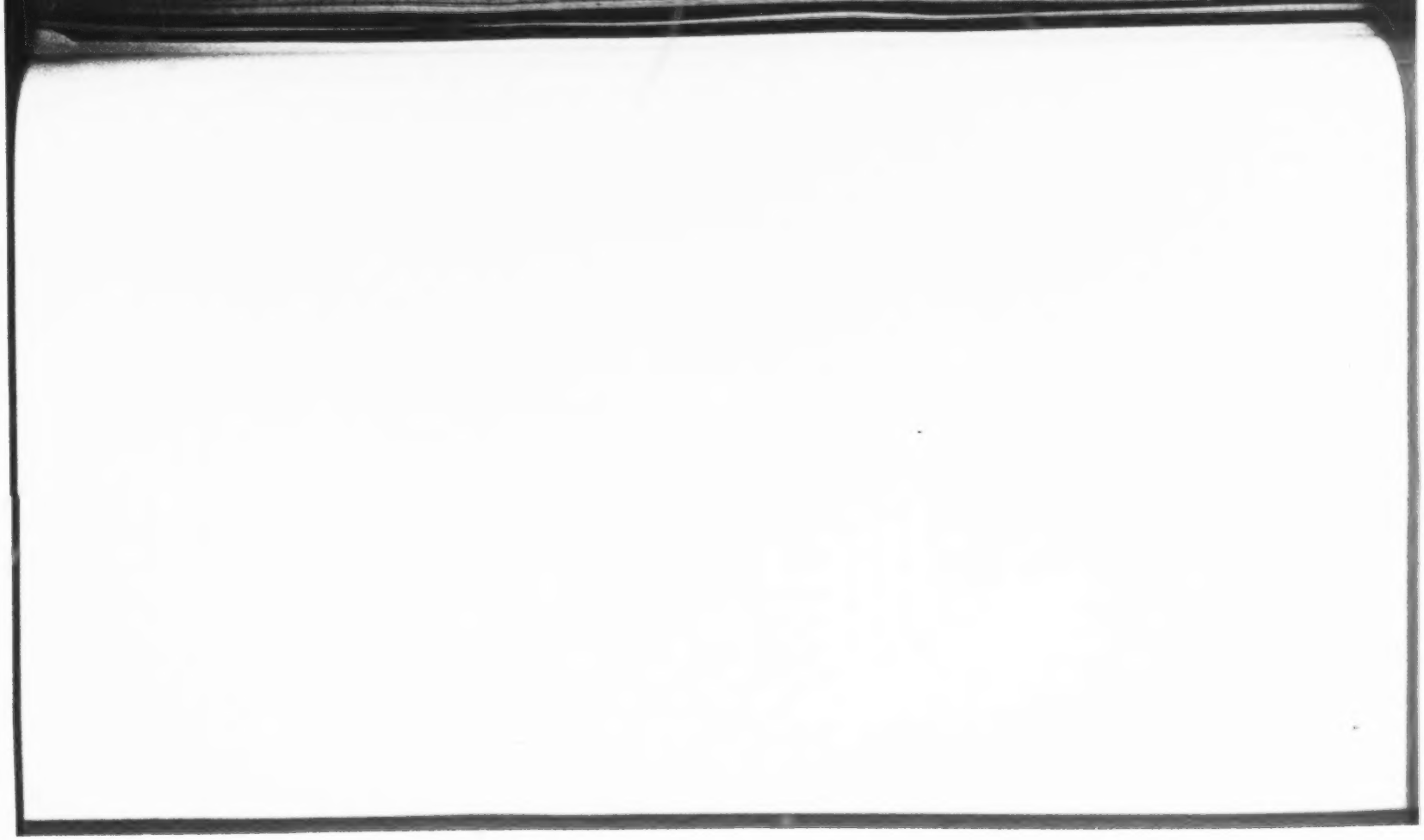

OVERSIZE PAGE – SEE NEXT FRAME
FOR REMAINDER OF PAGE

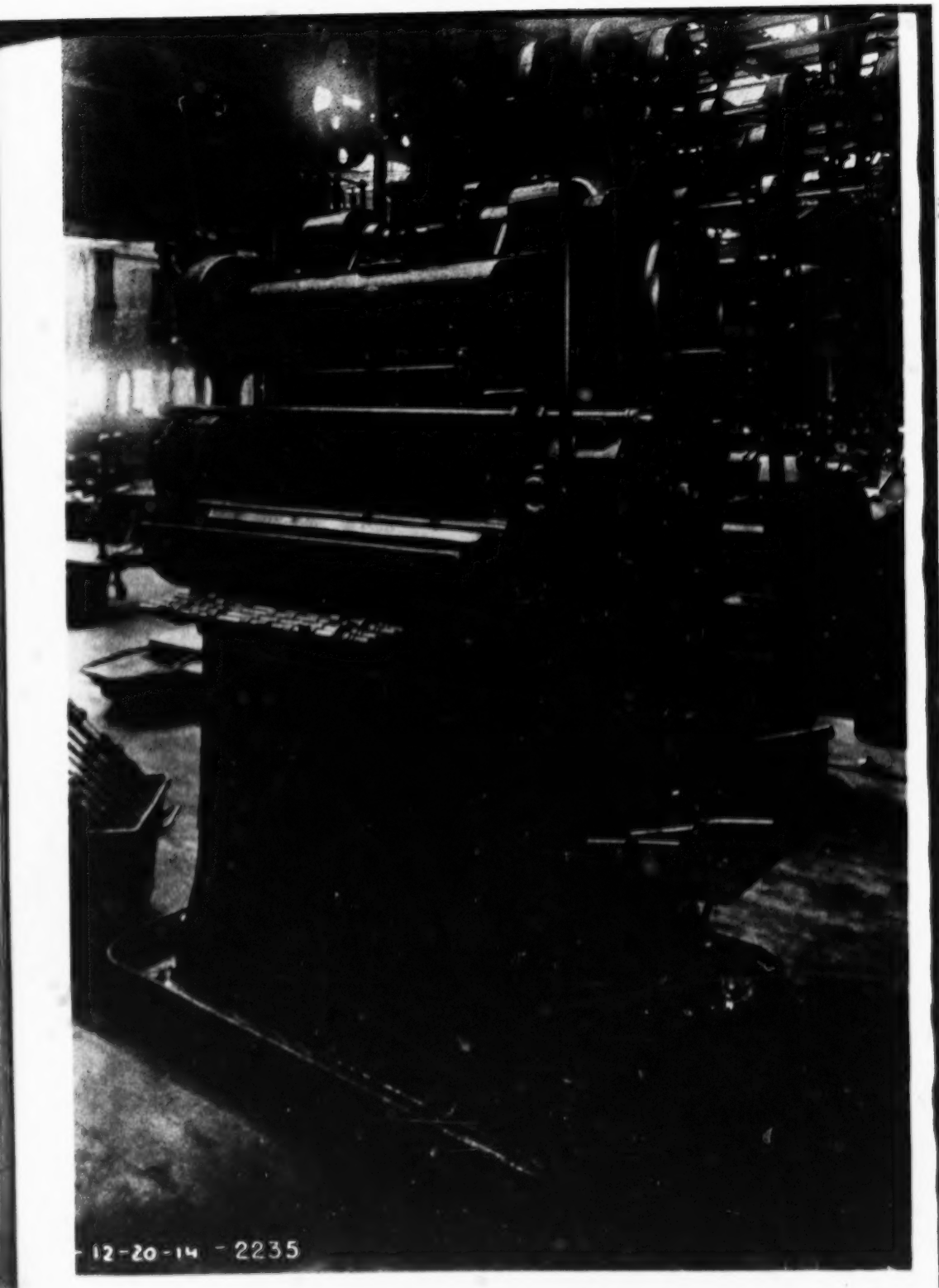

DEFENDANT'S EXHIBIT NO. 52

OVERSIZE PAGE – SEE NEXT FRAME
FOR REMAINDER OF PAGE

DEFENDANT'S EXHIBIT NO. 53

COPY BOUND VERTICALLY

OVERSIZE PAGE – SEE NEXT FRAME
FOR REMAINDER OF PAGE

FORD CAMSHAFT SHAPER

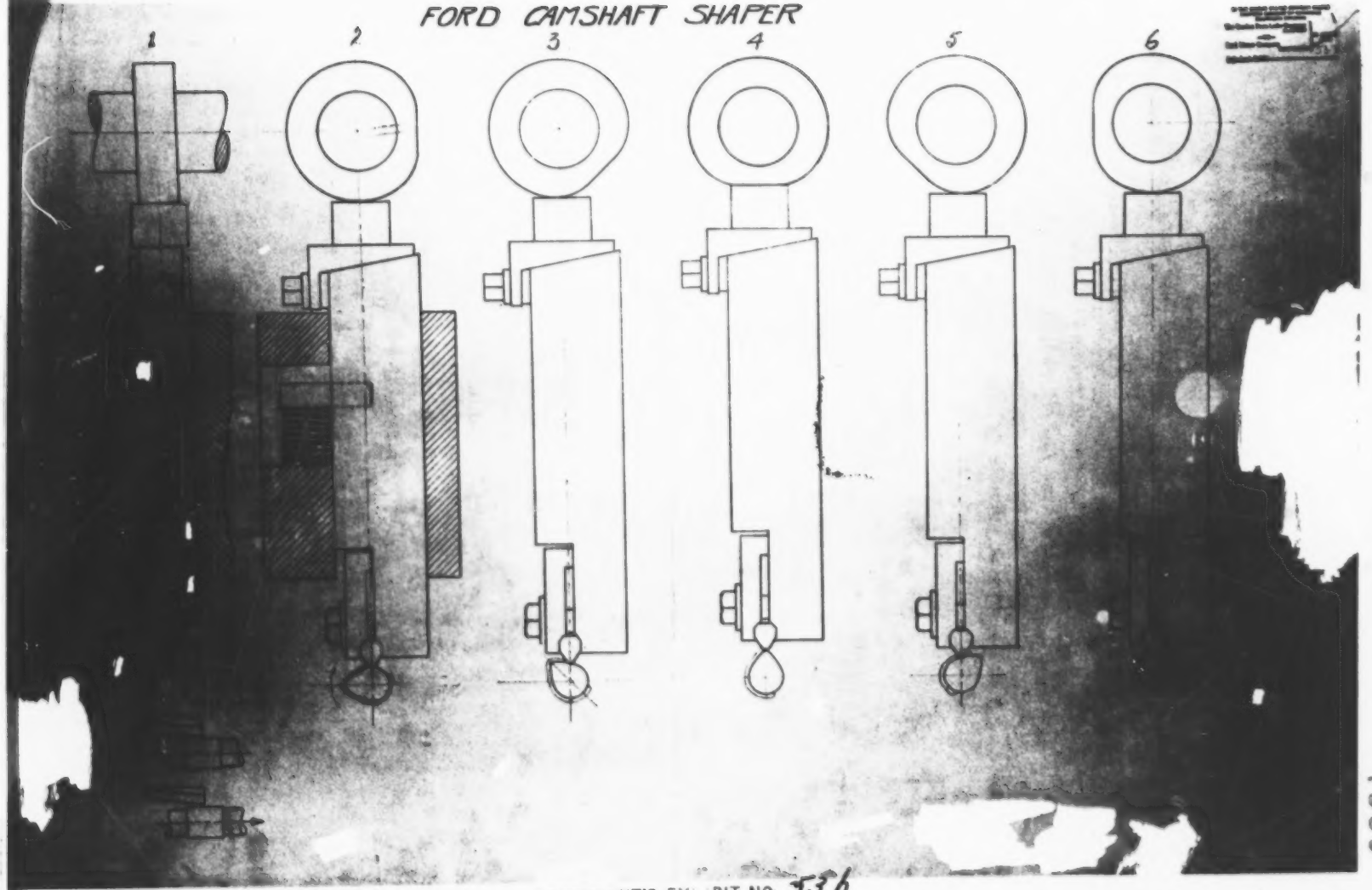

DEFENDANT'S EXHIBIT NO. 536

538

FORD CAMSHAFT SHAPER

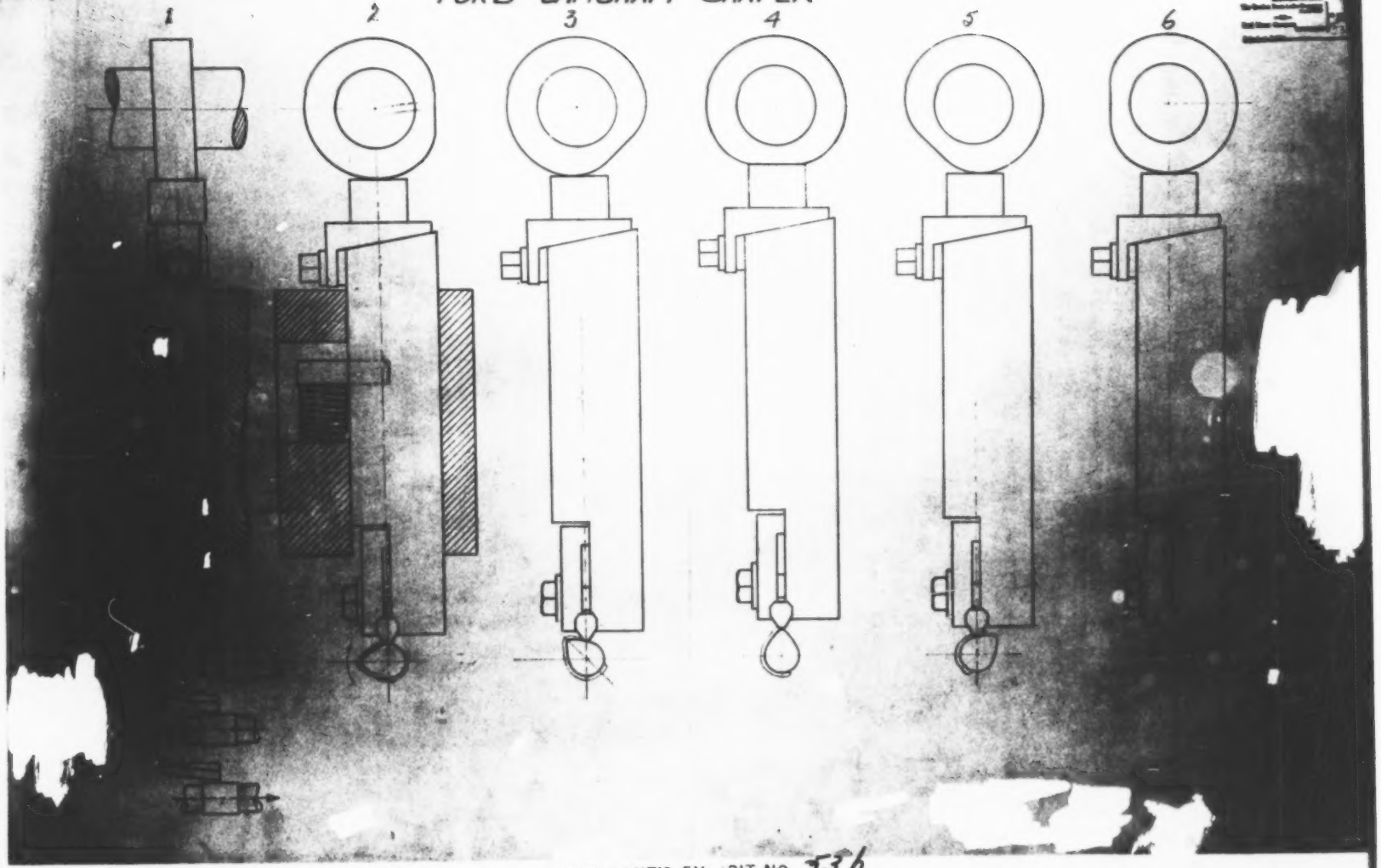

DEFENDANT'S EXHIBIT NO. 536

DEFENDANT'S EXHIBIT 55

Req. 11569

PERMANENT INVENTORY OF MACHINE TOOLS

Manufacturer's number Factory serial number 30236 Gordon Camshaft Turning Lathe; 2¼" swing; maximum distance between centers 36"; minimum distance between tool ars 1⅝"; spindle speeds 50 to 125 varying according to from of cam; feeds. 0046 to 008 per spindle revolution; to be arranged to turn our Tractor Camshaft F-446 as per B/P submitted; to come with locating fixture and regular equipment including 8 Tool arms complete with cutting tools, 8 master cams, 1 master camshaft, 2 dogs, and steady rest shoes and arranged for motor drive, we to furnish motor you to mount same to machine.

Motor for operating above:

3 H P Westinghouse 1150 RPM motor, frame #20, type S K., 230 volts, direct current, without pulley, slide rails or starter.

Rebuilt by Willard Mch. Tool Co. on B12033. No charge.

Location—Bldg.	Date
Rouge Camshaft F-446,	5-16-23.
Location—Bldg.	Date
Rouge returning for repair,	8-24-23.
Location—Bldg.	Date
Returned to Rouge Plant,	12-23-23.
Location—Bldg.	Date
B 2 50 x 2 Rouge	1923.

Purchased from
Motch & Merryweather Mchry Co.
Manufactured by
Chas. Gordon Inc.,

F. O. B.	F'g't & C' t'g Weight
Cincinnati, O.	4300
Rec'd Order No.	Price
5-16-23 B-12620	$4335.00

Use
Turn Tractor Camshaft F-446
Rouge Plant.

1691

Ford Form 6710

Ford Motor Company

HIGHLAND PARK, MICH.

(2nd COPY)
PURCHASING DEPT.
PRODUCTION DEPT.
FOLLOW-UP

This Order Number must appear on all Packing Slips, Bills of Lading, Manifests, Packages and Invoices.

Date

Our Order No. B 12620

The FORD MOTOR COMPANY, of Highland Park, Michigan, first party, hereby agrees to purchase and receive, at its River Rouge Plant and

8-2-22

[illegible] Co
[illegible]
Detroit Mich

second party agrees to sell, DELIVERY REQUIRED

manufacture and deliver materials specified below, subject to the terms and conditions stipulated: 8-15-22

SHIP VIA [illegible]-4 Springfield - Mail
TERMS 60 days net
F. O. B. Cars Cincinnati Ohio

QUANTITY	DESCRIPTION OF MATERIAL	PRICE
1 only	Gordon Camcraft Turning Lathe; 8-1/4" swing; maximum distance between centers 36"; minimum distance between toolarms 1-5/8"; spindle speeds 80 to 125 varying according to form of cam; feeds .0046 to .000 per spindle revolution; to be arranged to turn our Tractor Camshaft F-446 as per B/P submitted; to come with locating fixture and regular equipment including 6 tool arms complete with cutting tools, 6 master cams, 1 master camshaft, 2 dogs, and steady rest shoes and arranged for motor drive, we to furnish motor and to mount same to machine. Our dim. sheet # L-1039-[illegible] attached	$ 4388.00
	Extra equipment:	
1 only	Complete set of Circular Tools	20.00
	Motor for operating above: One (1) 5 H.P. Westinghouse 1150 R.P.M. motor, frame #20, type S.C., 230 volts, AC, without pulley, Cline reliance starter. Confirming order Paint No. B-12620 in white on this machine All gears to be fully guarded Per quotation June 22nd 1922 (Motor order from [illegible] Mfg Co on PO B-23648)	
Mfg's No. 11869 Ck 64814 Sept 30 22 (A.K.)	Mark and consign: Ford Motor Co (for order B-12620) River Rouge Plant Detroit Mich	

Turn Tractor Camshaft F-446

INVOICE AND RECEIVING RECORD

Material in Transit	Invoice Date	Amount Invoiced	Date Received	Receiving Slip Number	Amount Received	Total Receipts
Rec'd R[illegible] 5-16/23				BT 20 [illegible]		

FOLLOW UP RECORD

Date	Remarks
	8/15
8/18	Carp Checking
8/21	T/y Acknd - Nov 10
10/13	Phone &
11/3	Phone and Ltr 2 Nov
11/3	Phone - Rec'd [illegible]
11/14	Phone - just rec'd Ltr 2 Nov
2/9	Ltr Nov 4 by Shop 2/25
3/17	Ltr Mar 14 to Shop
5/16	Phone - Look for this week
5/25	Phone - Ord 5/8
6/[illegible]	Our Order No. B 12620

DEFENDANT'S EXHIBIT NO. 56

[illegible]

3/12 Phone. Mel erected & running but rotating cam not functioning. OK Will Ship 3/17 &

3/23 Phone. Ready. Sent (2) shafts to be ground & returned for sample. When rec'd will ship in chs

3/30 3/30 Waiting for approved shafts

5/2 Checking

5/[illegible] Phone - Mr. Gordon here with camshaft is OK will ship 4/[illegible]

5/11 - Phone - shipt 5/5 trucked to Hamilton

1693

JUN 14 1920

61

5-12-20.

T410

FORD MOTOR COMPANY
DETROIT, MICHIGAN

1623

IN THE UNITED STATES DISTRICT COURT
EASTERN DISTRICT OF MICHIGAN
SOUTHERN DIVISION
The Gordon Form Lathe Company
PLAINTIFF
-VS-
Ford Motor Company
DEFENDANT
Defendant's Exhibit
IN EQUITY
4564

New Product: Cam shaft shaper.

1. Date work began: 1-12-14.

2. Name of person who suggested it: A. Oberhoffhen.

3. Name of person who authorized the work: C. H. Wills.

4. Names of persons conducting work on product: M16C Tool Room
Mechanical Design #1.

5. Where work was conducted: Ford Motor Co., Highland Park, Mich.

6. Drawing, or drawings, of the product itself in its various forms:
Attached.

7. Date work closed: 9-14-14.

8. Date product was put in use: Same.

9. Final disposition of the matter: Adopted and in use.

10. Written description of what the product embodies and its advantages:

This machine is used to shape up camshaft before hardening.

It consists of cutters marked A, cams and camshaft marked C, oscillating arm D, gear F and gear E. E is camshaft. The principle of operation is as follows:

Operator places camshaft in position and is clamped down by device marked G and H, operator sets machine going causing cutters to move from left to right. This is done by gear F which meshes with gear E which causes arm D to oscillate, said arm being attached to shaft connected to cutters, these cutters are attached to cam device C which allows them to move up and down with cam on camshaft, as camshaft turns slowly during the operation. This allows cutters to reach all parts of cams.

For further information see prints attached.

I certify the above information is correct to the best of my knowledge.

[signature]

Sworn to and signed before me this 27 day of May, 1920.

[signature]

Notary Public, Wayne County, Mich., My commission expires May 15, 1922.

DEFENDANT'S EXHIBIT 64

WALCOTT MACHINE COMPANY
Walcott Gear Tooth Grinder
Melling Contour Lathe
Jackson Duplex Die Sinker
Melling Cam Lathe
Jackson, Michigan
U.S.A.

Established 1881 Cable Address, "Walcott," Jackson

July 30, 1929.

The Ford Motor Company,
Dearborn, Michigan.

Attention of Mr. A. M. Wibel:

Gentlemen:

Referring to the balance of your April account, which is $5,926.62, which you have held up on account of the patent situation, wish to say that you have, no doubt, been informed of the plan for the purchase of Gordon and Redlin patent, which will eliminate any cost or damages to the Ford Motor Company.

We, therefore, think it more than fair that you should okay this balance and send us your check.

Hoping you will see this thing in this light, we remain

Very truly yours,

Walcott Machine Company,

D. G. Kimball,
President.

DKG:MH

1643

IN THE UNITED STATES DISTRICT COURT
EASTERN DISTRICT OF MICHIGAN
SOUTHERN DIVISION

The Gordon [illegible] Company, PLAINTIFF
Ford Motor [illegible], DEFENDANT
IN EQUITY 4564

Plaintiff's Exhibit 154a

2-8-16

D-34387

Arthur Colton Co.
Detroit, Mich.

F.O.B. Our plant or Our
Trap Car Ft. of 8th St.

2 Special machines for shaping 8 cams on Cam Shaft T-410 at one time, as per B/P 182-3 complete, excepting Details #365-366 & 367, sheet #92, also except motors.

Material at cost.
Labor at $1 per hr.

DJJ:GF
Oswald
#16738
2/8/16

1- Received 8-19-16
1- " 10-31-16
1- " 12-1-16

PLAINTIFF'S EXHIBIT NO. 154a

Form 464

Ford Motor Company

PERMANENT INVENTORY OF MACHINE TOOLS

MANUFACTURER'S NUMBER 105 FACTORY SERIAL NUMBER 32067

Relining regular cam turning lathe, with regular equipment and tooled to turn cams on F-446 Fordson camshaft; guaranteed production 30 camshafts per hour; headstock spindle to have hand operated chuck; hardened master camshaft to be supplied by us; arranged for chain motor drive, we to supply motor only, you to supply chain, sprockets and guard, and mount motor to machine.

For operating above:

5 HP, 1150 RPM General Electric Motor, Type RC, frame 27A, 230 volts DC, without pulley, slide rails or starter. (B-16577)

Outstanding order B 24802
7-10-24 $ 225.00

Motor	H. P.	Type	Frame	Voltage	Order
LOCATION					
Building	Date	Building	Date	Purchased from Walcott Lathe Co., Jackson, Mich.	
F-446-[illegible]	7-11-24			Manufactured by same	
				F. O. B. Jackson	Req. No. 16440
				Rec'd 7-9-24	Order No. B-13605
				Use Camshaft - Rouge	
				Turning cams on Fordson camshaft,	
				F-446.	

F.G.T.&C.T.G. WEIGHT 3550#

Price $ 4150.00

IN THE [illegible] DISTRICT COURT
EASTERN DISTRICT OF MICHIGAN
SOUTHERN DIVISION

The Gordon Turn Lathe Company, PLAINTIFF
-VS-
Ford Motor Company, DEFENDANT
IN EQUITY 4504

Plaintiff's Exhibit 1546
Defendant's Exhibit

PLAINTIFF'S EXHIBIT NO. 1546

9691

154C

Form 8326 6B—10-49

PRODUCTION AND MACHINE SPECIFICATION

Ford Motor Company

1-8.5-1000
1-8-1000

Date 1-16-51

NAME

PART NO. A-6250

No. req'd per car
Prod. req'd per hr.

Repairs per day
Schedule per day

Production in _____ hours

Opr. Name	Opr. No. 11	Name of Mach.	No.	No. per Hr.	No. of Mach. Req.
Rough Mill Cams		18-Z-1505 Milling Mach. With	603 26	75	.3

3-Z-12994--Water Pan

FIXTURES	TOOLS	GAUGES	REMARKS
Fixture part of Mach.	39-A-1051-1 R. H. Tool	24-A-17543 Snap	(1)24-A-17543 (1)24-A-21924
	39-A-1051-2 L. H. Tool	24-A-21924 Master	(20)39-A-1051-1 (60)39-A-1051-2
	38-A-1245-1 Collet		(1)38-A-1245-1
	38-Z-1245-2 Collet		(1)38-Z-1245-2 (1)18-Z-1505-15
	18-A-1505-15 Draw Car (R.H.)		(1)18-A-1505-161 (3)18-A-1505-46 (6)18-A-1505-45
	18-Z-1505-161 Draw Car (L.H.)		(1)19-A-41 (1)19-A-47-28
	18-Z-1505-46 Steady Roller		(1)19-A-45-44 (1)19-A-46-15
	18-A-1505-45 Steady Pin		(1)19-A-4513
	19-Z-41 Socket		(1)#5 Wrench
	19-Z-47-28 Socket Handle		
	19-A-45-44 1-5/64 Hx Socket		
	19-Z-46-15 2 Sq. Hd. Socket #5 7/8" O. Z. Wrench		
	19-A-45-13 7/8" Socket		

IN THE UNITED STATES DISTRICT COURT
EASTERN DISTRICT OF MICHIGAN
SOUTHERN DIVISION
The Gordon Form I athe Company PLAINTIFF
—VS—
Ford Motor Company DEFENDANT
Plaintiff's Exhibit 154C
IN EQUITY 4564

Part No. _____

Approved _____

PLAINTIFF'S EXHIBIT NO. 154C

FORD FORM [illegible] FORD MOTOR CO. **OPERATION SHEET** HOUSE PLANT DATE 3-6-25 154 d

FOR SHOP USE CUT OFF THIS COLUMN

NAME OF PART	PART NO.	NO. REQ.	MACH. ON HAND	SCHEDULE PER 16 HRS.	NAME OF OPERATION	OPER. NO.
CAM SHAFT	T-410	1		8677	TURN CAMS	OR 11

NAME OF MACHINE	S. T. NO.	PROD. PER HR.	FIXTURES	TOOLS	GAGES
16-Z-3 FORD CAM SHAPER	~~[illegible]~~	~~25~~		30-Z-361 CUTTER	24-Z-1365 .860"-.870"
	~~[illegible]~~	~~25~~			
	~~[illegible]~~	~~25~~			
	~~[illegible]~~	~~25~~	AVAILABLE	9-Z-32	
				9-Z-215	
WELLING CAM LATHES	~~34312 S~~	~~37½~~	1823	46-Z-536 SLIDE ATTACHM. FOR WELLING CAM LATHE	
	~~35289 S~~	~~37½~~	1823		
	~~[illegible]~~ S	37½			
	36592 S	37½			
	~~[illegible]~~ N	37½			
	~~[illegible]~~ N	37½		6-Z-6671 SPRING FOR WELLING	24-Z-10982 CHECK POSITION OF CAM
	~~[illegible]~~ N	37½			
	~~[illegible]~~ N	37½			
	~~[illegible]~~ N	37½			
	38080 N	37½		66-Z-12900 Chip Pans	
	~~[illegible]~~ N	37½			
	~~[illegible]~~ N	37½		38-Z-445 Head Stock	
	~~[illegible]~~ N	37½			
	~~[illegible]~~ N	37½			
	~~[illegible]~~ N	37½			
	~~[illegible]~~ N	37½			
	~~[illegible]~~ N	37½			
	36457				
TOTAL					

IN THE UNITED STATES DISTRICT COURT
EASTERN DISTRICT OF MICHIGAN
SOUTHERN DIVISION
The Gordon Form Lathe Company PLAINTIFF
—VS—
Ford Motor Company DEFENDANT
IN EQUITY 4564
Plaintiff's Exhibit 154 d

PLAINTIFF'S EXHIBIT NO. 154d

1700

COPY BOUND VERTICALLY

Office - Supreme Court, U. S.
FILED
APR 20 1943
CHARLES ELMORE CROPLEY
CLERK

IN THE

Supreme Court of the United States

OCTOBER TERM, 1942

No. 945-946 & 989

FORD MOTOR COMPANY,
Petitioner,

vs.

THE GORDON FORM LATHE COMPANY,
Respondent.

Transcript of Record

On Petition for Writ of Certiorari to the United States Circuit Court of Appeals for the Sixth Circuit

VOLUME V.

Proceedings in the United States Circuit Court of Appeals—Sixth Circuit.

I. Joseph Farley,
1664 National Bank Bldg.,
Detroit, Michigan,

Cooper, Kerr & Dunham,
Woolworth Bldg., 233 Broadway,
New York, New York,
Attorneys for Petitioner.

Lecher, Michael, Whyte & Spohn,
110 East Wisconsin Ave., Milwaukee, Wisconsin,

Richey & Watts,
Union Commerce Bldg., Cleveland, Ohio,

Swan, Frye & Hardesty,
Ford Bldg., Detroit, Michigan,
Attorneys for Respondent.

INDEX

PROCEEDINGS IN U. S. CIRCUIT COURT OF APPEALS, SIXTH CIRCUIT.

	PAGE
Entry—Causes Argued and Submitted	1
Decree—No. 9122	1
Decree—No. 9123	2
Opinion	2
Clerk's Certificate	26
Orders allowing certiorari	27

PROCEEDINGS IN THE

UNITED STATES CIRCUIT COURT OF APPEALS

FOR THE SIXTH CIRCUIT

CAUSES ARGUED AND SUBMITTED

(October 16, 1942—Before: HICKS, ALLEN and HAMILTON, JJ.)

These causes are argued by F. O. Richey and George D. Spohn for the Gordon Form Lathe Company, and by Drury Cooper, Sr. and I. Joseph Farley for the Ford Motor Company and are submitted to the Court.

DECREE—No. 9122

(Entered February 4, 1943)

Appeal from the District Court of the United States for the Eastern District of Michigan.

This cause came on to be heard on the transcript of the record from the District Court of the United States for the Eastern District of Michigan, and was argued by counsel.

ON CONSIDERATION WHEREOF, it is now here ordered and adjudged by this Court that the judgment of the said District Court in this cause be and the same is hereby modified by increasing the award to the plaintiff in the sum of $120,625.89 savings in overhead allowed by the Master to The Gordon Company and disallowed by the court and, as thus modified, is hereby affirmed.

DECREE—No. 9123

(Entered February 4, 1943)

Appeal from the District Court of the United States for the Eastern District of Michigan.

This cause came on to be heard on the transcript of the record from the District Court of the United States for the Eastern District of Michigan, and was argued by counsel.

On Consideration Whereof, it is now here ordered and adjudged by this Court that the judgment of the said District Court in this cause be and the same is hereby affirmed.

OPINION

(Filed February 4, 1943)

Before Hicks, Allen and Hamilton, Circuit Judges.

Hamilton, Circuit Judge. These are appeals from the court's rulings on exceptions to a Special Master's report in a patent accounting case.

The Master recommended that appellant in No. 9122, The Gordon Form Lathe Company, was entitled to its choice of $206,824.22 alleged profits realized by the appellee, Ford Motor Company, or damages of $120,000.00 because appellee infringed appellant's patent No. 1,542,803.

Both parties excepted to the Master's report and on final hearing the court disallowed $120,625.89 alleged savings in overhead which the Master found appellee had realized by reason of its infringement. The court sustained the Master in all other particulars. The parties will hereinafter be referred to as The Gordon Company which was plaintiff below and the Ford Company which was defendant below.

The history of the litigation invoked by the present patent is helpful to a correct decision of the issues.

The inventors, Charles Gordon and Alfred W. Redlin, filed their application for the patent on June 19, 1920, which was granted June 16, 1925. It first appears in litigation in the case of *Melling* v. *Gordon*, 4 F. (2d) 945 (C. C. A. D. C.), decided April 6, 1925, which was an action to review the decision of the Commissioner of Patents awarding priority of invention to Gordon and Redlin over the application of Herman W. Melling.

The embodiment of the invention was a lathe for turning irregular forms, specifically the camshafts of automobile engines. The core of the invention was the oscillation or tilting of the tool under the control of a master cam to maintain at all times a proper cutting angle between the upper surface of the cutting tool and the surface of the work cam. According to the opinion of the court, the patentees had manufactured and sold a number of machines in accordance with the disclosures of their application and drawings, but they did not operate satisfactorily from a commercial standpoint because from 10 to 20 percent of the camshafts turned out on them were commercially unusable and there was an excessive waste or scrap in their manufacture.

Melling's case, as the court decided it, was an attempt by him to secure an award of priority on the alleged superiority of his invention over that of Gordon and Redlin, because his machine was able to manufacture shafts with less waste than theirs and had a wider range of utility. The court said: "Neither wider range of utility nor better work are sufficient to deprive Gordon and Redlin of their right to the claims in issue."

The next litigation is found in *Melling* v. *Gordon Form Lathe Company*, 14 F. (2d) 437 (D. C. Ohio). In that case Melling instituted proceedings under the Revised Statutes, Section 4915, to compel issuance to him of a patent for an invention embodied in the patent issued to Gordon and Redlin, on the ground that the Gordon and Redlin device as described in the specifications and illustrated in the drawings was inoperative or lacked patentable novelty. The court there decided that patentable novelty was not lacking when the counts in issue

were construed broadly. The next litigation is found in *Gordon Form Lathe Company* v. *Walcott Machine Company*, 20 F. (2d) 673 (D. C. Mich.). This was a suit brought for the alleged infringement of the present patent. The court found that the patent was valid, but that the device of Walcott did not infringe. In deciding this issue, the court said: "Prior to the Gordon and Redlin invention, irregular shaped cams of automobile shafts were ground. This was an expensive and dangerous process."

On appeal this court reversed the District Court in part [32 F. (2d) 55 (C. C. A. 6)] and held that the Walcott machine infringed the present patent. In the course of the decision, Judge Hickenlooper, writing for the court, said:

> "The present patent is in a very true sense generic, and the patentee a pioneer in this particular branch of the art. The machine had commercial utility and was accepted by the trade, and its manufacture was reasonably successful until thrown into competition with the infringing machine, which avoided the chief defect, heretofore mentioned, and did not have some of the limitations of the patented device."

After this court's decision, The Gordon Company entered into a compromise settlement with the Walcott Company which had become financially involved. By the terms of the settlement, The Gordon Company accepted $1.00 for all claims of infringement and waived an accounting. In an amended final decree the Walcott Company was ordered to pay The Gordon Company $4,000.00 costs.

In August, 1922, The Gordon Company sold to the Ford Company one of its patented machines, which was delivered May 16, 1923. The Ford Company was unable to operate the machine successfully and after a fair trial it was returned to The Gordon Company. The machine was rebuilt and four months later was returned to the

Ford Company which again put it in operation but without success.

In the early part of 1924, the Ford Company purchased a battery of eighteen Walcott machines which it used in the manufacture of all its camshafts and in 1929 it purchased six others, the twenty-four machines being used until 1931, when they were replaced by milling machines designed by the Ford Company's engineer Pioch.

On June 12, 1929, The Gordon Company sent notice of infringement to the Ford Company. At that time the Ford Company owed the Walcott Company $5,926.62 balance on the purchase of machines. The contract between the Ford Company and the Walcott Company contained a patent guarantee clause. The Ford Company notified the Walcott Company of its receipt of the notice of infringement and called on the Walcott Company to defend any action against it or to pay any claim it owed by reason of infringement of the present patent, at the same time withholding the payment of the sum due the Walcott Company. The Walcott Company informed the Ford Company that it was conducting negotiations for the purchase of the Gordon-Redlin patent and when completed, all costs or damages by reason of Ford's alleged infringement would be settled.

The Gordon Company instituted this action on Nov. 29, 1930, charging the Ford Company with infringing claims 1, 2, 12, 23, 24, 28, 29, 30, 33, 34 and 38 to and including 42 of the present patent.

On the original trial, the lower court found that the Ford Company had infringed the patent by the use of the Walcott-Melling machines and also the Pioch milling machine. On appeal [*Ford Motor Company* v. *Gordon Form Lathe Company*, 87 F. (2d) 390 (C. C. A. 6)] this court modified the decree of the District Court and decided that the Walcott-Melling machine infringed all of the claims relied on except 12, 23, 24 and 38, but that the Pioch machine infringed none of them. In the opinion prepared for the court by Judge Raymond, it was said:

"Because of the sharper points of the cams as they had for many years been used in defendant's engine, plaintiff was unable with its machine, after efforts extending over many months, to accomplish more than a very moderate degree of success. Due to the necessary rapid change of position of the tool relative to the work piece as the tool passed from the lower to the upper side of the pointed end of the cam, a cut or gouge was frequently left on the lower side of the completed cam and an excess of material upon the upper side which resulted in a very considerable percentage of rejection, rendering it of dubious practical value in defendant's plant. Because of this inefficiency the Gordon machine was rejected by defendant after a long period of experimentation and the Walcott machine was substituted."

On remand, the cause was referred to a Special Master who has brought before the court a very able and complete report on the claims of the parties and a thorough discussion of the facts and the applicable law. The Master and the lower court correctly applied the rule that where the unlawful use of the patented article or process constituted infringement, the advantage, namely the savings which the infringer derived from using the invention of the patentee or his assignee over what he could derive with any other process or thing which was known prior to the invention constituted the profit which the Gordon Company was entitled to recover. *Horvath* v. *McCord Radiator & Mfg. Co., et al.*, 100 F. (2d) 326 (C. C. A. 6).

The principal issue between the parties does not relate to the correctness of the rule, but to its application, and each of the parties insists that the Master and the court failed to apply the correct standard of comparison in the light of the evidence.

The matter of shaping the cams in the Ford camshaft is of importance. The tolerance of the cams determines the degree the valves are raised or lowered in the combustion operation of the engine on which the efficacy of the motor depends.

Opinion

Prior to the time the Ford Company installed the Gordon machine, and subsequently the Walcott machines, it made camshafts by the use of a shaper, which will be described hereinafter. The shaper used to machine camshafts on the Ford Model T cars was mechanically unsuitable to rough machine those on the Model A Ford and the Fordson tractor. The Ford Company substituted the infringing devices for the shaper in machining camshafts for these two models.

Excluding the Ford shaper, prior to the Gordon patent, the art of machining a camshaft was to forge a steel shaft of the same general shape as the finished shaft, but with as much as one-fourth inch of excess metal upon it, and to reduce it to finished form by approximately fifty different operations. In the sequence of operations the shaft is centered, the concentric bearings and the parts between the cams are turned and the surplus metal is removed from the cam in two steps, a rough machining operation which removes most of the metal and a finish grinding of the shaft. The grinding was done with a single wheel surfaced with emery or carborundum rotated and oscillated to and from the material being ground, which wheel was mounted on a rocker fixture and operated on the general principle of the old grinding stone. Grinding wheels as tools are expensive because of rapid deterioration. Between these two operations the shaft is case-hardened to make its surface wear-resistant. After other operations to finish the flanges and bearings and to put on the necessary screw threads and dowel holes, the shaft is polished by grinding. The removal of excess metal from the cams always had been difficult because of their irregular shape and until Gordon's discovery, it was not considered feasible to use a lathe such as was used on the cylindrical parts of the shaft because of the poor cutting angle of the tool traveling around the nose of the cam and the sharp clearance angle required. Gordon obviated these difficulties by tilting the cutting tools of the appliance.

The parties agree that the Ford shaper is the correct standard of comparison in determining savings, if any, by the Ford Company in the manufacture of camshafts

for Model T cars. The wide difference between the parties relates to the standards of comparison to be used in machining the Model A and tractor camshafts.

The Gordon Company insists that during the infringing period the use of the Landis grinder was the only process open to the public and adequate to enable the Ford Company to obtain an equally beneficial result over the Gordon and Revlin invention in the shaping of camshafts.

The Ford Company put into the record the description of four machines, all superior to the grinder, but here insists on the Melling patent No. 1,634,550 and the redesigned shaper in the alternative as the standard of comparison.

The Master adopted the grinder tendered by The Gordon Company as the standard of comparison for the Fordson tractor camshafts. He rejected the Melling machine, patent No. 1,634,550, on the ground it infringed the Gordon patent.

By the use of The Gordon Company's standard of comparison and attributing all the savings in the cost of manufacture of camshafts to Gordon's device, The Gordon Company contends the Ford Company realized a profit of $950,000.00 by reason of its infringement. On the other hand, using the most favorable standard of comparison tendered by the Ford Company and allocating the savings in cost between infringing and non-infringing devices, the Ford Company contends that its cost of manufacturing camshafts was increased $96,000.00 by reason of using the infringing device.

The Master found that the machine embodied in Gordon's invention was not wholly successful in machining the Ford camshafts and in the former opinion of this court [97 F. (2d) 390, 391] it was stated that because of the sharper points of the cams, the Ford Company was unable, after efforts extending over many months, to accomplish any more than a moderate degree of success by the use of the Gordon machine.

The Ford Company in the course of the accounting proceedings put in evidence Melling-Walcott patents Nos.

1,512,995 and 1,655,655, both relating to patentable features included in the infringing Walcott machine, and which the patent office ruled were patentable over Gordon. Patent No. 1,512,995 was issued to Melling on October 28, 1924, on an application filed February 27, 1923, and patent No. 1,655,655 was issued to him on January 10, 1928, on an application filed October 13, 1920.

These patents are not to be confused with Melling No. 1,634,550 issued July 5, 1927, which the Ford Company put in evidence as an available standard of comparison. The first patent No. 1,655,655 was the application of the Blanchard principle, old to the art, to cam cutting machines as a patentable improvement over Gordon. According to the evidence in the record, there was a marked difference between the two machines in the actual cutting of the cam. The last patent, No. 1,512,995, related to a change in the method of tilting the tool in the Gordon machine. Referring to this patent the court said in *Gordon* v. *Walcott*, 32 F. (2d) 55, 61, it was "doubtless . . . a valuable improvement which perhaps was patentable as such."

From these facts, the Ford Company urges on us that each patent owner is entitled only to the profits the infringer has made from the use of his invention and, as it appears from the previous decisions of the courts construing Gordon's patent and also from the findings of the Master in the instant case, that the patented Gordon machine was not usable commercially by the Ford Company and it having been shown by uncontradicted evidence that the invention as disclosed and claimed was usable only with additional Melling patented improvements, The Gordon Company could not legally recover all the alleged profits and the burden rested on it to prove the amount of profits attributable to the infringement. Since The Gordon Company offered no evidence tending to allocate the profits to the different parts of the mechanism involved, the Ford Company insists that nominal damages only should be awarded. The contention of the Ford Company, if correct, as fatal to The Gordon Company's claim and

we dispose of this point before going to other phases of the case.

The present patent as heretofore found by this court is generic. [32 F. (2d) 55, 58.] Gordon and Redlin taught and gave to the industry a new method for shaping camshafts, which contributed substantially to the mass production of automobile engines. It is true that the Gordon-Redlin machine as originally described in their patent drawings and specifications had only a moderate degree of success in shaping camshafts for the Model A cars, because of the sharper points of the cams used in that model and it is equally true that Melling, a mechanic of considerable ingenuity and experience, acting on the Blanchard principle [32 F. (2d) 55, 59] improved the Gordon machine so as to make it operate with complete success.

There is such a thing as second-hand improvements. Some inventors, musing on the accomplishments of others, have unconsciously adopted their inventions as their own. Under these circumstances, the new conception is like the original but for which it never would have existed; still, it is sometimes sufficiently different from the original to to be a new thing, not a reproduction of the old and it is a creation though so to say a suggested creation.

Melling was working to improve Gordon's machine and was successful, but his accomplishment was not a creation and was not sufficiently different from Gordon's to say that the fruit of Melling's mechanical tree was the only fruit that the Ford Company gathered. Melling's improvements were not grafts on Gordon's patent tree, but only a limb upon it.

The finding of the Master that the Ford Company enjoyed a savings from its infringement of the Gordon patent is supported by the overwhelming weight of the evidence. The Ford Company does not dispute the fact that it attained substantial savings in cost through the use of the Gordon machine with the Melling improvements upon it.

Equity will not allow one who infringes a patent to escape liability therefor by making improvements upon the device and by so combining the original with the

additional improvements that each is an indispensable element in the result. The Supreme Court held in *Dowagiac Manufacturing Company* v. *Minnesota Moline Plow Company,* 235 U. S. 641, 646, that profits attributable to patented improvements belong to the owner of the patent, but insofar as they spring from other parts or features, they belong to the infringer and if the profits necessarily are commingled they are to be separated between the patent and the exclusion features. The court further held that the burden rested on the owner of the patent to take the initiative in presenting evidence looking toward apportionment.

In *Westinghouse* v. *Wagner Electric Mfg. Company,* 225 U. S. 604, 620, further consideration was given to the burden resting on the parties in apportioning profits between infringing and non-infringing devices. The court there said:

> "But when a case of confusion does appear—when it is impossible to make a mathematical or approximate apportionment—then from the very necessity of the case one party or the other must secure the entire fund. It must be kept by the infringer, or it must be awarded, by law, to the patentee. On established principles of equity, and on the plainest principles of justice, the guilty trustee cannot take advantage of his own wrong. The fact that he may lose something of his own is a misfortune which he has brought upon himself; and if, as argued, the fund may have been made by the use of other patents also, for which he may be liable in another case, it is again a misfortune which he has brought upon himself and an instance of a double wrong causing double liability. He cannot appeal to a court of conscience to cast the loss upon an innocent patentee and by judicial decree repeal the provision of Rev. Stat. § 4921, which declares that in case of infringement the complainant shall be entitled to recover the profits to be accounted for by the defendant."

In the case at bar, The Gordon Company proved that the Ford Company made profits by decreasing its manufacturing costs by using the patented machine and having shown this fact, the burden returned to the Ford Company to show that a portion of these profits was due to to the use of a part of the machine not covered by the Gordon-Redlin device. This burden it met. To this point, the respective parties have carried the burden resting on each of them, but The Gordon Company having shown the commingling of profits by the Ford Company, and it appearing that the latter company failed to keep records or to supply evidence that would disclose what proportion of the profits arose from the infringing devices and what proportion, if any, from Melling's improvements, the burden again returned to the Ford Company which it has failed to carry and such failure creates an unavoidable liability. *Horvath* v. *McCord*, supra.

Leaving the matter of apportionment between the Gordon patent and the Melling improvements, we now turn to the practical legal requirements which underlie the determination of profits growing out of the advantage to the Ford Company of using the Gordon machine over other known modes of shaping camshafts during the period of infringement. In proceedings such as these there can be no mathematical certainty, nor anything approaching it, but we should reach the degree of likelihood on which reasonable men are content to act in the every day concerns of business life.

In selecting standards of comparison, the owner of the patent must bear the burden of establishing some acceptable standard by which to determine whether there were in fact any profits at all, for obviously the patentee is entitled to recover only profits measured by gains or savings which are attributable to the use of his invention in comparison with other available means. *Mowry* v. *Whitney*, 81 U. S. 621, 651. The Gordon Company urges that, as the Master found the grinder was an available method of machining the Model A camshafts during the infringing period, it has thus fully carried the burden of selecting a standard of comparison. To this we agree.

In determining what is a proper standard of comparison in a particular case, it is unnecessary for the owner of the patent to prove affirmatively that at the time of the infringement, a particular process or thing was better than any other except his invention. This requirement would be unreasonable because impossible of performance. It would entail evidence to prove a negative, i. e., the existence of a better process or thing than the one fixed upon and likely it would be impossible to prove that nothing better existed anywhere. The usual procedure is for the plaintiff to select an acceptable standard of comparison and to offer evidence to prove the advantage derived by the defendant from the use of plaintiff's invention over what he could have derived from the standard selected.

Under the facts of this case, the burden shifted to the Ford Company to prove the availability to it of a machine or process superior to that of the grinder tendered by The Gordon Company. To meet this burden, the Ford Company offered in evidence as the best standard of comparison the patent to Melling No. 1,634,550, issued July 5, 1927, on an application dated July 19, 1920. The Model A camshafts were placed in production in November, 1927.

Melling's patent was a modification of the device this court held infringed the Gordon patent and differed from the infringing device in that the tool was fixed in a vertical bar which was attached at the end to two parallel arms, one of which contacted the master cam overhead causing the entire tool to move up and down in a parallel position instead of pivoting upon an axis. A constant angle between tool and work was not obtained with the parallel type head but the variation was not great enough to cause inefficient cutting. Many machines embodying the Melling patent No. 1,512,995 were manufactured and sold by the Walcott Company to avoid the effect of the decree of infringement of this court against it. The cutting tool in them was not mounted exactly as defined in Gordon's claims and did not tilt or pivot upon an axis but instead moved in and out and was controlled by a cam. The machine was adaptable to shape cam-

shafts on Model A and Fordson tractors and was superior to the machines in use at the time Gordon obtained his patent.

The Master rejected the Melling patent as a standard of comparison on the ground that it infringed the Gordon patent. His conclusion was supported by the testimony of the Ford Company's chief tool designer, Pioch, who stated that after inspecting the Melling machine in operation, in his opinion its modified heads did not differ sufficiently from the tilting type tool of the Gordon machine to avoid infringement. The trial court approved the Master's finding in this respect.

The Ford Company at no time used this device although it was available to it after this court decided that the original Walcott machine infringed Gordon. It is shown by the evidence that the responsible officers of the Ford Company avoided its use because of probable infringement.

As we have heretofore pointed out, the heart of the Gordon invention was the oscillating or tilting of the cutting tool under the control of a master cam. Gordon's claims, which have been sustained in previous decisions of our court, variously describe means for "varying the angular relation of the tool to the work" "swinging" the tool and tilting it.

The cutting tool described by Melling does not tilt or swing on a pivot but its movement is under the control of a cam which is adapted to impart an alternating or variable motion to the cutting tool by sliding or rolling contact with the shaping metal. For all practical purposes, it produced the Gordon result.

Gordon's invention was generic and in his patent application he described what he conceived to be its best form. He also anticipated it could be used in other forms and proportions. In view of the scope of his claims and the basic character of his invention, the law secures him against imitation by other forms and proportions. We cannot say the findings of the Master supported by the trial judge were clearly erroneous. Federal Rules of Civil Procedure, Rule 53e(2), U. S. C. A. Title 28, fol-

lowing Section 723(c); *Adamson* v. *Gilliland,* 242 U. S. 350, 353; *Coupe* v. *Royer,* 155 U. S. 565, 579.

The Pioch shaper designed and used by the Ford Company to machine camshafts for Model T cars employed a group of ordinary shaper tools, the shaft being fed past them in order that each tool would remove a shaving of metal off the face of the cam parallel to the axis of the shaft. The shaft rotated so that fresh uncut metal contacted the tools for each of their cutting strokes. During this operation, the tools were mechanically adjusted to move toward and away from the axis of the shaft so as to follow the contour of the cam. Simply stated, it was a shaping operation crosswise of the peripheries of the cams as distinguished from a removal of the metal circumferentially thereof by rotation of the work against the cutters. Each tool performed its cutting stroke while the bed was traveling in one direction and on the return stroke each tool was raised slightly from the work to prevent its point being dragged backwardly across the work. On the return strokes the shaft was automatically rotated slightly to cause the tool to remove or cut off a small chip or slice of metal on its next cutting stroke.

The machine which the Master adopted as a standard of comparison differs from the original shaper principally in the mounting of the cutting tools, each of which is located to cut in the opposite direction of the parallel tool. Additional changes made the two strokes of the ram of equal duration and each cutting tool was relieved individually on the non-cutting stroke. Under the old shaper they were relieved simultaneously. This modified shaper was an adaptation of an original created by a Ford engineer whose work was a graft on the old shaper. He designed it in 1919 for use on tractor cams. No machine was built or put in operation from either of these designs.

The Gordon Company urges the rejection of the Master's selection on the ground that the elaborate mechanism requiring simultaneous cooperation between the respective parts of the machine is meagerly and sketchily outlined and that even in the dimness of its description it may be discerned that the mode of operation of the

machine involves the timing of the increase and decrease of the length of each tool holder in synchronism with the back and forth movement of the shaft and the movements of the companion tools, which operation was a stranger to the original shaper. It also insists that the description of the operation of the machine points out that half of the cams are machined in one direction and the other half in another which was also not done in the original shaper. It urges that the similarity between the modes of operation of the original and the redesigned shaper is found only in that the cutting tools in each machine cut off the surface of the cam in a horizontal movement of the camshaft.

The Gordon Company also insists there is no evidence in the record showing that the redesigned shaper was usable for making camshafts for the Model A cars or the Fordson tractor and it further insists that an examination of the model and drawings of the proposed redesigned shaper shows that it was impracticable for shaping camshafts. We cannot agree to these contentions.

The Ford Company introduced in evidence drawings of the redesigned shaper and a model of it. Four experienced mechanics and tool designers, three of whom were employees of the Ford Company and the other a former employee, testified in substance from the drawings and the model that the redesigned machine contemplated only the rotation of the four tools in order that they would perform their cutting strokes on the return stroke of the table, which they stated was a simple mechanical expedient to change the raising and lowering of the four tools in accordance with that portion of the table stroke with which they were to cut. They testified that each tool performed its cutting operation precisely as in the earlier shaper, each cutting as the result of the reciprocation of the cam beneath its cutting edge and that they produced the required non-geometric form or contour under the control of the specially designed cam operated in synchronism and by the same detailed mechanism as in the original machine, with the interposition of a common wedge.' The Gordon Company introduced no evidence on

the lack of utility of the redesigned shaper, but relied on the testimony of Ruby E. Herklotz, a former die and tool maker and at the time of the trial assistant purchasing engineer in the engineering purchasing department of the Ford Company, who had testified in the infringement case that the Ford cam shaper was not usable on the Model A or tractor shafts.

On the evidence, the Master found, which finding was concurred in by the trial court, that the redesigned shaper was workable and could be efficiently used for the making of Model A camshafts. The utility of the appliance was a question of fact and as the Master's conclusion was supported by substantial evidence it should be accepted. Federal Rules of Civil Procedure, 53e(2), 28 U. S. C. A. following Section 723c.

The legal question presented is whether a paper aggregation assembled after infringement and not reduced to practice can be dated back and used as a standard of comparison affecting the earlier supposed valuation. The processes developed by manufacturers create a constant demand for new machines which the skill of ordinary mechanics and engineers is generally adequate to devise. Many new machines come into use as a natural and proper outgrowth of the applied skill of mechanics and engineers. Shapers are old in the machine tool art and they have been used for not only light, but heavy, cutting. They are subject to the disadvantage in use that no work is performed on the return stroke of the cutting tool and difficulties are encountered in their use for contoured shaping.

The Ford Company overcame the difficulty in using them for contour shaping in making camshafts for the Model T car and from the evidence in the record, it is fairly proven that the skilled mechanic and engineer could so make them function by the same process and method on Model A shafts.

There are various judicial pronouncements on what is an acceptable standard for comparison on profits. In *Mowry* v. *Whitney*, supra (81 U. S. 620, 651), in referring to the period of infringement, the court said it must be a device "then open to the public." In *Sessions* v. *Ro-*

madka, 145 U. S. 29, 45, the court said it must be a device "known and in general use anterior to the date of the patent." In *Black* v. *Thorne*, 111 U. S. 122, 124, the court said the device must be in "common use and produce the same result." None of the reported cases, so far as we have been able to discover, are determinative of the precise question here presented.

In ascertaining the profits arising from the use of a patented machine by comparison with machines competing with the patentee's conception, we are dealing with practical business matters and our result should not be an unreasonable one which leads to hardship, injustice or absurdity. The standard of comparison set up by an infringer need not to have been used by him at any time and in such cases the evidence of the utility of the device as compared with the invention in suit, may be drawn from persons who have used the two under similar conditions, or from any other source, which is capable of furnishing convincing proof on the point. *Tilghman* v. *Proctor*, supra (Op. page 152), The proposition is akin to the doctrine of novelty being negatived in infringement cases by prior paper patents or printed publications. In determining standards of comparison for the purpose of ascertaining profits, if the concept of the proposed standard of comparison is full enough and precise enough to enable any person skilled in the art to which it relates to make the thing set up as a standard of comparison, it is sufficient. As applied to the facts of this case, we are of the opinion that the Ford Company was entitled to use as a standard of comparison any aggregation open to the public during the infringing period, even though it required the carrying forward of an original conception, where the change was only in form, proportion or degree, and where the new aggregation performed the original function in substantially the same way as the old, and this is true regardless of whether the specific device was put in actual use. In other words, Ford's field for selection embraces all that was a part of the art at the time it appropriated Gordon's invention whether reduced to actual practice or

not. *National Tube Company* v. *Mark*, 10 F. (2d) 430 (C. C. A. 6).

The Master's selection of the shaper as a standard of comparison for the Model A car was not inappropriate.

The Ford Company urges on us that the Master erred in adopting a different standard of comparison for the Fordson tractor, and that he should have used the same standard as was applied for the Model A camshafts.

The Master used the Landis grinder as the standard of comparison for the Model F tractor camshafts, which resulted in awarding to the Gordon Company $65,448.31 alleged saving realized by the Ford Company in the use of the Melling-Walcott machines in the years 1925 to and including 1928. The Ford Company commenced the production of tractors in 1919 and until 1924 at which time it adopted the Melling-Walcott machines, it used the Landis grinder for shaping camshafts on this model. The Master concluded that because tractor production by the Ford Company was small compared to its production of Model A cars and that the manufacture of tractors was a venturesome and expensive undertaking, the Ford Company would not have used the shaper although one could have been built and used.

It appears from the evidence that the designing and construction of new machine tools by skilled mechanics and engineers is tedious and costly and that special design machines are junked when the object of their creation is attained.

The Master's findings on this branch of the case are in the nature of inferences and deductions and are not so weighty as his findings on the utility of the shaper for Model A camshafts. Upon a full consideration of the whole matter, we have concluded there is enough evidence in the record to make applicable the rule that the presumption is in favor of the correctness of the Master's report on the facts.

The predicate of the standard of comparison is that the trespasser would have used the comparative device, but for his infringement and the undisputed evidence shows that the Ford Company used the Landis grinder

for making tractor camshafts until it commenced the use of the Melling-Walcott machines, although at the same time it was using the shaper in making camshafts for Model T cars. The fact that it was using the Landis grinder at the beginning of the period of infringement lends substantial support to the Master's conclusion that the grinder was the appropriate standard of comparison.

The Ford Company in its accounts claimed $65,263.46 direct labor cost of straightening camshafts thrown out of alignment in the course of shaping which cost it claims was an increased cost incurred by the use of the Melling-Walcott machines over the shaper. The Master disallowed this item of expense. The Ford Company urges on us that in this particular instance, the Master violated the well-established rule that in determining profits by comparative standards, the infringer is entitled to deduct the increased expense, if any, of using the new process over the old, ascertained by the manner in which the infringer ordinarily conducts his business. (*Tilghman* v. *Proctor*, supra, Op. p. 151.)

The Master found that the Ford Company used an additional straightening operation on the shafts after it began using the infringing Melling-Walcott machines, and that the labor cost thereof was the amount claimed by the Ford Company in its accounts but he found that the additional operation was not attributable to the difference between the use of the infringing machines and the shaper. The witnesses for the Ford Company testified that the infringing machines could have been made to operate precisely as the shapers with the installation of steady rests, which would have eliminated the additional straightening operation. The item here claimed, if allowed, would largely make up the loss which the Ford Company insists it sustained by the use of the infringing devices instead of the shaper, and it is a fair presumption if its contentions are sound, it would have preferred to use the shaper rather than the infringing device.

Every reasonable presumption is in favor of the Master's report as to profits made by an infringer based

on oral testimony and his report is not to be set aside unless error clearly appears. We find no such error.

The Ford Company complains that the Special Master without evidence to support his findings, reduced by eighteen percent, the output of shafts per hour in the use of the Ford cam shaper for machining Model A camshafts under the actual production of the Model T camshafts.

The Master was compelled under the circumstances of the case to deal in presumptions. The comparative modified shaper for machining Model A camshafts had not been put in actual operation. The burden rested on the Ford Company to establish by clear and convincing evidence the fact that the modified shaper would produce the same output of Model A shafts per hour as the one used for shaping Model T shafts. We have critically examined the evidence on this subject and conclude that the Ford Company did not carry the burden resting on it.

The Ford Company also complains that the Master erred in finding that the figure of 37.5 shafts per machine hour or 75 per man hour was the life of a grinding wheel used in making the tractor camshafts. The evidence on this subject was conflicting, a part of which supports the Master's findings. The error assigned is unavailing.

The Master found that the Ford Company reduced overhead charges $120,625.89 by use of the Melling-Walcott machines in camming shafts. The Master ascertained this sum by reducing the overhead expense as shown by the records of the Ford Company in the same proportion that direct labor cost and time were reduced by the use of the infringing machines.

The court sustained the Ford Company's exceptions to the Master's finding in this particular on the ground that there was no evidence to support such finding. The Gordon Company urges that the Master should be sustained. We have to decide whether there is any necessary corollation between labor costs, time and overhead. Under the Ford Company's regular system of accounting, it divided cost of production into two classes: (1) administrative and selling expense, (2) manufacturing expense.

The former is not material to the question we have here.

The purpose of the cost accounting system of the Ford Company was to determine the selling price of its automobiles or tractors and also their component parts and to fix inventory value for income tax purposes. Its accounting method was not used to reflect actual cost of production. The camshafts for the Ford cars passed through several of the Ford Company's manufacturing departments before being finished. Once every two or three months during the accounting period, manufacturing cost of each component part of the automobiles and tractors was determined and entered on cost summary cards classified separately (1) material, (2) direct labor and (3) overhead. In applying this system to the manufacture of camshafts, material represents the cost of the raw product, direct labor represents the wages paid to the operators of the machines. The latter is determined by dividing the total time of all direct labor in the department for the month in question by the number of shafts produced and multiplying the result by the average departmental wage to express the labor cost per unit in dollars and cents. Overhead was classified into thirty-one items[1] some of which, such as depreciation, were charged directly to the Department where the production machine was located. Other items falling into more than one department were computed on the whole factory and then apportioned among the different departments, the rule of apportionment being based as to some items on the building area, direct labor, etc. The

[1] Administrative salaries; depreciation and land improvements; depreciation of buildings; depreciation of machinery; depreciation of durable tools; depreciation of factory and miscellaneous equipment; depreciation of freight car equipment; depreciation of locomotive equipment; depreciation of power equipment; insurance; experimental engineering and designing; moving and re-arranging department; factory supervision; final inspection; miscellaneous manufacturing expense; power operations; repairs to land improvements; repairs to buildings, fixtures and structures; repairs to machinery; repairs to durable tools; repairs to factory and miscellaneous equipment; repairs to freight car equipment; repairs to locomotive equipment; repairs to power equipment; expense of tools; insurance (employees' liability and compensation); sweeping and cleaning; taxes (state, city and county); miscellaneous services for employees; timekeeping, pay rolls and factory clerical salaries."

total overhead expense in the department was divided by the total direct labor expense resulting in departmental percentage rates of burden to direct labor which was used in turn in computing overhead cost per unit.

The Master found the shaft production per hour per man on the Melling-Walcott machines and similar production on the comparative machines and using the increased production on the infringing machines as the base and applying the formula used by the Ford Company in its regular accounting practice as above outlined, he determined the Ford Company realized a savings in overhead which was in direct proportion to the increased production per man hour by use of the infringing machines.

The Ford Company insists that three items only, namely, depreciation of machinery, repairs to machinery and expense of tools, could have been affected by the use of the infringing machines and that as in its statement of account which it was ordered to file, it gave full consideration to these items and there was no evidence refuting its statement in this particular, the Master was required to accept it.

The question resolves itself as to whether the percentage of direct labor cost method combined with time may be applied under the circumstances of this case in determining the savings of the Ford Company by the use of the infringing devices.

The findings of the Master that the production of cam roughing operations for the Model T camshaft was increased by the use of the Melling-Walcott lathes over the Ford shapers from fifty to seventy-five shafts per hour per man, on the Model A camshaft from thirty-six to sixty, and on the tractor camshafts from eight to forty are supported by substantial evidence. His finding that departmental overhead expense was not increased by the use of the infringing machines is likewise supported by the evidence. The inescapable inference from the facts is that the Ford Company was able with the same overhead organization and with reduced capital expenditure to increase substantially the production of

camshafts per hour by the use of the infringing machines. It is a matter of common knowledge that all well-managed manufacturing businesses recognize overhead costs as financial outlays expended in the production of an article or process. It is certain that the Ford Company gained an advantage in overhead by the use of the infringing machines and that under settled rules of law the Gordon Company is entitled to this savings or advantage measured in money.

There is probably no single phase of determining cost of manufacturing a device or machine which is more elusive or difficult than the allocation of overhead to a particular article. The impossibility of precise allocation is generally recognized and the law is not so exacting as to require a delicately balanced scientific method of determination, which reaches a mathematical certainty.

Inasmuch as overhead is impossible of direct application, manufacturers have devised and used methods for its allocation which have proven by experience to be remarkably accurate. By the use of these methods industrial executives are enabled to distinguish profitable units of production from those without profit, to eliminate wasteful methods, to measure deviations from standard performance, to calculate the best method of material handling and to establish selling prices upon the sound basis of cost of production. In arriving at a just conclusion on the matter we are considering, we know of no better rule to aid us than the one applied by manufacturers in the daily conduct of their business.

The cost of manufactured products consists of the sum of direct costs, that is, direct material and direct labor, plus indirect costs, or manufacturing expense. Because of its indirect and general nature, manufacturing expense cannot be charged directly to each production order as can direct material and direct labor. It must therefore be distributed over production in such manner that each kind of product and each lot of work produced will be charged with its fair share of the indirect expense.

The direct labor and time cost method of distribution of manufacturing expense used by the Master is based

on the theory that the relationship between manufacturing expense and the direct labor cost incurred and time consumed in production are so related that by the use of this method the manufacturing cost will be fairly distributed over the entire output and may be allocated to each item with reasonable certainty. This method is widely used by manufacturers and gives very satisfactory results if the percentage is properly predetermined. Lawrence on Cost Accounting, Prentice Hall, ch. 15, pages 216 to and including 231. There is no issue raised here as to the correctness of the percentages.

In the absence of any better rule or more weighty evidence, we are of the opinion that there is sufficient correlation between direct labor costs, time and overhead expense to prove the allocation of manufacturing costs to a unit of production. As we view it, the Master adopted a fair rule for determining the savings in overhead of the Ford Company by reason of its use of the infringing machines.

In any event the Master followed the Ford Company's own method of accounting to determine the apportionment of manufacturing overhead to the production of camshafts. The method used may not accurately prove the cost but it is the best approximation that can be made under the evidence. *Duplate* v. *Triplex,* 298 U. S. 448, 458. The court should have sustained the Master in this particular.

The Master awarded The Gordon Company damages based upon a reasonable royalty of $5,000.00 a machine, or $120,000.00. The Ford Company urges on us that there is no substantial evidence to support the Master's findings of any sum in damages. The Gordon Company insists that the damages based upon a reasonable royalty should be six cents per shaft or $480,140.04 and it further insists that the damages should be trebled under the Patent Act (Title 35, U. S. C. A., Secs. 67 and 70).

All of these questions are interrelated and may be disposed of collectively. The Master's findings are based upon evidence and inferences reasonably drawn. As appears from his report, he sought to give proper weight to all considerations. His estimates upon the record

could be an approximation only, but aside from any question of the propriety of the precise method of determining damages, there can be no doubt the result has support in the evidence and does full justice to The Gordon Company. The Master's findings have been approved by the court, we accept them in the absence of clearly recognized mistake. *Topliff* v. *Topliff*, 145 U. S. 156, 174.

The judgment in No. 9122, The Gordon Form Lathe Company v. Ford Motor Company, is modified by increasing the award to the plaintiff in the sum of $120,625.89 savings in overhead allowed by the Master to The Gordon Company and disallowed by the court. The judgment thus modified is affirmed. The judgment in No. 9123, Ford Motor Company v. The Gordon Form Lathe Company, is affirmed.

UNITED STATES CIRCUIT COURT OF APPEALS FOR THE SIXTH CIRCUIT

I, J. W. Menzies, Clerk of the United States Circuit Court of Appeals for the Sixth Circuit, do hereby certify that the foregoing is a true and correct copy of record (Vols. I, II, III and IV) and Proceedings (Vol. V) in the cases of *The Gordon Form Lathe Company* v. *Ford Motor Company; Ford Motor Company* v. *The Gordon Form Lathe Company*, Nos. 9122 and 9123, as the same remains upon the files and records of said United States Circuit Court of Appeals for the Sixth Circuit, and of the whole thereof.

In Testimony Whereof, I have hereunto subscribed my name and affixed the seal of said Court at the City of Cincinnati, Ohio, this 24th day of March, A. D. 1943.

J. W. Menzies,
Clerk of the United States Circuit Court of Appeals for the Sixth Circuit.

(seal)

SUPREME COURT OF THE UNITED STATES, OCTOBER TERM, 1943

No. 49

ORDER ALLOWING CERTIORARI—June 21, 1943

On Petition for Writ of Certiorari to the United States Circuit Court of Appeals for the Sixth Circuit

This Court on June 7 having granted certiorari in this case limited to the first question presented by the petition, and counsel for petitioner having filed a petition for rehearing to broaden the scope of review;

On consideration whereof, it is ordered by this Court that the petition for rehearing be, and the same is hereby, granted. The order entered June 7 is vacated, and the petition for writ of certiorari herein is granted.

It is further ordered that the duly certified copy of the transcript of record which accompanied the petition shall be treated as though filed in response to such writ.

Mr. Justice Roberts and Mr. Justice Douglas took no part in the consideration or decision of this application.

SUPREME COURT OF THE UNITED STATES, OCTOBER TERM, 1943

No. 50

ORDER ALLOWING CERTIORARI—June 21, 1943

On Petition for Writ of Certiorari to the United States Circuit Court of Appeals for the Sixth Circuit

This Court on June 7 having granted certiorari in this case limited to the first question presented by the petition, and counsel for petitioner having filed a petition for rehearing to broaden the scope of review;

On consideration whereof, it is ordered by this Court that the petition for rehearing be, and the same is hereby,

granted. The order entered June 7 is vacated, and the petition for writ of certiorari herein is granted.

It is further ordered that the duly certified copy of the transcript of record which accompanied the petition shall be treated as though filed in response to such writ.

Mr. Justice Roberts and Mr. Justice Douglas took no part in the consideration or decision of this application.

(7177)

INDEX

Subject Index

PAGE

PETITION FOR WRIT OF CERTIORARI 1

Summary Statement of Matter Involved 2

Jurisdiction 10

The Questions Presented 11

Reasons for Granting the Writ 13

BRIEF IN SUPPORT OF PETITION FOR CERTIORARI 17

Opinions of the Courts Below 17

Grounds on Which Jurisdiction is Invoked 17

Statement of the Case 18

Specifications of Errors 18

Argument 19

Point 1 20

On the proposition that a patentee after making a compromise agreement with an infringing manufacturer may rely upon Birdsell v. Shaliol, 112 U.S. 485, *to mulct innocent customers of such manufacturer of much larger sums than any recovery obtainable from the manufacturer.*

Point 2 23

On the proposition that an infringer is liable for actual and not possible gains.

PAGE

Point 3 25

On the proposition that plaintiff offered no proof to show what part of defendant's gains were due to plaintiff's patent, and what to defendant's improvements thereon, whereas, defendant's evidence did so discriminate.

Point 4 30

On the proposition that machines without the patented improvement did as good service as those embodying it.

Point 5 31

On the proposition that a patentee may recover many times more for failure than for success.

Point 6 33

On the proposition of adding a total overhead or burden percentage to alleged direct labor savings.

Point 7 37

As to Damages.

Conclusion 41

Table of Cases Cited

PAGE

Birdsell v. Shaliol, 112 U.S. 485 ..... 13, 20, 21

Dobson v. Hartford, 114 U.S. 439 31
Dowagiac Mfg. Co. v. Minnesota Moline Plow Co., 235 U.S. 641 30
Duplate v. Triplex, 298 U.S. 448 35

Egry Register Co. v. Standard Register Co., 23 Fed. (2d) 438 ..... 14, 28, 29, 30
Exhibit Supply Co. v. Ace Patents Corp., 315 U.S. 126 10

Ford Motor Co. v. Gordon Form Lathe Co., 87 Fed. (2d) 390 ..... 2, 4, 8, 9, 17, 31

Garretson v. Clark, 111 U.S. 120 31
Gordon Form Lathe Co. v. Walcott Machine Co., 20 Fed. (2d) 673 4
Gordon Form Lathe Co. v. Walcott Machine Co., 32 Fed. (2d) 55 ..... 5, 8

Keystone v. Adams, 151 U.S. 139 ..... 8, 31

Lincoln Engineering v. Stewart Warner Corp., 303 U.S. 545 10

Mason v. Graham, 90 U.S. 261 ..... 8, 14, 27, 29, 30
Mason v. Graham, 10 Fed. Cases 931 27
Mishawaka Rubber & Woolen Mfg. Co. v. Kresge Co., 316 U.S. 203 10
Morton Salt Co. v. G. S. Suppiger, 314 U.S. 488 10
Muncie Gear Works v. Outboard Marine & Mfg. Co., 315 U.S. 759 10

PAGE

Rude v. Westcott, 130 U.S. 152 .....32, 40

Sheldon v. Metro-Goldwyn Mayer, 309 U.S. 390 .....8, 14, 23, 25, 30

Tilghman v. Proctor, 125 U.S. 136.....6, 14, 23, 24, 25, 38, 39

Westinghouse v. Wagner, 225 U.S. 604....8, 14, 25, 28, 29, 30

Statutes Cited

35 U.S.C.A. 70; R.S. 4921 .....8, 12, 15, 37, 39

Judicial Code, Sec. 24 (7); 28 U.S.C.A. 41 (7)..... 10

Judicial Code, Sec. 240 (a), as amended by Act of February 13, 1925 (28 U.S.C.A. 347) 10, 17

IN THE

Supreme Court of the United States

OCTOBER TERM, 1942

No.....

FORD MOTOR COMPANY,
Petitioner

vs.

GORDON FORM LATHE COMPANY,
Respondent

PETITION FOR WRIT OF CERTIORARI

To the Honorable the Chief Justice and the Associate Justices of the Supreme Court of the United States:

Your petitioner, Ford Motor Company, respectfully prays that a writ of certiorari issue to review a judgment of the United States Circuit Court of Appeals for the Sixth Circuit, entered February 4, 1943, in the above entitled cause.

Certified transcript of the record in the case, including the proceedings in the Circuit Court of Appeals, is furnished herewith in compliance with Rule 38 of this Court.

SUMMARY STATEMENT OF THE MATTER INVOLVED

Your petitioner, Ford Motor Company, was made defendant in a patent infringement action by respondent, the Gordon Form Lathe Company, as plaintiff, in the United States District Court for the Eastern District of Michigan, Southern Division, alleging infringement of the Gordon and Redlin, United States Letters Patent No. 1,542,803 granted June 16, 1925 (R. 1655-69). The patent relates to a lathe for turning so-called non-geometric articles and specifically the individual cams located in different angular positions along a camshaft for operating the intake and exhaust valves of an internal combustion engine in proper sequence. It was alleged that certain lathes purchased in the open market by the Ford Company from a manufacturer known as the Walcott Machine Company, constituted an infringement and that other machines, not lathes, but milling machines, developed by petitioner, and known as the Pioch milling machine, also infringed. The District Court in an unreported oral opinion held that both the Walcott lathes* and Pioch milling machines infringed the patent. On appeal to the Sixth Circuit Court of Appeals, the holding of infringement by the Ford Company as to the Walcott lathes was sustained but the holding of infringement by the Pioch milling machine was reversed (*Ford Motor Co. v. Gordon Form Lathe Co.*, 87 F. 2nd 390; R. 1358-65).

The case was then referred to a Special Master "to take and report an account of such profits, gains and

*These lathes are referred to in the record both as the "Walcott" and "Melling," the former being a contraction of the manufacturer's corporate name, while the latter is the surname of the inventor of the lathe. In this petition and supporting brief they are consistently referred to as the "Walcott" lathe.

advantages of the defendant, and the damages sustained by the plaintiff by reasons of said infringement, and to compute and report a reasonable royalty for the use of the said machines" (R. 3).

After due proceedings had, the Master rendered a report (R. 4-99) recommending that the respondent was entitled to its choice of the sum of $206,824.22 as profits allegedly realized by petitioner Ford Motor Company or $120,000 as reasonable royalty (R. 93). The said sum of $206,824.22 included the sum of $86,198.33 as savings of direct labor costs, to which was added the sum of $120,625.89 as alleged savings made by petitioner in overhead or burden costs. The entire manufacturing burden percentage, used by petitioner in its cost accounting system for determining *selling prices* of the unpatented products, made only in part by the use of the infringing machines, was *added* by the Master to the alleged savings of direct labor costs.

Both parties filed exceptions to the Master's report (R. 101, 103) and on final hearing the District Court disallowed the addition by the Master of the $120,625.89 as alleged savings of overhead or burden (R. 118), but in all other respects affirmed the Master (R. 1367-8, Par. 7 and 9).

Cross appeals were taken to the Sixth Circuit Court of Appeals (R. 1369, 1371, 1373, 1376). That Court in the judgment here sought to be reviewed in effect adopted the Master's report *in toto,* reinstating the item of burden $120,625.89 (R. Vol. V, 26).*

*The record here is in five volumes; volumes I, II, III and IV being paged 1 to 426 inc., 427 to 882 inc., and 883 to 1403 inc., and 1404 to 1700 inc., respectively containing the transcript of the evidence in the District Court, and Volume V, paged 1 to 26, containing the proceedings in the Court of Appeals.

In August 1922, respondent was engaged in selling its patented machines to users. Petitioner, Ford Motor Company, agreed to purchase one of them for $4,335.00 (R. 284; Ex. 56, R. 1691-92), and tried unsuccessfully to operate it. Finding, after a long period of experimentation, that it was not usable to cut the sharp nosed cams of Ford design, the machine was rejected by petitioner (87 F. 2nd 390 at 391, col. 2).

In the early part of 1924, the Ford Company purchased from the Walcott Machine Company, in the open market, a battery of eighteen of the lathes held to be an infringement (R. 1567-71, Exs. 217-220) and later, early in 1929, bought six more (R. 1572-73, Exs. 221-222). "These machines were designed by Herman W. Melling, a mechanic of considerable ingenuity and experience who, after having seen the unsuccessful operation of a patented Gordon machine at the plant of the Jackson Motorshaft Company in Jackson, Michigan, concluded it was wrong in principle, mode of operation and mechanism and that it could not be made to work properly. Melling designed his machines on the principle of operation of the old Blanchard lathes with which he was familiar" (*Gordon Form Lathe Co. v. Walcott Machine Co.*, 20 F. 2nd 673 at 674). After the issuance of the patent in suit on June 16, 1925, suit was brought by the respondent Gordon Form Lathe Company against the Walcott Machine Company in the District Court for the Eastern District of Michigan, Southern Division. Judge Simons, then District Judge, in a decision rendered July 22, 1927, held that the Walcott lathes designed by Melling followed the teachings of the Blanchard patent issued in 1819 and that they did not infringe the Gordon patent (20 F. 2nd 673 at 675).

On appeal to the Sixth Circuit Court of Appeals, Judge Simons' holding of non-infringement was reversed and the Walcott machines held to be an infringement (*Gordon Form Lathe Co. v. Walcott Machine Co.*, 32 F. 2nd, 55, opinion rendered April 12, 1929).

After the latter decision, as stated by the Court in its opinion in the case here sought to be reviewed, respondent—

> "The Gordon Company entered into a compromise settlement with the Walcott Company which had become financially involved. By the terms of the settlement the Gordon Company accepted $1.00 for all claims of infringement and waived an accounting. In an amended final decree the Walcott Company was ordered to pay the Gordon Company $4,000 costs" (R. Vol. V, 4).

Long before Gordon's invention, and as early as 1914, the Ford Company had adopted, and continuously used until 1924 (R. 7-8) for the production of millions of camshafts, for the old Model T Ford cars a machine known as a *shaper* (R. 142, 1098-99, Ex. 52, R. 1687; Ex. 62, R. 1694; Ex. 63, R. 1695). When the Ford Company changed from the manufacture of its Model T cars to the Model A Ford car in the latter part of 1927 all of the original Model T camshaft shapers had been replaced by the Walcott machines that were purchased by the Ford Company in 1924 and the shapers had been scrapped (R. 624). Although respondent knew of the Ford Company's use of the camshaft shaper for making camshafts (R. 319-20), it presented a record in its litigation against the Walcott Company (the manufacturers of the machines which the Ford Company purchased), in which it represented that, prior to the Gordon-Redlin invention, the only known way of rough machining camshafts was by the use of grinding

wheels, and thereby succeeded in having the Sixth Circuit Court of Appeals in that litigation (32 F. 2nd 55) hold the patent in suit to be a *pioneer* patent in cam cutting and its claims entitled to a liberal, broad interpretation.

Three uses were made by petitioner during the infringing period of the infringing machines for machining camshafts as follows: for the old *Model T* car from June, 1925, to January, 1929; for the *Model A* car, from November, 1927, to March, 1931; and for the *Fordson Tractor* from June, 1925, to March, 1928 (R. 94-95). Respondent knew of the use of the infringing machines from 1924 on (R. 368-9), but did not give notice of infringement until June 12, 1929 (R. 11). This suit was started November 29, 1930 (R. Vol. V, 5).

Throughout the accounting proceedings in the instant litigation, respondent agreed that the prior Ford camshaft shaper was a proper standard of comparison for the machining of the Model T camshafts, yet in an effort to support a claim of approximately a million dollars, it insisted that the worst and most costly standard of comparison, viz, the grinding method (by the use of Landis grinders) should be taken for the machining of the Model A Ford and Fordson tractor camshafts (R. 20). As to the Model A shafts the Master (R. 32), the District Court (R. 118), and the Court of Appeals (R. Vol. V, 19) in this litigation ruled against respondent's contention and accepted the shaper as a proper standard of comparison but refused to accept it for the tractor shaft, holding that as Ford had actually used the Landis grinder for the tractor shafts, this made the grinder the proper standard for these shafts (R. 35; & Vol. V, 19), the Court of Appeals contra to the rule of *Tilghman v. Proctor*, 125 U. S. 136, erroneously stating that—

> "The predicate of the standard of comparison is that the trespasser *would* have used the comparative device but for his infringement * * *" (R. Vol. V, 19).

Petitioner filed an account showing that, instead of deriving any profits, gains or advantages from the use of the infringing Walcott machines, it suffered a loss of approximately $96,000 as compared with the results of using the old shapers (R. Vol. V, 8). The difference between the Master's finding of some $86,000 savings and such loss is due largely to the fact that in the account rendered by petitioner there was included the cost of a straightening operation *actually employed* by petitioner when it used the Walcott lathes *but which straightening operation was not employed when it used the older Ford camshaft shapers* (R. 429, 436-441, 486, 500-1, 534-39, 543, 545-47, 652-56, 768-772, 1111; also Exs. M and N, 1432-1435).

In that part of his report affirmed by both the District Court and the Sixth Circuit Court of Appeals, the Master *found as a fact that the straightening operation was used by the Ford Company* (R. 40) but he refused to allow the extra cost of this operation, stating that petitioner could have made changes in construction of the infringing machines which *might have* eliminated the use of the extra straightening operation (R. 41). The Court below sustained the Master's finding on this point (R. Vol. V, 20-21).

Petitioner introduced in evidence the patents to Melling Nos. 1,512,995 (Ex. 312; R. 1171 & 1640-47), and 1,655,655 (Ex. 209; R. 382 & 1558-66), and showed that the inventions thereof were embodied in the infringing Walcott machines (R. 382-84, 387-88, 1171-2). Petitioner also in-

troduced evidence showing that the inclusion of the inventions covered by these two patents (recognized by the Patent Office to be patentably distinct over the claims of the Gordon-Redlin patent) *were entirely responsible* for those differences in operation between the infringing Walcott lathes which rendered them useful to and usable by petitioner (R. 782, 783, 794), whereas the patented Gordon machine was found to be unusable by and devoid of any utility to, petitioner (87 F. 2nd 390). As respondent made no effort to meet the above proofs, petitioner relying upon the many decisions of this court, such as *Mason v Graham,* 90 U. S. 261; *Keystone v. Adams,* 151 U. S. 139; *Westinghouse v. Wagner,* 225 U. S. 604; *Sheldon v. Metro-Goldwyn Mayer,* 309 U. S. 390, urged that respondent could not recover all of the alleged profits but only those "to which the complainant was justly entitled", and that the burden of proof rested upon respondent to apportion and prove the amount of profits attributable to the infringement (35 U.S.C.A. 70; RS. 4921). Respondent made no attempt to meet this burden but, claiming that the rule of apportionment does not apply to a case where the patent covers a unitary device (R. 60), it submitted no evidence on apportionment, relying solely on its legal contention that the doctrine of apportionment was not applicable here, and that therefore is was entitled to all the alleged profits (R. 69-70).

Although in the *Walcott* case, the Court below held the patent to be a pioneer, it was careful to state that the gist of the Gordon invention resided in the *means for tilting the lathe tool* as the work rotated so as to present the tool at all times on a line extending normal to the point of contact of the cutting edge of the tool with the work piece (32 F. 2nd 57, R. 1357) and in its later opinion the Court reiterated this holding and further held that

the patentees were not entitled to all means for producing the desired result (87 F. 2nd 392, 1st col.).

For the purpose of showing that the *tilting of the tool* was not essential in the operation of the infringing machines, petitioner offered in evidence (R. 1172) the Melling patent No. 1,634,550, granted July 5, 1927 (Ex. 313, R. 1648-52), in which the tool, instead of being maintained normal to the work by a tilting movement, is moved up and down in a straight-line, reciprocating path while being simultaneously moved horizontally back and forth from the work; and introduced evidence proving that a large number of lathes embodying the non-tilting tool construction of this patent was made by the Walcott Company (without suit or even threat of suit on the patent here in suit) and used extensively in the automotive industry and that by making the change from the tilting movement of the tool to the straight line movement thereof, the production of the lathes was increased (R. 1175).

The alternative amount of $120,000 awarded below as "reasonable royalty" is predicated upon the figure of $5,000 per machine for the use of twenty-four machines for but a fractional part of the life of the patent (R. Vol. V, 3 and 25). The evidence showed that although respondent sold a number of its patented machines, in no case did it ask for, or receive, a royalty for the use of the machines, but that instead all such machines were sold outright (R. 281-2)—free and unrestricted—for a lump sum selling price of $4,335 apiece which included an established royalty of 10% of said selling price paid to the patentee (R. 317-18) to cover the manufacture and sale as well as the use of each patented machine so sold. Petitioner's use of the infringing machines *ceased in 1931* (R. 95), whereas the patent ran until 1942.

JURISDICTION

1. This is a suit arising under the patent laws of the United States, Judicial Code, Sec. 24 (7) (28 U.S.C. 41 (7)).

2. The jurisdiction of this Court is invoked under Sec. 240 (a) of the Judicial Code as amended by the Act of February 13, 1925 (28 U.S.C.A. 347).

3. The date of the judgment which petitioner seeks to have reviewed is Feb. 4, 1943.

4. Among the cases believed to sustain jurisdiction to issue the writ, where questions of federal law of far reaching public importance are involved, even where there are no conflicting decisions, are:

Muncie Gear Works v. Outboard Marine & Mfg. Co., 315 U. S. 759;
Mishawaka Rubber & Woolen Mfg. Co. v. Kresge Co., 316 U. S. 203;
Exhibit Supply Co. v. Ace Patents Corp., 315 U. S. 126;
Morton Salt Co. v. G. S. Suppiger, 314 U. S. 488;
Lincoln Engineering v. Stewart Warner Corp., 303 U. S. 545.

THE QUESTIONS PRESENTED

1. May a patentee, who obtains a judgment of infringement against a manufacturer, selling infringing machines to the public, enter into a voluntary compromise with such manufacturer releasing him, meanwhile with full knowledge of use of the infringing machines by a user, permit such use to continue without protest or notice, and then proceed to recover from such user for alleged profits and damages, when the patentee sold all of its patented machines outright with no restriction upon the use thereof?

2. In an accounting for alleged profits resulting from mere use of an infringing machine, may the cost of an additional operation, actually employed during the infringing use, be disregarded on the ground that had additional mechanism, not actually used, been employed, such additional operation might have been eliminated?

3. After the Master, the District Court and the Court of Appeals all adopted concurring fact findings, that the patented machine was not usable by petitioner and that the infringing machines which it did use contained additional patented improvements of others, and petitioner has shown these improvements were entirely responsible for the better performance of the infringing machine over the patented machine, is the respondent justly entitled to recover all of the profits which resulted from the use of such additional improvements?

4. After it has been shown that successful operation of the infringing machine, as compared with the unsuc-

cessful operation of the patented machine, resulted from additional patentable improvements, of others than the patentee, contained in the infringing machines and that the invention of the patent in suit was not essential, may a patentee who fails to carry his *burden of proof* to prove otherwise or to apportion profits, recover all alleged profits from an infringing user?

5. May a patentee who has sold commercially unsuccessful patented machines outright with no restriction upon the use thereof and who established and accepted a royalty payment of 10% of the sales price of such patented machines, recover from a user a sum not only greater than the selling price of the machine but ten times more, as damages, than his own established royalty?

6. May a total overhead burden percentage, added by a defendant to direct labor costs primarily for the purpose of ascertaining the selling price of unpatented products, made only in part by the use of an infringing machine, and covering huge expenditures for plant operations in no wise affected by the use of such infringing machine in place of a non-infringing one, be used to increase alleged savings in direct labor costs in a patent infringement accounting based upon use of an infringing machine?

7. May the provisions of 35 U.S.C.A. 70 (R.S. 4921) relating to reasonable royalty be construed broadly to permit an award of damages, where there is a failure to establish the statutory conditions precedent for such award and to prove that "the complainant has suffered damage or that the defendant has realized profits to which the complainant is justly entitled"?

REASONS FOR GRANTING THE WRIT

All of the questions presented relate to matters of great public importance, each of which either relates to an important question of federal law which has not been, but should be, settled by this Court, or to a federal question decided in a way probably in conflict with applicable decisions of this Court (Sup. Ct. Rule 38, Sec. 5-b), to-wit:

1. The Sixth Circuit Court of Appeals by its decision in this case decided a federal question never directly ruled upon by this court by placing its approval upon a practice by which a patentee, after obtaining a decree of infringement against a manufacturer, who has sold large numbers of infringing machines to the general public, may make a deal with such manufacturer to release the latter upon payment of $1.00 plus a substantial sum as "costs," so that the patentee may, by claiming that the doctrine of *Birdsell v. Shaliol,* 112 U.S. 485, applies, proceed against innocent purchasers in good faith in the open market of the infringing machines, meanwhile with full knowledge of such use permit it to continue without protest or notice and then proceed to procure manifold recoveries of sums many times greater than any recovery that could have been had from the real tort-feasor—the manufacturer.

2. The Court below in refusing to allow the cost to petitioner of an operation (found as a fact by the Master, the District Court and the Court of Appeals to have been actually employed by it in its use of the infringing machines) on the grounds that this additional operation might have been eliminated by the use of additional equipment, which was not actually employed by petitioner,

decided a federal question in a way that conflicts with the rule this Court laid down in *Tilghman v. Proctor,* 125 U.S. 136, namely that the amount of profits derived by infringers of a patent from the use of an invention "is to be ascertained by the manner in which they have conducted their business and not by the manner in which they might have conducted it."

3. The Court below in awarding all of the alleged profits made by petitioner to the respondent in the face of proof by petitioner that any profits resulted from the inclusion in the infringing machines of patented improvements not the property of respondent, decided a federal question in a way that conflicts with the applicable decisions of this Court in *Mason v. Graham, supra, Westinghouse v. Wagner, supra* and *Sheldon v. Metro-Goldwyn-Mayer, supra,* and also in conflict with its own decision in *Egry Register Co. v. Standard Register Co.,* 23 F. 2nd 438.

4. The Court below in awarding all of the profits to the respondent allegedly made by petitioner from the use of the infringing machines, after petitioner had introduced evidence showing that all of such profits resulted from the inclusion in the infringing machines of patentable improvements not the property of respondent, and evidence showing that the use of the alleged inventive features covered by the patent in suit was not essential to the satisfactory performance of the infringing machines, and where respondent failed to carry its burden to prove otherwise, decided a federal question in conflict with the decision of this Court in *Westinghouse v. Wagner, supra.*

5. The Court below has decided a question of great and paramount public importance, never directly passed upon by this Court, or by any other Court, and to the effect that a patentee of a *commercially unsuccessful* patented machine who sold his machines outright with no restriction upon the use thereof, and who accepted a royalty payment based upon 10% of the sales price of such patented machine, may recover many times more for the failure of his machine to operate efficiently than he would have received for the successful operation of the same.

6. The lower Court, by its judgment in this case holding that there should be added to alleged savings in direct labor costs the total manufacturing overhead or burden, (which petitioner added to direct labor costs primarily for ascertaining the selling price to be placed by it upon unpatented products of an infringing machine, and which overhead or burden included huge expenditures for all of petitioner's manufacturing operations, most of which could not possibly have been affected by the use of such infringing machines as compared to a non-infringing machine) has decided a question of paramount public importance never before directly ruled upon by this Court or by any other Court.

7. The lower Court by its judgment in this case has decided a question of paramount public importance, never before directly ruled upon by this Court, in making an award of reasonable royalty in the absence of proof "that complainant has suffered damages as the result of the infringement, or that defendant had realized profits to which the complainant is justly entitled," thereby disregarding the plain import of these permissive provisions

of the statute (35 U.S.C.A. 70; R.S. 4921)—that damage to the complainant or realization of profits by the defendant to which complainant is justly entitled—are conditions precedent which must exist before an award of reasonable royalty may be made.

Wherefore your petitioner respectfully prays that the writ of certiorari be issued to the United States Circuit Court of Appeals for the Sixth Circuit, to the end that this cause may be reviewed by this Court; that the judgment of the Circuit Court of Appeals be reversed; and that petitioner have such other and further relief as may be proper.

Respectfully submitted,

DRURY W. COOPER,
Attorney for Petitioner.

I. JOSEPH FARLEY,
Of Counsel.

BRIEF IN SUPPORT OF PETITION FOR CERTIORARI

OPINIONS BELOW

The opinion of the Circuit Court of Appeals below is not yet reported. It is found at (R. Vol V, 2-26).

The opinion of the District Court on the accounting was delivered orally and has never been reported. It will be found at R. 118-131.

The Master's Report will be found at R. 4-99.

The opinion of the Circuit Court of Appeals on the main case on the issue of infringement will be found at 87 Fed. (2d) 390 (*Ford Motor Company v. Gordon Form Lathe Company*, R. 1358).

The opinion of the District Court in the main case on infringement was delivered orally and has never been reported.

GROUNDS ON WHICH JURISDICTION IS INVOKED

The date of the judgment to be reviewed and other details justifying jurisdiction are set forth at page 10 *ante* of the accompanying petition.

STATEMENT OF THE CASE

The foregoing petition contains a summary of the material facts necessary to an understanding of the reasons relied upon for the allowance of the writ as well as a statement of questions involved in the case. The matters presented for determination of this Court relate solely to questions of law.

SPECIFICATION OF ERRORS

The errors which petitioner will urge if the writ of certiorari is allowed are that the Court below erred:

1. In mulcting petitioner of a large sum based upon use of the machines, after respondent had settled with the manufacturer thereof for the manufacture and sale.

2. In disallowing the cost of an additional operation actually employed by petitioner in the use of the infringing machines.

3. In holding that respondent was entitled to recover all of petitioner's alleged profits resulting from the use of the infringing machines.

4. In holding that the respondent, who failed to carry the burden of proof to apportion profits and who offered no evidence at all on the subject, may recover all of the alleged profits, in the face of uncontradicted evidence of petitioner that the profits were due altogether to added patentable improvements not the property of respondent.

5. In holding that a total overhead or burden percentage covering huge expenditures made by petitioner for plant operations during the infringing period, and in no wise affected by the use of the infringing machines as compared with non-infringing machines, should be added to alleged savings in direct labor costs resulting from mere use of the infringing machines.

6. In granting an award of reasonable royalty in the absence of any proof that respondent had suffered any damages as the result of the infringement or that petitioner had realized profits to which respondent was justly entitled.

7. In awarding a recovery of $206,824.22 as alleged profits or alternatively $120,000 as reasonable royalty.

8. In failing to remand the case with instructions to the District Court to award nominal damages only.

ARGUMENT

This case presents unique questions of far-reaching public importance most of which have never before, as far as we are aware, been presented to any court.

It is believed that the questions presented and the reasons for granting the writ as set forth in the foregoing petition (pp. 11-16) sufficiently summarize the argument.

POINT 1. On the proposition that a patentee after making a compromise agreement with an infringing manufacturer may rely upon Birdsell v. Shaliol, supra, to mulct innocent customers of such manufacturer of much larger sums than any recovery obtainable from the manufacturer.

The facts hereinbefore set forth in the summary statement, show that, after the Court sustained the charge of infringement against the Walcott Machine Company from which petitioner purchased its infringing Walcott machines, in the language of the Court below, respondent,

> "• • • The Gordon Company entered into a compromise agreement with the Walcott Company which had become financially involved. By the terms of the settlement the Gordon Company accepted $1.00 for all claims of infringement and waived an accounting. In an amended final decree the Walcott Company was ordered to pay The Gordon Company $4000 costs" (R. Vol. V, 4).

The evidence shows, however, that the Walcott Machine Company continued in business and during the accounting (R. 564-5; 1172) was still making *inter alia*,

modified machines of the Melling patent (1,634,550, to which we will refer later) still using the Blanchard principle, and that the respondent did not pursue its remedy against the manufacturer of the infringing machines.

Respondent placed its reliance upon the old case of *Birdsell v. Shaliol, supra,* wherein this Court held that payment of nominal damages by the manufacturer of an infringing machine does not release the user thereof. But the facts in the Birdsell case were entirely different from those here. There the recovery against the manufacturer was limited *by the court* to nominal damages in the earlier suit. It was not a question of the infringing manufacturer and patentee making a deal whereby the latter voluntarily accepted (R. 970; Ex. 5, R. 1670-72) the payment of "nominal damages" plus a substantial sum as "costs" in order that he might then proceed against innocent purchasers in good faith for their *use* of the infringing machines, and mulct them of sums larger than any recovery he could possibly have obtained had he pursued his remedy against the infringing manufacturer.

Certainly this court never intended by its decision in *Birdsell v. Shaliol* to establish a precedent of such far reaching and potentially injurious consequences to the general public and industry. If this were the law, the patent system can readily be the means of stifling the industrial progress it is intended to promote, because in these days of highly developed labor-saving machine tools, no manufacturer nor farmer nor business man would dare purchase any labor-saving device except at the peril of having to turn over all the advantages he hoped to obtain, suffer the loss of his original investment therein, and in addition, be amerced a sum added to actual savings

of whatever overhead or burden figure he may have used for computing the selling prices of unpatented articles made only in part by the use of the infringing machines. Every farmer who replaces horse drawn equipment with a tractor having an infringing mechanism incorporated therein could be made to turn over all the savings made by its use as compared with the use of draft animals, plus an additional sum representing a part of the moneys he already paid for taxes, farm buildings and general upkeep and supervision of his farm.

Manifestly the patent law was never intended to permit such a result. Yet that is the very result that was accomplished here. The decision here invites a patentee, having actual knowledge that an infringing manufacturer who made machines in infringement of his patent and sold them to innocent members of the general public under a patent guarantee (Ex. 296, R. 1610), to make a deal with such manufacturer for the payment of nominal damages, meanwhile permitting innocent users to continue their use of the machines for years without giving them any notice, and finally collect from such purchasers many, many times more than the total sum of profits and royalty the patentee would have received if its machines, found unusable by such purchaser, had in fact been usable and the latter had bought the patented instead of the infringing machines.

Surely this practice—never before passed upon by this Court—is of such far reaching public importance as to warrant review and the authoritative approval of this Court if it is in accordance with law, or its stern disapproval of it if it is not.

POINT 2. On the proposition that an infringer is liable for actual and not possible gains.

The Court below decided a federal question in direct conflict with *Tilghman v. Proctor, supra,* wherein it was held:

> "The infringer is liable for *actual* but *not possible* gains. The profits, therefore, which he must account for, are not those which he might reasonably have made, but those which he did make by the use of the plaintiff's invention: * * * (125 U. S. 146).
>
> * * * *
>
> "And the question to be determined is, as stated by Mr. Justice Strong in delivering judgment in Mowry v. Whitney, 'what advantage did the defendant derive from using the complainant's invention, over what he had in using other processes then open to the public and adequate to enable him to obtain an equally beneficial result?' 14 Wall. 620, 651. In determining that question, the expense of using the new process is doubtless to be ascertained by the manner in which the defendants have in fact conducted their business, and not by the manner in which they might have conducted it" (125 U. S. 151).

That this still is the law, is shown by its adoption in the most recent pronouncement of this Court—*Sheldon v. Metro-Goldwyn Mayer,* 309 U. S. 390, at p. 400.

The uncontradicted evidence showed that petitioner in its use of the infringing Walcott machines employed an extra straightening operation not used or employed by petitioner when it used the standard of comparison machine—the Ford shapers (R. 429, 441, 486, 500-1, 534-39,

543, 545-47, 563-4, 652-56, 768-72; Ex. M, R. 1432-3; Ex. N, R. 1434-5).

The Master found that the extra straightening operation was in fact used, stating:

> "I therefore reject this operation as an element of the cost of using the infringing machines, *not on the ground that it was not added upon their installation* (*because I think it was*), but rather on the ground that its addition was not attributable to differences between the two machines" (R. 41).

But he refused to allow it on the ground that the "necessity of straightening *could have been eliminated by modification* of the steady rests or the addition of other steady rests" (R. 41).

The Master recognized the rule of *Tilghman v. Proctor* (R. 41) but refused to apply it, stating "that the actual operation of an infringing machine should not be weighed against a theoretically ideal operation of the standard of comparison" (R. 41-42). Then paradoxically he clearly based his refusal on an assumed theoretically ideal operation of the infringing machine. The District Court did not discuss this question while the Court of Appeals held:

> "The Master found that the Ford Company used an additional straightening operation on the shafts after it began using the infringing Melling-Walcott machines and that the labor cost thereof was the amount claimed by the Ford Company in its accounts * * *" (R. Vol. V, 20).

But the Court of Appeals in affirming the Master apparently did not recognize the correct rule of law enunciated by *Tilghman v. Proctor, supra,* as, like the Master, it refused to follow the rule but rested its affirmance on

the proposition that the legal presumption (as to fact findings) is in favor of the Master's report (R. Vol. V, 20-21).

The judgments of the Master, the District Court and the Court of Appeals therefore in refusing to allow the cost of an operation actually used, in reality based their refusal on the grounds that the infringing machines *might have been altered* to make such operation unnecessary, which is directly *contra* the rule of *Tilghman v. Proctor, supra,* that an "infringer is liable for *actual but not possible gains.*" "* * * *not those which he might reasonably have made, but those which he did make*"; and that "the expense of using the new process is doubtless to be ascertained by the manner in which the defendants *have in fact conducted their business and not by the manner in which they might have conducted it.*"

This departure from the rule presents a question of paramount public importance in that it substitutes speculation for facts, in a patent accounting, the very thing that the rule of *Tilghman v. Proctor* was enunciated to prevent.

POINT 3. On the proposition that respondent offered no proof to show what part of petitioner's gains were due to respondent's patent, and what to patentable improvements thereon not the property of respondent, whereas, petitioner's evidence did so discriminate.

This court in the recent case of *Sheldon v. Metro-Goldwyn Mayer, supra* (a copyright case), in discussing the question of apportioning profits applied broad equitable principles thereto and cited from *Westinghouse v. Wagner, supra,* as follows:

> "The owner of a small part of the fund is as much entitled to the protection of the law as the owner of a larger share. This rule is not intended to penalize the infringer nor to give the patentee profits to which he clearly is not entitled" (225 U. S. 620).

The Court then stated that profits are granted—

> "* * * in accordance with the principles governing equity jurisdiction, not to inflict punishment but to prevent an unjust enrichment by allowing injured complainants to claim that which *ex aequo et bono,* is theirs, and nothing beyond this" (309 U. S. 399).

> "and that to make an award of profits which have been shown not to be due to the infringement would be * * * not to do equity but to inflict an unauthorized penalty" (309 U. S. 405).

also, that when the complainant receives all the profits which have been

> "gained through the use of the infringing material * * * that is all that the statute authorizes and equity sanctions" (309 U. S. 406).

In the instant case, petitioner showed that the patented machine was not only commercially unusable by it, but that others, Jackson Motorshaft Company (R. 1261-4) and International Harvester Company (R. 1132-34) had the same experience with it and that both of these companies went back to the expensive grinding in preference to, and as less costly than, the patented Gordon machine. The Court of Appeals held the patented machine was not usable by petitioner. The Master held the facts to be—

(a) The Gordon machine was impracticable for machining the Ford camshafts (R. 61).

(b) "The Walcott machines (used by petitioner) had two improvements over the Gordon machine devised by its designer, Melling, upon which he obtained patents subsequent to the issue of the Gordon patent" (R. 62), and that "*It seems clear that without these improvements no savings would have been realized by the defendant, at least by comparison with the shaper.*" (Petitioner's prior machine.) (R. 62). (Italics ours.)

The Court of Appeals in substance found the same facts (R. Vol. V, 10).

The decision of the Court of Appeals is also in direct conflict with *Mason v. Graham* (90 U. S. 261).

There the court held that the defendant's machine "performed the same functions and in substantially the same way as complainant's and that the defendant's picker-staff-motion must be considered as practically the same as that patented to the complainants" (90 U. S. at 275).

But the Court held that as the defendant, by using a pattern* of its own devising, had made a savings of 50 cents in the cost of making the infringing devices: "manifestly the complainants are not entitled to the savings or profits resulting from the defendant's own invention" (90 U. S. 276-7).

As to this case the Master stated—

> "it seems to be in point here; and *if followed requires a decision in favor of defendant on the issue*" (R. 67). (Italics ours.)*

---

*The decision of the lower court, *Mason v. Graham*, 10 Fed. Cases 931, held the "pattern" to be an infringement and awarded all of the profits.

Instead of following the rule of *Mason v. Graham* however, the Master stated—

> "Thus, the authoritative cases seem to point to conflicting conclusions on the issue of the right to apportionment in this case, although there is perhaps a slight edge on defendant's side in those most closely in point" (R. 68).**

Petitioner's evidence showed that the patentable improvements of Melling in the infringing Walcott machines were wholly responsible for the improved performance of them over the patented Gordon machine (R. 780-94), which was unusable by petitioner. Petitioner thereby followed strictly every rule, as to burden of proof, laid down by this Court in *Westinghouse v. Wagner, supra,* which the Master discussed (R. 64-66) and recognized, but which he refused to follow (R. 68-69).

Respondent, however, as found by the Master—

> "submitted no evidence to separate the respective contributions of the two patents, relying upon its legal contention that the doctrine of apportionment is not applicable here" (R. 69-70).

The Master then found:

> "The situation here is similar to that in Egry v. Standard Register Co., in this circuit, where the

---

**Respondent urged, and the Master seems to have been influenced by the argument that *Mason v. Graham* was impliedly overruled by *Duplate v. Triplex, infra. Mason v. Graham* was neither cited in the *Duplate* case nor does the latter deal with the question of apportionment. But it was cited with approval by this Court in the later case of *Sheldon v. Metro-Goldwyn Mayer, supra,* which dealt directly with such question. Hence it is clear that *Mason v. Graham* has neither been directly nor impliedly overruled.

> Court held that the record showed no reasonable basis of apportionment" (R. 71).*

He then concluded:

> "Resorting to the books of the defendant would be of no assistance on the issue; the confusion is not related to the books at all. Consequently I conclude that the plaintiff is entitled to all the profits; as between that alternative and allowing the plaintiff none, that is the fairer result" (R. 71).

It will be seen, therefore, that although the Master recognized the rule of *Westinghouse v. Wagner* and *Mason v. Graham,* he not only refused to follow either but also refused to follow the rule of the *Egry* case and rested his judgment, not upon the rule of any authoritative case, but merely on the broad general proposition that as between the alternative of giving the respondent all the profits (to which it manifestly is not entitled), or giving it none, he preferred to give it all.

The District Court did not discuss the question of apportionment, while the Court of Appeals based its refusal to apply the doctrine on the ground that petitioner had failed to carry its burden of proof (R. Vol. V, 12); this in the face of the uncontroverted facts; as found by the Master (R. 69-70) that respondent offered no evi-

---

*In the *Egry* case, 23 F. 2nd 438 (C.C.A. 6), it was found that "an apportionment being necessary, the burden is upon the plaintiff to make it, or show a sufficient excuse for not doing so. * * * under the facts of this case, a substantially accurate apportionment would be a physical and mathematical impossibility; but there was no effort by plaintiff to utilize expert testimony for this purpose" (23 F. 2nd 442). The Court therefore held the entire profit should not have been awarded and that as the plaintiff had full and sufficient opportunity to apportion the profits, but failed to do so, no profits should be awarded.

dence whatsoever on the question of apportionment, while petitioner showed affirmatively that it was Melling's added improvements which made the infringing machine capable of use by it (R. 780-94).

The Court of Appeals therefore decided a federal question in conflict with the appropriate decisions of this court in *Dowagiac Mfg. Co. v. Minnesota Moline Plow Co.* (235 U. S. 641), *Mason v. Graham* (*supra*), *Westinghouse v. Wagner* (*supra*), *Sheldon v. Metro-Goldwyn Mayer* (*supra*), and also in direct conflict with its own decision in *Egry v. Standard* (*supra*).

POINT 4. On the proposition that machines without the patented improvement did as good service as those embodying it.

Petitioner introduced in evidence the Melling patent 1,634,550 (R. 1648-52), in which a straight line up and down movement of the cutting tool is substituted for the tool tilting movement found by the Court of Appeals to constitute the gist of the Gordon invention and showed that a large number of machines embodying this straight line movement were being used—without assertion of infringement by plaintiff—and that the output of the machines was increased rather than decreased (R. 1175), thereby showing that tilting movement of the tool was not necessary or essential to the successful operation of the infringing machines.

In deciding that petitioner had failed to carry its burden of proof after petitioner had shown (a) that the infringing machines contained the later patentable improvements of Melling, (b) that such improvements were entirely responsible for the improved performance of the

infringing machines over the patented machine, the infringing machines being usuable by petitioner while the patented ones were not, (c) that the invention of the patent in suit was not essential to the successful operation of the infringing machine and (d) in the face of the total failure of respondent to offer any evidence on the subject of apportionment,—the Court of Appeals in failing to award but nominal damages decided a federal question in conflict with the decisions of this court in *Keystone v. Adams, supra, Garretson v. Clark* (111 U. S. 120), *Dobson v. Hartford* (114 U. S. 439).

POINT 5.—On the proposition that a patentee may recover many times more for failure than for success.

Respondent offered to sell petitioner its patented machine for $4,335 (R. 317; Ex. 56, R. 1691) and guaranteed that the machine would operate satisfactorily. After a long period of experimentation the machine had so thoroughly demonstrated its impracticability and unusability that petitioner was forced to return the machine (R. 361) as the Court below found (87 F. 2nd 390 at 391).

Petitioner in cross examination of respondent's inventor and president Gordon, after he had denied the payment of any royalty to him on the patented Gordon machines sold by respondent (R. 281), brought out from him the admission, after he was confronted with the entries in respondent's books of account, that a royalty based on 10% of the sales price had been paid on every one of the patented machines sold by respondent (R. 318). This royalty was established and followed throughout respondent's entire active business life, and it covered both manufacture and sale as well as the full free and

unrestricted use of the patented machines for the entire seventeen year life of the patent. Respondent thereby placed its own evaluation on its invention.

Petitioner was entirely willing to buy respondent's machine and to pay the full sales price therefor, including the royalty if such machines were usable by it. Yet because such machines were a complete failure respondent has claimed it is entitled to approximately a million dollars (R. 316) and the Court of Appeals has awarded nearly a quarter of a million dollars for petitioner's mere use of the infringing Walcott machines, including therein all of the savings or advantages thereof resulting from patentable improvements which do not belong to respondent but were contributed solely by the later inventions of Melling.

The only evidence offered by respondent that furnished any basis for the Master's alternative award of $5,000 per each infringing machine as reasonable royalty (R. 80) was the *settlement* agreements made by respondent with the White Motor Company, the Nash Company and the Case Company *long after the beginning of the infringing period* and therefore clearly not admissible under the rule of *Rude v. Westcott*, 130 U. S. 152.

These agreements contained a provision they were not to be used to determine the extent of liability in any future litigation (R. 964-968, 1529, 1542, 1545-6, 1550), thereby rendering them even more clearly inadmissible. It was further testified to by the former secretary of the White Motor Company (called as a witness by petitioner) that "it was not at all a question of royalty or reasonableness" (R. 523) and that he was settling "with a gun at his head" (R. 522).

In view of these undisputed facts no award of royalty over and above respondent's own evaluation of its patent as 10% of the sales price of a machine can be either legal, logical or reasonable. And even as to this, due consideration should be given to the facts that (a) had it pursued its remedy against the Walcott Company instead of making a compromise settlement with it, respondent's established ten percent royalty would have been a part of its measure of damages against Walcott, and (b) that petitioner's use of the infringing machines was but for a fractional part of the life of the patent since it ceased in 1931 whereas the patent ran until 1942.

This is a question of paramount public importance never directly passed upon by this Court.

POINT 6. On the proposition of adding a total overhead or burden percentage to alleged direct labor savings.

The Master in discussing the question of *overhead or burden* stated:

> "In considering the authorities on the proper method of determining savings of this type, I have found no reported patent cases where the defendant's profits were determined, as here, by the standard of comparison method which discuss the treatment of overhead savings as such, but consideration is given to overhead if at all, only in terms of its elements" (R. 49). (Citing *Morgan Construction Co. v. Forter-Miller Engineering Co.*, 234 F. 327)* (R. 50).

---

*(This case was one, however, where the cost of an additional operation used with the patented construction was allowed as an element of *cost.*)

Manifestly in a case where profits are determined by the standard of comparison method, it is *those elements of overhead and only those which would be directly affected by the change from the use of the infringing machine to the standard of comparison machine that should be taken into consideration.* Yet the Master added as *savings* a total manufacturing overhead or burden percentage which under any system of accounting never represents anything but *inevitable expense.* The Court below in a footnote (R. Vol. V, 22) listed those items, the cost of which, in order to establish selling prices, were added by petitioner to direct labor costs on a percentage basis. Examination of this list of items shows immediately that practically all of them would be entirely unaffected by the change from the use of but eighteen machines and nine men per eight-hour shift for the major part of the infringing period as compared with the suppositious use of approximately the same number of another type of machine and operators therefor in respondent's River Rouge plant containing several thousand machines and many thousands more of employees.

The Master could find no case (and the Court below cites none) which supported his position because all of the patent accounting cases for infringement, where *total* overhead or burden is considered, are those involving manufacture and sale as distinguished from mere use, and in those cases *it is always allowed as a deduction.* He ruled that as petitioner applied a total overhead burden figure to direct labor costs in its accounting practice in order to ascertain selling costs it was in effect bound by its own accounting practices. He referred to general accounting practice of applying overhead percentages to direct labor costs, and cited this Court's lan-

guage in *Duplate v. Triplex* (298 U. S. 448, 468) in support of his holding (R. 57).

The practice of adding a total overhead or burden to direct labor costs in any manufacturing plant to determine *selling* prices of unpatented products obviously bears absolutely no relation to the *comparative manufacturing costs of two different machines* for performing the same operation in making such products.

The District Judge in his oral opinion (R. 118-31) clearly recognized the distinction. As so aptly stated by him:

> "In the first place, I do not think that a defendant's own books, or anyone else's books are binding upon them as to results for which they are not kept. And I do not think that is in conflict with Judge Cardozo's decision" (R. 121)*.

He carefully analyzed some of the items such as supervision and taxes and then further correctly stated that the addition of the total overhead burden worked "a very unjust result" (R. 123) and reversed the Master on this point.

The holding of the Master and the Court of Appeals with respect to this addition of a total overhead or burden percentage is not a fact finding, but an attempted application of a rule of law from cases dealing with *selling prices* of infringing manufactured products, to an altogether different type of case dealing with *savings*, resulting from the mere use of an infringing machine as com-

---

*This reference by the District Judge is to Mr. Justice Cardozo's opinion for the Court in *Duplate v. Triplex*, 298 U. S. 448, 468 which was strongly urged upon him in argument by counsel for respondent.

pared with the suppositious use during the infringing period of a standard of comparison not actually used in said period but which was clearly available for use. That the situations are not at all analogous is evident from the fact that in the first type of cases, overhead if properly proved and allocated is always allowed as a *deduction* from gross profits, here however it is used to *pyramid* alleged savings (R. 1015); with the result that if the decision below on this point is affirmed petitioner will be amerced $120,000 in addition to such inescapable expenses as taxes, etc. for which fixed sums were actually paid by petitioner during the infringing period and the amount of which sums could not have possibly been varied either up or down by the substitution of one machine for another.

We submit it to be perfectly clear that even if the purely fictitious saving of $86,000 in direct labor costs were made by petitioner by its use of the infringing machines as compared with supposititious use of a standard of comparison machine, during the five year infringing period, it cannot possibly be logical to assume that petitioner would have spent $120,000 less for taxes, locomotives, freight cars, insurance, etc., etc., simply because in order to establish selling prices, petitioner added an average burden percentage of 140% to direct labor costs to take care of and properly allocate the total general manufacturing expenses actually incurred by it during those years in maintaining and operating its whole River Rouge Plant.

As the question here under discussion is one of great public importance that has never been directly ruled upon by this Court, or by any other Court outside of the instant

case, it is respectfully submitted that the judgment of the Court of Appeals, which may be employed to establish a harmful precedent, calls for review by this Court.

POINT 7. As to Damages:

The doctrine of reasonable royalty was written into the statute by the revision of Section 4921 R.S. (35 U.S.C.A. 70), by the act of February 18, 1922.

For convenience in discussion, we have interjected reference numerals in the text of the statute and use italics to emphasize the conditions under which it may be applied:

> "* * * If on the proofs it shall appear (1) that complainant *has suffered damage* from the infringement, or (2) that the defendant *has realized profits* therefrom (3) *to which the complainant is justly entitled,* (4) *but that* such damages or profits are not susceptible of calculation and determination with reasonable certainty, *the court may,* (5) on evidence tending to establish the same, in its discretion, receive opinion or expert testimony, which is hereby declared to be competent and admissible, subject to the general rules of evidence applicable to this character of testimony; and *upon such evidence and all other evidence in the record,* the court may adjudge and decree the payment by the defendant to the complainant of a *reasonable sum* as profits or general damages for the infringement * * * ."

The statute clearly sets forth certain conditions precedent for assessment of reasonable royalty, as follows:

(1) "that the complainant has suffered damage from the infringement, or"

(2) "that the defendant has realized profits therefrom"

(3) that such profits must be those "to which the complainant is justly entitled"

(4) "that such damages or profits are not susceptible of calculation and determination with reasonable certainty.

(5) that "the court may on evidence tending to establish the same * * * receive opinion or expert testimony * * * and upon such evidence and all other evidence * * * decree the payment * * * of a reasonable royalty."

As far as the *first condition precedent* is concerned no proof of any actual damage whatsoever was offered by respondent. It offered its patented machines to petitioner; they would not serve their intended purposes, as all the tribunals have held (*supra* p. 4) and on that account they were rejected.

As to the *second condition precedent;*—if the correct rule of law (*Tilghman v. Proctor, supra*) is applied, and the costs of operation of the infringing machines, as compared with defendant's earlier cam shaft shapers, is computed by reference "to the manner in which the defendant actually conducted its business and not by the manner in which it might have conducted it" (125 U.S. at page 151) *the cost of the additional straightening operation must be added* with the result that petitioner *suffered a loss* by using the infringing machines *rather than realizing a profit.*

As to the *third condition precedent;*—even if this court's established rule in *Tilghman v. Proctor* be disregarded and alleged profits are predicated, not upon petitioner's actual use of the infringing machines, but upon the grounds that it might have used them more efficiently had

it changed their construction, the query remains—"Is the complainant justly entitled to these alleged profits?" In the face of the record showing that all advantages to petitioner of the infringing machines resulted from Melling's later patented improvements, and the Master's fact finding (concurred in by both the District Court and the Court of Appeals) "*that without these two improvements no savings would have been realized by defendants*", (R. 62) it is clear that even if the rule of *Tilghman v. Proctor* be disregarded and the extra cost of the straightening operation be disallowed, still respondent is not justly entitled to the alleged (*but purely fictitious*) profits. Respondent's patented machine built strictly in accordance with the disclosure of its patent in suit (R. 347-50) (which must under the statute disclose the inventor's *best embodiment*) and which therefore contained physically all Gordon and Redlin *actually invented* as distinguished from the esoteric definition thereof as contained in the claims of the patent was, without more, not usable by, and of no utility to petitioner. The infringing machines, which differed from the patented machines by the inclusion of Melling's later and patented improvements, were usable by petitioner, therefore the alleged but fictitious profits resulting from the Melling machines could not possibly be those to which respondent is justly entitled.

The record shows that giving the patented machine the benefit of every doubt, its potential output in machining petitioner's cam shafts did not exceed five shafts per hour (R. 630). It necessarily follows that any output which petitioner obtained from the infringing machines in excess of five shafts per hour must have clearly resulted entirely from Melling's contributions. It is equally clear that respondent is not justly entitled to claim the benefit of sav-

ings or advantages of patentable improvements not made by Gordon and Redlin but by a later inventor.

Hence, since all of the first three conditions precedent of the statute (R.S. 4921) are clearly lacking, there is no basis for an award of reasonable royalty in this case except by disregarding the clear and unequivocal provisions of the statute.

As to the *fourth condition precedent,* the Master as well as the accountants for both parties prepared accounts in which profits and loss were calculated and determined with remarkable accuracy and certainty (Schedule "C", R. 99 and Ex. "C", R. 171-195; Exs. "Z3" to "Z7", R. 1493-1523).

As to the *fifth condition precedent*: *although no proper* foundation for the reception of opinion evidence was laid as evidenced by the foregoing, respondent did offer opinion evidence on the subject of a royalty of so much per shaft produced—the unpatented product of the machine. It offered no evidence, opinion or otherwise, on what a reasonable royalty on the machine (the thing covered by the patent as distinguished from its unpatented product) would have been *at the beginning of the infringing period.* Instead it offered evidence clearly inadmissible under *Rude v. Westcott, supra,* of settlement agreements made by it with others *but not entered into until nearly the termination of petitioner's infringing period.*

Hence none of the five conditions precedent of the statute were met or complied with to warrant an award of a lump sum of $5,000 per machine. Moreover a royalty of over 100% of the gross selling price of a machine could hardly be termed *reasonable* in accordance with the plain intent of the statute.

CONCLUSION

On the foregoing argument, it is submitted that the Circuit Court of Appeals was in error in the several respects covered by the petition and brief; that its errors are in matters of wide and general importance; that it has departed from the rules prescribed by this Court; and that its judgment is entirely erroneous.

Wherefore your petitioner prays that its petition be granted; that the writ of certiorari be issued and the cause reviewed; and that the decree of the Circuit Court of Appeals for the Sixth Circuit be reversed.

Respectfully submitted,

DRURY W. COOPER,
Attorney for Petitioner.

I. JOSEPH FARLEY,
Of Counsel.

SUBJECT INDEX

Page

1. OPINIONS BELOW 1

2. JURISDICTION 3

3. STATEMENT OF THE CASE 3

   (a) Present Litigation 3

   (b) Chronological Resume of Material Facts 6

   (c) Circumstances Surrounding Petitioner's Purchase of Gordon and Walcott Machines 10

   (d) Respondent's Activities after Final Decision in the cast of Gordon v. Walcott, supra 12

   (e) The Settlement between Respondent and Walcott Company 14

4. SPECIFICATIONS OF ERRORS ASSIGNED TO BE URGED 19

5. SUMMARY OF ARGUMENT 20

6. ARGUMENT 21

   A. POINT 1. On the Proposition That a Patentee After Making a Compromise Agreement with an Infringing Manufacturer May Rely Upon Birdsell v. Shaliol, 112 U. S. 485, to Mulct Innocent Customers of Such Manufacturer of Much Larger Sums Than Any Recovery Obtainable from the Manufacturer 21

Page

(a) Respondent Suffered No Damage from Petitioner's Use of the Infringing Machines and Offered No Proof of Damage 21

(b) Speculations of Master—re Damages 23

(c) The Gordon-Walcott Settlement Agreement .. 25

(d) Respondent's Laches in Giving Notice 32

(e) Birdsell v. Shaliol Does Not Apply to the Situation Here 34

B. POINT 2. On the Proposition That An Infringer Is Liable for Actual and Not Possible Gains .. 43

(a) The Opinions Below on this Point 43

(b) The Evidence on the Actual Use of the Extra Straightening Operation 46

(c) The Evidence on the Possibility of Altering the Infringing Machines 50

(d) The Physical Characteristics and Functioning of a Shaper as Compared with a Lathe Demonstrate the Necessity for Using the Extra Straightening Operation with the Latter 52

C. POINT 3. Apportionment 55

(a) The Opinions Below 55

(b) The Inclusion in the Infringing Machines of the Later Patented Automatic Melling Two-cut Mechanism 56

(c) The Inclusion in the Infringing Machines of the Valuable and Later Patented Blanchard Principle 59

Page

(d) The Tilting or Oscillating Tool Is Not Necessary or Essential to the Successful Functioning of the Infringing Machines 64

(e) Analysis of the Master's Opinion on Apportionment 65

(f) Decision of the Court of Appeals 69

7. CONCLUSION 78

Table of Cases Cited

Atlantic Works v. Brady, 107 U. S. 192 ..... 26, 27

Bassick v. Hollingshead Co., 298 U. S. 415 31
Birdsell v. Shaliol, 112 U. S. 485 ..... 21, 26
Blake v. Robertson, 94 U. S. 728 22
Blanchard v. Eldridge, 3 Fed. Cas. 622 61

Callaghan v. Myers, 128 U. S. 617 39
Carver v. Hyde, 16 Pet. 513, 41 U. S. 513 31
Christensen v. National Brake & Electric Co., 10 F. 2d. 856 68
Cincinnati Car Co. v. New York Rapid Transit Corp., 66 F. 2d. 592 73

Dean v. Mason, 61 U. S. 198 53
Deibel v. Heise & Schumacher, 46 F. 2d. 570 8
DeLaski & Thropp v. Empire R. & T. Co., 239 Fed. 139 39
Dowagiac Mfg. Co. v. Deere & Webber Co., 284 Fed. 331 38
Dowagiac Mfg. Co. v. Minnesota Moline Plow Co., 235 U. S. 641 ..... 17, 40, 72
Duplate v. Triplex, 298 U. S. 448 67

Page

Egry v. Standard Register Co., 23 F. 2d. 438 67

Ford Motor Company v. Gordon Form Lathe Co., 87 F. 2d. 390 ..... 2, 4, 15, 63
Ford Motor Company v. Gordon Form Lathe Co., 90 F. 2d. 999 2

General Electric Co. v. Wabash Co., 304 U. S. 364 31
Gordon Form Lathe Co. v. Walcott Machine Co., 20 F. 2d. 673 ..... 3, 8
Gordon Form Lathe Co. v. Walcott Machine Co., 32 F. 2d. 55 ..... 3, 11, 15, 25, 28, 30, 62, 66
Gordon Form Lathe Co. v. Ford Motor Co., 133 F. 2d. 487 2

Keystone v. Adams, 151 U. S. 139 17
Knapp v. Morss, 150 U. S. 221 31
Kryptok Co. v. Stead Lens Co., 190 Fed. 767 39

Lincoln Engineering Co. v. Stewart Warner Co., 303 U. S. 545 ..... 31, 58
Lovejoy v. Murray, 3 Wall 1 36

MacDonald v. Hornblower and Weeks, 268 Mich. 626, 256 N. W. 572 37
Martin v. Friendly, 58 F. 2d. 421 8
Mason v. Graham, 90 U. S. 261 ..... 17, 68
McBride v. Scott, 132 Mich. 176, 93 N. W. 243 37
Mowry v. Whitney, 81 U. S. 620 54

Philadelphia, etc., Ins. Co. v. Edison Electric Light Co., 65 Fed. 551 39
Pope Mfg. Co. v. Gormully, 144 U. S. 224 29

Reo v. Gear Grinding, 42 F. 2d. 965 13
Rome Grader & Machinery Corp. v. Adams Manufacturing Co., 135 F. 2d. 617 33
Root v. Railway, 105 U. S. 189 21

Page

Sheldon v. Metro-Goldwyn Pictures Corp., 309 U. S. 390 ..... 17, 54, 77
Steam Stone Cutter v. Sheldons, 15 Fed. 608 35
Steam Stone Cutter v. Sheldons, 21 Fed. 875 35
Steam Stone Cutter Co. v. Windsor Mfg. Co., 17 Blatch C. C. 24 35
Stebler v. Riverside Heights Orange Growers' Association, 214 Fed. 550 38
Sunlin v. Skutt, 133 Mich. 208, 94 N. W. 733 37

Tilghman v. Proctor, 125 U. S. 136 ..... 16, 43, 54
Tompkins v. Erie, 304 U. S. 64 36

Union Tool Co. v. Wilson, 259 U. S. 107 41
Wagner Sign Service v. Midwest News Reel Theatres, 119 F. 2d. 929 41
Webster Electric Company v. Splitdorf Electrical Company, 264 U. S. 463 29
Westinghouse v. Wagner, 225 U. S. 604 ..... 17, 56, 68
Wine v. Enterprise, 297 U. S. 387 33

Statutes Cited

Revised Statute Sec. 4921 (35 U.S.C.A. 70) ..17, 22, 43, 54
United States Judicial Code, Sec. 24 (7), 28 U.S.C.A. 41 (7) 3

United States Judicial Code, Sec. 240 (a), 28 U.S.C.A. 347 3

IN THE

Supreme Court of the United States

OCTOBER TERM 1943

No. 49

No. 50

FORD MOTOR COMPANY,

Petitioner

vs.

GORDON FORM LATHE COMPANY,

Respondent

BRIEF FOR PETITIONER

---

1. OPINIONS BELOW

This case comes before this Court by reason of the granting of the writ of certiorari to review a decision of the Sixth Circuit Court of Appeals in the cases (cross appeals) of *Ford Motor Company v. Gordon Form Lathe*

Company, and *Gordon Form Lathe Company v. Ford Motor Company*, 133 F. 2d 487; R. Vol. V.)* rendered in a patent accounting. After the original grant of certiorari, limited to the first question presented only, petitioner secured by rehearing, certiorari as to the second and third questions, also.

The opinion of the District Court (Eastern District of Michigan, Southern Division, Judge Tuttle) delivered orally on exceptions to the Master's Report is not reported but will be found at R. 118-131. The Master's Report is reproduced at R. 4-99.

Opinion of the Sixth Circuit Court of Appeals on the main case of validity and infringement of the patent in suit No. 1,542,803 *Gordon Form Lathe Company v. Ford Motor Company* is reported at 87 F. 2d 390, and is reproduced in R. Vol. V., pp. 1 to 26.

Decision on rehearing *Ford Motor Company v. Gordon Form Lathe Co.*, 90 F. 2d. 999, the oral opinion of the District Court, delivered at the conclusion of the main trial is not reported.

An earlier opinion of the Sixth Circuit Court of Appeals involved the same patent in suit and was brought

---

*The record here is in five volumes, Vols. I, II, III, being paged 1 to 426, inc., 427 to 882, inc., and 883 to 1403, inc., respectively, and containing the transcript of the evidence before the Master. Volume IV, paged 1404 to 1700, inc., containing reproductions of the exhibits introduced, and Vol. V, paged 1 to 26 containing the proceedings in the Circuit Court of Appeals. References herein to pages in the first four volumes will be as follows: R. ....., and to the proceedings in the Court of Appeals as R. Vol. V.....

by respondent against the manufacturer from whom petitioner purchased its infringing machines, i.e., lathes for turning automobile engine cam shafts, *Gordon Form Lathe Co. v. Walcott Machine Co.*, 32 F. 2d 55; an appeal from the District Court for the Eastern District of Michigan, Southern Division, *Gordon Form Lathe Co. v. Walcott Machine Co.*, 20 F. 2d 673, opinion by Judge Simons.

2. JURISDICTION

1. This is a suit arising under the patent laws of the United States, Judicial Code, Sec. 24 (7) (28 U.S.C.A. 41 (7)).

2. The jurisdiction of this Court is invoked under Sec. 240 (a) of the Judicial Code as amended by the Act of February 13, 1925 (28 U.S.C.A. 347).

3. The date of the judgement which petitioner seeks to have reviewed is February 4, 1943.

4. The writ of certiorari was granted by this Court June 7, 1943; rehearing granted June 21, 1943.

3. STATEMENT OF THE CASE

(a) *THE PRESENT LITIGATION*

Your petitioner, Ford Motor Company, was made defendant in a patent infringement action by respondent, the Gordon Form Lathe Company, as plaintiff, in the United States District Court for the Eastern District of Michigan, Southern Division, alleging infringement of the Gordon and Redlin, United States Letters Patent No.

1,542,803 granted June 16, 1925 (Ex. 2*, R. 1655-69). The patent relates to a lathe for turning so-called non-geometric articles and specifically the individual cams located in different angular positions along a camshaft for operating the intake and exhaust valves of an internal combustion engine in proper sequence. It was alleged that certain lathes purchased in the open market by the Ford Motor Company from a manufacturer known as the Walcott Machine Company, constituted an infringement and that other machines, not lathes, but milling machines, developed by petitioner, and known as the Pioch milling machine, also infringed. The Pioch machines were those adopted by petitioner after it ceased to use the Walcott lathes, here involved, which it did shortly after notice of infringement was served on it in June 1929. The District Court in an unreported oral opinion held that both the Walcott lathes** and Pioch milling machines infringed the patent.

On appeal to the Sixth Circuit Court of Appeals, the holding of infringement by the Ford Company as to the Walcott lathes was sustained but the holding of infringement by the Pioch milling machine was reversed (*Ford Motor Company v. Gordon Form Lathe Co.*, 87 F 2d 390; R. 1358-65).

---

*As the printed transcript of the evidence as contained in Vols. I and II was reduced considerably by stipulation (R. 1382-1394) references to pages of the record where exhibits were offered in evidence can not in all cases be given in accordance with Rule 27 (3) as to many of the exhibits referred to herein.

**These lathes are referred to in the record both as the "Walcott" and "Melling," the former being a contraction of the manufacturer's corporate name, while the latter is the surname of the inventor of the lathe. In this brief they are consistently referred to as the "Walcott" lathe.

The case was then referred to a Special Master "to take and report an account of such profits, gains and advantages of the defendant, and the damages sustained by the plaintiff by reasons of said infringement, and to compute and report a reasonable royalty for the use of the said machines" (R. 3).

After due proceedings had, the Master rendered a report (R. 4-99) recommending that the respondent was entitled to its choice of the sum of $206,824.22 as profits allegedly realized by petitioner Ford Motor Company or $120,000 as reasonable royalty (R. 93). The sum of $206,824.22 was reached by adding to the alleged savings of $86,198.33 in direct labor costs, the amount of $120,625.89 as alleged savings made by petitioner in overhead or burden costs. The entire manufacturing burden percentage, used by petitioner in its cost accounting system during the infringing period solely for the purpose of establishing selling prices for its manufactured products, and in order that huge annual expenditures for such items as taxes and other indirect expenses, the amount of which could not possibly be affected by the infringement, was added by the Master to the alleged savings of direct labor costs.

Both parties filed exceptions to the Master's report (R. 101, 103) and on final hearing the District Court disallowed the addition by the Master of the $120,625.89 as alleged savings of overhead or burden (R. 118-129), but in all other respects affirmed the Master (R. 1367-8, Par. 7 and 9).

Cross appeals were taken to the Sixth Circuit Court of Appeals (R. 1369, 1371, 1373, 1376). That Court in the judgment here sought to be reviewed in effect adopted the Master's report in toto, reinstating the item of burden $120,625.89 (R. Vol. V, 26).

(b) *CHRONOLOGICAL RESUME OF MATERIAL FACTS*

As the history of the patented invention, and of petitioner's relation to it bears importantly on the questions here presented for consideration, the following statement of material facts chronologically arranged is presented.

Long before Gordon's invention, and as early as 1914, the Ford Company had adopted, and continuously used until 1924 (R. 7-8) for the production of millions of camshafts, for the old Model T Ford cars a machine known as a *shaper* (R. 142, 1098-99, Ex. 52, R. 1687; Ex. 62, R. 1694; Ex. 63, R. 1695).

In 1917 the Ford Motor Company began the production of the well-known Fordson tractor (R. 1114). It is by now a matter of such common knowledge the Court may take judicial notice of it that petitioner, Ford Motor Company, was, as stated by the witness Brush, (himself a pioneer in the automotive industry) "the pioneer in this country at least, and I think in the world, in having machine tool designers build machine tools where the whole machine tool was specialized to a single—very often a single operation, on a single work piece." (R. 762). Because of the fact that the Fordson tractor production was but from 400 to 500 per day as compared with the model T production of 8000 to 8500 a day (R. 623), it was not considered advisable to build any special equipment for it at that time (R. 1102) and inasmuch as all of the shapers, which were special purpose machines, were being used on model T production, there were none available for use on the model F. shafts, (R. 1127) and moreover as it was during war time and the Ford Company was in a hurry to have the necessary available machinery, it merely pur-

chased grinders which could be obtained on the open market for the rough finishing of the cams of the camshaft shapers (R. 1098).

In addition to rough grinding the camshafts for Fordson tractors, the Ford Company also farmed out to other companies the job of machining its *tractor* camshafts. Among the companies to which the Ford Company let contracts for machining its tractor camshafts was the Jackson Motor Shaft Company of Jackson, Michigan—not otherwise related to petitioner. To this company in the latter part of 1919 came Mr. Redlin, Gordon's co-inventor, who induced it to purchase a machine constructed in accordance with the Gordon patent in suit, which was delivered in the early part of 1920. Mr. Gordon's son accompanied the machine in and worked on the machine when it was set up to do the Fordson camshaft job, and found it impossible to make the machine do that work (R. 1262). Because of the failure of this first machine, respondent, or its then representatives, shipped the machine back and sent out another machine which also proved to be a failure, although respondent's representative, Mr. Goddard, spent a number of weeks trying to get the machine to work. (R. 1262). The Jackson Motor Shaft Company attempted to operate these machines for some five or six months (R. 1267), but, finding them too costly and inefficient, returned to grinding the cams (R. 1263, 1272, 1288).

At the time the Jackson Motor Shaft Company was attempting to operate the Gordon and Redlin lathes, it had done considerable business with one Herman W. Melling and he was called in by that company to see if he could assist them in their endeavors to make the Gordon-Redlin machine operate satisfactorily. This is referred to in

the opinion of Judge Simons rendered July 22, 1927, in the suit of the *Gordon Form Lathe Company v. the Walcott Machine Company* as follows:

> " • • • Melling, a mechanic of considerable ingenuity and experience, was called in to examine a Gordon and Redlin lathe in operation at the plant of the Jackson Motor Shaft Company, which was not performing as expected. He concluded upon examination, that it was wrong in principle, mode of operation and mechanism, and that it could not be made to work properly. Being familiar with grinding machines, and with the old Blanchard lathe, he set about to design a cam cutting machine which should be built upon principles that to him seemed sound, he designed a cam cutting lathe and attempted to secure a patent on his device" (20 F. 2d 673).

Melling designed a cam turning machine which was built by the Walcott Machine Company for the Jackson Motor Shaft Company, installed in their plant and operated satisfactorily. On October 13, 1920, Melling made application for a patent on his machine.

After Melling filed, an Interference between Melling's application and the application filed by Gordon and Redlin for the patent in suit was declared. In accordance with the usual Patent Office practice, the claims which formed what are called the counts of the Interference were given the broadest possible interpretation for the purpose of determining the sole question presented in a Patent Office interference, namely, that of priority of invention.

Martin v. Friendly, 58 F. 2d 421;
Deibel v. Heise & Schumacher, 46 F. 2d 570.

As Melling could not establish as early a date of invention as Gordon, he tried to have the interference dissolved, urging *inter alia* that the Gordon machine was inoperative. But as it has long been the established rule of the Patent Office and the Courts that but a very slight degree of operability (rather than commercial availability) is required to support patentability, the Patent Office denied Melling's motion to dissolve the interference. This decision of the Patent Office was rendered November 14, 1922. The Interference appeals through the various tribunals of the Patent Office and to the Court of Appeals of the District of Columbia were decided adversely to Melling on the question of priority. We mention these proceedings in connection with the struggle between Melling and Gordon in the interference proceedings because of the fact that counsel for respondent has heretofore argued repeatedly in this case, particularly before the Master, that the question of operativeness of the Gordon machine is foreclosed in this suit. The findings however made by the various tribunals in the interference proceedings and indeed in the case of *Gordon v. Walcott,* however justified they may have been on the broad question of operability, were based on a different record than now presented to this Court for it is now shown that respondent's machine was not only not capable of doing petitioner's work, but that others had a like experience with it so that at the time of the trial of the main case against this petitioner Mr. Gordon was compelled to admit that he did not know of any place where one of his machines was operating (R. 290).

At or about the same time that respondent sold one of the machines of the patent in suit to the Jackson Motor Shaft Company, it also induced the International Harvester Company to buy one of them. The experience

of the International Harvester Company was the same as that of the Jackson Motor Shaft Company. The Gordon patented machine proved so inefficient and costly to operate that International Harvester also relegated the patented machine to the scrap pile and returned to the use of a grinding machine for the rough machining of the cams of its camshafts (R. 1130-1170, 1271-1299).

(c) *CIRCUMSTANCES SURROUNDING PETITIONER'S PURCHASE OF GORDON AND WALCOTT MACHINES*

As early as July 15, 1922 petitioner ordered a patented Gordon machine, the price of which was set at $4335 (Ex. 56, R. 1043). This machine was delivered to the petitioner on May 16, 1923 (Ex. 55, R. 1690), and remained in the Ford plant until the 30th of July 1924, except for a period from August 1923 until December 1923 when the machine was returned to the manufacturer to permit, under respondent's direction, the making of such alterations, repairs, overhauling or rebuilding as would put the machine in condition to properly perform its intended function of machining the petitioner's camshafts. In January 1924, after the Gordon machine had been in respondent's possession for four months and was then returned to the Ford Company and had again demonstrated its inability to cut the Ford Company cams properly, in spite of all the inventor could do to make it work (R. 286-7), the Ford Company purchased two of the Walcott machines subsequently held to infringe. One of these was purchased for the purpose of machining the cams of the Ford Company's Model F-446 Tractor Camshaft (Ex. 218, R. 1568) and the other (Ex. 217, R.

1567) for the purpose of machining the cams of the Model T-410 Camshafts.

In April 1924 sixteen additional Walcott machines were purchased by the Ford Company, fifteen thereof being for the Model T Camshaft (Ex. 219, R. 1569) and one for the Model F Tractor Camshaft (Ex. 220, R. 1571). The two machines purchased in January were priced at $4150 each and the sixteen machines bought in April were priced at $4000 each. All sixteen of these machines were purchased long before the issuance of the Gordon patent which came out on June 16, 1925.

Shortly after the issuance of the patent, suit was brought by the respondent against the Walcott Machine Company, manufacturer of the machines in question, in the District Court for the Eastern District of Michigan, and after trial and on July 22, 1927 Judge Simons handed down his opinion (20 F. 2d 673) correctly holding the Walcott machines to be non-infringing; an appeal from Judge Simons' decision having been taken, the Sixth Circuit Court of Appeals reversed Judge Simons in its opinion handed down *April* 12, 1929 (*Gordon v. Walcott*, 32 F. 2d 55).

When the Ford Company discontinued the manufacture of its old Model T cars and changed over to the production of the Model A Ford car in the latter part of 1927, all of the original model T camshaft shapers had been scrapped (R. 624) and replaced by the Walcott machines that were purchased in 1924.

In the latter part of 1928 and early in 1929 petitioner purchased six additional Walcott machines at a price of $5950 each (Exs. 221-222, R. 1567-73). These were pri-

marily purchased for the purpose of using them to perform a third or finishing cut upon the Model A camshafts. This third operation was contemplated because it had been found in the manufacture of the Model A camshafts during the year 1928 that an excessive amount of grinding time had been required because of the difficulties encountered in the turning of the Model A camshafts on the Walcott machines (R. 403, 625); petitioner having found from experience that greater difficulty was encountered in turning the Model A shafts on the Walcott machines than had been experienced with the Model T. These six additional machines, however, were never used for this contemplated third operation (R. 431).

(d) *RESPONDENT'S ACTIVITIES AFTER FINAL DECISION IN THE CASE OF GORDON V. WALCOTT, SUPRA*

After the Court's decision in the Walcott case, respondent sent notice of infringement to petitioner, such notice being dated June 12, 1929 (Ex. 48, R. 1684-86). The decree in the *Walcott* case was filed June 24, 1929. There being a balance due by petitioner to the Walcott Machine Company for the purchase of the six additional machines bought by it in 1929 and as all of petitioner's machines were purchased under a patent guarantee clause by the terms of which the Walcott Company agreed to hold petitioner harmless (Ex. 296, R. 1610. Of. 973, also R. 976-8, R. 1183-4), petitioner wrote the Walcott Company of the infringing notice and stated that it would expect the Walcott Company to stand back of its guarantee; petitioner also held up payment of the balance due the Walcott Company of $5926.62. On July 30, 1929, the

Walcott Company wrote a letter to petitioner, introduced in evidence in the main trial as Defendant's Exhibit 64 (R. 1696, Of. 949), requesting the payment of the balance due and stating:

> "• • • You have no doubt been informed of the plan for the purchase of the Gordon-Redlin patent which will eliminate any cost or damages to the Ford Motor Company."

After this decision of the Court respondent proceeded to file a large number of suits in the Sixth Circuit against various automotive manufacturers who were members of the then Automobile Chamber of Commerce—which had taken over the defense of respondent's suit against the Walcott Company (R. 519, 932). Since the Sixth Circuit Court of Appeals had held in the case of *Reo v. Gear Grinding*, 42 F. 2d. 965, that the assumption of the defense of a patent infringement suit by the Automobile Chamber of Commerce rendered any decision in such a suit *res judicata* against all of the members of the Chamber, settlements were made with the respondent by the automotive manufacturers. One of such settlements was made by the White Motor Company of Cleveland early in 1930 (Ex. R.R., R. 1531-43; see also Gordon R. 278-280, Jones R. 296-304, Dahl R. 512-526, Michael R. 963-969). A similar settlement was also made by the J. I. Case Company with respondent at about the same time (R. 1544-48). Another settlement was also made between the Nash Motors Company and respondent (R. 1548-1551). The Chrysler Company had also settled with respondent in the summer of 1929 (R. 1527-1530). Petitioner was not a member of the Chamber of Commerce, and was unaffected by the decree in the *Walcott* case.

After having made its settlements with Chrysler, White, Case and Nash, respondent then proceeded on to negotiate a settlement with General Motors Corporation which resulted in the agreement dated October 30, 1930, reproduced in full on pages 1552 to 1557, R. Vol. IV, under the terms of which respondent assigned to General Motors all rights of respondent in and to the patent in suit *except the right of the respondent to proceed against this petitioner;* so that at the time the suit was started by respondent against the petitioner Ford Motor Company in November, 1930, the only business of the respondent was that of the prosecution of this lawsuit. (It has never sold any machine since the patent issued.) (R. 284.)

(e) *THE SETTLEMENT BETWEEN RESPONDENT AND WALCOTT COMPANY*

In the meantime, however, respondent had entered into a compromise with the manufacturer of the machines, as found by the Court of Appeals:

> "The Gordon Company entered into a compromise settlement with the Walcott Company which had become financially involved. By the terms of the settlement the Gordon Company accepted $1.00 for all claims of infringement and waived an accounting. In an amended final decree the Walcott Company was ordered to pay the Gordon Company $4,000 costs." (R. Vol. V, 4.)

Although respondent knew of the Ford Company's use of the camshaft *shaper* for making camshafts, as its president Gordon testified he had seen them operating in 1915 and in 1920 (R. 319-20), and although the machines constructed strictly in accordance with the disclosure of the Gordon patent in suit had proven to be a complete failure for the *machining* of petitioner's cam-

shafts, as had been held by the Sixth Circuit Court of Appeals, *Gordon v. Ford*, 87 F. 2d 390, and had likewise proven to be a failure at the Jackson Motor Shaft Company and International Harvester, which found the patented machine so costly and inefficient that both returned to grinding the cams (R. 1130-1170, 1263, 1267, 1271-1299), nevertheless, respondent introduced evidence in the *Walcott* case, tried in 1927, to show that no machine, except a grinder, had been used for roughing off the cams of a camshaft and induced the Court of Appeals to hold in that case that the patentees, Gordon and Redlin, were "pioneers", and that, prior to Gordon's invention, the cams of automobile camshafts were always roughed-off by a *rough grinding* operation, as distinguished from *machining* them, so that the Court of Appeals stated:

> "Such grinding operations were expensive, dirty, and to some extent dangerous and Gordon conceived the idea of substituting a turning operation for the initial rough grinding." (32 F. 2d 55; R. 1347.)

Now to the contrary, it is shown that Ford had, prior to the patent in suit, *machined* the cams by the use of a shaper and therefore that the patented machine was not in any sense a pioneer.

Throughout the accounting proceedings in the instant litigation, respondent agreed that the prior Ford camshaft shaper was a proper standard of comparison for the machining of the Model T camshafts, yet in an effort to support a claim of approximately a million dollars, it insisted that the worst and most costly standard of comparison, viz, the grinding method (by the use of Landis grinders) should be taken for the machining of the Model A Ford and Fordson tractor camshafts (R. 20).

As to the Model A shafts the Master (R. 32), the District Court (R. 118), and the Court of Appeals (R. Vol. V, 19) in this litigation ruled against respondent's contention and accepted the *shaper* as a proper standard of comparison for both the Model T and Model A shafts but refused to accept it for the *tractor* shaft, holding that as Ford had actually used the Landis grinder for the tractor shafts, this made the grinder the sole standard for these shafts (R. 35; and Vol. V, 19), the Court of Appeals contra to the rule of *Tilghman v. Proctor*, 125 U. S. 136, erroneously stating that—

> "The predicate of the standard of comparison is that the trespasser would have used the comparative device but for his infringement • • •." (R. Vol. V, 19.)

Petitioner filed an account showing that, instead of deriving any profits, gains or advantages from the use of the infringing Walcott machines, it suffered a loss of approximately $96,000 as compared with the results of using the old shapers (R. Vol. V, 8). The difference between the Master's finding of some $86,000 savings and such loss is due largely to the fact that in the account rendered by petitioner there was included the cost of a straightening operation actually employed by petitioner when it used the Walcott lathes but which straightening operation was not employed when it used the older Ford camshaft shapers (R. 429, 436-441, 486, 500-1, 534-39, 543, 545-47, 652-56, 768-772, 1111; also Exs. M and N, 1432-1435).

In that part of his report affirmed by both the District Court and the Sixth Circuit Court of Appeals, the Master found as a fact that the straightening operation was used by the Ford Company (R. 40) but he refused to allow the extra cost of this operation, stating that petitioner *could*

have made changes in construction of the infringing machines which might have eliminated the use of the extra straightening operation (R. 41). The Court below sustained the Master's finding on this point (R. Vol. V, 20-21).

Petitioner introduced in evidence the patents to Melling Nos. 1,512,995 (Ex. 312; R. 1640-47, Of. 1171), and 1,655,655 (Ex. 209; R. 1558-66, Of. 382), and showed that the inventions thereof were embodied in the infringing Walcott machines (R. 382-84, 387-88, 1171-2). Petitioner also introduced evidence showing that the inclusion of the inventions covered by these two patents (recognized by the Patent Office to be patentably distinct over the claims of the Gordon-Redlin patent) were entirely responsible for those differences in operation between the infringing Walcott lathes which rendered them useful to and usable by petitioner (R. 782, 783, 794), whereas the patented Gordon machine was found to be unusable by, and devoid of any utility to, petitioner (87 F. 2d 390). As respondent made no effort to meet the above proofs, petitioner relying upon the many decisions of this court,* urged that respondent could not recover all of the alleged profits but only those "to which the complainant was justly entitled", and that the burden of proof rested upon respondent to apportion and prove the amount of profits attributable to the infringement (35 U.S.C.A. 70; RS. 4921). Respondent made no attempt to meet this burden but, claiming that the rule of apportionment does not apply to a case where the patent covers a unitary

---

**Mason v. Graham*, 90 U. S. 261; *Keystone v. Adams*, 151 U. S. 139; Westinghouse v. Wagner, 225 U. S. 604; *Sheldon v. Metro-Goldwyn Pictures Corp.*, 309 U. S. 390, *Dowagiac Mfg. Co. v. Minn. Moline Plow Co.*, 235 U. S. 641.

device (R. 60), it submitted no evidence on apportionment, relying solely on its legal contention that the doctrine of apportionment was not applicable here, and that therefore it was entitled to all the alleged profits (R. 69-70).

Although in the *Walcott* case, the Court below held the patent to be a pioneer, it was careful to state that the gist of the Gordon invention resided in the *means for tilting the lathe tool as the work rotated* so as to present the tool at all times on a line extending normal to the point of contact of the cutting edge of the tool with the work piece (32 F. (2d) 57, R. 1357) and in its later opinion the Court reiterated this holding and further held that the patentees were not entitled to all means for producing the desired result (87 F. (2d) 392, 1st col., R. 1364-5).

For the purpose of showing that the tilting of the tool was not essential in the operation of the infringing machines, petitioner introduced in evidence (R. 1172) the Melling patent No. 1,634,550, granted July 5, 1927 (Ex. 313, R. 1648-52, Of. 1174), in which the tool, instead of being maintained normal to the work by a tilting movement, is moved up and down in a straight-line, reciprocating path while being simultaneously moved horizontally back and forth from the work; and introduced evidence proving that a large number of lathes embodying the non-tilting tool construction of this patent was made by the Walcott Company (Ex. 314, R. 1653, Of. 1174) (without suit or even threat of suit on the patent here involved), and used extensively in the automotive industry and that by making the change from the tilting movement of the tool to the straight line movement thereof, the production of the lathes was increased (R. 1175).

The alternative amount of $120,000 awarded below as "reasonable royalty" is predicated upon the figure of $5,000 per machine for the use of twenty-four machines for but a fractional part of the life of the patent i.e. from 1924 to 1930-31 (R. Vol. V, 3 and 25). The evidence showed that although respondent sold a number of its patented machines, in no case did it ask for, or receive, a royalty for the use of the machines, but that instead all such machines were sold outright (R. 281-2)—free and unrestricted—for a lump sum selling price *which included an established royalty of* 10% *of said selling price paid to the patentee* (R. 317-18) to cover the manufacture and sale as well as the use of each patented machine so sold. Petitioner's use of the infringing machines ceased in 1931 (R. 95), whereas the patent ran until 1942.

4. SPECIFICATIONS OF ERRORS ASSIGNED AND TO BE URGED

The Court below erred:

1. In mulcting petitioner of a large sum based upon use of the machines, after respondent had settled with the manufacturer thereof for the manufacture and sale.

2. In disallowing the cost of an additional operation actually employed by petitioner in the use of the infringing machines.

3. In holding that respondent was entitled to recover all of petitioner's alleged profits resulting from the use of the infringing machines.

5. SUMMARY OF ARGUMENT

1. If a patentee, who obtains a judgment of infringement against a manufacturer who has sold infringing machines in the open market to the public, enters into a voluntary compromise with such manufacturer, the effect of which is to release such manufacturer, and at the time of such compromise the patentee has full knowledge of the use of the infringing machines by a user, he may not then proceed to recover from such user for alleged profits or damages resulting from the mere use of the machines, particularly when there was included in the sales price of all of the patented machines sold by the patentee, a royalty covering manufacture, sale and use, and when such patented machines were sold outright with no restriction upon the use thereof.

2. In determining the amount of the alleged profits made by the user of an infringing machine, the expense of using such machines must be ascertained by the manner in which the said user in fact conducted its business and not by the manner in which it might have conducted its business, and, therefore, the cost of an additional operation found to have been actually employed during the infringing use cannot be disregarded and the cost of such operation disallowed on the ground that had the user employed additional mechanism, not in fact actually employed by it, the necessity for such additional operation might have been eliminated.

3. After the Master, the District Court and the Court of Appeals all adopted concurring fact findings to the effect that the patented machine was not usable by petitioner, that the infringing machines which it did use con-

tained additional patented improvements of others and petitioner has shown these improvements were entirely responsible for the better performance of the infringing machine over the patented machine which rendered the infringing machine commercially practicable and usable by petitioner, whereas the patented machine had no utility for petitioner, the patentee-respondent is not justly entitled to recover all of the profits which resulted from the inclusion in the infringing machine of the additional patented improvements which were not the property of the patentee but of others.

6. ARGUMENT

A. *POINT 1. ON THE PROPOSITION THAT A PATENTEE AFTER MAKING A COMPROMISE AGREEMENT WITH AN INFRINGING MANUFACTURER MAY RELY UPON BIRDSELL V. SHALIOL, 112 U. S. 485, TO MULCT INNOCENT CUSTOMERS OF SUCH MANUFACTURER OF MUCH LARGER SUMS THAN ANY RECOVERY OBTAINABLE FROM THE MANUFACTURER.*

This point goes to the entire recovery (in the alternative) of both profits and damages.

(a) *Respondent suffered no damage from petitioner's use of the infringing machines and offered no proof of damage.*

It should be clearly borne in mind that although a great number of technicalities have been built up throughout the years and interjected into the practice and administration of the patent law, an action for patent infringement is fundamentally nothing but the old common law action of trespass on the case. The position of a defendant in a patent suit is that of a tort feasor (*Root v. Railway*, 105 U. S. 189). If the action is brought

at law, recovery for infringement is limited to the actual damages suffered by the plaintiff as a result of the infringement and such damages "must be proved; they are not to be presumed." *Blake v. Robertson,* 94 U. S. 728, 733. If the action is in equity, the plaintiff may, under the provisions of Sec. 4921 R. S. (35 U.S.C.A. Sec. 70), recover either damages or profits. In the instant case no proof whatsoever was presented by respondent to establish any actual damages. The facts being as they were, namely; that the plaintiff-respondent Gordon Form Lathe Company was engaged in the manufacture and sale of machines constructed strictly in accordance with the specification and drawings of the patent in suit; that respondent sold such machines outright for a purchase price which included a 10 percent royalty and placed no restriction whatsoever on the use of the machines in the hands of its purchasers, the only actual damage which respondent could have suffered from any infringement of its patent would have been either lost sales or loss of its established royalty on sales of machines that might otherwise have been made by it. It submitted no proof whatsoever of any lost sales but throughout the proceedings below rested upon the proposition (contra *Blake v. Robertson, supra*) that when infringement has been found damage will be presumed.

The petitioner was not engaged in either the manufacture or sale of the infringing machines and the charge and holding of infringement was based entirely upon the *use* by the Ford Motor Company of a number of machines which it purchased in the open market from the manufacturer thereof. (R. Vol. V, p. 5.)

Obviously any actual damage resulting from lost sales is not damage inflicted upon the patentee by the *purchaser*

of an infringing machine who merely buys the machine for the purpose of using it. The closest respondent came to make any proof whatsoever of damages was the testimony given by the respondent's President and inventor, Gordon, who, when asked why his Company did not manufacture or sell any machines after the issuance of the patent in suit, stated that "the competition we were up against with the Melling people made it so that we did not feel it would be profitable." (R. 282-3.) He was next asked whether the purchase by the petitioner of the infringing machines in 1924 had any part in contributing to the determination not to manufacture and sell, to which he replied that that was "what finally determined that we would not go ahead manufacturing any more." (R. 283). Upon cross-examination he admitted the unsatisfactory nature of his machine which had been thoroughly tried out and had so thoroughly proved a complete failure for the manufacture of the products of the Ford Motor Company. (R. 283). This, we submit, was the real reason for respondent's withdrawal of its machine from the market. There was a better machine, which instead of being an abject failure, would do the work satisfactorily.

(b) *Speculations of Master—re Damages.*

The Master in his report indulged in a pure speculation in stating that "there is no reason to suppose that if defendant and others had not infringed plaintiff's patent the plaintiff and the Walcott Company would not have reached an agreement under which the cam turning lathes with the Walcott improvements would have been supplied to the trade, with each Company sharing in the proceeds" and then stated—" • • • the *probability* exists

that defendant's infringment caused substantial damage to plaintiff, * * *." (R. 74.)

That respondent's machine was a failure in petitioner's plant is thoroughly established (*supra* p. 23). The record shows that it was given several months' trial by the Ford Company, was then taken back by the respondent to be rebuilt and reconditioned, was then returned for further trial under the direct supervision of its inventor Gordon, and still remained as complete a failure after Gordon tried for several weeks to make it do its intended job (*supra* p. 10).

The inference is, therefore, inescapable that the complete failure of the machine in the plant of the Ford Motor Company, and also in the Jackson and International Harvester plants, had more to do with the respondent's determination not to continue in any further manufacture and sale than the purchase by Ford of the infringing machines or the competition offered by the infringing Melling-Walcott machine.

Obviously petitioner can in no wise be charged with damage to respondent because of the competition of the Walcott Company. There is no basis whatsoever for the Master's conclusion that if petitioner and others had not infringed respondent's patent the respondent and the Walcott Company might have reached an agreement under which the cam turning lathes with the Walcott improvements would have been supplied to the trade with each Company sharing in the proceeds. As far as the "others" are concerned, surely petitioner is not, and cannot in any sense, be held responsible for their infringement.

(c) *The Gordon-Walcott settlement agreement.*

It is not shown that petitioner placed any impediment in the way of respondent and the Walcott Company reaching an agreement but the record establishes the contrary. When the Ford Motor Company called upon the Walcott Company to stand back of its patent guarantee clause, it was told that the Walcott Company was endeavoring to reach an agreement with the respondent (*supra p.* 12, 13). The record further establishes that after the Circuit Court of Appeals decided in the case of *Gordon Form Lathe Company v. Walcott Machine Company,* 32 F. 2d 55), to the effect that the Walcott machines infringed the patent, respondent and the Walcott Company did reach an agreement, but not the type of an agreement suggested by the Master. Instead the agreement that was reached was this, as stated by the Court of Appeals in the opinion here sought to be reviewed:

> "• • • The Gordon Company entered into a compromise agreement with the Walcott Company which had become financially involved. By the terms of the settlement the Gordon Company accepted $1.00 for all claims of infringement and waived an accounting. In an amended final decree the Walcott Company was ordered to pay the Gordon company $4000 costs." (R. Vol. V, 4.)

Just what was decided upon between the Gordon Company and the Walcott Company at the time this "compromise agreement" was entered into and the decree, prepared by counsel for respondent (R. 970), was filed in the District Court in the *Walcott* case (R. 1670-72) by the terms of which the Gordon Company accepted $1.00 for all claims of infringement and $4,000 as costs, and waived an accounting, does not appear from the record, but the record does show the Walcott Company assured

petitioner, over a month later, that there was a "plan * * * which will eliminate all cost or damage to the Ford Motor Company" (Ex. 64, R. 1696). Whatever such plan was it hardly could have been for the purpose of enabling respondent, by placing its reliance upon the case of *Birdsell v. Shaliol,* 112 U. S. 485, to claim that as it had not received full compensation for the infringing manufacture and sale by the Walcott Company it could, therefore, proceed against petitioner and mulct it under the guise of profits, of sums much larger than any recovery respondent could possibly have obtained had it pursued its lawful remedies against the Walcott Company.

We believe the oft-quoted language of Justice Bradley in the case of *Atlantic Works v. Brady* is particularly apposite here:

> "The process of development in manufacture creates a constant demand for new appliances, which the skill of ordinary head-workmen and engineers is generally adequate to devise, and which, indeed, are the natural and proper outgrowth of such development. Each step forward prepares the way for the next, and each is usually taken by spontaneous trials and attempts in a hundred different places. To grant a single party a monopoly of every slight advance made, except where the exercise of invention somewhat above ordinary mechanical or engineering skill is distinctly shown, is unjust in principle and injurious in its consequences. * * * It was never the object of those laws to grant a monopoly for every trifling device, every shadow of a shade of an idea, which would naturally and spontaneously occur to any skilled mechanic or operator in the ordinary progress of manufactures. Such an indiscriminate creation of exclusive privileges tends rather to obstruct than to stimulate invention. It creates a class of speculative schemers who make it their business to watch the advancing wave

of improvement, and gather its foam in the form of patented monopolies, which enable them to lay a heavy tax upon the industry of the country, without contributing anything to the real advancement of the art. It embarrasses the honest pursuit of business with fears and apprehensions of concealed liens and unknown liabilities to lawsuits and vexatious accountings for profits made in good faith." *Atlantic Works v. Brady* 107 U. S. 192.

Although it is true that the Court of Appeals in the case of *Gordon v. Walcott, supra,* held Gordon and Redlin to be pioneers, the Court was induced to make this holding because the facts known to respondent, the Gordon Company were not fully presented to the Court. Although respondent knew full well that its machine had proved to be a total failure in petitioner's plant, in the plant of the Jackson Motor Shaft Company and also at the International Harvester Company, and although it knew of the prior use of the shapers in petitioner's plant, it suppressed those facts and led the Court to believe that the patented machines was the first machine that had ever been used to *machine* automobile camshafts and that it had proved highly successful in actual practice.

The District Court, Judge Simons, in the main trial in the case of *Gordon v. Walcott, supra,* referred to the fact that Melling the inventor of the infringing Walcott machines, concluded after examining a patented Gordon machine that it was "wrong in principle, mode of operation and mechanism and it could not be made to work properly." The evidence here fully corroborates this conclusion (*Supra* 8). See also Ohrn R. 1138, Hajovich, 1154, 1162-1163).

Judge Simons further referred to Melling's familiarity with the old Blanchard lathe. The old Blanchard lathe was patented in 1819 and the subject matter thereof became free and open to the public upon the expiration of the Blanchard patent. The Sixth Circuit Court of Appeals in its opinion recognized that Melling's inclusion of the Blanchard principle in the infringing Walcott machines "was doubtless a patentable improvement." *Gordon v. Walcott*, 32 F 2d 55, 61.

There was introduced in evidence during the accounting proceedings a copy of the Melling patent No. 1,655,655 which covers the application of the Blanchard principle to a camshaft cutting lathe and the evidence showed that this construction admittedly was fully incorporated into the infringing machines. (R. 382-84). We also introduced in evidence the Melling patent No. 1,512,995 relating to an automatic mechanism for causing the tool to perform two cuts upon the work and with respect to which the respondent's inventor, Gordon, admitted that Melling was "smarter" than he was (R. 369, 387-388).

We further introduced (R. 1174) in evidence the Melling patent No. 1,634,550 and also the drawing Ex. 314 (R. 1653, Of. 1174) and showed that machines constructed in accordance with patent No. 1,634,550 did not employ the tilting of the tool and that substitution of tool carrying heads of the type shown in the 1,634,550 Melling patent for the tilting type heads of the machines held to infringe, did not reduce their output.

We further introduced (R. 1180) in evidence the drawing, Ex. 315 (R. 1654) of the Walcott Machine Company showing that by using a tool with a perfectly straight line reciprocation and still embodying the Blanchard prin-

ciple it is capable of producing even a greater output, the purpose of introducing Exhibits 313, 314 and 315 being to show that the tilting of the tool was not essential to the successful operation of the infringing machines.

The situation in the case at Bar, therefore, is one in which the language of Justice Bradley, quoted above is, we submit, quite apposite.

Later on Mr. Justice Brown, dealing with the same general subject matter, impresses upon us the importance of the public right that enters into the consideration of the purely personal rights of the particular litigants, in the following language:

> "It is as important to the public that competition should not be repressed by worthless patents, as that the patentee of a really valuable invention should be protected in his monopoly." *Pope Mfg. Company v. Gormully*, 144 U. S. 224, at 234, 36 L. Ed. 414, page 418.

Still later, this Court, by Mr. Justice Sutherland, again considering the great importance of the public rights involved, had the following to say:

> "We do not overlook the importance of not applying so narrowly the patent law as to discourage the inventor from exercising his creative genius, or the manufacturer or capitalist from assisting in the necessary work of bringing the invention into beneficial use; but it is no less important that the law shall not be so loosely construed and enforced as to subvert its limitations, and bring about an *undue extension of the patent monopoly against private and public rights.*" *Webster Electric Company v. Splitdorf Electrical Company*, 264 U. S. 463, 68 L. Ed. 792, p. 794. (Italics ours.)

While it may be said that the holding of the Court below to the effect that Gordon and Redlin were pioneers removes the patent from the type of so-called inventions referred to by Justice Bradley as a "trifling device" we submit that as the record now establishes the Gordon machine to have been utterly worthless not only to petitioner, but also to others, it falls within the category of the patents referred to by Justice Brown in *Pope v. Gormully* as "worthless patents." We cannot comprehend how a patent for a machine now established to be too inefficient to do petitioner's work can be a "pioneer" patent, at least as against petitioner which stands on the record here, as the real "pioneer," insofar as that appellation applies to the subject matter in controversy, i.e. *machining v. grinding* automobile camshafts. Indeed the decision of the Sixth Circuit Court of Appeals in *Gordon v. Walcott* (32 F. 2d 55) shows that the court based its holding of validity of the patent in suit on the purely functional distinction of the shape of the article being produced by the machine, as this was the *only* distinction between the Gordon machine and the machine of the Brophy patent. Brophy's machine had the bell crank lever referred to by the Court as being "of the essence of the Gordon invention," but as the Brophy machine was primarily designed to turn an elliptical contour, his master cams were of regular elliptical contour. To lay out master cams for any machine to produce a desired work piece is but the everyday work of any skilled machinist. Indeed the cams of an automobile engine camshaft are nothing but a series of eccentric arcs merged together and merging with the concentric base circle portion of the cam.

Patentability of a machine can not properly be predicated upon a mere functional recital in a claim describ-

ing the characteristics of its product as the only distinction over the prior art.

> *Carver v. Hyde*, 16 Pet. 513, 41 U. S. 513;
> *Knapp v. Morss*, 150 U. S. 221;
> *General Electric Co. v. Wabash Co.*, 304 U. S. 364, 371.

Yet that is the only distinction in the claims of the Gordon patent over the prior art.

Neither can a patentee have a valid patent drawn to a combination when the entire alleged novelty resides in but a single element of the combination when all the other elements thereof are old in the art.

> *Bassick v. Hollingshead Co.*, 298 U. S. 415, 425;
> *Lincoln Engineering Co. v. Stewart Warner Co.*, 303 U. S. 545, 549.

The situation presented to this Court is one wherein it is fully established that the Ford Company was perfectly willing to purchase the patented machine. It gave respondent every possible opportunity to demonstrate the usefulness of such machine. Respondent was perfectly willing to accept 10 percent of $4,335, or $433.50 as royalty for the full and unrestricted use by the Ford Company of such machine for the entire life of the machine and the Ford Company was perfectly ready, willing and able to pay such royalty. But the machine proved to be a complete failure. If petitioner had purchased each of the twenty-four machines which it bought from the Wal-

---

*The amount of $10,084.72 is 10% of the sum of the figures given in the second column of R. 162 under the heading "Cost" of the 24 Walcott lathes purchased by respondent.

cott Company from the respondent and had paid the 10 percent royalty thereon, the amount of the royalty payment would have been $10,084.76 (R. 162).* Yet, because the patented machine could not perform its intended function and was therefore "worthless," respondent is endeaving to collect, if its contention for an award of over $900,000 is recognized, over 9000% more than it would have received if the machine had not been worthless, and over 2000% if the award of the Sixth Circuit Court of Appeals in the judgment here sought to be reviewed is accepted. Certainly it was never the intention of the patent laws, as stated by Justice Bradley, "to embarrass the honest pursuit of business with fears and apprehensions of concealed liens and unknown liabilities to lawsuits and vexatious accountings for profits made in good faith" or to mulct petitioner of a sum many, many times more than it was perfectly willing to pay had the machine of the Gordon patent not proved to have been worthless.

(d) ***Respondent's Laches in Giving Notice.***

The tactics pursued by respondent in this case is particularly aggravated by its failure to give notice of infringement to petitioner. We have already alluded to the Master's statement of probability of petitioner's infringement causing damage to respondent (*supra*, 24). We asserted during the proceedings below and we still assert that no action of petitioner caused a single penny's worth of damage to respondent. Respondent's president and inventor, Gordon, testified that he saw the Walcott machines in the Ford Plant when he was there endeavoring so unsuccessfully to make his own machine work in the early part of 1924 (R. 368-9). Notice was not given until 1929 (Ex. 48, R. 1684, Master's Finding, R. 12).

We urge that the decision of this Court in the case of *Wine v. Enterprise*, 297 U. S. 387, in holding that under the statute a non-manufacturing patentee is not required to give notice does not apply to the situation in this case. We submit that this Court in its decision in *Wine v. Enterprise* intended to correct the situation where, as stated by the Court, "process patents and patents under which nothing has been manufactured may be secretly infringed with impunity notwithstanding injury to owners guilty of *no negligence*" (297 U. S. 395).

We submit the situation here is clearly one of laches and equitable estoppel, for as stated by the Seventh Circuit Court of Appeals in *Rome Grader & Machinery Corp. v. Adams Manufacturing Co.*, 135 F. 2d 617, 619, there must be a "balancing of equities" and "it is inequitable for a person to sleep on his rights for years and lead another to think that the latter is safe". It must be remembered that respondent's scheme to collect from petitioner depended upon the continued use by petitioner of the infringing Walcott machines. It must also be remembered that respondent has vigorously contended throughout the accounting proceedings that it was entitled to collect ¾ of 1c per cam or 6c for every one of the millions of eight-cam camshafts made by petitioner on the infringing machines so that respondent had every incentive to want petitioner to continue its use of the infringing machines.

We mention these facts first to show the monstrous inequity to petitioner that would enable respondent as a result of its scheme to release the Walcott Company from whom petitioner purchased the infringing machines in good faith in the open market and under a patent guarantee clause and meanwhile, with full knowledge of peti-

tioner's use of the infringing machines, to permit such use to continue for years without protest and then finally collect alleged profits on the production of over 8,000,000 camshafts by petitioner on the said infringing machines (R. 17).

(c) *Birdsell v. Shaliol does not apply to the situation here.*

We feel confident, as we stated above, that this Court when it handed down its opinion in *Birdsell v. Shaliol* nearly sixty years ago never intended to establish a precedent that would enable the scheme, seized upon by respondent, to be perpetuated for the future, as one having the full sanction of the patent law and the authoritative approval of this Court. In this connection we refer again to the language of Chief Justice Bradley in *Atlantic Works v. Brady, supra,* also enunciated sixty years ago, concerning "the process of development in manufacture", "the constant demand for new appliances", "the skill of ordinary head workmen and engineers" as of that time. The prodigious growth of all of these factors in the three score years which have elapsed needs no comment. When, added to this, due cognizance is taken of the fact that it is not at the present time, and was not in 1924, the practice of machine tool manufacturers to ask for, or receive, a royalty for the use of machine tools (Wibel R. 506-8, Oberhoffken R. 1110-11), and that respondent never asked for, or received, a royalty from any purchaser of its machines (R. 281-2) and, therefore, never expected to make any profits resulting from a purchaser's use but instead patentee Gordon accepted (R. 318) a royalty payment of 10 percent on all of the machines which were sold by respondent to users and which royalty covered the manufacture and sale as well as the unrestricted use thereof, it will be seen that the situation as to the facts is not at all akin to the situation present here.

The *factual situation* in the present case is much more apposite to that presented in the case of *Steam Stone Cutter v. Sheldons,* 21 Fed. 875, decided October 7, 1884 (C. C. Vt.) on exceptions to the Master's report than it is to *Birdsell v. Shaliol.* As shown in an earlier opinion by the same Court (see *Steam Stone Cutter v. Sheldons,* and others, 15 Fed. 608, C. C. Vt.), that case had to deal with a situation wherein the defendants were purchasers of machines sold by a concern known as the Windsor Manufacturing Co., which had infringed the Steam Stone Cutter Company's patents by making and selling. The Windsor Mfg. Company sold the infringing machines to its purchasers who were the defendants, with a guarantee of the right to use (15 Fed. 608). The Stone Cutter Company, the owner of the patents, had brought suit against the Windsor Company (*Steam Stone Cutter Co. v. Windsor Mfg. Co.,* 17 Blatchf. C.C. 24) and obtained a decree for recovery. It recovered some money upon that decree and "caused real estate to be set off on execution in satisfaction of the balance" (15 Fed. 608).

The title to the real estate being in litigation, the Steam Stone Cutter Company claimed it had not received full satisfaction (21 Fed. 876). In the earlier case at 15 Fed. 608, the defendant-users presented a motion for dissolution of an injunction, which motion was granted by the Court on the grounds that if satisfaction was received by the patentee from the Windsor Company, the machines in the hands of the users would be freed from the • • • monopoly (15 Fed. 609), or that further compensation could be made to the plaintiff in the accounting to be had by the plaintiff. In the case at 21 Fed., the Court held that as the Windsor Mfg. Co. had "authorized and promoted the use" the defendants and the Windsor Company were "joint tort feasors as to the use" (21 Fed. 877).

Although the case of *Birdsell v. Shaliol* has been cited for the proposition that infringing manufacture and sale of a device and infringement by use of the same article so manufactured are separate and distinct torts, the case does not in fact so hold, for this Court, after discussing the law of England with respect to judgment against "one of two tort feasors", rested its decision in the *Birdsell* case on the following stated grounds:

> "By our law, judgment against one joint trespasser, without full satisfaction, is no bar to a suit against another for the same trespass." (Citing *Lovejoy v. Murray*, 3 Wall, 1.)

As a matter of law the decision of this Court in the *Birdsell* case which rested upon the sole proposition that under this Court's own prior decision in *Lovejoy v. Murray, supra*, the release of "one joint trespasser without full satisfaction is no bar to a suit against another for the same trespass," is no longer authority for *that proposition* since the recent decision of this Court in *Tompkins v. Erie*, 304 U. S. 64, has so definitely established that in all cases, "whether local in their nature or 'general', be they commercial or a part of the law of torts" in absence of Federal Statute, the State law shall control.

Insofar as the sale by the Walcott Company to the Ford Company was concerned, it was entirely a Michigan sale, the Walcott Company being located in Jackson, Michigan, and the Ford Motor Company in Dearborn, Michigan. Likewise the compromise settlement, by the terms of which the Gordon Company accepted $1.00 as nominal damages and $4,000.00 as "costs" and waived an accounting, was also effected in Michigan.

There being no Federal law dealing directly with the question that the release of one joint tort feasor releases the others, the compromise settlement made by the Gordon Company with the Walcott Company must, therefore under the authority of *Tompkins v. Erie R. R., supra,* be construed in the light of the Michigan law. The law in Michigan on this subject is thoroughly established, the cases holding that the discharge of one tort feasor in Michigan, as a *matter of law* operates to discharge his co-tort feasor, even though the agreement to release specifically reserved the right to proceed against the other tort feasors.

In *McBride v. Scott,* 132 Mich. 176, 93 N. W. 243, wherein the question was thoroughly discussed, the Court stated—

> "We are of the opinion that the better rule is that contended for by defendants in this case, that to admit of a settlement with one tort feasor under such circumstances as are here presented, and to hold that a reservation such as is here attempted saves the right as to other tort feasors, would open the door for the plaintiff in any case to acquire by successive settlements more than just compensation; or, as is said in Brown v. Kencheloe, supra, 'The plaintiff in many instances would operate upon the fears of the defendants, and get from each full damages for the trespass committed'."

See also *Sunlin v. Skutt,* 133 Mich. 208, 94 N. W. 733, and *MacDonald v. Hornblower & Weeks,* 268 Mich. 626, 256 N. W. 572.

The language which we have quoted above from the case of *McBride v. Scott* is particularly apposite to the situation presented here wherein the action of the respondent, Gordon Form Lathe Company, in making its

compromise settlement with the Walcott Company for the stated sum of $1.00 as nominal damages, was carefully calculated to "open the door * * * to acquire by successive settlements more than just compensation." Indeed the effort proved highly successful in the collection by plaintiff of $264,521.20 (R. 962) from various automotive companies who were members of the Automobile Chamber of Commerce and who were bound by the decree in the *Walcott* case, the defense of which had been taken over by the Chamber (R. 519, 932).

It is true that since, the decision of this Court in *Birdsell v. Shaliol,* there have been many cases which hold, on its authority, that where there has been a full recovery of profits, or damages, from a manufacturer and seller of an infringing machine, such recovery does not release the same machines for re-sale or use in the hands of a purchaser and therefore the owner of the patent may proceed against subsequnt purchasers or users.

One of such cases is *Dowagiac Mfg. Co. v. Deere & Webber Co.,* 284 Fed. 331, which refers to *Steam Stone Cutter v. Sheldons, supra.* In the *Dowagiac* case the Sixth Circuit Court of Appeals also refers to the case of *Stebler v. Riverside Heights Orange Growers' Ass'n et al.,* 214 Fed. 550 (C.C.A. 9)*, and intimates that case is contra the weight of authority. In the *Stebler* case, however, the Ninth Circuit Court of Appeals, after stating the facts to be "that the plaintiff was not a user of the patented machines and that he derived his profit from his patents solely by the manufacture and by the unconditional sale direct to the users of the patented machines, could not, after final decree had been rendered against the manu-

*Application for certiorari to this Court was made in the *Stebler* case and was denied, 231 U. S. 748.

facturing infringer, sue the users of such infringing machines and that a decree against the infringer for the profits it received by reason of the sales of the infringing machines," together with whatever damages the plaintiff may have suffered by reason thereof

> "must be held to vest the right to the use of the machines in the defendant's vendees free from any further claim by the patentee." (214 Fed. 554.)

The Court (9th C.C.A.) discussed the case of *Birdsell v. Shaliol* and pointed out the distinction between the situation presented to it and that before this Court in *Birdsell v. Shaliol.* The same factual distinction exists in the case at bar.

The Sixth Circuit Court of Appeals in the *Dowagiac* case (284 Fed. 331) states there are very few cases since the decision of this Court in the *Birdsell* case which sustain the doctrine of the *Stebler* case and it discusses the cases of *Callaghan v. Myers,* 128 U. S. 617; *Kryptok Co. v. Stead Lens Co.,* 190 Fed. 767; *Philadelphia, etc., Ins. Co. v. Edison Electric Light Co.,* 65 Fed. 551; *DeLaski & Thropp v. Empire R. & T. Co.,* 239 Fed. 139. All but the *DeLaski* case involved the re-sale by retailers of the infringing devices. Recovery of the profits from the infringing manufacturer from whom the retailer purchased the infringing articles is quite a different situation from that presented here. A manufacturer who sells articles under a patent, or the owner of a copyright who sells books under a copyright, to a retailer for resale, has his market seriously impaired by re-sale of the infringing devices. Therefore, the recovery of the manufacturer's profits from the infringing manufacture is no criterion as to the damages that may result to the patentee from the re-sale by a retailer. Neither do the profits recovered

from the infringing manufacturer bear any relation to the profits realized by the infringing retailer.

In the *DeLaski* case "the plaintiff always derived its pecuniary benefit from the patent by making machines and licensing others to use them upon the payment of a royalty * * *" (239 Fed 144). The recovery of the profits of the infringing manufacturer was not, as held in the *DeLaski* case, the measure of the pecuniary loss suffered by the patentee in being deprived of its royalties for use. So all of these cases are clearly distinguishable from the *Stebler* case, *Stone Cutter v. Sheldons, supra,* and the case at bar.

In the *Dowagiac v. Deere* case, the Sixth Circuit Court of Appeals refers to the following language of this Court in *Dowagiac Mfg. Co. v. Minn. Moline Plow Co., supra,* at 235 U. S. 648:

> "As the exclusive right conferred by the patent was property and the infringement was a tortious taking of a part of that property, the normal measure of damages was the value of what was taken."

Applying this statement to the situation here, the "normal measure of damages" here and "the value of what was taken" here was, as we have heretofore shown, plaintiff's own established 10 percent royalty but that should have been recovered by respondent from the manufacturer, the Walcott Company, in the *Gordon v. Walcott* litigation. It covered *manufacture* and *sale* as well as use.

This Court in the *Dowagiac* case stated in the sentence immediately following the one above quoted:

> "So, had the plaintiff pursued a course of granting licenses to others to deal in articles embodying the invention, the established royalty could have been

> proved as indicative of the value of what was taken, and therefore as affording a basis for measuring the damages."

In the *Dowagiac* case this Court sent the case back to be re-committed to the Master for the purpose of enabling the parties to submit further evidence on apportionment (235 U. S. 650).

This Court later in *Union Tool Co. v. Wilson*, 259 U. S. 107, held that where

> "a patentee, in demanding and receiving full compensation for the wrongful use of his invention in devices made and sold by a manufacturer adopts the sales as though made by himself, and therefore, necessarily licenses the use of the devices, and frees them from the monopoly of the patent."

Unquestionably had respondent here pursued its remedy against the Walcott Company instead of releasing the latter, it could have recovered its full compensation for the wrongful use of the invention. Indeed, the Bill of Complaint in the *Walcott* case charged infringement by the manufacture, sale and use.

We direct the attention of the Court to the comparatively recent case by the Seventh Circuit Court of Appeals, *Wagner Sign Service v. Midwest News Reel Theatres*, 119 F. 2d 929. In that case, in an earlier suit brought against an infringing manufacturer, the District Court held the patent in suit valid and infringed and on appeal to the Seventh Circuit Court of Appeals a supersedeas bond was filed by the infringing manufacturer and after affirmance of the holding of validity and infringement the case was referred to a Master for an accounting. Pending the accounting, the owner of the patent, the Wagner Sign Service, Inc., procured a preliminary in-

junction against the defendant Midwest News Reel Theatres. The Seventh Circuit Court of Appeals held the injunction was improvidently granted and had the following to say concerning the effect of the decision of this Court in *Birdsell v. Shaliol*:

> "Plaintiff stresses Birdsell v. Shaliol, 112 U. S. 485, 5 S Ct., 244, 28 L. Ed. 768, as sustaining its right to injunction. This case has furnished a fertile field for much controversy in subsequent decisions by inferior courts. Oftentimes, as here, it is cited and relied upon by both sides. The most that may be said of it, so far as applicable to the instant situation, is that a patentee is not precluded from proceeding against the user of an infringing device until full compensation has been received from the infringing manufacturer and seller. No supersedeas bond was involved and, therefore, the instant question was not considered." (119 F. 2d 930.)

These comments are, we submit, quite pertinent here for no voluntary release or compromise agreement was involved in *Birdsell v. Shaliol* and the instant question was not considered. The Court points out the distinction in the cases there urged upon it by the plaintiff (and as we have hereinbefore pointed out) is that such cases were ones wherein the defendant was a retailer of the infringing articles and not a *mere user*, as here, *and as in the Stebler case.*

We submit that, upon the facts of this case, *Birdsell v. Shaliol* does not govern it, that the Master and the Court below were wrong, and that the judgment below should have been for nominal damages only.

B. *POINT 2. ON THE PROPOSITION THAT AN INFRINGER IS LIABLE FOR ACTUAL AND NOT POSSIBLE GAINS.*

(a) *The Opinions below on this Point.*

This point deals solely with the simple proposition as to whether the rule of law laid down by this Court in the case of *Tilghman v. Proctor,* 125 U. S. 136 "that an infringer is liable for actual but not possible gains" (125 U. S. 151) shall be recognized as the rule of law in the Sixth Circuit or be disregarded in that Circuit. The recovery of profits in an action in equity for patent infringement is governed by Section 4921 of Revised Statutes (35 U.S.C.A., Sec. 70). The language of the Statute as originally enacted is that "Complainant shall be entitled to recover * * * the profits to be accounted for by the defendant." As amended by the Act of Feb. 18, 1922, the following was added, *inter alia,* to the Statute—"If on the proofs it shall appear that complainant has suffered damage from the infringement or that the defendant has realized *profits therefrom to which the complainant is justly entitled* * * *." (Italics ours.) The added language to the Statute clearly defines the nature of the profits for which account must be made by any defendant, as those to which the complainant *is justly entitled.*

The entire proposition raised by the point now under discussion has to do with the failure of the tribunal below to allow, as a deduction, the costs of an additional straightening operation that was actually employed by petitioner in its use of the infringing machines but which was not employed by the petitioner in the actual use of the Ford camshaft shapers adopted as a standard of comparison.

The District Court in its opinion, on objections to the Master's report (R. 118-131) did not discuss the question of the Master's refusal to allow this additional cost. The Court of Appeals based its affirmance of the Master on this question solely on the stated grounds that

> "Every reasonable presumption is in favor of the Master's report as to profits made by an infringer based on oral testimony and his report is not to be set aside unless error clearly appears." (R. Vol. V, 20-21).

In view of this statement it behooves us to scrutinize carefully the Master's report and the evidence relating to this proposition. The Master devoted about two pages of his report to the straightening operation (R. 40-42). After stating that the difference between the loss found by petitioner from the use of the Walcott machines on the Model T shaft and the profits in excess of $40,000 claimed by the respondent, and referring to the fact that the petitioner claimed that an extra straightening operation "immediately preceding the cam operation was required with the Walcott machines which was not necessary with the shaper" he then summarized the evidence as follows:

> 1. The fact that such operation appears upon the only time study for the shapers in evidence taken in 1924 is omitted from a time study taken later in the year after the installation of the Walcott;
>
> 2. The testimony of Ford employees, supplemented by that of a representative of the Walcott Company that it was found necessary to add this operation when the Walcotts were installed;
> 3. Expert testimony that the shapers had an automatic straightening action due to the downward pressure of the shaper tools forcing the camshaft

against the subjacent steady rests, while the pressure of the Walcott tools upon a shaft floating more freely in space had no such correctional tendency. (Vol. 1 R. 40-41).

The Master then stated:

"On the other hand, independent expert witnesses testified that straightening the shaft before machining the cams was always considered the proper practice with all types of machines. Brush and Pioch, defendant's principal experts, both testified that the necessity of straightening might have been eliminated by modification of the steady rest or the addition of other steady rests."

* * * * * * *

He then stated:

"Under the testimony of its own witnesses, defendant could have made the Walcotts exactly like the shapers with regard to the necessity of straightening by simple changes with respect to steady rests, but it preferred instead to adopt the straightening operation, *which was undoubtedly the better practice.*" (R. 41.)

" * * * I therefore reject this operation as an element of the cost of using the infringing machines, *not on the ground that it was not added upon their installation* (*because I think it was*) but rather on the ground that its addition was not attributable to differences between the two machines. I recognize the rule that an infringer need account only for actual and not reasonable profits (*Tilghman v. Proctor, supra,* and many other cases) but in making a comparison between two types of machinery similar factors on both sides should be kept constant, and the actual operation of the infringing machines should not be weighed against a

theoretically ideal operation of the standard of comparison." (R. 41-42.) (Italics ours.)

The Master's summarization under (1) is entirely incorrect. Petitioner's evidence showed that this extra straightening operation was *actually* used for the Walcott machines but in fact was *not used* for the shapers was overwhelming. It was conclusive and unchallenged, and the Master found it as a fact.

(b) *The evidence on the actual use of the extra straightening operation.*

This evidence consisted of the introduction in evidence of a notebook (Ex. L) of the witness Libby, a physical exhibit not reproduced in the record but photostatic copies of certain pages of which are reproduced at R. 1429-31 as Exhibit L1 to L3 (Of. 444). The authenticity of the notebook and pages reproduced therefrom, is not questioned.

The witness Libby testified that he was a foreman in petitioner's plant at Highland Park in Department T-410, the camshaft department, at the time the Ford Company was using the camshaft shapers (R. 436-437). He identified his notebook* and stated that he copied the data appearing upon the three pages Exhibits L-1 to L-3, (R. 436-437) from a time study that was in the department at the time he was foreman (R. 439); that the notations in the notebook jibed with his personal recollection of the particular operations that were performed in that department R. 440-2). He identified the time when he copied

*See also Aptekar, who identified the Libby note both as the * * * "type of notebook we were all furnished in Highland Park.", and recognized the data as a duplicate of the model T operation sheet (R. 543-4).

this time study into his notebook by reference to other notations appearing in the book and bearing dates in April 1924 (R. 443) and testified that the copy of the time study was made by him within a period of twelve months from April 1924; that the time study was available to him and that it was a part of his regular duties as a foreman when he went into a new department to get the operation sheet, as the time studies are called, (R. 449-452) as it is essential that a foreman know the cost of the part he is making (R. 452). That he was not a time study man himself and did not carry a stop watch with him so that the only place he could possibly have obtained the data contained in Exhibits L-1 to L-3 was by the making of a copy of an existing operation sheet or time study (R. 452). He further testified he did not know of any operation change that was made in the period from 1916 to 1924 (R. 458).

For convenience, a typewritten copy of the data appearing in Libby's handwriting in Exhibits L-1 to L-3 was made on an operation sheet form employed by petitioner and was introduced (R. 463) in evidence as Ex. M (R. 1432-33) and there was also introduced as Exhibit N, an operation sheet, or time study, bearing date of October 8, 1924, at which time the infringing Walcott machines had been placed in operation and which had supplanted the original shapers. A comparison of the data tabulated in Exhibits M and N shows the following:

Operation sheet, Ex. M, lists 45 operations (R. 1433) while operation sheet N lists 46 operations (R. 1435). The operations identified as A, B, C and D and the operations identified by the numerals 1 to 11 in each of Exhibits M and N are identical in all respects. Operation 12 of Ex. N is entitled "Shape Cams" which is aptly de-

scriptive of the operation performed by the shaper in rough machining the contour of the cams of an automobile camshaft. Operation 13 of Ex. N is entitled "Turn Cam Lathe" which is just as aptly descriptive of the machining operation performed by and on the infringing Walcott machines. It is to be noted that operation 12 "Shape Cams" on Ex. M is immediately preceded by operation 11 "Rough Grind Center Bearing" which is also listed as operation 11 on Ex. N. But, by reference to Ex. N it will be seen that operation 12 "Straighten" is interposed between the "Rough Grind Center Bearing" operation 11 and the "Turn Cam Lathe" operation 13 on Ex. N. The evidence of the two operation sheets taken alone is completely decisive on this point of the actual use of the straightening operation when the infringing lathes were employed and the fact that the operation was not actually employed when the shapers were used by petitioner.

It is not in accordance therefore with the facts or the record, as stated by the Master, that the operation "appears upon the only time study for the shapers in evidence taken in 1924 and is omitted from the time study taken later in the year after the installation of the Walcotts." The reverse is true, as shown by an examination of the exhibits.

The evidence shows: that these time studies are made by time study department men in petitioner's plant; that the studies are all made with a stop watch (R. 466); that they are made for use in the accounting department for cost purposes (R. 467) and as an aid to the foreman in keeping within the costs specified within the time study; that each foreman examines the time study for the purpose of seeing whether it is all right after the

time study has been made (R. 468) and that allowances are made in the figures obtained by the stop watch studies for fatigue factors and what the witness Klopsic referred to as the "personal duties of the operator" (R. 468).

The witness Marentette, the time study man who was employed by petitioner from 1915 or 1916 up to the time his testimony was taken, compared the operations as contained in the Libby notebook (Ex. L) with the operations on Ex. N and showed his familiarity with them. He stated that operation 12 in Ex. L was performed on the type of machine known as a *"shaper"* and that operations 13 on Ex. N was performed on a Walcott *lathe* (R. 488-489) and stated that the time study reproduced in Ex. L was originally prepared by him (R. 491) as he was the only time study man at petitioner's Highland Park plant in and around 1923 or 1924 (R. 491).

In addition to the above testimony petitioner produced the witnesses Shawkey and Myers who were foremen in the camshaft department, each of whom testified that a straightening operation was required immediately before the shafts were inserted in the Walcott lathes. (R. 429, 486). The following witnesses also testified that the straightening operation was not required before the shafts were placed in the Ford shaper. Libby R. II, 441), and Oberhoffken R. 1111). In addition the following witnesses testified that the straightening operation *was required with the Walcott machine but was not required with the Shapers*: Wibel (R. 500-501); Aptekar (R. 534-539, 543, 545-47); Pioch (R. 652-56); Brush (R. 768-772).

The witnesses Aptekar, Pioch and Brush gave the physical reasons why the straightening operation was not required when the shapers were used and why it was required when the Walcott lathes were used by petitioner.

The reference of the Master to testimony of "independent expert witnesses" (unnamed) that straightening of the shaft before machining the cams was always considered the proper practice with all types of machines (R. 41) is not supported by the record as the only witness who so testified was the respondent's patentee, president and chief owner Gordon who can hardly be called independent (R. 316). The only witness called by the respondent who might have been termed an "independent expert" who testified on this point was Sloniker, an employee of Nash, who had no knowledge of petitioner's shapers (R. 310) whose deposition was taken at Milwaukee, and whose testimony that *a straightening operation was employed by Nash immediately before the shafts were put into the Walcott machines* was fully corroborative of petitioner's testimony as to the necessity of the extra straightening operation before the shafts were put into the Walcott machines (R. 311-12). The other "independent" witness called by the respondent, the witness Jones of the White Company, gave no testimony at all concerning the matter of straightening. So, while the evidence of what others did in their production is not germane to the question of what were petitioner's actual costs, there is no inconsistency that could raise a question of doubt.

(c) ***The evidence on the possibility of altering the infringing machines.***

The Master stated that petitioner's witnesses Brush and Pioch both testified the necessity of straightening could have been eliminated by modification of the steady rest in the Walcott machine or the addition of other steady rests. The testimony of the witness Pioch on this point was that the addition of the steady rests "*very likely*" could have avoided the extra straightening operation and that two more steady rests "*very likely*" could have been

added to the Walcott machine (R. 672). This is a far cry from a categorical statement that the straightening operation could have been eliminated.

The witness Brush after describing fully how the action of the shaper would tend to exert an automatic straightening of any shaft that was bowed to correct the error therein and pointing out where, as with the Walcott lathes, such action would occur, stated categorically that such action would not in any way be influenced, or modified by the number of steady rests that were used on the shaft (R. 771), and that the necessity for the straightening operation would not be modified in the slightest degree by the employment of additional steady rests (R. 772). On cross-examination Brush did, in answer to questions propounded to him by the Master, state that his testimony with respect to the necessity for straightening did not apply to a steady rest having three rollers instead of two "provided the structure of the lathe is such as you are loading and unloading and would not give you any difficulty" (R. 809). This again is a far cry from an admission that the petitioner could have eliminated the necessity for the straightening operation.

In any event, petitioner used the machines as they were supplied by, and purchased from, the maker, the Walcott Machine Company. Certainly petitioner was under no obligation to change their constructions. The testimony concerning the actual use by the petitioner of the additional straightening operation was, as we have stated, overwhelming. It was not controverted.

(d) *The physical characteristics and functioning of a shaper as compared with a lathe demonstrate the necessity for using the extra straightening operation with the latter.*

Although the Master in the portion of his report which we have quoted above, stated that petitioner could have made the Walcott exactly like the shapers with regard to the necesstiy of straightening by simple changes with respect to steady rests, this statement is not in accordance with the facts for no amount of changes in steady rests could change the cold, hard facts or the physical characteristics of the two machines. In the Ford camshaft shaper the work piece rotated very slowly, making one revolution in about 25 seconds for a Model T camshaft and would take about 29 seconds for a Model A shaft (R. 705). In the infringing Walcott machine the shaft rotated at approximately 220 revolutions per minute (R. 553). In a shaper, the instant the tools strike the work piece they tend to push the work down upon the steady rests and take out any pre-existing bow in the shaft (see Ex. 272, R. 1586; also Brush R. 769-71, Pioch R. 671, and Aptekar R. 535-6, 550-56), whereas in the lathe the cutting force of the tool is exerted along a tangent line touching the circular contour of the work at a point where the tool engages and does not tend to exert a force on the shaft in a direction such as would eliminate any pre-existing bow therein (see Ex. 273, R. 1587; also Brush R. 766-69, Aptekar R. 532-5, 556-7).

The Master not only admitted that petitioner's preference to adopt the straightening operation *"was undoubtedly the better practice"*, but he also made the direct fact finding that the straightening operation was added

upon the installation of the infringing machines, yet he gave as his reason for rejecting the cost of this operation that the additional operation was not attributable to differences between the two machines. Thus he either disregarded the uncontradicted evidence or was unable to comprehend the testimony. He then stated that he recognized the rule of *Tilghman v. Proctor, supra,* but he refused to follow the rule, and gave as an excuse for not following the rule that "the actual operation of the infringing machines should not be laid against a theoretically ideal operation of the standard of comparison." The testimony with respect to the actual use of the straightening operation by petitioner was not based upon an assumed or theoretically ideal operation, but was based upon the observation of many experienced practical shopmen who had many years experience with both the shapers and the Walcott machines under actual working conditions in petitioner's plants. The Master in refusing to allow the cost of the additional operation erred egregiously in assuming a theoretically ideal operation of the infringing machines instead of the actual operation thereof. He erred further in indulging in speculations concerning the improvements in petitioner's standard of workmanship for which there is no record support and as to why petitioner did not reject the Walcott machines instead of buying more and discarding the shapers when petitioner discovered the fact that the extra straightening operation was needed (R. 41).

We submit that such speculation cannot take the place of the record evidence and thoroughly established facts. It makes no difference what prompted petitioner not to reject the Walcott machines. The point in question must we submit be decided by the facts and in accordance with the established authoritative opinions of this Court. In the old case of *Dean v. Mason,* 61 U. S. 198, this Court

held that the rule of damages is the amount which the infringer actually realized in profits and not what he might have made by reasonable diligence. Later on in *Tilghman v. Proctor, supra,* this Court reenunciated the doctrine as follows:

> "The infringer is liable for actual, but not possible, gains. The profits, therefore, which he must account for, are not those which he might reasonably have made, but those which he did make by the use of the plaintiff's invention: * * *" (125 U. S. 146; quoted and applied 309 U. S., at page 400).

Again, after enunciating the rule as stated in *Mowry v. Whitney,* 81 U. S. 620, as to the savings and advantages for which a defendant is required by law to account, it is stated:

> "In determining that question, the expense of using the new process is doubtless to be ascertained by the manner in which the defendants have in fact conducted their business, and not by the manner in which they might have conducted it." (125 U. S. 151.)

The refusal of the Master, who, while recognizing the rule of *Tilghman v. Proctor* failed to follow it and to allow petitioner a deduction for monies actually expended by it in the use of the infringing machines, is also in direct conflict with the provisions of the Statute (R. S. 4921) which provides that a complainant may only recover those profits made by a defendant to which the complainant is justly entitled. It is also in direct conflict with the pronouncement of this Court in *Sheldon v. Metro-Goldwyn Pictures Corp.,* 309 U. S. 390, as it would mean making an award to respondent of profits that were never in fact realized and would result "not in doing equity but inflicting an unauthorized penalty" (309 U. S. 405).

Although the Court of Appeals held that the Master had found the Ford Company had used the additional straightening operation and that the labor cost thereof was in the amount claimed by the Ford Company (R. Vol. V, p. 20), it adopted his erroneous conclusions (R. Vol. V, p. 21). These conclusions were not fact findings, but conclusions of law. But even if they are to be considered as fact findings they are clearly erroneous, for it was admitted by respondent's own accountant if a straightening operation was needed in the operation of the Walcott machines and not on the shapers it should be included as a part of the cost (R. 268) and his figures for "profits" should be changed to loss (R. 270-1, 275). The Court of Appeals, like the Master, based its affirmance of the Master on presumptions (R. Vol. B, 20) and stated that the Master's report was not to be set aside unless error clearly appears.

We submit that the Master's error does clearly appear, not only error as to facts, in view of the overwhelming uncontroverted evidence, but clear error of law, and that the Court below, adopting the Master's conclusions, should be reversed.

C. *POINT 3. APPORTIONMENT*

(a) *The Opinions below.*

Just as it is with the refusal of the Master and of the Courts below to permit a deduction to petitioner for the cost of the extra straightening operation actually used in the operation of the infringing machines but not used with the shapers (the standard of comparison machine), so it is with the question of apportionment, the District Court affirmed the Master without opinion on this point. Although several pages of the Master's report are de-

voted to a long discussion of the question of apportionment (R. 60-71) and a consideration of a large number of cases dealing with the question, the Master erred in his final conclusions of law on this point, as we will point out more fully. While the Court of Appeals affirmed the Master in his refusal to apportion the alleged profits, it did not rest its affirmance on the same conclusions of law, upon which the Master based his refusal to apportion, but rested its affirmance upon the more technical grounds that the Ford Company had failed to carry its burden of proof under the decision of this Court in *Westinghouse v. Wagner*, 225 U. S. 604.

(b) *The inclusion in the infringing machines of the later patented automatic Melling two-cut mechanism.*

During the accounting proceedings before the Master, petitioner introduced in evidence Melling patent No. 1,512,995; Exhibit No. 312 (R. 1640-47, Intr. R. 1171). As will be seen by an examination of this patent (see page 1, column 1, lines 21 to 32 inclusive) it relates to the provision of automatic means in a lathe and specifically a lathe for turning camshafts whereby a roughing and a finishing cut are given the workpiece together with the provision of means for adjusting the work carriage laterally to regulate the depth of the cut.

The witness, Hunt, who testified he was in charge of the designing of the Walcott lathes purchased by petitioner, Ford Motor Company (R. 559), testified that the Walcott machines that were supplied to the Ford Company included the construction disclosed in the patent, Exhibit 312, for performing the two cuts, viz. a roughing cut and a finishing cut (R. 1171). The mechanism for automatically causing the two-cuts to be performed has

nothing whatsoever to do with the means for oscillating the cutting tool. The two-cut mechanism would be capable of employment in any lathe for the production of any type of a workpiece, irrespective of whether or not the tool is oscillated while it is performing its cutting operation. In connection with this two-cut mechanism, respondent's president and inventor, also its principal witness, Gordon, stated that one of the reasons the Walcott machine was "able to do a different job than we were, was because they took that in two cuts. They first took a rough cut and the machine automatically went back * * * and then took a second cut" (R. 369). He further admitted that as to that part of the Walcott machine, the inventor, Melling, was smarter than he was and that with respect to it, *the Walcott machine was an improvement over the Gordon patented machine* (R. 387, 388).

The patentable improvement embodied in the infringing Walcott machines and covered by the patent, Exhibit 312, was separate and distinct from the oscillating tool and the means for oscillating the tool. As the two-cut mechanism is entirely independent of the oscillation of the tool it cannot lie within the inhibited field of the Gordon patent monopoly. As to this, however, respondent urged below that as Claim 2 of the Gordon patent in suit included in it the element "means for simultaneously causing relative movement between the work holder and tool holder axially with relation to the work holder" in combination with other old and common lathe elements, this claim covered the machine in its entirety, and that therefore the later patentable improvement of the automatic two-cut mechanism invented by Melling, which is for the purpose of producing axial movement of the tool hold-

er, was covered by Claim 2, of the patent and such improvement belonged to respondent.

This argument of respondent clearly invites a holding of invalidity of Claim 2 under the rule of *Lincoln Engineering v. Stewart Warner,* 303 U. S. 545, wherein this Court held a patentee may not repatent an old combination when his invention resides in but one element thereof. Respondent, however, goes even farther. It not only claims its patent covers the entire machine, but that profits which may accrue from any patentable improvement in any element of the old combination of Claim 2 invented by others belong to it.

In addition to the above quoted last "means" clause or element in Claim 2, the claim includes (1) a rotary tool holder, i.e. a lathe chuck, (2) a tool holder, (3) a cutting tool, (4) cams, and (5) means (i.e. gears) for synchronously rotating the work holder and cams. Each and every one of these elements have been used in lathes from time immemorial, and in combination with the means for moving the tool holder axially. Yet if respondent's argument and the opinions below are sound it could recover any and all profits that would accrue to any user of any lathe that cuts work of non-circular contour even though such lathe might include a patentable improvement in every one of the five above enumerated elements and which might be wholly responsible for any of such profits.

Respondent argued below that when the patented Melling double cut mechanism was used in the infringing Walcott machines, the result was to cause the Walcott machines to perform two infringements each time they were operated instead of a single infringement. The absurdity of this argument is perhaps best illustrated by

stating that as the infringing lathes were used by petitioner for simultaneously cutting the 8 cams of an 8-cam camshaft by petitioner, each time the Walcott lathes made 2 cuts on 8 cams in finishing a camshaft, and as the means for simultaneously causing the relative axial movement between the work holder and tool holder, caused each of the 8 lathe tools in the infringing machines to traverse across the face of the cam to be machined and, as about 125 revolutions of the camshaft occurred before the tools completed one traverse across the faces of the 8 cams, then if respondent's argument is sound on the infringement occurring twice for each use of the machine, respondent could claim with equal justification that each time the infringing machines were used to finish a camshaft 8 times, 2 times 125, or 2,000 infringements occurred each time petitioner used one of the infringing Walcott machines for completing one camshaft. Surely this is a *reductio ad absurdum.*

Respondent's argument in this respect seems to have had the desired effect, insofar as the Master was concerned, for he held that as Claim 2 of the Gordon patent included the "means" element quoted above that it covered the means for doing this equally, whether one or two cuts are taken (R. 62). We shall advert to this later.

(c) *The inclusion of the valuable Blanchard principle as a patented improvement in the infringing machines.*

Petitioner also introduced in evidence as Exhibit 209, copy of the Melling patent 1,655,655 (R. 1558-66). This patent relates to the method employed in the infringing Walcott machines for tilting the tool, whereby the old Blanchard principle of operation was incorporated in the infringing machines.

Briefly, the Blanchard principle of operation was that of using a master or pattern cam which is an exact duplicate or replica of the workpiece to be produced. (The patent in suit, on the contrary, has a specially prepared master cam which is quite unlike the workpiece in form.) This is clearly shown in the Melling patent, Exhibit 209 in Fig. II thereof (R. 1559) and in Figs. VII to XI thereof (R. 1561), the part designated by the numeral 24 in each of these figures representing the master or pattern cam and the part designated by the numeral 25 representing the workpiece being cut. A cam roller or follower, 27, mounted on a suitable sliding carriage (See Fig. II, R. 1559) is held against the periphery of the master cam, 24, by suitable springs, 13. The cutting tool, 18, is mounted to oscillate upon a pivot, 16, and the distance of the point of the cutting tool, 18, from axis of the pivot axis, 16, is exactly equal to the radius of the follower roller, 27. The master camshaft, 24, and the workpiece, 25, are caused to be rotated in unison by suitable gearing mechanism and at precisely the same speed of rotation.

By reference to Figs. VII to XI, it will be seen that as the master cam, 24, is rotated in a clockwise direction, the point or line of contact between the rotating cam, 24, and the follower roller, 27, will first travel upwardly above a horizontal line passing through the axis of the roller, 27, and the axis of the pivot, 16, as the nose or projecting point of the cam moves around into contact with the surface of the follower roller, 27. The point, or line of contact, then travels downwardly until the nose of the cam lies on the said horizontal line, as indicated in Fig. VIII, and then as the nose of the cam travels below the horizontal line the point, or line of contact between, the cam and follower passes below the horizontal line. If the cutting point of the tool, 18, is made to travel upwardly and downwardly above and below the horizontal

line, passing through the axis of rotation of the follower, and the axis of oscillation of the tool and so that the cutting point of the tool will always be located on the same horizontal line as the point of contact between follower roller and the master cam, 24, the contour of the workpiece, 25, being produced will inevitably be precisely identical with, and an exact replica of the contour of the master or pattern cam. This Blanchard principle may be carried out irrespective of the diameter of the follower roller, 27, as long as the distance between the point of the tool and the axis upon which it oscillates is made equal to the radius of the follower roller. Indeed, it is not necessary that there be any oscillation whatsoever of the cutting tool because if a vertically extending perfectly plane surface is employed as the follower, the Blanchard principle may then be carried out by a straight vertical or up or down reciprocation of the tool without resorting to any tilting or oscillation of it. This identical straight line reciprocation of the Blanchard type of tool was involved in an early litigation on the Blanchard 1819 patent in the case of *Blanchard v. Eldridge*, 3 Fed. Cas. 622, wherein the straight line reciprocation resorted to by the defendant, Eldridge, was held by the court to constitute an infringement of the original old Blanchard patent.

It was with respect to the incorporation of the Blanchard principle of operation in the infringing machines, that the Court of Appeals in the case of *Gordon v. Walcott* stated—

> "Doubtless the use of the Blanchard lathe principle to produce reciprocatory movement, the use of the circular guide plate of relatively large proportions, as compared with the work, and the resulting pivoting of the tool at a point substantially removed from its point, was a valuable improvement, which perhaps was patentable as such. But

> superiority of operation does not, of necessity negative infringement." Gordon v. Walcott, 32 F. (2d) 55 at page 61, (R. 1357-1358.)

This was written before the issuance of the patent to Melling now under consideration, made the surmise of the Court a certainty.

Granting that the superior operation resulting from the use of the Blanchard principle in the infringing Walcott machines does not, as held by the Court in the above quotation, negative infringement, still this holding of the Court of Appeals in the earlier *Gordon v. Walcott* case does not form a precedent or authority for the proposition that the superiority of operation which unquestionably resulted from the use of the Blanchard principle in the infringing lathes and which was solely responsible for any profits made by petitioner caused such profits to become the property of respondent and profits which, under the statute, respondent is "*justly entitled.*"

Respondent's principal witness, its president and inventor Gordon, on cross-examination testified that he was familiar with the Melling patent (Exhibit 209), and that the structure shown in the patent is a correct representation of the Walcott machines as used by the petitioner (R. 382). He was then taken over the elements of Claim 13 of Ex. 209 (see page 4 of the patent, column 1, lines 30 to 44, R. 1565) and admitted that the infringing machine contained all of the elements set forth in the said claim and that such elements functioned as described in such claim (R. 383-384). Petitioner's expert, Brush, testified to the fact that in the infringing machines the point of the tool traversed a path that was an exact replica of the curve or circumference of the follower roller, and he too showed that the structure incorporated

in the infringing machines responded fully to the terms of Claim 13 of the patent (R. 780-781). He then testified that the operations or characteristics defined by the language of Claim 13 and as performed in the Walcott machine were *"just as different from the method of operation performed by the Gordon patent as they could be* and still have a change in the angular position of the tool" (R. 782).

It should be borne in mind that the record had already established in the main trial on validity and infringement, that the Gordon machine had failed after having been given every possible opportunity to machine petitioner's products and that the Sixth Circuit Court of Appeals in its opinion in the case of *Gordon Form Lathe Co. v. Ford Motor Co.*, 87 F. 2d 390, had held the inefficiency of the Gordon machine, rendered it of dubious practical value in petitioner's plant. This was further emphasized by the record in the accounting proceedings which established that the Jackson Motor Shaft Company and International Harvester Company had the same experience with the patented Gordon machine as petitioner and that both of these companies had rejected the machine and returned to the grinding of the cams (*supra*, 7, 10).

It having also been established that the infringing Walcott lathes had proven much more efficient than, and vastly superior to, the patented Gordon machine, the witness Brush testified as follows:

> "Q. Now will you state, whether or not, Mr. Brush, the difference in the functioning of the Melling machine, or the Walcott machine, as defined by the claims of the patent which you have just been discussing, would in any measure, be re-

sponsible, or in any measure contribute towards the more, the greater efficiency of the Melling machine as a production machine as compared with the Gordon machine?

A. Its movements as defined by the claims and as embodied in the Melling machine are wholly responsible for the greater efficiency of the Melling machine in the production of the workpiece, such as the Ford Model A cams" (R. 783).

He also testified to the same effect with respect to the Fordson cam (R. 783). He then gave his reasons for his testimony (R. 783-791). Later he testified that the proportionate increase of efficiency because of the differences between the Gordon patented machine and the Walcott machine, insofar as the operation of the two machines at petitioner's plant were concerned, was *"just 100% due to these differences* (R. 794). Respondent offered no evidence whatsoever to controvert this testimony but, as stated by the Master, it relied upon its legal contention that the doctrine of apportionment was not applicable to the case at bar (R. 69-70).

(d) *The Tilting or Oscillating Tool is not necessary or essential to the successful functioning of the infringing machines.*

Petitioner introduced (R. 1174) in evidence a third patent to Melling, No. 1,634,550 (Ex. 313, R. 1648-52) and also a blueprint of the Walcott Machine Company entitled "Assembly of New Style Parallel Tool Head" as Exhibit 314 (R. 1653). The witness Hunt testified with respect to the construction shown in the patent (Ex. 313) and the blueprint (Ex. 314) to the effect that in this type of construction the tool does not tilt to maintain a uni-

form angle normal to the work; that it was not necessary or essential in employing the Blanchard principle as it is used in the Walcott machines to tilt the tools (R. 1174), and that machines equipped with the parallel moving, non-tilting tools of Exhibit 313 produced as many shafts per hour as did the machines with the tilting tools (R. 1182). Petitioner further introduced (R. 1180) in evidence a print of the Walcott Machine Tool Company (Ex. 315, R. 1654) showing a still further improved type of tool head in which the tools have a definite straight line up and down reciprocation. This tool head also operates on the Blanchard principle and by its use, as testified to by Mr. Hunt, the machines were able to turn more cams than on the old tilting type machine (R. 1175).

As it was with the testimony of Mr. Brush so it was with the testimony of Mr. Hunt. Respondent made no effort to controvert such testimony. It establishes that there was *an alternative way open to defendant to machine its cams without utilizing the "tilting tool," which is the sole element of advance found to exist in the patent in suit.*

(e) *Analysis of the Master's Opinion on Apportionment.*

After holding, as a matter of fact, that the Gordon machine was impractical for the machining of Ford cam shafts (R. 61) that the Walcott machine had two improvements over the Gordon machine for which patents were issued subsequent to the issue of the Gordon patent in suit, the Master stated: *"It seems clear without these two improvements no savings would have been realized by defendant"* (R. 61-62).

He next stated what we submit is clearly in error, in view of the evidence as outlined above: "Without the basic Gordon idea of oscillating the tools to maintain proper cutting angles, the Walcott machine would be only an ordinary lathe." We submit the showing of Exhibits 313, 314 and 315, together with the testimony of the witness Hunt with respect thereto clearly shows the Master was in error in this conclusion. In addition to the testimony of the witness Hunt, the witness Brush also testified to the same effect, namely, that if the tool in the Walcott machine just travelled straight up and down and didn't swing at all, it would still be capable of performing its intended function and that the swinging of the tool in the Walcott machines was merely an incidental or accidental fact (R. 784-785).

The Master then refers to the cases on apportionment where the plaintiff's patent covers an improvement or covers only a part of the structure. We submit that, insofar as tilting of the lathe tool is concerned to hold it normal to the work, the Gordon patent covered a mere improvement because that was fully disclosed in the Brophy patent as discussed by the Court of Appeals in *Gordon v. Walcott*, 32 F. 2d 55, at 57 (R. 1351). The only distinction the Court of Appeals was able to seize upon between the old Brophy lathe and the Gordon lathe was that Brophy did not suggest means for cutting a so-called non-geometric form but merely an eccentric form. In other words, the court differentiated the patent of the Gordon machine from the prior art by the mere functional differences in the shape of the product being worked upon. This, we submit, is not sufficient to confer patentability (*supra*, 30-31). Even though the Court of Appeals in the *Goldon v. Walcott* case did hold the Gordon machine to be a pioneer and even though Claim 2 of the

Gordon patent by its terms may define a complete machine, the fact nevertheless remains that the Gordon invention had to do solely with the means for oscillating a lathe tool. This is but a part, and a very small part, of the entire machine. Lathes have been constructed from time immemorial with means for supporting and rotating the workpiece, for causing the tool to move to and from the workpiece, and for causing relative movement between the work-holder and tool-holder axially, provided with cams to vary the distance between the point of the tool and the axial line of the work holder and to vary the adjustment of the tool for maintaining proper cutting and clearance angles of the tool, all as set forth in Claim 2 of the Gordon patent (R. 1665, R. 1348).

After discussing numerous decided cases and referring to the two types of cases, one in which the patent covers the entire construction and the other in which the patent covers merely an improvement upon an entire construction, the Master stated "The determination of the class in which the particular case falls is not an easy matter" and "does not depend upon the language used by the patentee in his claim," citing *Egry v. Standard Register Co.*, 23 F. 2d 438 (C.C.A. 6th). Just as the Master recognized the rule of *Tighlman v. Proctor, Supra,* and refused to follow, so he, as well as the Sixth Circuit Court of Appeals refused to follow the rule of *Egry v. Standard.* A careful consideration of the Master's Report shows that he was misled by the argument of respondent into believing that the decision in this Court in *Duplate v. Triplex*, 298 U. S. 448, changed the rule with respect to apportionment of profits and that it held that the fact that the improvements were patented formed no basis for apportionment (R. 64). The *Duplate* case, however, did not deal with the question of apportionment at all but

had to do solely with an allowance or deduction claimed by the infringer in that case because patented improvements were used in the production of plate glass sheets manufactured by one of its subsidiaries and used by the infringer for completing the patented laminated "safety" glass which it sold. The claim was made by Duplate that an allowance of a reasonable royalty for the use of patented inventions employed by its subsidiary should be made and deducted from the profits. This was overruled by the Court.

The Master next discussed the rules laid down by this court in *Westinghouse v. Wagner*, 225 U. S. 604, and stated that it was difficult to distinguish the case at bar from the Westinghouse case (R. 65). He then stated that "In the case of a patented improvement which is dominated by the plaintiff's patent, the law (with respect to apportionment) *is not so clear,*" and referred to the cases upon which the respondent principally relied (R. 65). He found that the only one of them which seemed directly in point was the case of *Christensen v. National Brake and Electric Co.*, 10 F. 2d 856, a District Court case (R. 65). Reference is next made in the Master's Report to the case of *Mason v. Graham*, 90 U. S. 261. He stated that that case, if followed, *"required a decision in favor of defendant on this issue"* but the Master did not follow the rule of *Mason v. Graham*, apparently having been swayed by the respondent's argument that the *Mason* case was overruled by the *Duplate case, supra.* The Master next stated:

> "Thus, the authoritative cases seem to point to conflicting conclusions on the issue of the right to apportionment in this case, although *there is perhaps a slight edge on defendant's side of those more closely in point.*" (R. 68.)

He next discussed the question of the burden of proving apportionment and reached the conclusion that where the plaintiff's patent is for an improvement, the burden of allocating the profits between the invention and other features is on the plaintiff (R. 69). He then concluded his discussion of the subject by stating that the situation in the instant case was similar to that in the *Egry v. Standard case, supra,* wherein he stated that "the court held that the record showed no reasonable basis for apportionment. The *Egry* case was of the type involving an improvement patent so that the plaintiff was not permitted to recover any profits." But instead of following the *reasoning* of the *Egry* case (to which we earnestly direct attention) or *Mason v. Graham,* or *Tilghman v. Proctor* or *Westinghouse v. Wagner,* or *Dowagiac v. Minn. Moline Plow,* all *supra,* whose pertinence and applicability to the case at bar he recognized, he wound up his discussion of the question of apportionment with the following very unusual conclusion of law:

> "Consequently I conclude that the plaintiff is entitled to all of the profits. As between that alternative and allowing the plaintiff none, that is the fairer result." (R. 71).

(f) *Decision of the Court of Appeals*

As we have heretofore pointed out, although the Sixth Circuit Court of Appeals affirmed the Master's refusal to apportion profits, it based its refusal upon entirely different grounds than those seized upon by the Master. The Court's discussion of the question of apportionment is contained on pages 9 to 12 of Vol. V of the record. It begins its discussion with reference to the three Melling patents introduced in evidence by petitioner but its dis-

cussion of these patents is slightly garbled as it refers to patent No. 1,512,995, which is Ex. 312, as relating to a change in the method of tilting the tool in the Gordon machine. This patent does not have anything to do with the method of tilting the tool but relates entirely to the automatic two-cut mechanism, (*supra* p. 28). Neither was it in reference to this patent that the Court in *Gordon v. Walcott* stated "it was doubtless a valuable improvement" but it was with reference to the improvement covered by patent No. 1, 655,655 (Ex. 209) that this language of the Court in *Gordon v. Walcott* applies.

The Statement of the Court of Appeals (Opinion R. Vol. V) that Gordon and Redlin "taught and gave to the industry a new method for shaping camshafts which contributed substantjally to the mass production of automobiles" is simply not in accordance with the facts, for the record establishes beyond a preadventure of doubt that insofar as the machining of camshafts as distinguished from the grinding of them is concerned, it was the Ford Motor Company which was the pioneer in this regard (R. 762), the Ford camshaft *shaper* developed and used by the Ford Company as early as 1914 having been adopted and operated successfully in the mass production of millions of automobile camshafts long before the Gordon-Redlin machine had been either heard of or conceived (R. 804, 815, 1081). It is not in accordance with the fact to state that the Gordon-Redlin machine had only a moderate degree of success in shaping the camshafts of Model A cars, in the first place because it was not on the camshaft of the Model A cars that petitioner attempted to use the Gordon machine but the Fordson Tractor camshaft (R. 619) and in the second place, because it *had no success whatsoever* on such shafts but was a complete failure, not only for the Ford Com-

pany but also for the Jackson Motor Shaft Company and the International Harvester Company.

It is also not in accordance with the facts to state that Melling merely improved the Gordon machine, but it is more strictly in accordance with the facts, as found originally by Judge Simonds, to state that Melling recognized the Gordon machine was wrong in principle and that when he designed his new machine, he departed entirely from the Gordon teachings. (See Hajovich R. 1162-3). Indeed the Gordon machine was not capable of any modification, even to rebuilding, so that it could be made to work (R. 1170).

We most respectfully submit that the statement of the Court of Appeals that

> "The findings of the Master that the Ford Company enjoyed a savings from its infringement of the Gordon patent is supported by the overwhelming weight of the evidence."

is incorrect. The finding of the Master of alleged savings of $206,824.22 is not supported by the overwhelming weight of the evidence, as we have heretofore pointed out, but it is a finding that results from a clear disregard of the overwhelming weight of the evidence. This figure was found only by refusing to deduct the cost of the straightening operation, which the overwhelming weight of the evidence showed was actually employed by the Ford Company and which the Master, in contravention of the established authoritative decisions of this Court, refused to allow. This figure, moreover, is further arrived at by disregarding entirely the overwhelming weight of the evidence that any alleged advantages, or savings, attributable to petitioner's use of the infringing machines re-

sulted solely and entirely from the incorporation in the infringing machines of the added patentable improvements of Melling, which do not belong to the respondent and to which respondent is not by any means in the words of the Statute "justly entitled."

It is not in accordance with the fact to state

> "The Ford Company does not dispute the fact that it obtained substantial savings in costs through the use of the Gordon machine with the Melling improvements upon it."

The record establishes quite the contrary, for it shows that when due allowance is made for the cost of the additional straightening operation, and when the doctrine of apportionment is followed, as it should be, the Ford Company did not obtain substantial savings in costs. Moreover, petitioner consistently disputed before the Master, before the District Court, in its objections to the Master's report, and before the Court of Appeals the allegation that it made substantial savings. The Court of Appeals cites the case of *Dowagiac Mfg. Co. v. Minnesota Moline Plow Co.*, 235 U. S. 641, and points out that this case holds where profits are attributable to patentable improvements, which spring from other parts, or features, not covered by the patent, they belong to the infringer and that the burden rests on the owner of the patent to take the initiative in presenting evidence looking towards apportionment. The Court below recognized the rule of the *Dowagiac* case but refused to follow it. (R. Vol. V, 11-12).

The Court then quotes from *Westinghouse v. Wagner, supra,* referring to cases of confusion and wherein this court states:

> "On the plainest principles of justice the guilty trustee cannot take advantage of his own wrong."

The facts in the present case establish that the Ford Company was guilty of no wrong, that it gave respondent every possible chance to demonstrate the usefulness of its machine in petitioner's plant; that the machine proved to be an utter failure and that had the machine not proved to be a failure, petitioner would have purchased a battery of Gordon machines instead of purchasing the Walcott machines (R. 619).

The situation of petitioner in the instant case is not at all akin to that of the guilty trustee referred to in *Westinghouse v. Wagner*. It purchased the infringing Walcott machines in the open market in good faith and on the guarantee of the Walcott Company that the machines which it purchased would not infringe any United States or foreign patents. (Ex. 296, R. 1610). In this connection we refer the Court to the excellent discussion of the matter of apportionment by Judge Learned Hand in *Cincinnati Car Co. v. New York Rapid Transit Corp.*, 66 F. 2d 592 and wherein, in considering the *Westinghouse* case, he stated—

> " • • • That case has at times been thought to lay down a different rule, treating the infringer in all cases as a trustee *ex maleficio*, and therefore subject to the severe standard imposed upon malversators. A rigid insistence upon this would cast him for full profits in all cases except those in which by artificial and unreal distinctions courts should come to satisfy themselves that they could dissect the contribution of the prior art from that of the invention. This would be as unsatisfactory a result as that which imposed upon the patentee the same duty, and, while it might be answered that he is a victim, and the infringer a tort-feasor, the character of the tort ought not really to have

> such sanguinary results. Patent infringement often involves nice and casuistical questions which it is mere artifice to treat as involving moral delinquency." 66 F. 2d at 593.

To paraphrase: On established principles of equity and on the plainest principles of justice, petitioner here should not be placed in the position of "a guilty trustee" and "should not be subjected to the severe standard imposed upon malversators."

In view of the established facts, it would be a "mere artifice" to treat petitioner's purchase and use of the infringing machines as "involving moral delinquency."

In the instant case the Court of Appeals rested its opinion on the question of apportionment on the purely technical proposition of the burden of proof and held that the Ford Company had met its burden of showing that a portion of the profits was due to the use of the part of the machine not covered by the Gordon-Redlin device, but then stated:

> "but the Gordon Company having shown the commingling of profits by the Ford Company, and it appearing that the latter Company failed to keep records, or to supply evidence that would disclose what proportion of the profits arose from the infringing device and what proportion, if any, from the Melling improvements, the burden again returned to the Ford Company, which it has failed to carry and such failure creates an unavoidable liability." (R. Vol. V, p. 12.)

We submit the Sixth Circuit Court of Appeals in its opinion confuses the "confusion" referred to in that part of the Westinghouse decision which it quoted and which obviously relates to confusion deliberately wrought by a

knowingly guilty infringer, as distinguished from an innocent one, in order to conceal profits. That is not the situation here, because the Ford Company did supply evidence and it did keep records.

The fact that the records which it did keep did not segregate or allocate profits proportionately between the patented Gordon machine has no bearing on the matter of confusion for as found by the Master:

> "• • • *the confusion is not related to the books at all.* (R. 71.)
>
> • • • • •
>
> "• • • With respect to the question of records, defendant has a well organized accounting system, which has been shown to be as elaborate as is customary or necessary in the automotive infringing field. It does not keep costs by operations in producing parts, but such costs would be of little practical use outside of a patent accounting case like this, and the expense of keeping them would not be justified. Because of their physical bulk defendant can retain only a small portion of the records made daily in its plant; and it has developed an elaborate policy, embodied in written instructions, as to the length of time each type of record will be kept. So far as the records pertinent to this case are concerned, defendant's conduct can be summed up by saying that it followed rigidly its routine practice in keeping records, neither making any that it would not ordinarily have made nor destroying any for the express purpose of avoiding liability here." (R. 91.)

It could not conceivably have expected that throughout the years, from 1914 to 1924, when it was using the shapers, there would have been any point in attempting to keep the most meticulous records of the cost of but one

operation out of forty-five operations required to complete a camshaft. Petitioner could not possible have conceived that when the Gordon machine was in its plant on trial for some months, it should have had a corps of time keepers and accountants devoting their time to the making of a complete and meticulous record of the cost of everything which had any bearing on its operation, tool repair supervision, hourly output, percentage of scrap, etc, etc. The record evidence did show conclusively that the cost of operating the Gordon machine was prohibitive (R. 158-159, Herklotz R. 630-1).

Petitioner did keep records which disclosed the greater output on the infringing Walcott machines over the Gordon machines and it did offer evidence that the superior performance of the Walcott machines over the Gordon machines was due entirely to the added patentable improvements made by Melling over the Gordon invention (*supra*, 64). No other testimony could have been given that would have stated the true facts. Respondent was fully aware of this evidence and had every possible opportunity to meet or controvert it, but it did not offer a word of testimony to combat it. If there was any failure by any one to carry the burden of proof which rested upon him, under the authority of *Westinghouse v. Wagner* and *Dowagiac v. Minn. Moline Plow, supra,* the failure was entirely with respondent and that failure, we submit, under the authoritative decisions of this Court, places the plaintiff in a position where it cannot be awarded anything but nominal damages.

The entire situation here is best summed up first by reference to the statute, namely, that complainant in a patent infringement suit may only have awarded to him

of those profits to which "the complainant is justly entitled." The rule of *Westinghouse v. Wagner* is that

> "the owner of a small part of the fund is as much entitled to the protection of the law as the owner of a larger share. This rule is not intended to penalize the infringer nor to give the patentee profits to which he clearly is not entitled" (225 U. S. 620).

Yet the award of over $200,000 made in this case surely and clearly gives to respondent profits to which he is not entitled, and would indubitably result in penalizing petitioner out of all proportion to any damage inflicted upon respondent.

As stated by this Court in the recent case of *Sheldon v. Metro-Goldwyn Pictures Corp., supra,* profits are granted

> "in accordance with the principles governing equity jurisdiction, not to inflict punishment but to prevent an unjust enrichment by allowing injured complainants to claim that which ex aequo et bono, is there, and nothing beyond this." (309 U. S. 399.) "and that to make an award of profits which have been shown not to be due to the infringement would be * * * not to do equity but to inflict an unauthorized penalty." (309 U. S. 405.)

As the Court stated in that case when the complainant receives all the profits which have been

> "gained through the use of the infringing material * * * that is all that the statute authorizes and equity sanctions." (309 U. S. 406.)

The *Sheldon* case was a copyright case and the reference to the statute in the above quotation of course refers to the copyright statute, but a comparison of the copyright statute with the patent statute shows that the latter is more explicit in limiting the profits to be granted

to a complainant only to those to which he is "justly entitled."

CONCLUSION

The Court of Appeals in making an award of $206,824.22 to complainant of alleged profits has decided a Federal question in direct conflict with the appropriate decision of this Court in *Tilghman v. Proctor, supra,* in refusing to allow a deduction of the expense of the additional straightening operation found as a fact to have been used by petitioner. Instead of following the rule of *Tilghman v. Proctor,* which holds that the infringer is "liable for *actual, but not possible, gains,*" its decision holds the reverse as it held petitioner liable for *possible* but not *actual* gains.

By its award of the said sum it also decided a Federal question having to do with the doctrine of apportionment of profits in direct conflict with decisions of this Court in *Dowagiac Mfg. Co. v. Minn. Moline Plow Co., supra, Mason v. Graham, supra, Westinghouse v. Wagner, supra, Sheldon v. Metro-Goldwyn-Mayer, supra,* and *Marconi v. U. S., supra,* and in direct conflict with its own decision of *Egry v. Standard, supra.*

The alternative award of $120,000 based on $5,000 per machine as reasonable royalty, or more than 100% of the average cost of each of the 24 infringing machines (*supra* 31) purchased by petitioner, makes a mockery of the word "reasonable" as used in the statute. It would also inflict an "unauthorized penalty" upon petitioner, "would be not to do equity" and would result in the "unjust enrichment" of respondent who established a 10% royalty as the value for the manufacture, sale and use of the pat-

ented Gordon machines which it sold free and clear without any claim of royalty for their use. That is all respondent could in all honesty, fairness and in equity have claimed or recovered against the Walcott Company for the manufacture and sale and the subsequent *use* of the machines which the Walcott Company sold petitioner under a patent guarantee and for which respondent settled with Walcott for $1.00 nominal damages.

We submit that the entire award of profits or damages should be reversed and that the decree should be modified to direct nominal damages only.

DRURY W. COOPER,
I. JOSEPH FARLEY,

Counsel for Petitioner.

INDEX.

	Page
1. Foreword	1
2. Jurisdictional Questions	2
A. Granting of the Writ of Certiorari Under Wrong Impression	2
B. Reversal of Fact Findings of the Tribunals Below is Not Sought by Petitioner	5
3. Response to Arguments Under Heading "Statement of the Case"	6
A. The Award of One Dollar Nominal Damages in the Walcott Case	6
B. All of the Infringing Walcott Machines Used by Ford Were Within the Purview of the Compromise Agreement	6
C. The Walcott Machine Claimed to be a Gordon Machine	9
D. The Embodiment of the Gordon Invention Illustrated and Described in the Gordon Patent	10
Response to Respondent's "Argument"	12
Point 1	12
A. That Respondent is Not Entitled to Recover All of the Profits Realized by Petitioner Through Its Use of the Infringing Machines	12
B. Respondent Suffered No Damages	13
C. Findings of the Tribunals Below in re Damages	14
D. The Gordon-Walcott Compromise Agreement	16
E. The Law re Birdsell v. Shaliol	18
Conclusion	21

CASES CITED.

	Page
A. B. Dick Co. v. Marr, 48 F. Sup. 775	8
American Telephone & Telegraph Co. v. Radio Audion Co., 5 Fed. (2d) 535	13
Birdsell v. Shaliol, 112 U. S. 485	12
Blake v. Robertson, 94 U. S. 728, 733	13
Chesapeake & Ohio Ry. v. Kaltenbach, 95 F. (2d) 801, 124 F. (2d) 375	7
Dowagiac Mfg. Co. v. Deere and Webber Co., 284 F. 331	19
Gilbert v. General Motors Corp., 40 F. Supp. 525, 527.	7
Holtke v. Kemp, 80 F. (2d) 912	7
Keller v. Adams Campbell, 264 U. S. 314	3
Kelly & Koett Mfg. Co. v. McEwen, 130 F. (2d) 488	7
Machine Co. v. Murphy, 97 U. S. 120	9
McBride v. Scott, 132 Mich. 176, 93 N. W. 243	19
McDonald v. Henry Hornblower and Weeks, 268 Mich. 626, 256 N. W. 572	19
Miller v. Rudolph Wurlitzer Co., 48 F. Supp. 772, 774.	7
Pennington Engineering Co. v. Houde Engineering Corp., 43 F. Supp. 698	7
Sunlin v. Scott, 133 Mich. 208, 94 N. W. 733	19
U. S. Frumentum v. Lauhoff (C. C. A. 6), 216 Fed. 610	13
Williams Mfg. Co. v. United Shoe Machinery Corp., 316 U. S. 364	5

IN THE

Supreme Court of the United States

OCTOBER TERM, 1943.

No. 49

No. 50

FORD MOTOR COMPANY, *Petitioner,*

v.

GORDON FORM LATHE COMPANY, *Respondent.*

PETITIONER'S REPLY BRIEF.

---

1. FOREWORD.

We protest against the language used at places in Respondent's Brief, and we refer particularly to page 43, just below the middle, page 85, first 6 lines of paragraph E, and page 98, last 10 lines, all of which charges us with deliberate and knowing falsehood. Surely these have no place in an argument upon disputed evidence. As bearing upon the second of these, we call attention to what the Court of Appeals said in the appeal from the interlocutory appeal herein:

> "* * * the Gordon machine * * * did not, and could not, upon a sharp pointed cam, swing the cutting tool with sufficient speed and precision to maintain it in proper

> cutting positions on the portions immediately above and below the point, *nor could it be so reorganized as to accomplish the result while using a* single cutting tool which tilted upon its point upon a rapidly revolving workpiece." (87 Fed. (2d) at page 392, 2nd column; R. 1364)

The facts in this connection were greatly amplified by the record in the accounting proceeding so that the Master found the facts to be that

> "The Gordon machine itself was impracticable for machining the Ford camshafts." (R. 61.)

This finding of the Master was concurred in by the Court of Appeals. (133 Fed. (2d) 493.)

2. JURISDICTIONAL QUESTIONS.

A. Granting of the Writ of Certiorari Under Wrong Impression.

Under this main heading respondent's brief, under subheading (A) makes the bald statement that the "writ of certiorari was granted under a wrong impression." It implies that petitioner misled this Court in its Petition for Certiorari concerning an agreement between respondent, the Gordon Form Lathe Company and the Walcott Company, the manufacturer from whom petitioner, the Ford Motor Company, purchased the infringing machines. Reference is made to the statement contained in our main brief (p. 25) that just what was decided upon between the Gordon Company and the Walcott Company at the time the "compromise agreement" was entered into, referred to by Judge Hamilton in the opinion of the Court of Appeals in this case, does not appear from the record. We included precisely the same quotation from the opinion of the Court below, both at page 20 in our brief on petition and at page 25 of our main brief. We do not wish to recant or retract any of the statements contained in either of these briefs.

We submit that the situation before the Court in the case

of *Keller* v. *Adams Campbell,* 264 U. S. 314, from which syllabus 2 is quoted in respondent's brief (R. B. 2*), has no pertinence to the situation here presented. We believe the record shows, as we shall point out more fully hereinafter, that the amended decree as finally entered in the case of *Gordon* v. *Walcott,* R. 1670-2, was the result of an agreement and that it would not have been entered into without the voluntary consent, or agreement, of respondent. It was prepared by counsel for plaintiff, and submitted to the Court for its signature. (R. 970.)

The statement is made (R. B. 3) that the Master held

> "That the product of the infringing machine was identical, or comparable (without the straightening) with the product of the standard (the shaper) * * *"

No record reference is given, however, in support of this statement. We do not recall any such holding by the Master and are unable to find it in the Master's report. In any event, if the Master did make any such holding there is nothing tangible in the record to support it.

Respondent's brief in asserting that

> "The Gordon invention was successful in all the embodiments in which it was incorporated for the turning of non-geometric forms and that it was eminently successful in turning the kind of non-geometric form *for which it was built and adjusted* * * *"

and that as petitioner's cam was a variant it was necessary to make adjustments in the construction, conveniently neglects to make any reference to the following facts in connection with the sedulous efforts of respondent to sell the machine of the Gordon invention to petitioner:

That on July 15, 1922 petitioner ordered a patented Gordon machine (Ex. 56, R. 1043); that respondent took nearly one year in the designing and building of this machine because it was not until May 16, 1923 that the patented Gordon machine was delivered to petitioner's plant (Ex. 55,

---

* References to respondent's brief will be made as above—R.B.

R. 1690); that it remained there from May of 1923 until August 1923, a period of three months, during which time in spite of the united efforts of petitioner and respondent to make the machine do the work for which it was built, (R. 619) the machine proved to be entirely unsuccessful; that the machine was then returned to respondent, or its appointed manufacturer to permit respondent to make such "adjustments," repairs, overhauling or rebuilding as would put the machine in condition to successfully, or even properly, turn the kind of non-geometric form, viz: petitioner's camshafts, for which it was built; that the machine remained in respondent's possession, or under its direction, for a period of four months; that after it was returned to petitioner the inventor Gordon unsuccessfully devoted a period of at least three weeks (R. 286) in daily attendance at petitioner's plant doing everything in his power to make the machine perform the job for which it was not only originally built, but re-built and "adjusted."

If all that was needed, as asserted in plaintiff's brief, to make the machine of the Gordon invention successful for the turning of petitioner's cams, was to make "adjustments in the construction" (R. B. 4) surely it cannot be possible that such adjustments were beyond the ken of the "pioneer" inventor Gordon. Surely he should have been able in the eleven months which elapsed between the placing of the order for the Gordon machine by petitioner in July of 1922 and the date when the machine was delivered to petitioner on May 16, 1923, to design the machine so that it would do its intended job without even the necessity for any "adjustments to be made therein", or would have incorporated in the original machine the necessary structure to enable it to be so adjusted. Here we remark parenthetically that the mere provision of means for adjusting a mechanism is almost universally held by the courts to be within the skill of the ordinary mechanic and, therefore, lacking in invention. But, if respondent's original design for the machine that was built, constructed and, we must

assume, adjusted for the turning of petitioner's cam was faulty in either its construction or adjustment, surely ample opportunity was afforded respondent to make, not only the necessary adjustments, but to overcome any faults in the patented machine from the standpoint of poor workmanship or material. We will revert to this later. The nub of the entire situation in this respect is succinctly set forth in the statement in respondent's brief to the effect that the necessary "adjustments could only be done in the second embodiment." This is a clear-cut admission of the fact which we will hereinafter discuss more fully, that the Gordon invention, without more, and without the later patented Melling improvements, was utterly incapable of performing defendant's work and that it could not cut petitioner's sharp pointed cams nor could it be so reorganized as to accomplish the result. (*Supra* p. 2.)

Respondent's brief impliedly charges us with misrepresentations in order to induce the Court to review the question of patentability (R. B. 4), such as was sought in the case of *Williams Mfg. Co.* v. *United Shoe Machinery Corp.*, 316 U. S. 364. The questions, however, which we presented to the Court have no parallel with the Williams case as we shall show.

B. Reversal of Fact Findings of the Tribunals Below is Not Sought by Petitioner.

In none of the three questions which we presented are we asking this Court to reverse any finding of fact of the tribunals below. Instead we are asking this Court to review and reverse because the lower tribunals, while recognizing the applicable law as enunciated by this Court in many decisions, refused to apply the law to the facts established by the record and as found by such tribunals.

3. RESPONSE TO ARGUMENTS UNDER HEADING "STATEMENT OF THE CASE."

A. The Award of One Dollar Nominal Damages in the Walcott Case.

Under this heading respondent's brief charges us with having conveniently omitted reference to the one dollar award in the Walcott case as "nominal damages" and that Judge Hamilton inadvertently followed our lead in this respect. Whether the omission to refer to the one dollar award was either "convenient" or "inadvertent" is of no moment. We do not believe that any one could possibly be misled because we did not say that the award of one dollar was an award of "nominal damages" any more than he would have been misled if the award had been six cents and we had not referred to it as an award of nominal damages. The mere statement of the amount of the award—one dollar—establishes it, without more as an award merely of nominal damages.

B. All of the Infringing Walcott Machines Used by Ford Were Within the Purview of the Compromise Agreement.

The situation with respect to the sale by the Walcott Company to petitioner of eighteen of the Walcott machines in the early part of 1924 was such that under the application of the ordinary principles of equity jurisprudence respondent could have recovered from the Walcott Company for such machines had it prosecuted its case against Walcott to a conclusion instead of settling it for $1.00 nominal damages.

Gordon and Redlin filed their application for a patent on July 19, 1920. (Ex. 2, 1655 to 1669.) The patent, however, did not issue until June 16, 1925 because of the fact that it was thrown into interference with an application of *Melling, the inventor of the Walcott machines* who had seen the plaintiff's machine at the Jackson Co. (20 Fed. Rep. (2)

673.) Melling could not hope to prevail on the issue of priority of invention because he did not design his machine until after he had seen the unsatisfactory performance of the Gordon machine. Nevertheless Melling contested the interference before the Examiner of Interferences, before the Board of Examiners in Chief on appeal, and before the Court of Appeals for the District of Columbia on appeal, all which tribunals decided adversely to him. The result of Melling's protracted litigation in the interference was to delay the issuance of the Gordon patent. Whether this was done designedly or not is immaterial. The procedure, however, of provoking an interference so as to delay the issuance of a patent so that an infringer may infringe with impunity during the pendency of an application is not uncommon.

In any event, the facts are admitted that Melling got his inspiration from seeing a Gordon machine. The courts have held in many cases that where there has been a disclosure of the invention to another during the pendency of an application for a patent and an infringing appropriation of the invention, there is an implied contract to pay from the time the use of the invention began, even though a considerable period of such use occurred before the issuance of the patent. (*Holtke* v. *Kemp*, 80 F. (2d) 912; *Gilbert* v. *General Motors Corp.*, 40 F. Supp. 525, 527; *Miller* v. *Rudolph Wurlitzer Co.*, 48 F. Supp. 772, 774; *Chesapeake & Ohio Ry.* v. *Kaltenbach*, 95 F. (2d) 801, also 124 Fed. Rep. (2) 375, C. C. A. 4); *Pennington Engineering Co.* v. *Houde Engineering Corp.*, 43 F. Supp. 698.

In the latter case the court said:

> "Unless the inventor has abandoned his application, he has a property right which the courts will protect pending the granting of a patent * * *."

In *Kelly & Koett Mfg. Co.* v. *McEwen*, 130 F. 2d 488, the Court of Appeals for the Sixth Circuit said, at page 495:

> "... we think the requirements of equity will be met by charging appellant with the same royalties or profits

for machines manufactured before the patent issued as after. This is the measure of damages indicated in *Hoelke* v. *Kemp*, 4 Cir., 87 Fed. (2d) 912, a case in which disclosure was made prior to patenting. See also *Booth* v. *Stutz Motor Car Co.*, 7 Cir., 56 Fed. (2d) 962."

While it is true that each of the above cases were ones wherein there was a disclosure in confidence of an invention to the infringer during the pendency of the application, the rule may well be, and indeed should be, extended to cover infringement that occurs during a delay in the issuance of a patent enforced by the infringer in contesting an interference through successive appeals, particularly when the infringer knows full well he can not possibly prevail on the issue of priority.

As to the six machines purchased by the Ford Company in 1929 after the patent issued, it just simply is not so that no recovery could have been had for these machines in the Walcott case had respondent pursued an accounting. Recovery for infringement occurring after the filing of a bill of complaint is always permitted in any patent accounting. Indeed, the recovery has been permitted in cases where the defendant formed a new corporation after interlocutory decree to continue the infringement. *A. B. Dick Co.* v. *Marr*, 48 F. Sup. 775. Had the defendant Walcott Company attempted to resist an accounting as to machines sold after the filing of the bill of complaint in the Walcott case, the matter of enforcing recovery would have involved merely following the simple procedure of preparing and filing a supplemental complaint.

Of course no reference was made in the decree to the twenty-four Walcott machines that were sold to, and used by petitioner, in the first place because it is not the custom to recite such specific details in a decree and in the second place because any mention in the decree of these or any other of the infringing machines sold by Walcott prior to the decree would have defeated the purpose for which the

decree was entered,—to enable respondent to proceed against the users of the machines. However, sight must not be lost of the fact that respondent was placed on notice that the Walcott machines were sold to the Ford Company under a patent guarantee (R. 1184) and that when respondent waived its accounting against Walcott and accepted the $1.00 nominal damages in full settlement of its claims against Walcott, it did so with full knowledge of Ford's use of the Walcott machines and that Walcott had agreed to hold Ford harmless for any claims for patent infringement.

Respondent endeavors to make a point of the fact that it did not ask for an accounting to cover anything which had been done prior to the issuance of the patent or subsequent to the filing of the bill of complaint, and that no such accounting was ever ordered by the court. This, however, is precisely in accordance with the point we are now urging, namely, that respondent voluntarily relinquished his right to an accounting and that had respondent pursued its right to such accounting it would and could have recovered all it was justly entitled to recover. Of course, no application was made by respondent for the inclusion in the accounting either of machines made before the issuance of the patent or those made and sold after the filing of the bill when respondent voluntarily waived the accounting. But had respondent made application for an accounting instead of waiving it, there can be no doubt but that its shrewd and able counsel would not have permitted Walcott Company to escape accounting for any one of the twenty-four machines which it sold to petitioner.

C. The Walcott Machine Claimed to be a Gordon Machine.

Respondent quotes from the decision of this court in *Machine Co.* v. *Murphy*, 97 U. S. 120, and italicizes that part of the opinion which it quotes holding that:

> "Devices * * * are different in the sense of the patent law when they perform different functions in a dif-

> ferent way or produce a substantially different result''

and respondent claims that the rule should be applied here strictly. We agree. No matter what the Sixth Circuit Court of Appeals may have held in its prior opinions involving the Gordon patent, to the effect that the Walcott machine performed its functions in substantially the same way as performed by the Gordon machine, these holdings cannot change the hard physical facts, to-wit, the two machines operate on different principles—the Melling machine having incorporated therein the principle of operation disclosed in the old Blanchard patent that was issued in 1819. This principle of operation is admittedly not present in the Gordon machine. The Gordon machine was utterly incapable of producing the same result as Melling's adaptation of the Blanchard machine. The Gordon machine could not produce the result of turning a sharp pointed cam nor could it be reorganized to do so, and this was so held by the lower court as indicated on page 2, above.

D. The Embodiment of the Gordon Invention Illustrated and Described in the Gordon Patent.

Respondent's argument under this general subject seems to attempt to make a distinction between the so-called ''Gordon invention'' and what is illustrated and described in the Gordon patent. The machine which respondent built and which was especially designed over a period of many months for turning the sharp pointed Ford cam, was in all respects the same as the machine illustrated and described in the Gordon patent (R. 345-51). The slight difference in shape between the cam shown and designated by the reference character 18 in Figs. 3, 4, 6 and 7 of the Gordon patent (R. 1656, 1657) and the Ford cams, is so nearly infinitesimal as to be practically indistinguishable. The enumeration on page 16 of respondent's brief of the number of Gordon machines sold to various companies is merely the repetition

of the unsupported statements of the highly interested witness Gordon. None is now in use, nor has been for quite a number of years (p. 1191). The effort is made to make it appear that the Gordon machine was highly successful in turning pear-shaped cams. There is, however, no corroboration of Gordon concerning the success of his machine in turning even a blunt nosed pear-shaped cam. Indeed the evidence shows that the Gordon machine was not highly successful, as claimed, at Nash Motor, for the testimony of the witness Sloniker (R. 309) shows that the Nash Company was compelled to resort to an additional rough grinding in order to be able to use the product of the Gordon machine. There is no basis for attacking the opinion of the court below that "the machines did not operate satisfactorily because from 10 to 20 per cent of the camshafts turned on them were commercially unusable and there was an excessive waste or scrap in their manufacture" (R. Vol. 5, p. 3).

Respondent endeavors to make it appear that the Walcott machine is merely a different embodiment of the Gordon invention—a mere variant thereof; but neglects to refer to the fact that what it chooses to call a different embodiment, or mere variant of the Gordon machine as incorporated in the Walcott machine, was held by the Patent Office to constitute a patentable improvement over Gordon and also that the Court of Appeals in the Walcott case recognized that the incorporation of the Blanchard principle in the Walcott machine was a *valuable improvement.*

RESPONSE TO RESPONDENT'S "ARGUMENT."

Point 1.

A. That Respondent is Not Entitled to Recover All of Profits Realized by Petitioner Through Its Use of the Infringing Machines.

Respondent's brief (R. B. 21) quotes from the Master's Report (R. 82) wherein he states there is no evidence to establish that the decree for nominal damages in the Walcott case was not based upon the financial condition of the Walcott Company and wherein he indulges in speculation as to why the National Automobile Chamber of Commerce did not object to the decree, and then states that "the defense is not substantiated by the evidence." We submit the mere statement in the decree—"It being represented to the Court that the defendant is not financially able to respond to a money judgment * * * does not establish the fact that respondent could not have obtained a full recovery had it pursued its remedy. We have no way of ascertaining just what representations were made to the District Court or who made them. It does not help the matter any to speculate as to why the Chamber of Commerce did not object to the decree. The fact remains the decree was entered with the full consent and approval of respondent and its counsel. In fact, the decree was prepared by them, and by them submitted to the court (R. 970). We submit that the decision to release the Walcott Company upon the payment of nominal damages was a part of a clever scheme designed to put respondent in a position where it could, as we have heretofore stated, rely upon the case of *Birdsell* v. *Shaliol*, 112 U. S. 485, to mulct innocent purchasers of the Walcott machines of much greater sums than it could ever have obtained from the Walcott Company. This is shown further by the deliberate failure to include the Ford Company in the settlement with the other automobile manufacturers (R. pp. 1152-57).

So far as the Walcott Company was concerned, it may have jumped at the opportunity to get off with the payment of $1.00, and in the hope that it could recoup the heavy losses which it suffered as expenses in conducting its litigation against respondent. Further the inducement to the Walcott Company to agree to the settlemeint must have incorporated some promise or permission that would enable the Walcott Company to remain in the business of manufacturing the infringing machines because the record shows it was still in the business of making the infringing machines, among others, in 1939, when testimony was taken in the accounting proceedings (R. 1174).

B. Respondent Suffered No Damages.

Under this subject respondent's brief quotes from the cases of *U. S. Frumentum* v. *Lauhoff* (C. C. A. 6), 216 Fed. 610, and *American Telephone & Telegraph Co.* v. *Radio Audion Co.*, 5 Fed. (2d) 535, in support of the statement that the sufferance of damages is presumed from the infringement. It is not the law, and never has been the law, that damages in any patent infringement case are presumed. The law, without qualification, is that damages must always be proved.

Blake v. *Robertson,* 94 U. S. 728, 733.

What plaintiff calls the argument of the Court which it quotes from the *Frumentum* case does not support its statement that damage is presumed. What the Court said in the *Frumentum* case was that, and we quote and italicize—

> *"By so much as the infringing defendant supplies that market (plaintiff's) before plaintiff offers to do so, by so much is plaintiff's eventual market impaired."*

There is no proof in this case that the Ford Motor Company supplied any of respondent's market or that it impaired respondent's eventual market in any respect. Of course there could be no proof on this subject because the

Ford Company never did make and sell camshaft turning lathes. It only made and sold camshafts and the making and selling of camshafts was not a market which plaintiff ever entered nor did plaintiff ever attempt to enforce any monopoly with respect to the making of camshafts. It sold every one of its machines for the free and unrestricted use thereof and was perfectly willing to do so as long as it received a royalty of 10 percent of the purchase price for each and every machine which it sold. The quotation from the decision of the District Court in the *American Telephone* case likewise falls far short of stating that damage in any patent infringement case is presumed as the result of infringement. That case merely states that the holding of validity and infringement is conclusive upon whether or not a plaintiff has been injured. Reference to Judge Morris' decision in that case shows that he recognized clearly the difference between nominal damages and substantial damages and that he adopted in that case, the royalty which plaintiff and the owner of the patent in suit, had arrived upon as being a reasonable royalty and the amount which the infringer should pay.

C. Findings of the Tribunals Below in re Damages.

Respondent's brief states that against the finding of the suffering of damages by the tribunals below we have offered nothing but speculations and arguments. There was no direct finding by any of the tribunals below of any damage suffered by respondent. Indeed it was utterly impossible that respondent could have suffered any actual damage because of the mere use by petitioner of the infringing machines. It had tried to sell its own machines and they failed. The infringing machines were acquired for that reason. The closest the Master came to making any finding on this point was to indulge in the following speculation:

> "There is no reason to suppose that if defendant and others had not infringed plaintiff's patent the plaintiff and the Walcott Company would not have reached an agreement under which the cam turning lathes with the

> Walcott improvements would have been supplied to the trade, with each company sharing in the proceeds. Since the plaintiff's pioneer patent was primarily responsible for the value of the Walcott machine, the probability exists that defendant's infringement caused substantial damage to plaintiff, which, however, it is obviously impossible to gauge with accuracy. Thus, not only unjust enrichment by defendant, which has already been found, but the probability of substantial damages exists here." (R. 74)

If there has been any speculation on this subject it is not to be found in our discussion of it as contained in our main brief on pages 23 and 24. The Master's finding of the "probability" of damage as contained in the foregoing quotation from his report, is, however, nothing but guesswork.

The statement in plaintiff's brief that the purchase and use of the infringing machines was the "fatal blow" which put respondent out of business, coupled with the reference to the testimony of Gordon, the respondent's *alter ego* (R. 282-283) obviously is intended to direct attention to the answer to the leading question to the effect that the purchase by the Ford Motor Company of the Melling machines in 1924 finally determined that respondent would not go ahead manufacturing any more. (R. 283.) This was an obvious attempt to lay a foundation for a claim for increased damages. Nothing could be clearer from the record here that the thing which put the Gordon Company out of business was the fact that the Gordon patented machines were, to put it baldly, just simply no good and could not be made to do their intended job in spite of all the efforts made by Gordon, and other representatives of respondent, to make them perform satisfactorily. In each of the three cases of the attempted use of the Gordon machines, concerning which testimony appears in the record, the Ford Motor Company (R. 286) the Jackson Motorshaft Company (R. 1262) and International Harvester (R. 1148, 1152), respondent was compelled to send a representative on the

job of attempting to nurse the machines and make them work and in each instance the efforts of respondent's representatives were abortive. This was an expensive procedure. When we add to this the fact that the Gordon Company was losing money all of the time it was actually in business (R. 314), the "fatal blow" argument made in respondent's brief becomes exceedingly tenuous and vapid. Gordon's answer to the question immediately preceding the question at R. 283 above referred to and to the effect that it was because of the competition of the Melling people that his Company did not manufacture and sell any machines after the issuance of the patent, shows that if any further blow in addition to the commercial impracticability of the Gordon machine and the failure of respondent to conduct its business at a profit were needed to bring about respondent's demise as an operating Company, such blow was not administered by petitioner but by the Walcott Company, or as stated by Gordon—"the Melling people."

The foregoing, based solely and entirely upon the record evidence, and the consideration of ordinary human behavior, renders the effort made in respondent's brief to elicit sympathy for the "small and struggling respondent" (R. B. 24) and the reference to "larger and more powerful manufacturer" and "poor inventor" (R. B. 25) rather ridiculous. This is especially true when it is considered that plaintiff's entire case, and claim of recovery here, rests upon, and can only rest upon, the claim that the real tort feasor, the Walcott Machine Tool Cmpany, was in no better if not worse, financial straits than Gordon.

D. The Gordon-Walcott Compromise Agreement.

Respondent's brief states that the issue raised by the settlement agreement between Gordon and Walcott was never pleaded. (R. B. 30.) We admit the correctness of this statement but in answer thereto we point out that the facts in connection with such settlement agreement were not fully ascertained by petitioner until during the accounting proceedings when Michael, counsel for respondent, took the wit-

ness stand and in answer to our questions admitted that the decree in the *Walcott* case was prepared by counsel for respondent and that respondent through its counsel consented to its entry. (R. 970.) If it is essential that this issue be pleaded, petitioner submits that it may, under the provisions of Rule 15 (b) of the Rules of Civil Procedure, amend the pleadings, the Rule providing that such amendment may be made "even after judgment."

Respondent endeavors to make much of the statement as contained on page 25 of our brief that what was decided upon at the time the compromise agreement was entered into and the decree filed in the *Walcott* case "does not appear from the record." Petitioner devotes ten pages of its brief (R. B. 30 to 40) to a discussion of the agreement, which we confess we have some difficulty in following. As we understand respondent's argument it seems to be based upon the proposition that we are claiming there was some sort of an oral agreement, not of record, upon which we are basing our entire argument in support of Point 1. Either counsel for respondent are most disingenuous or very obtuse. We base our claim of a compromise agreement entirely upon the language contained in the final amended decree (R. 1670-2) and the testimony of Mr. Michael (R. 970).

Respondent argues that if there had been any such settlement agreement as petitioner contends, the Walcott Company would have advised petitioner thereof (R. B. 32, 33) when it was attempting to collect the $6,000.00 owing to it which the Ford Company was withholding. That is, of course, mere inference, and has no basis. The only agreement we contend was made, was, as appears from the decree and the subsequent activities of plaintiff, one wherein the Walcott Company was induced to be a party to the scheme which released it from all obligation except that of paying $1.00 nominal damage and $4,000.00 as "costs" so as to pave the way for respondent to collect much greater sums from the innocent purchasers and users of the Walcott machines than it could have ever recovered from Walcott. Respon-

dent by its subsequent actions clearly demonstrated that it considered petitioner, the Ford Motor Company, the pot of gold at the end of the rainbow, for Ford was not invited to join the general settlement which respondent made with the entire automotive industry except Ford and which turned over to the industry the entire right, title and interest in and to the patent in suit, reserving for itself, however, the right of action against Ford. (Ex. 71, R. 1552-57.)

Indeed the only business of respondent after it ceased making machines long before its patent issued has been that of a party litigant and its only business since the settlement with General Motors in November of 1930 has been that of conducting this particular litigation.

We have referred in our main brief (p. 13) to the letter of the Walcott Company (Ex. 64, R. 1696) dated July 30, 1929, five weeks after the entry of the amended final decree, in which the Walcott Company impliedly assured the Ford Company that Walcott was standing behind its guarantee and had planned "for the purchase of the Gordon-Redlin patent which will eliminate any cost or damages to the Ford Motor Company." Counsel for respondent volunteers the information (R. B. 38) that counsel for Walcott approached counsel for Gordon to make an agreement which, as far as we are able to understand respondent's brief, was to be in furtherance of the plan referred to in Ex. 64 but that counsel for Gordon refused to make any such agreement. Such refusal is readily understandable.

The subsequent activities of respondent utterly belie the implications that the decree which affected the compromise settlement was entered without, not only the full consent, but the hearty approbation of respondent and its counsel.

E. The Law re Birdsell v. Shaliol.

We do not attack the correctness of the decision in this court in *Birdsell* v. *Shaliol* or insofar as it enunciated a rule of law for the decision of cases in the federal courts as the law was then interpreted by this court. Respondent's brief (p. 50) refers to "the ancient and honorable doctrine" of

the Birdsell case and charges that we have visualized a hypothetical compromise agreement out of the whole cloth and hypothetical terms thereof also out of the whole cloth. It points out by reference to the Michigan cases which we cited (*McBride* v. *Scott*, 132 Mich. 176, 93 N. W. 243; *Sunlin* v. *Scott*, 133 Mich. 208, 94 N. W. 733; *McDonald* v. *Henry Hornblower and Weeks*, 268 Mich. 626, 256 N. W. 572), and by its quotation from the Hornblower and Weeks case, and also by reference to the case of *Dowagiac Mfg. Co.* v. *Deere and Webber Co.*, 284 F. 331, that the rule in Michigan and in the federal courts is no different from that in *Birdsell* v. *Shaliol*.

We are in perfect agreement with the general proposition of law that judgment against one joint tort feasor without satisfaction of such judgment does not bar suit against another for the same trespass. But we submit that a judgment for $1.00 as nominal damages and $4,000 costs entered with the full consent and approbation such as was entered into by respondent in the Walcott case presents an entirely different situation than that presented to the court in the case of *Birdsell* v. *Shaliol*, and that this situation is much more analogous to that presented to the court in the Michigan case of *McBride* v. *Scott*, *supra*.

We reiterate the argument we made in support of our petition for certiorari to the effect that this court certainly never intended its decision in *Birdsell* v. *Shaliol* to establish a precedent that would enable a patentee and infringing manufacturer to make a "deal" whereby the patentee could voluntarily consent to the entry of a judgment of $1.00 as nominal damages in furtherance of a scheme that would permit the patentee to proceed against innocent purchaser-users of the infringing machines made by the real tort feasor, and to collect huge sums as profits allegedly made by the innocent purchaser by the mere use of the infringing machines.

We reiterate that this is more particularly true when the patentee made and sold machines in exact accordance

with the patent without any restriction upon their use and when the patentee never asked for or received a royalty for use from any purchaser of its machines. The more so, where, as here, the patented machine was so impractical commercially that it would have died a natural death even if there never had been any infringement of the patent. In this connection we point out that as respondent claims repeatedly throughout its brief that the Walcott machine is a Gordon machine, the cost to any user of a Gordon-Walcott machine should not, therefore, in all fairness, be any greater than the cost to such user of a Gordon machine without any of the Walcott improvements. This cost was merely the purchase price of the machine, which purchase price had wrapped up in it a royalty of 10 per cent and which royalty the patentee was willing to accept as full compensation for the use of his patent to cover manufacture and sale, as well as use.

It is no answer to say that, as stated by the Master, the payment of this 10 per cent royalty merely amounted to the transfer of money from one pocket to another (R. 79) and, as referred to in respondent's brief (R. B. 29). It makes no difference to whom the 10 per cent royalty was paid—that was all the use of the patent cost the purchaser of a Gordon machine. But it is the fact that, at the time of making these payments, Gordon was not the *alter ego* of defendant, but a minor stockholder (R. 313). This amount petitioner was perfectly willing and able to pay, had the Gordon machine been of any value to it. Petitioner never would have bought a Gordon machine or even the infringing Walcott machines had it been asked to pay, for example, as respondent claimed throughout the entire proceedings it should pay, three-quarters of a cent for each cam turned as royalty for use. Nor would petitioner ever have agreed to pay the utterly extravagant and outrageous sum of $5,000 per machine royalty, which figure the Master snatched out of the air as a reasonable royalty to reach the alternate award of $120,000, for the twenty-four machines which pe-

titioner used for only a part of the life of the patent—5 or 6 years—e. g., from 1925 when the patent issued, until 1930-31 when the non-infringing Pioch machines were substituted. That petitioner never would have agreed to pay any such sums is exemplified by the testimony of the witness Wibel (R. 503, 506, 508) and the witness Oberhoffken, both of whom testified that it is not the practice in the machine tool industry to sell machine tools on the basis of the payment of a royalty for use of the machines (R. 1110-11). The machines here involved,—cam shaft turning lathes,—are machine tools. We believe we can say, without fear of successful contradiction, that neither Gordon nor the Walcott Company nor any other manufacturer of such machine tools could ever succeed in selling a single machine on the basis of a payment of a royalty for every workpiece made on the machine or on the basis of a royalty which represents more than 100 per cent of the fair selling price of the machine.

We think that there is no proper basis for any recovery from defendant, in view of the settlement made by plaintiff with the Walcott Co.

CONCLUSION.

As to Points II and III, on which the certiorari was granted on the rehearing, we are content to rest our argument upon our main brief, believing that it is not met by our adversary's argument which comprises pages 53 to 99 of their brief. To attempt a reply would be largely repetitious of our main argument.

We submit that our cause here is a just one and that our three points on which certiorari was granted should be sustained.

DRURY W. COOPER,
I. JOSEPH FARLEY,
Counsel for Petitioner.

INDEX.

Statement 1

Summary of the Matter Involved 4

Jurisdiction 9

Petitioner's Questions Presented 9

Argument 12

Point (1): Respondent made no "compromise agreement" or "deal" with Walcott Machine Company, the infringing manufacturer 12

Point (2): The Master resolved the issue of fact on the "straightening operation" against petitioner; and the District Court and the Circuit Court of Appeals approved and accepted the Master's finding 16

Point (3): The Master resolved the fact issue of apportionment against petitioner; and the District Court and the Court of Appeals approved and accepted this finding 18

Point (4): Melling's patent 1,634,550 infringed Gordon 21

Point (5): Petitioner unlawfully used Gordon's invention 22

Point (6): The respondent effected and retained considerable overhead savings by reason of the use of the infringing machines 24

Point (7): The Master found damages of the respondent, by way of reasonable royalty, in the sum of $120,000, which finding was concurred in by the District Court and the Court of Appeals 29

Conclusion 31

TABLE OF AUTHORITIES.

Cases.

Adamson v. Gilliland, 242 U. S. 350 4

A. T. & T. v. Radio, 5 Fed. (2) 535 11

Bigelow v. Old Dominion Copper Co., 225 U. S. 111 (1912) 9, 15

Birdsell v. Shaliol, 112 U. S. 485 (1884) 10, 15

Christensen v. National Brake and Electric Co., 10 F. (2d) 856 19

Corsicana Nat. Bank v. Johnson, 251 U. S. 68 10

Dowagiac v. Deere & Webber, 284 Fed. 331 (C. C. A. 8) 12

Dowagiac Mfg. Co. v. Minnesota Moline Plow Company, 235 U. S. 641 20-21

Duplate Corp. v. Triplex Safety Glass Co., 298 U. S. 448 .....8, 28

Elizabeth v. Pavement Co., 97 U. S. 126 17

Exhibit Supply Co. v. Ace Patents Corp., 315 U. S. 126 9

Flat Slab Patents Co. v. Turner, 285 Fed. 257 19

General Pictures v. Electric, 304 U. S. 175 3

Gordon Form Lathe Co. v. Walcott Machine Co., 32 F. 2d 55 (1929) 5, 6, 12, 13, 14, 22

Hildreth v. Mastoras, 257 U. S. 27 10

Keller v. Adams, 264 U. S. 311 2

Layne and Bowler Corporation v. Western Well Works, 261 U. S. 387 ..... 2, 3

Lincoln Engineering v. Stewart Warner Corp., 303 U. S. 546 9

Lovejoy v. Murray, 3 Wall. 1 .....10, 15

Machine Co. v. Murphy, 97 U. S. 120 22

Mason v. Graham, 90 U. S. 261 .....20, 21

Melling v. Gordon Form Lathe Co., 14 F. 2d 437 5
Mishawaka Rubber & Woolen Mfg. Co. v. Kresge Co., 316 U. S. 203 9
Morton Salt Co. v. G. S. Suppiger, 314 U. S. 488 9
Muncie Gear Workers v. Outboard Marine & Mfg. Co., 315 U. S. 759 9
Sessions v. Johnson, 95 U. S. 347 10
Sheldon v. Metro-Goldwyn Corp., 309 U. S. 390 21
The Suffolk Mfg. Co. v. Hayden, 3 Wall. 315 12
Tilghman v. Proctor, 125 U. S. 136 (1888) 17
Timolat v. Franklyn, 122 Fed. 69 (C. C. A. 2) 6
Tuttle v. Claflin, 76 Fed. 227 19
U. S. Frumentum v. Lauhoff, 216 Fed. 610 (C. C. A. 6) .11-12
U. S. v. Societe, 224 U. S. 309 .....11, 21
Westinghouse Co. v. Wagner Mfg. Co., 225 U. S. 604..18, 21
Winans v. Denmead, 15 How. 330 11

Rules and Statutes.

Federal Rules of Civil Procedure (28 U. S. C. A., foll. Sec. 723c):
Rule 8(c) 9
Rule 52 4
Rule 52(a) 31
Rule 53(e) (2) 22, 28, 31
Rule 75(d) 14
R. S. 4884 (35 U. S. C. A. 40) 10
R. S. 4921 (35 U. S. C. A. 70) 10, 12

In the Supreme Court of the United States

OCTOBER TERM, 1942.

Nos. 945, 946.

FORD MOTOR COMPANY,
Petitioner,

vs.

THE GORDON FORM LATHE COMPANY,
Respondent.

BRIEF OF RESPONDENT, THE GORDON FORM LATHE COMPANY, In Opposition to the Petition for a Writ of Certiorari of The Ford Motor Company.

Statement: The Court of Appeals for the Sixth Circuit affirmed the findings and conclusions of the Special Master on the accounting in all respects (133 Fed. (2) 487; R. Vol. V, pp. 2-26). The District Court adopted the findings and conclusions of the Report of the Master on the profits and damages following the judgment against the petitioner here, for the infringement of a patent owned by respondent, The Gordon Form Lathe Company, in all respects except one. The infringement in this case was colossal. It extended from June 16, 1925 to March of 1931. During that period of time the defendant turned on the infringing machines 3,420,166 T model camshafts, 4,306,504 A model camshafts, and 275,664 tractor camshafts. There were 8 cams on each shaft, making a total of 8,002,334 camshafts turned. The Master found that the defendant's profits on this infringement amounted to $206,824.22 (T. R.

93). The District Court eliminated the overhead item from these profits. The Circuit Court of Appeals affirmed the Master's findings in all respects and stated (133 F. 2d 493):

> "The finding of the Master that the Ford Company enjoyed a savings from its infringement of the Gordon patent is supported by the overwhelming weight of the evidence."

The petitioner seeks a review of many points in which the Master, the District Court and the Court of Appeals have been in agreement. The respondent opposes the petition on each of the grounds advanced by the petitioner.

The respondent respectfully points out the reasons why, in its opinion, the present petition should be denied:

1. There is no diversity of decision between the Courts of Appeals below on any of the questions presented in this petition. *Keller v. Adams*, 264 U. S. 311, 314; *Layne v. Western Well*, 261 U. S. 387, 393.

3. There is uniformity of decision with the prior decisions of this Court and with the prior decisions of the Circuit Courts of Appeals following such decisions on the questions presented by this petition.

3. There is no diversity of decision between the Circuit Court of Appeals in the Sixth Circuit and the Special Master who heard and saw the witnesses. On the contrary the two are in accord.

4. No question of public interest is involved; petitioner shows no other case in which any of the alleged questions are involved. On this record the interest is limited to the litigants.

5. This is the last of the suits on this patent; the patent is expired; everybody but this defendant settled after the first case. The litigation having reached the accounting phase is no longer subject to the rules governing patents and the litigation and the questions here involved

are therefore not confined to one circuit as in the *Schriber-Schroth* case.

6. Several of the questions presented to this Court were belatedly brought into the case by petitioner.

7. The specific questions presented to this Court were all ruled upon by each of the courts below.

While this Court undoubtedly has jurisdiction and the right to grant Petitions for Certiorari, this Court has said that it would not take up cases to settle principles important to the parties but unimportant to the public. Thus in *Layne and Bowler Corporation v. Western Well Works*, 261 U. S. 387, the Court said (p. 393):

> "If it be suggested that as much effort and time as we have given to the consideration of the alleged conflict would have enabled us to dispose of the case before us on the merits, the answer is that it is very important that we be consistent in not granting the writ of certiorari except in cases involving principles the settlement of which is of importance to the public as distinguished from that of the parties, and in cases where there is a real and embarrassing conflict of opinion and authority between the circuit courts of appeal."

This Court has also said that it would not grant certiorari to review concurring decisions below. The Special Master and the Circuit Court of Appeals concurred in every finding and every conclusion, and the District Court adopted all of the findings and conclusions of the Special Master except one. All but one of the points made by petitioner insofar as they were presented to the Courts below are from findings and conclusions each of which are concurring in all respects. In *General Pictures v. Electric*, 304 U. S. 175 this Court said (pp. 178-179):

> "Moreover, the decision on that point rests on concurrent findings. They are not to be disturbed unless plainly without support. *United States v. Chemical Foundation*, 272 U. S. 1, 14. *United States v. Mc-*

Gowan, 290 U. S. 592. *Alabama Power Co. v. Ickes,* 302 U. S. 464. There is evidence to support them. Nor would the writ be granted to review the questions of anticipation and invention that petitioner argues, for as to them there is no conflict between decisions of circuit courts of appeals. *Layne & Bowler Corp. v. Western Well Works,* 261 U. S. 387, 393. *Keller v. Adams-Campbell Co.,* 264 U. S. 314, 319-320. Cf. *Stilz v. United States,* 269 U. S. 144, 147-148."

The rule of respect for concurring decisions of courts below and (the special master who saw and heard the witnesses) announced a long time ago by this Court in *Adamson v. Gilliland,* 242 U. S. 350 has now been given the force of law under Rule 52 of the Federal Rules of Civil Procedure.

Summary of the Matter Involved: Petitioner's statement (pages 2-9 of the petition) of the prior litigation of the patent is generally correct although incomplete and colored with self-serving statements and partisanship.

The following statement is made to briefly supplement the statement of petitioner. During this period several other suits were begun for infringement of the patent, these were settled by agreement of the parties. Almost the entire automobile industry adopted and began using the Gordon invention as soon as its value became known. There was an abandonment of the prior methods and machines used to cut cams on the automobile engine cam shafts. The cam shafts in question are those that open and close the exhaust and intake valves of the engine and the cams are positioned so that each valve will open in timed relation to the piston within the engine cylinder and in proper sequence with the valves in the other cylinders. The machines of the invention cut all of the cams on the camshaft in a simultaneous cutting operation. With the exception of the petitioner the automobile industry recognized the value of the invention by requesting licenses to use the invention.

On pages 5 and 6 of the petition, petitioner incorrectly says respondent kept from the court information concerning the petitioner's use of the camshaft shaper for making camshafts; and petitioner concludes that because of this fact the Circuit Court of Appeals held the patent to be a pioneer patent (32 F. 2d 55). The fact is that the Ford camshaper was referred to in the first litigation under the Gordon patent (*Melling v. Gordon Form Lathe Co.*, 14 F. 2d 437) to all of which the attention of defendant has been frequently called and is therefore well known to defendant. In that suit proof was offered concerning that Ford camshaper and how it worked. This testimony was read into the record in the instant case (T. R. 292-296). That testimony was given in 1926. The fact is also that others engaged in the industry knew that the Ford Company was using Ford camshapers (T. R. 303) and Jones, of the White Motor Company, saw them in operation in the Ford plant in 1926 (T. R. 301). When the instant case was tried on the merits, the Ford camshaper and its operations were described at length; and the court below in sustaining Gordon's patent stated (87 F. 2d 390, 391):

> "Even brief discussion of all the asserted new prior art in the present record would unduly extend this opinion. Full consideration thereof brings conviction of its insufficiency to warrant modification of our previous conclusion that the patentees were pioneers in disclosing means for oscillating the tool in synchronism with its reciprocatory movements and the revolution of the work by the use of an appropriately shaped cam, moveable frame, and bell crank lever tool support for use in cutting nongeometric forms and that the Walcott machine is an infringement."

The petitioner implies (page 6) that there was undue delay in starting this suit. The patent in suit issued June 16, 1925. The *Gordon v. Walcott* suit was begun in July, 1926 just a little over one year later, for infringement of

the patent in suit. The *Walcott* suit was decided by the Sixth Circuit Court of Appeals, April 12, 1929. Without including the time allotted for a writ of certiorari, the present suit was begun in about one and one-half years. The *Walcott* suit was a test case for respondent. The law has been firmly settled that the prosecution of a test suit is a proper defense against the charge of laches. As stated by Judge La Combe in *Timolat v. Franklyn,* 122 Fed. 69 (C. C. A. 2) at page 69:

> "They were under no obligation to sue everyone at the same time."

The decision of the Circuit Court of Appeals sustaining the Gordon patent as against Melling (*Gordon Form Lathe Co. v. Walcott Machine Co.,* 32 F. 2d 55) was handed down April 12, 1929. On June 12, 1929, Gordon forwarded a copy of that decision to the Ford Motor Company (T. R. 1684-1686), calling defendant's attention to its infringement, and prior notice of infringement to defendant given under date of July 1, 1925, and offering to settle with defendant. Before this action was commenced Gordon wired Ford (T. R. 1525) with respect to commencement of an action, and proposing a conference with Ford's attorneys to discuss possibilities of settlement. On this issue the Master found (T. R. 82):

> "However, by and large, the plaintiff has taken the normal course in enforcing its patent rights. It first sued the manufacturer of the infringing machines and, after getting a decree against it, sued the user of the machines."

The lower courts and the Master were in agreement on the standard of comparison and petitioner complains (page 6) because they all approved the Landis grinder as a standard of comparison on tractor cam shafts prior to the machine of the patent.

In its plant before the infringement, the petitioner had two cam cutting machines more successful than the rest,

the Landis grinder and the Ford shaper. It used the shaper in making the model T camshafts and the Master ruled, that it could have been adapted to the Model A shafts, which were not made until after the beginning of the infringement. Accordingly the Master held the shaper a proper standard of comparison for the Model A shafts. While the petitioner had both the shaper and the Landis grinder in its plant, it chose the Landis grinder to cut the tractor cam shafts. It urges here that the shaper is the proper standard of comparison despite the fact that when it was confronted with a choice it chose the Landis grinder. A company as successful as petitioner never used an inferior machine when a better one was available. There is a sound basis for the ruling of the Master, adopted and affirmed by the courts that the Landis grinder was the proper standard of comparison for the tractor camshafts.

The Master's finding on this specific question (T. R. 35) is to the effect that while the modified shaper was feasible for the tremendous Model A production of the defendant, the defendant's own witnesses testified that at no time did tractor production become great enough or its future sufficiently certain to justify the construction of a special shaper for them. The Master points out that a good deal of work beyond Oberhofken's rough sketches would have been necessary before blue-prints could have been completed and the machines ordered; and that these machines would no doubt have been considerably more expensive than the Model T shapers and it would have been difficult to find a use for them if tractor production were discontinued, since the shaper is inherently not an adaptable type of machine.

The straightening operation (page 7) resolves itself into a question of fact. The Master said on page 41 of the record:

> "independent expert witnesses testified that straightening the shaft before machining the cams was always

considered the proper practice with all types of machine * * *. Furthermore, it appears that the standard of workmanship was raised from time to time; * * *.

The conclusions I draw from this and other evidence not detailed here is that while the use of the Walcott lathes may have been the occasion for adding the straightening operation it was not the underlying cause for doing so, the operation being rather attributable to improvement in defendant's standards of workmanship."

On questions of fact, the Master should be affirmed, especially where both sides presented so much evidence on the question. As was stated by Mr. Justice Cardozo in *Duplate v. Triplex,* 298 U. S. 448, 450:

> "The finding by the Master in that regard was approved by the District Court and later by the Court of Appeals. It will be accepted as a datum here."

Petitioner complains on pp. 7 and 8 that no apportionment was granted to it in this case. The Master found that defendant's evidence on this issue consisted wholly of expert testimony to the effect that 100% of the value of the infringing machine was attributable to the Melling improvements (T. R. 70). The Master's finding denying apportionment was concurred in by the District Court and the Circuit Court of Appeals. The Circuit Court of Appeals stated (133 F. 2d 494):

> "But the Gordon Company having shown the commingling of profits by the Ford Company, and it appearing that the latter company failed to keep records or to supply evidence that would disclose what proportion of the profits arose from the infringing devices and what proportion, if any, from Melling's improvements, the burden again returned to the Ford Company, which it has failed to carry, and such failure creates an unavoidable liability."

The petitioner seeks the benefits and advantages received by the licensees (page 9) where it says the reasonably royalty is too high. It does not say that it was aware of the licenses at the time they were made and that this petitioner stood mute.

Jurisdiction: The cases presented by petitioner to sustain this Court's jurisdiction to issue the Writ of Certiorari disclose that in both the *Muncie Gear Works v. Outboard Marine & Mfg. Co.*, 315 U. S. 759 and *Exhibit Supply Co. v. Ace Patents Corp.*, 315 U. S. 126, the patent in the instant litigation was confined to a single circuit in addition to the important questions; in *Morton Salt Co. v. G. S. Suppiger*, 314 U. S. 488 and *Lincoln Engineering v. Stewart Warner Corp.*, 303 U. S. 546, there was a conflict of decision which is a jurisdictional ground in cases presented to this Court; *Mishawaka Rubber & Woolen Mfg. Co. v. Kresge Co.*, 316 U. S. 203, a trade mark accounting question the opinion of the Court was silent on the reasons for granting the Writ.

PETITIONER'S QUESTIONS PRESENTED.

(1)

(a) This question was not pleaded as it must be (Federal Rules of Civil Procedure, Rule 8(c)) and is, therefore, waived.

(b) There being no issue, there is no evidence except the decree itself which disproves defendant's contentions.

(c) None of the three tribunals agrees with defendant's contentions; insofar as it was presented to any, each disagrees with defendant; the comments of the Court of Appeals were dicta; the comments of the Master decide it against defendant.

(d) Defendant's contention is contrary to the decisions of this Court (*Bigelow v. Old Dominion*, 225 U. S. 111,

132; *Birdsell v. Shalliol,* 112 U. S. 485; *Lovejoy v. Murray,* 3 Wall. 1; *Sessions v. Johnson,* 95 U. S. 347; *Corsicana Nat. Bank v. Johnson,* 251 U. S. 68, 84). No decision of any Court supports defendant's claims.

(e) The question is particular and local to the parties; as presented by defendant it is predicated on the simultaneous occurrence of eight events which have not occurred simultaneously in a hundred years, do not occur simultaneously here and, no doubt, will never occur simultaneously.

(f) Defendant's claims are contrary to the statutory rights of the patentee since the statute grants the patentee the right to recover from the user as well as from the maker (R. S. 4884 and R. S. 4921, Title 35, Secs. 40 and 70).

(g) There never was any satisfaction for the use of the defendant's machines and never any waiver of the patentee's rights to collect for the infringing use and all three tribunals below so held.

(2)

This is a question of fact decided against defendant by all three tribunals below; it is local to this case.

(3)

Here a question of fact is presented; all three tribunals below decided it against defendant; it is local to this case; defendant's advantages, savings, gains and profits were due to the use of the invention of the patent in suit, as all three tribunals below held. Gordon's invention is a pioneer invention; his first embodiment of his invention was not as efficient as later embodiments, such as defendant used (*Hildreth v. Mastoras,* 257 U. S. 27, 30, 34). That is true of all pioneer inventions and all three tribunals below correctly held that Gordon is not limited to the particular embodiment shown in his patent, holdings consistent

with rulings of this Court ancient and current (*U. S. v. Societe,* 224 U. S. 309; *Winans v. Denmead,* 15 How. 330).

(4)

The patented machine was successful throughout, as all the tribunals have held; the machine used by defendant in infringement was one of the patented machines. The embodiment of the patented machine illustrated in the patent in suit was designed for a particular type of cam; that in the infringing machine for a variant cam. Both embodied the Gordon invention. Both were successful commercially. Every invention—especially every pioneer invention—is embodied in variant machines for variant products. That is one of the merits of a pioneer invention. All three tribunals below were in concord in following this Court's rulings on apportionment.

(6)

This question is one of fact. The Master found that the petitioner gained advantages in overhead by the use of the infringing machines; and the Master found as a fact the amount of the overhead savings arising from the use of these machines. The Court of Appeals concurred in and approved this finding of fact of the Master. This issue is distinctly local to this case.

(5) and (7)

Here are presented questions of fact local to this case and decided adversely to petitioner's contention in all the Courts below. Not only does the proof show that the patentee was damaged, but that the value of the invention claimed in this accounting by defendant was inadequate.

If, in these premises, the law is important, it is that damage to a patentee even when not proved, is presumed (*A. T. & T. vs. Radio,* 5 Fed. (2) 535; *U. S. Frumentum*

vs. Lauhoff, 216 Fed. 610, 623, C. C. A. 6), and that a license to make and sell is not a measure for a license to use (*Dowagiac v. Deere & Webber*, 284 Fed. 331, 340 (C. C. A. 8)), nor satisfy the provision of the statute (Title 35, Section 70) relating to an injunction against future use (*The Suffolk Mfg. Co. v. Hayden*, 3 Wall. 315, 320).

ARGUMENT.

The points upon which petitioner relies, and which it claims it will urge if a writ of certiorari is allowed by this Court, all involve issues of fact which were resolved against the petitioner by the Master to whom this case was referred, and by the District Court (save only as to the issue on overhead), and by the Court of Appeals on all issues. In addition to the reasons which respondent has advanced on pages 2 and 3, as to why this Court should not grant a writ of certiorari to petitioner in this case, the respondent briefly summarizes its argument with respect to each of the points upon which petitioner relies.

POINT (1): Respondent made no "compromise agreement" or "deal" with Walcott Machine Company, the infringing manufacturer.

In *Gordon Form Lathe Company v. Walcott Machine Company*, 32 F. (2d) 55 (1929), the Circuit Court of Appeals of the Sixth Circuit found that the machine which the defendant there manufactured and sold, and which the petitioner here used, infringed Gordon. The Court reversed the District Court and remanded the case. Thereafter, proceedings were had in the District Court, resulting in an amended final decree against that company. This amended final decree is set forth at length in the record (R. 1670-1672). Paragraphs (6) and (8) of that amended final decree are:

> "(6) It being represented to the Court that the Defendant is not financially able to respond to a money

judgment for damages and/or profits, no accounting is ordered, but on the contrary it is ordered that the Plaintiff recover of the Defendant nominal damages in the sum of One Dollar ($1.00), without reference to a Master."

"(8) That Plaintiff do recover of the Defendant Four Thousand Dollars ($4,000.00) as its costs in this Court and the Court of Appeals and judgment may be had against the Defendant for such Four Thousand Dollars ($4,000.00)."

Apparently, the petitioner makes the same claim before this Court as it made in the court below, in the District Court, and before the Master, to the effect that the respondent entered into some sort of a compromise agreement with the Walcott Machine Company (the defendant in 32 F. (2d) 55), under the terms of which respondent accepted $1.00 nominal damages and $4,000.00 of costs, in order that the respondent might then proceed against purchasers of the infringing machine and recover large sums of money from these purchasers.

The petitioner did not plead this issue when this case was tried on the merits in the District Court. It was raised for the first time on the hearing before the Master in the accounting matter. The Master who heard this accounting matter well understood this issue. His summarization of petitioner's claim is found on page 81 of the record.

Whether such a compromise agreement was or was not made presented a clear-cut question of fact; and the burden was on the petitioner to prove that such an agreement had been made. Petitioner did not meet this burden. The testimony in the record on this point is undisputed. That testimony (R. 970-971) is to the effect that the amended final decree in the *Walcott* case (R. 1670-1672) was presented by counsel for respondent "*after investigation*"; that counsel was not aware of any settlement "we made with the Walcott Company"; that while there was no

formal bill of costs filed in the *Walcott* case, "we checked our costs quite carefully at the time, and I think they ran quite in excess of that figure of $4,000." On this issue of fact the Master found (R. 82):

> "There is no evidence here to establish that the decree for nominal damages in the *Walcott* case was not based upon the financial condition of the Walcott Company, as recited in the decree. * * * Therefore, even if a defense based on these claims of defendant can be raised at this time, I find and conclude that the defense is not substantiated by the evidence."

The District Court and the Court of Appeals are in accord with this finding.

In the court below, the petitioner (Point 13) of its statement of points to be relied on upon appeal under Rule 75(d)) assigned this finding as error (R. 1376); and the court below affirmed the judgment of the District Court on the petitioner's appeal (see Decree—No. 9123, Vol. V, R. p. 2).

On page 20 of its brief petitioner sets forth an excerpt from the decision of the court below. The Court of Appeals did not discuss this assignment of error at all in its opinion, apparently for the obvious reason that the assignment was without merit. In its recital of the historical background of this litigation, the court below used the language quoted by petitioner on page 20 of its brief (133 F. (2d) 487, 491). This language was a mere recital, not chosen to indicate that the Court of Appeals disapproved the specific finding of the Master concurred in by the District Court, *since the decree of the court below expressly affirmed the Master and the District Court on the petitioner's appeal.*

If, contrary to the recital in the amended decree in the *Walcott* case (32 F. (2d) 55), the Walcott Company was financially able to respond to a money judgment; then it is pertinent to inquire why petitioner did not proceed against

the Walcott Company to recover under the patent guarantee clause given to petitioner when it brought the infringing machines (R. 1610).

Birdsell v. Shaliol, 112 U. S. 485 (1884), which petitioner (p. 20 of its brief) refers to as "the old case," states a rule of the law of torts which is fundamentally sound, and which has been consistently followed. The rule in that case is that if one person is in any case exempt from being sued for damages for using the same machine for the making and selling of which damages had been recovered against and paid by another person, it can only be when actual damages have been paid. The rule is grounded upon the theory that in such a case the plaintiff has been deprived of the same property by the acts of two wrongdoers, and has received full compensation from one of them. That case points out that to say that the mere obtaining judgment for nominal damages vests the property in the defendant would be an absurdity; and that under our law, judgment against one joint trespasser, without full satisfaction, is no bar to a suit against another for the same trespass.

The rule in *Birdsell v. Shaliol, supra,* is grounded on *Lovejoy v. Murray,* 3 Wall. 1. *Lovejoy v. Murray* was followed and applied in *Bigelow v. Old Dominion Copper Co.,* 225 U. S. 111, 132 (1912).

In many respects the instant litigation almost parallels the litigation in *Birdsell v. Shaliol, supra.* In that case Birdsell, the patentee, granted a license to a company of his own, the Birdsell Manufacturing Company, to make, vend, and use the invention. Birdsell *individually* brought an action against the Ashland Machine Company for infringement of his patent. In that suit the Birdsell Manufacturing Company was not made a party; but a perpetual injunction was decreed, and the case was referred to a Master, who reported that the defendant had made no

profits for which it should account, and that if any damages had been sustained, they had been sustained by the Birdsell Manufacturing Company, and that Birdsell was entitled to recover only $1.00 as nominal damages. The Ashland Machine Company afterwards, pending that suit, became insolvent; and a decree was rendered in Birdsell's favor for nominal damages, and for costs, which were paid by that company. *Thereafter,* Birdsell and the Birdsell Manufacturing Company sued Shaliol *et al.,* the user of one of the machines made by the Ashland Machine Company. *It was in this latter suit that this Court held that the nominal damages decreed in the former action, to which Birdsell was a party, did not prevent recovery as against the user of the machines.*

As far as petitioner's Point (1) is concerned, this fact issue was resolved against it by the Master; and the Master's finding was concurred in by the District Court and the Court of Appeals. The situation thus presented does not admit of the issuance of a writ by this Court for the sole purposes of reviewing this finding of fact which rests on undisputed testimony. There is no diversity of decision between the Master, the District Court, and the Court of Appeals on this fact question.

POINT (2): The Master resolved the issue of fact on the "straightening operation" against petitioner; and the District Court and the Circuit Court of Appeals approved and accepted the Master's finding.

The real substance of petitioner's Point (2) is that it claims a deduction from its infringing profits for the use of a straightening operation which it claims was added at the time that it began to use the infringing machines. The Court below discusses this issue at length (133 F. (2d) 487, 498), and refers to the Master's finding with respect to this straightening operation, and points out that the Master

found that (133 F. (2d) 487, 498) "the additional operation was not attributable to the difference between the use of the infringing machines and the shaper."

On page 24 of its brief, the petitioner only sets forth a part of the findings of the Master on this point. The Master made the following express finding (R. 41) which immediately precedes that quoted by the petitioner:

> "The conclusion I draw from this and other evidence not detailed here is that while the use of the Walcott lathes may have been the occasion for adding the straightening operation, it was not the underlying cause for doing so, the operation being rather attributable to improvement in defendant's standards of workmanship. Under the testimony of its own witnesses, defendant could have made the Walcotts exactly like the shapers with regard to the necessity of straightening by simple changes with respect to steady rests, but it preferred instead to adopt the straightening operation, which was undoubtedly the better practice. If the extra straightening operation was in fact attributable to the difference in machines, it is indeed difficult to see why the defendant upon discovery of that fact did not reject the Walcott machines instead of buying more and then discarding the shapers."

The rule is that where a deduction is claimed from infringing profits by the infringer, if the deduction is not explained in a satisfactory way, the Master does right in rejecting it.

Elizabeth v. Pavement Co., 97 U. S. 126, 142.

The position of petitioner to the effect that it must be granted the cost of this straightening operation under the rule of *Tilghman v. Proctor*, 125 U. S. 136 (1888), is without merit. That case does not hold that where an infringing defendant adds another operation in the manufacture of its product on the infringing machine, the cost of that added operation is a deduction from its infringing profits, *if, as here, that added operation did not result from the use of*

the infringing machine, but, as the Master found, was attributable rather to improvement in the defendant's standards of workmanship.

What the Master found was that the defendant was putting out a better camshaft, and it added a straightening operation to do this. *This cost was not attributable to the use of the infringing machine, as the Master expressly found.* This finding of the Master was concurred in by the District Court and by the Court below. Here again there is no diversity of decision between the Master, the District Court, and the Court of Appeals on this fact question.

Petitioner's request that this Court issue its writ of certiorari to review this finding of fact should be denied.

POINT (3): The Master resolved the fact issue of apportionment against petitioner; and the District Court and the Court of Appeals approved and accepted this finding.

The Court of Appeals discusses this issue of apportionment at length (133 F. (2d) 487, 492, 493, 494), and states (p. 493) that Gordon's patent was generic; that Gordon and Redlin taught and gave to the industry a new method for shaping camshafts, which contributed substantially to the mass production of automobile engines. The Court points out that there is such a thing as second-hand improvements; and (133 F. (2d) 487, 493) that while Melling was working to improve Gordon's machine and was successful, Melling's accomplishment was not a creation and was not sufficiently different from Gordon to say that the fruit of Melling's mechanical tree was the only fruit that the Ford Company gathered; and that "Melling's improvements were not grafts on Gordon's patent tree, but only a limb upon it." The Court below referred to the decision of this Court in *Westinghouse Co. v. Wagner Mfg. Co.*, 225 U. S. 604, and quoted the confusion rule as stated by this Court in that case.

The respondent's position on this apportionment issue was two-fold:

(1) That this case was not one permitting apportionment because Gordon's patent was generic, and the alleged improvements made by Melling (even though patented) were held to infringe Gordon, and to be the mechanical equivalent of Gordon. Hence the alleged improvements were within the inhibited field of the patent, and that those alleged improvements gave no rise to a claim for apportionment in a legal sense.

Christensen v. National Brake and Electric Co., 10 F. (2d) 856, 866;
Flat Slab Patents Co. v. Turner, 285 Fed. 257, 282;
Tuttle v. Claflin, 76 Fed. 227, 234.

(2) Gordon's patent had been held generic, and Melling's alleged improvement had been held to infringe Gordon, and to be but the mechanical equivalent of Gordon. Gordon's invention gave value to the whole combination; and that if the Melling machine were stripped of the parts held to infringe Gordon, what would remain of the Melling machine would not constitute an operable unit. Since respondent proved that petitioner made tremendous profits by reason of the use of the infringing machine, the burden rested on petitioner to apportion (if apportionment were proper) and to offer proof which would enable the Master to determine what part, if any, of these profits were attributable to Melling.

The Master well understood the apportionment issue; he discussed it at length (R. 60-71). In his report he states that he does not find it necessary to determine the issue as to whether the Ford Company, as a matter of law, was entitled to an apportionment. *He finds that even if the right to apportionment is recognized, it is impossible to apportion on the proof offered, and that the burden was on Ford to ap-*

portion (R. 69). His finding is that Ford's evidence on the issue consisted almost wholly of expert testimony that one hundred per cent of the value of the infringing machines to the defendant was attributable to the Melling improvements; and he expressly finds (R. 71) that the impossibility of separating the profits sufficiently appears to impose the burden on the defendant, and that resort to the books of the defendant would be of no assistance on the issue; and that the respondent was entitled to all the infringing profits.

This finding of the Master was concurred in by the District Court, and by the Court of Appeals. The Court below thus states (133 F. (2d) 487, 494):

> "* * * The Gordon Company having shown the commingling of profits by the Ford Company, and it appearing that the latter company failed to keep records or to supply evidence that would disclose what proportion of the profits arose from the infringing devices and what proportion, if any, from Melling's improvements, the burden again returned to the Ford Company which it has failed to carry and such failure creates an unavoidable liability."

Mason v. Graham, 90 U. S. 261, does not offer petitioner any support on the issue of apportionment. In that case the Court was able to find and to segregate the saving resulting from the use of the improvement. In the instant case, the Master, the District Court, and the Circuit Court of Appeals found that there was such a commingling of profits that no such finding was possible.

The Master summarized his finding on this issue (R. 71):

> "Consequently, I conclude that the plaintiff is entitled to all the profits; as between that alternative and allowing the plaintiff none, that is the fairer result."

There is no conflict between the decision of the Court of Appeals on that issue and *Dowagiac Mfg. Co. v. Minne-*

sota Moline Plow Company, 235 U. S. 641, *Mason v. Graham*, 90 U. S. 261, *Westinghouse Co. v. Wagner Mfg. Co.*, 225 U. S. 604, and *Sheldon v. Metro-Goldwyn Corp.*, 309 U. S. 390. *In some of those cases proof was offered by the party upon whom the burden of proof rested, justifying the claim of apportionment, and fixing the amount of the profits not attributable to infringement.* As the Master pointed out (R. 70), in this case there was no such helpful proof offered. Here again there is no diversity of decision between the Master, the District Court, and the Court of Appeals on this fact question.

Petitioner's request for the issuance of a writ of certiorari to review the finding on this fact issue of apportionment should be denied.

POINT (4): Melling's patent 1,634,550 infringed Gordon.

Petitioner's point seems to rest on its claim that in the above patent a straight line up and down movement of the tool was substituted for the tool tilting movement found by the Court of Appeals to constitute the gist of the Gordon invention; and that from this it follows that the tilting movement of the tool was not necessary or essential to the successful operation of the infringing machines. *The difficulty with this position of the petitioner is that the Master found that the modified Melling machine made under this patent infringed Gordon* (R. 24). *The Master pointed out that this same conclusion was reached by petitioner's chief tool designer after inspecting this so-called "parallel head Walcott" in 1929.*

The Court of Appeals held Gordon's invention was a pioneer invention, the Gordon patent a generic patent, and the claims were entitled to a wide range of equivalents. Hence only the question of infringement of this patent 1,634,550 remained to be decided in the accounting matter. Under such circumstances, the infringement question was solely a question of fact.

U. S. v. Societe, 224 U. S. 309, 322.

The Court of Appeals discussed this issue at length (133 F. (2d) 487, 495, 496); and under Rule 53 (e) (2), 28 U. S. C. A., foll. § 723c, expressly confirms the findings of the Master supported by the Trial Judge.

Here again there is no diversity of decision between the Master, the District Court, and the Court of Appeals on this fact question.

The petitioner's request for a writ of certiorari of this Court to review this finding of fact should be denied.

POINT (5): Petitioner unlawfully used Gordon's invention.

The Master, the District Court, and the Court of Appeals found that the Ford Company made profits from the use of the infringing machine. The Court of Appeals held in *Gordon Form Lathe Company v. Walcott Machine Company* (32 F. (2d) 55, 61), that this same machine which petitioner used infringed Gordon's patent, the Court holding that infringing machine accomplished the same result as Gordon by the employment of substantially the same means or their equivalents, operating in substantially the same manner. Melling's conception, therefore, under the patent law (as embodied in the infringing machines), and Gordon's conception were one and the same thing.

Machine Co. v. Murphy, 97 U. S. 120, 125.

The Master discussed the matter of this royalty referred to by petitioner on page 31 of its brief; and the Master finds that the 10% royalty paid by the respondent to a company in which Gordon had a large financial interest in a large measure amounted to a transfer of money from one pocket to another. The Master also found that the royalties thus paid were paid *by* the respondent and not *to* the respondent.

The Master rejected this 10% payment as being of no evidentiary value in determining a reasonable royalty. The District Court approved this finding as did the Court of Appeals. That Court discussed the question of reasonable royalty (133 F. (2d) 487, 500, 501); and states that the Master's findings are based upon evidence and inferences reasonably drawn; and since the Master's findings were approved by the District Court, they were accepted by the Court of Appeals in the absence of clearly recognized mistake.

Here again there is no diversity of decision on this fact question between the Master, the District Court, and the Court of Appeals.

The District Court and the Court of Appeals sustained the Master's finding of reasonable royalty of $5,000.00 per machine, the Court of Appeals expressly stating that such result has support in the evidence; and that it does full justice to the Gordon Company. In arriving at his finding of fact on this matter, the Master had the advantage of knowing that the infringing profits received by the petitioner exceeded the reasonable royalty awarded. Under all the authorities the fact of the receipt of these profits was evidence bearing upon reasonable royalty. There was substantial evidence bearing on reasonable royalty which would sustain a royalty of 6¢ a shaft, which would have amounted to over $400,000.

The Master found a reasonable royalty of $120,000 for petitioner's use of the infringing machines. The Master's conclusion on this point is (R. 80) to the effect that the plaintiff and defendant would have come to an agreement to pay $120,000 at the time if the defendant had recognized the Walcott machines as infringing Gordon's patent.

Here again there is no diversity of decision between the Master, the District Court, and the Court of Appeals on this fact question.

Petitioner's application for a writ of certiorari to review this finding of fact should be denied.

POINT (6): The respondent effected and retained considerable overhead savings by reason of the use of the infringing machines.

On pages 33 to 37 of its brief, the petitioner takes the position that respondent is not entitled to recover any overhead savings which the petitioner effected and retained by reason of the use of the infringing machines. Petitioner's position on this issue is the same before this Court as it was before the Master, the District Court, and the Court of Appeals. That position, when properly analyzed, is that overhead never represents anything but inevitable expense; and that for some unknown reason, where that expense is reduced by the use of the infringing machines, thus effecting a saving, the patent owner is not entitled to recover this saving.

This issue on overhead was discussed very thoroughly by the Master (R. 47-59). The evidence was overwhelming that by the use of the infringing machines, the petitioner was able to turn out more camshafts per man hour of operation than was possible by the use of any of its standards of comparison. This meant that the petitioner made a saving in direct labor costs. The Master found that this direct labor saving was only part of the savings—that there were also other savings in overhead. The Master found the amount of these overhead savings and awarded them to the respondent.

The Court below in a footnote (133 F. (2d) 487, 499) listed thirty-one separate items of overhead, being the petitioner's breakdown of overhead items. *The Master found that this breakdown of overhead items constituted petitioner's breakdown at the time of the trial* (which was long after the period of infringement), *the Master expressly finding* (R. 48) *that the records showing the breakdown of*

departmental overhead in its component elements for the accounting period have been destroyed, although total departmental overhead figures are available.

The Master (R. 51, 52) found from the evidence that overhead expenditures were rather dealt with generally in broad classes; and that each class is apportioned between the infringing and non-infringing branches of the business on some recognized accounting basis, such as proportionate direct labor costs. The Master also found that on occasions when it was necessary for the petitioner to determine the cost of operations in producing a part, petitioner's department's ratios of burden to direct labor costs were used to apportion burden among the operations (R. 47).

The respondent in this case took the position that it was entitled to recover all of the savings realized by petitioner through the use of the infringing machines; and that a part of these savings was represented by savings in overhead. It offered considerable evidence on this issue, and it maintained that since petitioner had not preserved its records with respect to its savings in the various overhead items resulting from the use of the infringing machines, the Master was entitled to use the same method of determining overhead and resultant overhead savings, as the petitioner itself used in its own accounting; and that those savings were correctly found by applying the petitioner's departmental overhead percentage rates to the direct labor saving resulting from the use of the infringing machines.

The Master found (R. 49) that there was a saving on the use of the infringing machine with respect to factory supervision (R. 53), employees' liability and compensation insurance, timekeeping, pay roll, and clerical salaries (R. 53), power costs (R. 54), machine depreciation, machine maintenance and repair, cutting tool costs (R. 54, 55, 56), and overhaul costs (R. 55, 56). Summarizing his finding on the overhead savings, the Master says (R. 57):

"It would seem unfair, however, to ignore overhead savings, *since it seems reasonably clear that substantial savings in those costs were realized by defendant in using the Walcott lathe in place of the shaper on Model T and A production.* While it is recognized that application of general ratios of overhead to direct labor costs would lead to unfair results in many cases, I believe an analysis of the evidence here indicates that with the shaper and Walcott machines overhead costs by and large would vary in proportion to direct labor. While some of the elements of overhead would vary little, if at all, these static costs are offset by some elements (e.g., depreciation and cutting tool costs) which would probably increase with the substitution of the shapers for the Walcotts in a greater proportion than direct labor. I therefore adopt the method of computing overhead costs for these two machines by using the departmental percentages. I think this treatment is in line with the cases on the treatment of overhead in patent accountings, and also with the practice of cost accountants to apportion manufacturing burden on a direct labor basis where a more precise method is not feasible. It is to be observed that this method takes into consideration the increased depreciation and maintenance costs of the Model A shaper, since the reduction in speed for that form of shaper increases the overhead costs thus calculated, and since, moreover, the departmental overhead percentages ran considerably higher for Model A and Model T production."

This finding of the Master was rejected by the District Court. The District Court stated (R. 121) that even though he rejected the Master's finding on this overhead issue,

"I am very frank to say that there are very few things in this case that I approach with that feeling of uncertainty; * * *."

The District Court's reasoning in overruling the Master on this issue was based on the assumption that the petitioner did not raise or decrease the salary of a single executive officer, nor did it change the size of its plant (R.

126) as the result of the discontinuance of the machines it was using prior to the adoption of the infringing machines. The District Court did not disapprove any findings of the Master with respect to the actual savings in specific items of overhead. The District Court gave no consideration to the actual savings in certain overhead items which the Master found had resulted from the use of the infringing machines.

The Court of Appeals discusses this overhead issue at length (133 F. (2d) 487, 499, 500), and holds that the District Court should have sustained the Master on this issue, and reverses the District Court. The Court of Appeals points out that the Master ascertained the savings on overhead expense in the same proportion that direct labor cost and time were reduced by the use of the infringing machines. The Court of Appeals also sustains the Master's finding (133 F. (2d) 487, 500) to the effect that the departmental overhead expense was not increased by the use of the infringing machines; and (p. 500) that the production of the cam roughing operations for the Model T camshaft was increased by the use of the infringing machines over the Ford shapers (the standard of comparison) from fifty to seventy-five shafts per hour, and on the Model A camshafts from thirty-six to sixty (over the most favorable standard of comparison urged by petitioner), and on the tractor camshafts from eight to forty over the Landis grinders, which were actually used to make the tractor shafts before infringement began. The Court of Appeals then points out that the inescapable inference from the facts is that the Ford Company was able with the same overhead organization and with reduced capital expenditure to increase substantially the production of camshafts per hour by the use of the infringing machine, and that (p. 500) it is certain that the petitioner gained an advantage in overhead by the use of the infringing machines and that under settled rules of law, the respondent was

entitled to this saving or advantage measured in money. As the Court of Appeals then points out, the direct labor and time cost method of distribution of manufacturing expense used by the Master is based on the theory that the relationship between manufacturing expense and direct labor cost and time consumed in production are so related that by the use of this method the manufacturing cost will be fairly distributed over the entire output and may be allocated to each item with reasonable certainty, and that this method is widely used by manufacturers and gives very satisfactory results if the percentage is properly predetermined; and that there was no issue raised here as to the correctness of the percentages.

The Court of Appeals further pointed out that, in any event, the Master followed the petitioner's own method of accounting to determine the apportionment of manufacturing overhead, and that while this method may not accurately prove the cost, it is the best approximation that can be made under the evidence. Citing *Duplate Corp. v. Triplex Safety Glass Co.*, 298 U. S. 448.

Here again was a fact question: What overhead savings, if any, were realized by the petitioner through the use of the infringing machines? *The petitioner did not preserve its detailed overhead expense records. It did, however, preserve its departmental percentages for the infringing period.* The Master found that the petitioner made savings in many items of overhead expense. Under Rule 53 (e)(2), 28 U. S. C. A., foll. § 723c, this finding of the Master should have been accepted by the District Court, since it was based upon substantial evidence; and, in any event, it was not clearly erroneous. The Court of Appeals reinstated this finding of the Master, thus correcting the error made by the District Court.

It is rather anomalous for the petitioner to claim that even though it may destroy its primary and detailed records with respect to its overhead expense on the infringing

machines and the prior machines in a patent accounting matter it may not be charged with overhead savings which resulted to it from the use of the infringing machine, when the Master found on the evidence that there were considerable savings in overhead resulting from the use of the infringing machines. No injustice is done to the petitioner when the Master follows the petitioner's own method of accounting in allocating overhead and apportions this item on the percentage of direct labor. Since direct labor on the infringing machines was less than on the standards in each instance, the savings were readily computable.

Petitioner's application to the Court for writ of certiorari to review this finding of fact by the Master, concurred in by the Court of Appeals, should be denied.

POINT (7): The Master found damages of the respondent, by way of reasonable royalty, in the sum of $120,000, which finding was concurred in by the District Court and the Court of Appeals.

Respondent is unable to understand petitioner's argument as to Point (7), pages 37, 38, 39, and 40 of its brief. The Master's finding as to reasonable royalty was that the $120,000 would represent a fair and reasonable royalty for the use of the 24 infringing machines by petitioner (R. 71-80). The District Court approved this finding, as did the Court of Appeals. The Court of Appeals discussed the issue (133 F. (2d) 487, 501) and stated that the Master gave proper weight to all considerations, and that the Master's findings, concurred in by the District Court, would be accepted by the Court of Appeals, in the absence of clearly recognized mistake.

The Master found (R. 93) that the respondent was entitled to its choice of petitioner's infringing profits amounting to $206,824.22; *or* $120,000.00 as respondent's damages. *This finding of the Master was confirmed in its entirety by*

the Court of Appeals in its decree in No. 9122. The Master answers each one of the "conditions precedent" referred to by petitioner on pages 38 to 40 of its brief, and disposes of each of these in a well-reasoned opinion; and his findings are based on the evidence. The Court of Appeals referred to the report of the Master (133 F. (2d) 487, 492) as being "a very able and complete report on the claims of the parties and a thorough discussion of the facts and applicable law."

It has been pointed out heretofore that the petitioner used twenty-four infringing machines; and that it continued to use some of these machines long after the Court of Appeals had held (32 F. (2d) 55) that these particular machines infringed Gordon. The petitioner consistently refused to make any settlement with respondent; and relitigated the question of infringement (87 F. (2d) 390). It had the use of these infringing machines in turning out nearly eight million camshafts; and the Master finds that its profits arising from the use of these infringing machines were in excess of $206,000.

The Master does not award the respondent both profits and damages. The respondent has the choice of the two.

Here again there is no diversity of decision between the Master, the District Court, and the Court of Appeals on this fact question.

This finding of fact of the Master, concurred in by the District Court and the Court of Appeals, affords the petitioner no claim for a writ of certiorari of this Court to review this finding.

CONCLUSION.

Based on the foregoing argument, it is respectfully submitted that on the several points upon which the petitioner seeks review by this Court, the Circuit Court did not err. That Court accepted the findings of the Master in their entirety. These findings were based upon substantial evidence. Under Rule 53 (e) (2), 28 U. S. C. A. foll. Sec. 723c, the District Court should have accepted all of those findings. The Court of Appeals corrected an error made by the District Court in this matter; and accepted the Master's findings, concurred in by the District Court, on all of the other issues raised by the petitioner here and before the Court of Appeals. Under Rule 52 (a), 28 U. S. C. A., foll. Sec. 723(c) the Court of Appeals could not do otherwise than accept the findings of fact of the Master which were accepted by the District Court.

Wherefore, respondent prays that the petitioner's petition be denied; and that on that petition this Court refuse to issue its writ of certiorari.

F. O. Richey,
John W. Michael,
Geo. D. Spohn,
B. D. Watts,
Attorneys for Respondent.

Lecher, Michael, Whyte & Spohn,
Richey & Watts,
Swan, Frye & Hardesty,
Of Counsel for Respondent.

SUBJECT INDEX.

	Page
1. Opinions Below	1
2. Jurisdictional Questions	2
A. The writ of certiorari was granted under a wrong impression	2
B. Each point was decided against Petitioner by three fact finding tribunals below	4
3. Statement of the Case	6
A. The one dollar award in the decree in the Walcott case was nominal damages	6
B. None of the infringing machines Ford used came within the Walcott suit or within the alleged compromise agreement	7
C. Patentability	11
D. The Walcott or Melling Machine is a Gordon Machine, as was held by the Courts below	14
E. Petitioner's claims and comparisons are predicated upon the embodiment of the Gordon Invention illustrated and described in the Gordon patent and not upon the Gordon invention	15
5. Summary of Argument	20
6. Argument	20
A. Point 1—Under the plain provisions of the statute (R. S. § 4921) respondent is entitled to recover all of the profits realized by the Petitioner through its use of the infringing machines	20
(a) (b) Response to Petitioner's argument 6 A (a) and (b), (Petitioner's brief pp. 21-24)	22
(1) That Respondent suffered damages by the infringement was found on the evidence by each of the three fact finding tribunals below	22
(2) Findings of the Master regarding damages affirmed by the District Court and the Court of Appeals	24
(3) Gordon proved Petitioner's profits	25

Synopsis of Argument—*Continued.*

Page

(c) Response to Petitioner's argument 6 A (c) (Petitioner's brief pp. 25-32). The alleged Gordon-Walcott settlement agreement 30
No evidence was suppressed 40

(d) Response to Petitioner's argument 6 A (d) (Petitioner's brief, pp. 32-34)—Respondent was prompt and vigilant in protecting its patent rights 44

(e) Response to Petitioner's argument 6 A (e) Petitioner's brief pp. 34-42) *Birdsell vs. Shaliol,* 112 U. S. 485 47
The Michigan Law Contention 50

B. Point 2 — On the proposition that an infringer is liable for actual and not possible gains 53

(a) Response to Petitioner's argument 6 B (a) to (d) (Petitioner's brief pp. 43-55) —Petitioner was entitled to no deduction for the alleged straightening operation.. 53

C. Point 3 — Apportionment 63

(a) Decision of the courts below on the apportionment question 65

(b) to (f) — Response to Petitioner's argument 6 C (b) to (f) (Petitioner's brief pp. 56 to 78) 68

D. Other errors here and there in Petitioner's brief 83

Resolving doubts 90

Pioneer and Improvement Patents 91

Gordon Machine was successful in turning many cams and many shafts at the Ford plant 91

The questions of patentability and infringement are not included in the three point on which certiorari was granted 97

Conclusion 97

LIST OF AUTHORITIES.

Page

Table of Cases:

Adamson vs. Gilliland, 242 U. S. 350, 353 6

Aluminum vs. Thompson, 122 F. (2d) 796, 799 (C. C. A. 6) 83

American Telephone & Telegraph Co. vs. Radio Audion Co., 5 F. (2d) 535 23

Avery, B. F. & Sons vs. J. I. Case Plow Works, 174 F. 147 8

Bassick Mfg. Co. vs. Adams Grease Gun Corp. (C. C. A. 2d 1931), 54 F. (2d) 285 30

Bassick vs. Hollingshead, 298 U. S. 415 91

Beach vs. Hatch, 153 F. 763 30

Birdsell vs. Shaliol, 112 U. S. 485, 488, 489 ..... 20, 47, 48, 51, 52

Black vs. Thorne, 111 U. S. 122, 28 L. Ed. 372 26

Brill vs. St. Louis Car Co., 80 F. 909 8

Brown vs. Piper, 91 U. S. 37, 42 35

Cawood Patent Case, 94 U. S. 695, 24 L. Ed. 238.. 26

Christensen vs. National Brake & Electric Co., 10 F. (2d) 856, 866 ..... 72, 73, 76, 79

Cleveland Automatic vs. National Acme, 52 F. (2d) 769 (C. C. A. 6) 92

Computing Scale Co. vs. Toledo Computing Scale Co., 279 F. 648, 677 61

Continental Paper Bag Co. vs. Eastern Paper Bag Co., 210 U. S. 405, 416, 422 6

Coupe vs. Royer, 155 U. S. 565, 577-580, 15 S. Ct. 199, 39 L. Ed. 263 83

Crosby Valve Co. vs. Safety Valve Co., 141 U. S. 441 78

List of Authorities—*Continued.*

Page

Crown Cork vs. Aluminum Stopper, 108 F. 845 (C. C. A. 4) 92

DeLaski & Thropp Circular Woven Tire Co. vs. Empire Rubber & Tire Co. (D. C. N. J. 1916) 239 F. 139 48

Dillon vs. McEachran, 69 F. (2d) 144, 146 (C. C. A. 6) 94

Dowagiac Mfg. Co. vs. Deere & Webber Co., 284 F. 331 ..... 51, 52

Duplate vs. Triplex, 298 U. S. 448, 457 ..... 80, 86, 90

Egry Register Co. vs. Standard Register Co., 23 F. (2d) 438 ..... 78, 88

Eibel vs. Paper Company, 261 U. S. 45, 63 86

Electric Gas-Lighting Co. vs. Wollensak (D. C. Ill. 1895) 70 F. 790 48

Elizabeth vs. Pavement Co., 97 U. S. 126, 141, 143 ..... 29, 61, 73

Ellett vs. Klein, 22 F. (2d) 807, 810 90

Expanded Metal Co. vs. General Fireproofing Co., 247 F. 899, 910 88

Expanded Metal vs. Bradford, 214 U. S. 366 13

Fetzer & Spies vs. I. T. S., 260 F. 939, 947 (C. C. A. 6) 36

Fisher et al vs. Consolidated Amador Mine (C. C. Cal. 1885) 25 F. 201 48

Flat Slab Patents Co. vs. Turner, 285 F. 257 ..... 68, 70, 81

Ford Motor Co. vs. Gordon Form Lathe Co., 87 F. (2d) 390 68

Gayler vs. Wilder, 10 How. 477, 493 8

General Electric Co. vs. Continental Lamp Works (C. C. A. 2d 1922) 280 F. 846, 850 30

Page

Gordon Form Lathe Co. vs. Walcott Machine Co., 32 F. (2d) 55, 58, 60, 61 ..... 15, 18, 19, 41, 68, 69, 72, 76, 82

Hewes vs. Gay, 11 F. (2d) 165 (D. C. Conn.) 36

Hilditch vs. American Bumper Corp. (E. D. N. Y. 1926), 15 F. (2d) 451, 454 30

Hildreth vs. Mastoras, 257 U. S. 27, 34 ..... 12, 92, 96

Horvath vs. McCord Radiator & Mfg. Co. (6th Cir.) 100 F. (2d) 326, 330, 336 ..... 26, 67, 76, 84

Interstate Circuit vs. U. S., 306 U. S. 208, 226 31

Keller vs. Adams-Campbell, 264 U. S. 314 ..... 2, 11

Keystone vs. Adams, 151 U. S. 139 80

Knox et al. vs. Great Western Quicksilver Min. Co., 14 F. Cas. 809 88

Leeds and Catlin vs. Victor Talking Machine Co., 213 U. S. 301, 325, 332 ..... 14, 78

Levin Bros. vs. Davis Mfg. Co., 72 F. (2d) 163, 164 79

Lincoln Engineering Co. vs. Stewart-Warner Corp., 303 U. S. 545 ..... 77, 78

Littlefield vs. Perry, 88 U. S. (21 Wall.) 205, 22 L. Ed. 577 26

Machine Co. vs. Murphy, 97 U. S. 120, 125 ..... 14, 70

Manufacturing Co. vs. Cowing, 105 U. S. 253 78

Marconi Wireless Telegraph Co. vs. U. S., 63 S. Ct. Rep. 1393 ..... 72, 75

Mason vs. Graham, 90 U. S. 261 80

McBride vs. Scott, 132 Mich. 176, 93 N. W. 243 51

McDonald vs. Henry Hornblower & Weeks, 268 Mich. 626, 256 N. W. 572 51

McGrew Machine Co. vs. One Spring Alarm Clock Co., 245 N. W. 263 7

List of Authorities—*Continued.*

	Page
Melling vs. Gordon, 4 F. (2d) 945, 946	1, 41
Melling vs. Gordon, 14 F. (2d) 437	1, 41, 42
Mergenthaler vs. Press, 57 F. 502, 505	96
Merriam vs. Ogilvie, 170 F. 167 (C. C. A. 1st)	36
Merriam vs. Saalfield, 198 F. 369, 371 (C. C. A. 6)	36
Mevs vs. Conover, 23 L. Ed. 1008	26
Motor vs. Piano, 19 F. (2d) 993	90
Mowry vs. Whitney, 81 U. S. (14 Wall.) 620, 650, 20 L. Ed. 860	26
Mueller vs. Glauber, 184 F. 609, 618, 619 (C. C. A. 7)	31
Mumm vs. Decker, 301 U. S. 168	11
Perkins vs. Yost, 189 F. 625 (C. C. Ohio)	36
Philadelphia Rubber Wks. Co. vs. U. S. Rubber Reclaiming Works, et al., 277 F. 171, 177 (C. C. A. 2)	88
Radio Corporation vs. Majestic Distributors (D. C. Conn. 1934), 6 F. Supp. 87, 88	30
Radio vs. Radio, 293 U. S. 1	11
Reinharts vs. Caterpillar, 85 F. (2d) 628, 631 (C. C. A. 9)	83
Remington vs. National, 6 F. (2d) 585, 630	96
Reynolds vs. Young, 101 F. (2d) 257 (C. C. A. 6)	84
Root vs. Railway Co., 105 U. S. 189	27
Sessions vs. Romadka, 145 U. S. 29, 36 L. Ed. 609	26
Sheldon vs. Metro-Goldwyn Corp., 309 U. S. 390, 402, 403-406 (44 U. S. P. Q. 607, 611-613)	72, 74, 75
Steam Stone-Cutter Co. vs. Sheldons, 21 F. 875	49, 50
Stebler vs. Riverside Heights Orange Growers' Ass'n, 214 F. 550	48

Page

Stromberg Motor Devices Co. vs. Zenith-Detroit Corp., 73 F. (2d) 62 (C. C. A. 2) 78

Sunlin vs. Skutt, 133 Mich. 208, 94 N. W. 733 51

Thomson Spot Welder Co. vs. Ford Motor Company, 265 U. S. 445 11

Thum vs. Dickinson, 254 F. 219 90

Tilghman vs. Proctor, 125 U. S. 136, 146, 31 L. Ed. 664 ..... 26, 27, 28, 56, 90

Toledo Scale vs. Computing Company, 261 U. S. 399, 423 43

Tucker vs. Dallas, 286 F. 754 (D. C. Texas) 36

Tuttle vs. Claflin, 76 F. 227, 232, 233, 234 ..... 72, 74

Union Tool Co. vs. Wilson, 259 U. S. 107, 113 48

U. S. vs. Esnault-Pelterie, 299 U. S. 201 ..... 11, 83

U. S. vs. Ferger, 250 U. S. 199, 204 35

U. S. Frumentum Co. vs. Lauhoff (C. C. A. 6), 216 F. 610, 615, 623, 132 C. C. A. 614 ..... 22, 23

U. S. vs. Sinclair, 126 F. (2d) 827 (C. C. A. 10) 34

U. S. vs. Societe, 224 U. S. 309, 322, 328 ..... 16, 17, 83

U. S. vs. Stanolind, 113 F. (2d) 194, 200 (C. C. A. 10) 35

U. S. Printing Co. vs. American Playing Card Co. (D. C. Mich. 1895), 70 F. 50 48

Wagner Sign Service vs. Midwest News Reel Theatres, 119 F. (2d) 929 52

Wales vs. Waterbury, 101 F. 126, 128 (C. C. A. 2) 90

Walling vs. Patton, 134 F. (2d) 945 (C. C. A. 6) 35

Warren vs. Keep, 155 U. S. 265 78

Watson et al vs. Smith (C. C. 1881) 7 F. 350 30

Westinghouse Co. vs. Wagner Mfg. Co., 225 U. S. 604, 614-15, 616-17 ..... 71, 72, 75, 90

List of Authorities—*Continued.*

Page

Westinghouse Electric Mfg. Co. vs. Mutual Life Insurance Co. of N. Y. (C. C. N. Y. 1904) 129 F. 213 48

Williams Manufacturing Co. vs. United Shoe Machinery Corporation, 316 U. S. 364, 367..... .....4, 5, 12, 14, 24

Wine Railway Appliance Co. vs. Enterprise Railway Equipment Co., 297 U. S. 387 45

Yesbera vs. Hardesty Mfg. Co., 166 F. 120, 125....78, 81

Table of Text Books:

Federal Rules of Civil Procedure, Rule 53(e)(2) 43

From Man to Machine, Rogers (1941) 18

Klooster, Patent Accounting 61, 89

March of the Iron Men, Burlingam (1938) 84

Walker on Patents (Deller's Ed.) 30, 89

Table of Statutes and Rules:

R. S. § 4888, 35 U. S. C. A., Sec. 33 16
R. S. § 4915, 35 U. S. C. A., Sec. 63 .....11, 46
R. S. § 4921, 35 U. S. C. A., Sec. 70 .....20, 26, 30

In The

SUPREME COURT OF THE UNITED STATES

October Term, 1943 - - Number 49 and 50

FORD MOTOR COMPANY,
Petitioner,

vs.

GORDON FORM LATHE COMPANY,
Respondent.

BRIEF FOR RESPONDENT.

---

1. OPINIONS BELOW.

To the opinions listed by the Petitioner at pages 1 to 3 of its Brief, there should be added the following:

The opinion of Judge Westenhaver in the United States District Court for the Northern District of Ohio, Eastern Division, in *Melling vs. Gordon,* 14 F. (2d) 437;

The opinion of the United States Circuit Court of Appeals for the District of Columbia in *Melling vs. Gordon,* 4 F. (2d) 945; and

The various opinions in the Patent Office in the interference between Melling and Gordon, none of which was reported in the Federal Reporters, but all of which were decided in favor of Gordon.

2. JURISDICTIONAL QUESTIONS.

A. The writ of certiorari was granted under a wrong impression.

Certiorari in this case should be dismissed under the rule of this Court stated as follows in the syllabus of *Keller vs. Adams-Campbell*, 264 U. S. 314:

> "2. Certiorari granted under the impression that the case involved an important general question under Rev. Stats., Sec. 4916, as to rights intervening between the issue and reissue of a patent, will be dismissed when it is found that the case was really disposed of by the lower courts upon the ground of non-infringement."

In its Petition for Certiorari, Petitioner named seven reasons for the granting of the Petition. This Court originally granted the Petition on the first ground (after the granting of the Petition the review was extended to the second and third grounds).

(1) The first reason or ground was based on an alleged agreement between Respondent and the Walcott Company. In its petition, Petitioner stated, without qualification, what Petitioner claimed to be the terms of this alleged agreement and proceeded to paint a black picture for the public, etc. thereon, without, however, telling this Court that what terms, if any, were decided upon by the Respondent and the Walcott Company did "not appear from the record." In other words, there was nothing in the record to support what Petitioner claimed to be the terms of this alleged

agreement. At page 25 of its Main Brief, Petitioner, however, admits that "what was decided upon between the Gordon Company and the Walcott Company" • • • "does not appear from the record." Such was the finding of the Master (R. 82) affirmed by the District Court. Thus there is nothing to support the basis of the ground upon which the Petition was originally granted. We might add that there is not only nothing in the record to support the alleged terms of the alleged agreement, but there is nothing in the record to support the claim that there was any such agreement at all, as we will show hereinafter. As is demonstrated hereinafter at page 7, even if there had been any such agreement, it did not and *could not possibly have* included the *particular* 24 machines used by Petitioner.

There is no more truth in the other two claims and no more basis in truth for the other two points brought up for review.

(2) The Master held that the product of the infringing machine was identical or comparable (without the straightening) with the product of the standard (the shaper) so that his comment on a second ground or basis are immaterial.

(3) The Gordon invention was successful in all the embodiments in which it was incorporated for the turning of non-geometric forms. There being a host of non-geometric forms, no particular embodiment of the invention was capable of turning them all without adjustments and modifications within the scope of the Gordon pioneer invention and within the metes and bounds of his patent claims. The particular embodiment disclosed in the Gordon patent was eminently successful in turning the kind of non-geometric form for which it was built and adjusted. Petitioner's cam being a variant of the form for which this

embodiment was constructed and adjusted, it was necessary to make adjustments in the construction which could only be done in a second embodiment which still incorporated the Gordon invention, as all the courts have said.

Petitioner, being conscious of these errors, seeks in its Main Brief, review of the question of patentability. One cannot read Petitioner's brief without coming to the conclusion that the alleged accounting errors (if not misrepresentations) were advanced in an effort to induce the Court to review the question of patentability such as was sought in the case of *Williams Manufacturing Co. vs. United Shoe Machinery Corporation,* 316 U. S. 364.

Hence, although this case is before this Court by reason of the granting of a Writ of Certiorari to review certain points in a patent accounting, and although this Court limited the review to three of the many accounting questions presented for review, Petitioner's brief ranges far afield, challenging the patentability of the invention involved and dealing with other questions not before the Court and concerning some of which this Court denied Petition for Certiorari.

B. Each point was decided against Petitioner by three fact finding tribunals below.

Each of the three points relating to the accounting upon which this Court granted review is a question of fact supported by evidence, and each was decided against the Petitioner's contentions by the three Tribunals below consisting of the Master, the District Judge and the Court of Appeals.

The comment of the Court of Appeals regarding an alleged compromise settlement between Gordon and Walcott quoted at page 14 of Petitioner's brief is mere dicta taken by Judge Hamilton from the Petitioner's brief in that

Court in stating the background of the picture. The statements therein are contrary to the Findings of the Master (R. 82) and to the fact. The Court's dicta is not "substantiated by the evidence," as the Master found (R. 82), affirmed by the District Court. The Court of Appeals paid no heed to this dicta in affirming the Master in all his Findings. This dicta statement of Judge Hamilton did not, and was not intended to, refer to the Ford infringing machines since, as we show hereinafter, none of these could have been within such a compromise settlement as is referred to, if one had been made. Therefore, everything that Judge Hamilton said might be true and there would be no release of any Ford machine.

The question of patentability is not only not before the Court, but that also is a Finding of Fact in which all of the many Tribunals below who ruled upon it are in agreement.

Therefore, every question which the Petitioner presents to this Court is a Finding of Fact which has been decided against the Petitioner in the concurring decisions of three or more lower Tribunals.

Time and again this Court has said that it would not reverse a Finding of Fact thus substantiated by a plurality of fact findings by Tribunals below.

For example, in *Williams vs. United Shoe,* 316 U. S. 364, this Court said, speaking through Mr. Justice Roberts, at page 367:

> "These are findings of fact, despite the petitioner's apparent contention to the contrary, and we will not disturb such concurrent findings where, as here, there is evidence to support them."

This Court cited *Continental Paper Bag Co. vs. Eastern Paper Bag Co.*, 210 U. S. 405, 416, 422; *Adamson vs. Gilliland*, 242 U. S. 350.

3. STATEMENT OF THE CASE.

There has been so much written about patent pools and the illegal use of patents, and the use of patents beyond the intent of the Constitution and the Patent Statutes, that we point out here that the Gordon patent is not now, and never has been, in a patent pool, and never has been used in any way except to manufacture Gordon machines, and to collect from those whom the courts said were infringers. There has never been any effort to restrain business in unpatented parts. Gordon and Redlin who made the invention were individual mechanics of modest means and, with the help of certain of their friends, formed a small company known as the Gordon Form Lathe Company, which succeeded in getting started in business only to be broken up as a result of such infringements as are here complained of.

A. The one dollar award in the decree in the Walcott case was nominal damages.

An examination of the decree in the Walcott case (R. 1670-1672) relied upon by Petitioner as a basis for the alleged compromise agreement, will show that the decree followed the usual form when the award is for "nominal damages." The decree says:

> " • • • It is ordered that the Plaintiff recover of the Defendant *nominal damages* in the sum of One Dollar ($1.00) without reference to a Master." (R. 1671)

In its discussions of the subject the Petitioner conveniently omits the fact that this One Dollar was "nominal damages"; and Judge Hamilton in adopting the Petitioner's contention in his historical outline inadvertently followed the Petitioner's practice of omitting a reference to the fact that this One Dollar was "nominal damages". It is well known that nominal damages are no damages at all but nothing but a peg on which to hang the costs. Of the many definitions to that effect, perhaps the most succinct is that of the Supreme Court of Nebraska in *McGrew Machine Co. vs. One Spring Alarm Clock Co.*, 245 N. W. 263, as follows, page 266:

> "By the term 'nominal damages' is meant a trivial sum, which recognizes a right, but makes no adequate return therefor. It has been said that a return of nominal damages is really no damages at all, but a mere peg to hang the costs on."

B. None of the infringing machines Ford used came within the Walcott suit or within the alleged compromise agreement.

Gordon's patent was issued to him on June 16, 1925 (R. 2). Eighteen of the infringing machines used by the Petitioner were bought by it from the Walcott Machine Company prior to the issuance of the patent to Gordon (R. 138, 139). As to these machines sold, Walcott was not an infringer, since their manufacture and the sale occurred prior to the grant of the patent to Gordon. At that time Gordon had no right of action against those who appropriated his invention. This right was obtained by him on the date of the issuance of the patent; and Gordon could not have brought suit against anyone for adopting his invention before the patent issued.

Gayler vs. Wilder, 10 How. 477, 493;
Brill vs. St. Louis Car Co., 80 F. 909;
B. F. Avery & Sons vs. J. I. Case Plow Works, 174 F. 147.

(1) *Hence, as to these eighteen machines, Walcott was not even a tortfeasor.* There could, therefore, be no joint-tortfeasors; and Petitioner's argument (its brief, pp. 34-43) on the release of a joint tortfeasor, is totally beside the point as to these eighteen machines. Petitioner's infringement by the use of these eighteen machines commenced on the day the patent issued to Gordon and not prior to that day. When the infringement commenced they were already in the hands of Ford. Never during the infringement were they in Walcott's hands.

Hence, the manufacturer and sale of these eighteen machines was not an infringement by Walcott. The most that Petitioner claims for the hypothetical terms of this hypothetical agreement is the acceptance of the One Dollar ($1.00) for all claims of infringement by Walcott and a release of the machines made and sold by Walcott as infringements. Since these eighteen machines were not within the infringement of Walcott, they were not within this ($1.00) hypothetical agreement or released by the hypothetical waiver and release. Indeed, of all of the hypotheses advanced by the Petitioner, none is advanced which would incorporate those eighteen machines. Therefore, to relieve the Petitioner from responding on these eighteen machines would be an out-and-out violation of the statute awarding an accounting and monetary relief to a patentee whose patent has been infringed without even an hypothesis to support it.

(2) *The remaining six machines purchased by the Petitioner were purchased in 1929 after the patent issued (R.*

139). Under the final decree in the Walcott case, no accounting was ordered, and Gordon did not recover for Walcott's infringement (R. 1670).

The other six Walcott machines covered by the accounting in the instant case were made and sold by Walcott *after* the filing of the bill in the Walcott case. This bill asked for an accounting only for the infringement which had taken place prior to the filing of the bill and therefore the accounting which was denied by the District Judge in the decree of the Walcott case (R. 1671) was and could have been only the accounting which had been asked for in the bill. Up to that time there had not been and there never was an application for an accounting to cover the machines which Walcott made and sold after the filing of the bill.

Gordon recovered nothing from Walcott for the six machines which Walcott sold to Ford after the patent issued. They were not included in the decree in the *Walcott* case. Gordon could not and did not recover anything from Walcott for the eighteen machines which were sold to Ford by Walcott before the patent issued. Ford was using these eighteen machines when the patent issued, and continued to use them right up to the time that its infringement stopped, and it used the six machines from the date of purchase until that latter date. The profits in this case are computed only from June 16, 1925 (the date the patent issued) to March 16, 1931, the date Ford's infringement ceased. Gordon is given none of Ford's profits for the use of the eighteen machines from the date he purchased them in 1924 up to and including June 15, 1925.

Petitioner has asked this Court to assume as correct numerous erroneous hypotheses advanced by the Petitioner and unsupported by the evidence. These include the hypothesis that there was a compromise agreement and the hypothesis that the terms of the agreement were as Peti-

tioner alleges, though in its brief Petitioner concedes that what these terms were "does not appear from the record" and further the hypothesis that the agreement was effected in the State of Michigan. In addition to and further out on the end of the limb, the Petitioner asks the Court to assume that the alleged infringement for which the One Dollar is alleged to have been accepted in the alleged agreement, included these six machines and therefore infringements which took place after the filing of the bill and concerning which no complaint had been made at the time of the alleged settlement and the entry of the decree. Petitioner further asks the Court to assume that the accounting which is alleged to have been waived included these machines, made and sold by Walcott after the filing of the bill and for which no accounting had ever been asked or ordered. In the instant case not only did the Respondent not ask for an accounting to cover what had been done after the filing of the bill in the Walcott case, but no such accounting was ever ordered by the Court.

Therefore, not only is there no evidence to support the contention that the One Dollar covered the accounting which had been asked for and in addition an accounting which had not been asked for or ordered, but it is illogical to conclude that Respondent would have asked that additional machines be included in what could not be paid for. It is of course untenable to assume that the District Court would include in the accounting those machines made and sold after the filing of the bill when there was no application for their inclusion in the accounting.

It follows that the eighteen machines made and sold before the issuance of the patent were not included in the settlement because their manufacture and sale was not an infringement by Walcott and the other six machines were not included in this alleged settlement because these six

machines were not within the scope of the accounting or the infringement complained of and alleged to have been settled for.

C. Patentability.

The most casual reading of Petitioner's brief shows that the real purpose of defendant's petition was to ask this Court to review the question of patentability. The Ford petition should, therefore, be dismissed *(Keller vs. Adams-Campbell,* 264 U. S. 314).

In addition to the usual prima facie presumption of validity that attaches to a patent due to the grant *(Mumm vs. Decker,* 301 U. S. 168; *Radio vs. Radio,* 293 U. S. 1), the validity of the patent in suit endured challenges through Patent Office interference proceedings and proceedings in the District Court under R. S. § 4915 (14 F. (2d) 437). The validity was then sustained by the District Court in Detroit (20 F. (2d) 673), by the Court of Appeals in the Sixth Circuit (32 F. (2d) 55), by the District Court in Detroit in the instant case (unreported, but see R. 118), and again by the Circuit Court of Appeals for the Sixth Circuit in the instant case (87 F. (2d) 390). The issue of validity was a question of fact *(U. S. vs. Esnault-Pelterie,* 299 U. S. 201; *Thomson Spot Welder Co. vs. Ford Motor Company,* 265 U. S. 445).

Not only has the patent been held to be valid throughout these proceedings, but it has been held to be a basic patent covering a pioneer invention and entitled to a wide range of equivalents. On this subject the Court of Appeals in the Sixth Circuit said (32 F. (2d) 55, 58):

> "The present patent is in a very true sense generic, and the patentee *a pioneer* in this particular branch of the art." (Emphasis ours throughout unless otherwise indicated.)

(p. 61):

> "Applying the doctrine of broad equivalents properly applicable to *generic* patents, the variation between the conceptions of Gordon and Melling did not take the machines of Melling out of the domination of the claims awarded to Gordon and Redlin."

At 87 F. (2d) 391, the Court said:

> "Full consideration thereof brings conviction of its insufficiency to warrant modification of our previous conclusion that the patentees were *pioneers* * * *"

and again at 133 F. (2d) 487, 495, as follows:

> "Gordon's invention was generic and in his patent application he described what he conceived to be its best form. He also anticipated it could be used in other forms and proportions. In view of the scope of his claims and the basic character of his invention, the law secures him against imitation by other forms and proportions. We cannot say the findings of the Master supported by the trial judge were clearly erroneous. Federal Rules of Civil Procedure, Rule 53 (e) (2), 28 U. S. C. A. following Section 723c; Adamson vs. Gilliland, 242 U. S. 350, 353, 37 S. Ct. 169, 61 L. Ed. 356; Coupe vs. Royer, 155 U. S. 565, 579, 15 S. Ct. 199, 39 L. Ed. 263."

The findings that the Gordon invention was a pioneer and the patent generic are also findings of fact *(Hildreth vs. Mastoras,* 257 U. S. 27, 34) supported by evidence, and they therefore also come within the rule of *Williams vs. United Shoe, supra.*

That the real basis of Petitioner's brief is an attack upon patentability becomes more apparent from the citation of this Court's decision in *Atlantic Works vs. Brady* at pages 26 and 27 of Petitioner's brief and the discussions in connection therewith. In quoting from the cited decision, Petitioner omits the Achilles' heel of the context which ap-

pears in the Court's decision where Petitioner inserts the stars. It is as follows (107 U. S. 200):

> "The design of the patent laws is to reward those who make some substantial discovery or invention, which adds to our knowledge and makes a step in advance in the useful arts. Such inventors are worthy of all favor."

The universal holding in the many decisions below is not only that the Gordon invention is a "substantial discovery and one which did add to our knowledge and make a step in advance in the useful arts" and, therefore, is "worthy of all favors" but that he was a pioneer in so doing. It is needless for us to cite the many comments in decisions of this Court confirming what was said by this Court regarding the favor to which inventors who make such steps and Gordon and Redlin are worthy. The point is that the numerous Courts below have universally found, as a question of fact, that the Gordon invention relates to this worthy class and not to the class discussed in the emasculated quotation from *Atlantic Works vs. Brady,* and other cases cited and relied upon by Petitioner.

Such comments from the decisions in this and other Courts are legion. We need not go beyond those cited and relied upon in Petitioner's brief. Take, for example, the quotation at the middle of page 29 from this Court's decision in *Pope Mfg. Company vs. Gormully.* Every Court who has ruled upon the Gordon invention has held that the invention is "a really valuable invention," which this Court said in the cited case "should be protected in its monopoly."

The Gordon invention is for a new combination of elements, some or all of which may be old, and is, therefore, patentable under the well established rule stated by this Court, for exampie, in *Expanded Metal vs. Bradford,* 214

U. S. 366; *Leeds & Catlin vs. Victor,* 213 U. S. 325, 332; *Williams vs. United Shoe, supra.* Therefore, it is incorrect to say that the Gordon patent distinguishes from the prior art by some particular feature or is limited to some particular feature of the combination as contended by Petitioner. All of this, as we say, is not before the Court. Every question presented in this regard has been ruled on by three or more Tribunals below and every one has held against Petitioner's contention upon this fact question.

As stated by the Court of Appeals in the Sixth Circuit in a lengthy discussion of the question (32 F. (2d) 57-59) each and every prior art device would have to be radically reorganized on lines not contemplated prior to Gordon to accomplish the primary function of Gordon.

D. The Walcott or Melling Machine is a Gordon Machine, as was held by the Courts below.

The effort to distinguish between the two by calling them by different names is a practice which has been rejected by this Court ever since *Machine Co. vs. Murphy,* where this Court said (97 U. S. 120, 125,), as follows:

> "Except where form is of the essence of the invention, it has but little weight in the decision of such an issue, the correct rule being that, in determining the question of infringement, *the court or jury, as the case may be, are not to judge about similarities or differences by the names of things, but are to look at the machines or their several devices or elements in the light of what they do, or what office or function they perform, and how they perform it,* and to find that one thing is substantially the same as another, if it performs substantially the same function in substantially the same way to obtain the same result, *always bearing in mind that devices in a patented machine are different in the sense of the patent law when they perform different functions or in a different way, or produce a substantially different result.*

> "Nor is it safe to give much heed to the fact that the corresponding device in two machines organized to accomplish the same result is different in shape or form the one from the other, as it is necesary in every such investigation to look at the mode of operation or the way the device works, and at the result, as well as at the means by which the result is attained."

This rule should be applied with the strictest severity in favor of the patentee where the Court finds, as did the Court of Appeals in *Gordon Form Lathe Co. vs. Walcott Machine Co.*, 32 F. (2d) 55, to the effect that it did not occur to Melling how to accomplish Gordon's results until he saw the Gordon machine in operation.

Calling the two machines by different names cannot destroy the identity between the two under this rule, as found by the Courts below. Substantially all of the contentions of Petitioner are destroyed when this rule is accepted.

E. Petitioner's claims and comparisons are predicated upon the embodiment of the Gordon Invention illustrated and described in the Gordon patent and not upon the Gordon invention.

The Gordon invention, being a pioneer invention, is capable of being embodied in a number of different embodiments and so said the Court below (133 F. (2d) 487, 495). The range in which the invention is applicable is both wide and long. Its primary function was the turning of non-geometric forms. The number of non-geometric forms is legion and no single embodiment is capable of turning all of the non-geometric forms which can be turned upon machines embodying the invention. It was not, of course, possible, or permissible under the law, to disclose in the patent in suit all of the embodiments of the Gordon invention for turning all of the non-geometric forms. The Statute and

the decisions of this Court requires the illustration and description of but a single one of these embodiments (R. S. § 4888; *U. S. vs. Societe,* 224 U. S. 309, 328).

In compliance with this law and these decisions, Gordon disclosed a machine which was highly successful in turning a particular kind of a pear-shaped cam, or non-geometric form. Many of the Gordon machines were sold and used successfully in the turning of millions of cams of this particular shape. This particular machine, however, was not an embodiment for commercially turning the different shape of cam which the Ford Company made and used, notwithstanding an effort was made to do so.

The record shows that apart from the Jackson Motor Shaft Company and International Harvester Company Gordon sold twenty-four cam turning lathes (in addition to a number of crank cheek turning lathes) prior to the issuance of the patent. These machines were sold to the following motor companies (R. 1190): two were sold to Nash Motors; one to the Muskegon Motor Specialty Company; two to the Maxwell Motors; two to the Peerless Motor Car Company; seven to the Studebaker Corporation; one to the Packard Motor Car Company; two to the Cadillac Motor Company; one to Peter Hartley Company; one to the Amstead Engineering Company; two to the Reo Motor Car Company; one to the Cleveland Cam Shaft Company; and two to the Willys Corporation. In a number of these instances the customer first brought but one machine and ordered the additional machines only after the first had proven itself in production (R. 1196). In many instances also these Gordon machines turned the customer's entire production of cam shafts over a period of years. Notable among these were Nash, Peerless, Studebaker and Cadillac (R. 1197).

The Walcott, or infringing machine, was merely a variant on the Gordon embodiment or a second embodiment of the Gordon invention designed to turn the particular kind of non-geometric form of cam turned by the Ford Company.

There is an infinite variety of non-geometric forms and an infinite variety of variants or embodiments of the Gordon invention which needs must be designed to turn these various non-geometric forms.

Petitioner contends that the Gordon invention begins and ends in the embodiment of the invention illustrated and described in the Gordon patent, and that Gordon is not entitled to recover for any profits made or any damages done by an embodiment of the Gordon invention which differs from the embodiment illustrated in the patent or is in any way a variant thereon. This, of course, is not the law for, as stated by this Court in *U. S. vs. Societe, supra* (p. 328):

> "We have seen De Bange describe what he conceived to be the best form of his invention, and contemplated that it could be represented in other forms and proportions. This, however, was unnecessary, *for the law would secure him against imitation by other forms and proportions.* Winans vs. Denmead, 15 How. 330; Hotchkiss vs. Greenwood, 11 How. 248, 265; Western Electric Co. vs. LaRue, 139 U. S. 601, 608."

If Petitioner's contention were correct, the more important the invention and the more pioneer the invention, the less could be collected because, as is well known, the first embodiments of most pioneer inventions have no commercial utility at all. This was true, for example, of Dr. Bell's telephone invention which, to common knowledge, was a mere toy, having no commercial utility at all.

What we have said about the telephone is true of nearly all pioneer inventions, including the cotton gin, the airplane, the steam engine, the incandescent light, spinning and weaving machinery, and many others, such as are illustrated and described in the recent book entitled *From Man To Machine* by Rogers (1941). Indeed, as compared with the first embodiment of these pioneer inventions, the first embodiment of the Gordon invention is a marvel of utility since the only thing the matter with the first embodiment of the Gordon invention was that it could not commercially turn all shapes of non-geometric forms. To deny Gordon relief would be equivalent to denying Bell relief because his original telephone could not telephone across the continent or across the ocean, or to deny the Wright Brothers relief because their original "Kitty Hawk" machine would not fly across the ocean or across the continent, or to deny relief to any of these pioneer inventors because their machines were not capable of doing what is done by variants on the original embodiment of their inventions.

The Courts below have not only found that the infringing Walcott machine embodies the Gordon invention, but that it is a mere variant and the full equivalent thereof. Typical of these findings are those of the Sixth Circuit Court of Appeals in *Gordon vs. Walcott,* as follows (32 F. (2d) 61):

> "Tersely expressed, our opinion is that Melling accomplished the same result as Gordon, perhaps more efficiently mechanically, but nevertheless by the employment of substantially the same means, or their equivalents, operating in substantially the same manner. This has universally been held to constitute infringement, and we so hold. Union Paper Bag Machine Co. vs. Murphy, 97 U. S. 120, 24 L. Ed. 935; Westinghouse vs. Boyden Power Brake Co., 170 U. S. 537, 568, 569, 18 S. Ct. 707 (42 L. Ed. 1136); Schiebel

Toy & Novelty Co. vs. Clark, supra; Allen vs. Wingerter, 17 F. (2d) 745, 747 (C. C. A. 3)."

All of the contentions predicated upon the alleged failure of the particular embodiment of the Gordon invention, illustrated in the Gordon patent, at the Ford plant, must, therefore, fail.

Petitioner also refers to the liberal construction given claims by the Patent Office in a Patent Office interference. The Tribunals below, including Judge Westenhaver and the Court of Appeals in the Sixth Circuit, after considering all the evidence, gave the claims the same construction given them by the Patent Office. Thus the Court of Appeals in the Sixth Circuit said in the *Walcott* case (32 F. (2d) 58):

"The claims of the patent in suit were considered as entitled to broad, liberal construction in the Patent Office proceedings, by Judge Westenhaver in the proceedings under R. S. Sec. 4915, and by the District Judge below. We think that such claims are entitled to this liberal construction, and concur in the opinion of the other tribunals that the patent discloses invention and is not anticipated, and that the generic claims are valid."

5. SUMMARY OF ARGUMENT.

1. (a) There was no compromise agreement between Respondent and the manufacturer as Petitioner alleges; (b) the Petitioner admits that there is nothing in the record to establish the alleged terms of this alleged agreement; (c) the Respondent's machines would not have been released by this alleged agreement if there had been such an agreement and if the record did support the alleged terms thereof.

2. The straightening operation was added by Petitioner in order to improve its standards of workmanship; it was not attributable to the difference in the machines.

3. The alleged Melling improvement infringed Gordon and can form no basis for a claim for apportionment; in any event the burden of proving that portion of the profits attributable to such improvement rested upon the Petitioner, and the Petitioner did not meet this burden.

6. ARGUMENT.

A—Point 1—Under the plain provisions of the statute (R. S. § 4921) respondent is entitled to recover all of the profits realized by the Petitioner through its use of the infringing machines.

On this branch of its argument petitioner (Brief pp. 21 to 42) takes the position that respondent (hereinafter referred to as "Gordon") may not make "a compromising agreement" with an infringing manufacturer, and then rely upon *Birdsell vs. Shaliol,* 112 U. S. 485, "to mulct innocent customers of such manufacturer of much larger sums than

any recovery obtainable from the manufacturer." Petitioner states (Brief p. 21) that this point goes to the entire recovery (in the alternative) of both profits and damages.

This proposition thus presented to this Court for its determination is grounded upon assumptions of fact which are contrary to the express findings of the Master on these facts, which findings were adopted by the lower Court and approved by the Court of Appeals. That this proposition thus advanced is grounded upon such assumptions clearly appears, when it is considered:

(1) That Gordon made no "compromise agreement" with the infringing manufacturer.

The Master found (R. 82) that

> "There is no evidence here to establish that the decree for nominal damages in the *Walcott* case was not based upon the financial condition of the Walcott Company, as recited in the decree. Since, according to defendant, the National Automobile Chamber of Commerce had taken over the defense of that suit, it is difficult to see why it did not object to the decree if its effect was to penalize unjustly its members who used the infringing machines; but there is no evidence here of such objection * * Therefore, even if a defense based on these claims of defendant can be raised at this time, I find and conclude that the defense is not substantiated by the evidence."

The non-existence of this alleged agreement is discussed hereinafter at length (pages 30 to 40).

(2) That the recovery here granted to Gordon by the Master (R. 93) is its choice of $206,824.22 as defendant's profits, and $120,000 as its damages. The finding of the Master as to these

profits and damages was affirmed by the Court of Appeals in these amounts respectively.

(a) (b) Response to Petitioner's argument 6 A (a) and (b), (Petitioner's brief pp. 21-24).

(1) *That Respondent Suffered Damages by the Infringement was Found on the Evidence by each of the Three Fact Finding Tribunals Below.*

The question of whether Respondent has suffered damages or failed to prove the suffering of damages is not before this Court. Damages is a question of fact and that question was before each the Master, the District Judge and the Court of Appeals on evidence below, and there are concurring findings of these three Tribunals that Gordon did suffer damages as a result of the infringement.

Moreover, it is well established as a matter of law that a patentee is not required to prove the sufferance of damages by infringement. That fact is presumed from the infringement. Instead of arguing this point we prefer to submit the arguments of the Courts on the subject. The Court said in *United States Frumentum Co. vs. Lauhoff*, (C. C. A. 6), 216 F. 610, that (p. 623):

> "• • • The patentee's exclusive right to the market extends for seventeen years; he is not obliged to find or create and to supply the demand at once; he may have good reasons, of policy or of necessity, for postponing his efforts; but the whole market for the whole period, nevertheless, belongs to him; and by so much as the infringing defendant supplies that demand and permanently fills that market before plaintiff offers to do so, by so much is plaintiff's eventual market impaired. As to articles of long life and to be sold in a limited field this eventual impairment would be about the same whether plain-

tiff, in the early years of his patent, was or was not manufacturing; as to articles of short life and of less limited demand, the impairment would be much less; but it always would be existent, theoretically, and often, practically."

For the first six years of the life of Gordon's patent, defendant was infringing and turning its large production of automobile cam shafts. It is very common knowledge that a machine for cutting automobile cams is an article of long life and must be sold in a limited field, and in that respect, the above quoted language of the Court in the *United States Frumentum* case is particularly apt. The holding of the Court in the *United States Frumentum* case was followed in *American Telephone & Telegraph Co. vs. Radio Audion Co.*, 5 F. (2d) 535, where the Court states the rule as follows (p. 535):

"It has been conclusively settled that the exclusive right conferred by a patent is property, and that an infringement of the patent constitutes a tortious taking of part of that property. *Dowagiac Mfg. Co. vs. Minnesota Plow Co.*, 235 U. S. 641, 648, 35 S. Ct. 221, 59 L. Ed. 398; *United States Frumentum Co. vs. Lauhoff* (C. C. A. 6), 216 F. 610, 615, 132 C. C. A. 614. It seems to me inevitably to follow that a finding of validity and infringement is a finding that the person whose patent rights have been infringed has suffered damage. *It would seem to be equally clear that a decree adjudging a patent to be valid and infringed and directing an accounting is conclusive upon the question of whether or not a plaintiff has been injured, and that that question is not open for consideration or discussion in the accounting proceedings.*"

(2) *Findings of the Master Regarding Damages Affirmed by the District Court and the Court of Appeals.*

Against the finding of the sufferance of damages by the Master and affirmed by the District Court and the Court of Appeals and against the proof on this subject, counsel can offer nothing but the speculations and the arguments of Petitioner. We are full well conscious that these speculations of counsel cannot prevail against the fact finding of the three Tribunals below and the rule of law that even in the absence of such a finding sufferance of damages is presumed from infringement and therefore we are not required to discuss the evidence on the subject under the rule in the *Williams vs. United Shoe* case. Nevertheless, we point out that the President of the Respondent company testified that the purchase and use of the infringing machines was the fatal blow which put the Respondent out of business (R. 282, 283). The proofs are that the Respondent had after the invention proceeded, as far as it was financially able, to make the particular embodiments of the invention capable of producing the particular kind of non-geometric forms known then to be in demand. One of these machines was the embodiment illustrated and described in the patent in suit, another was the machine for making the non-geometric form called the crank cheek. While the inventor was engrossed in the production of these embodiments, the infringing embodiment known as the Walcott machine was produced and adopted and used by the Petitioner. This was as the President of the Respondent testified sufficient to put the death blow to the small and struggling Respondent. This evidence is undisputed in this record. It would be difficult to conceive how greater damage could be done an inventor by an infringer than to put him out of business after he had invested his money and the money of his friends in that business.

When we consider that Mr. Gordon was an individual—what is commonly known as "the poor inventor"—and had available for the engineering, designing, manufacture and marketing of machines embodying his invention for use in making various non-geometric forms, only the limited resources of such an individual inventor and his friends, the extent and seriousness of the damage done by the death-dealing infringement of the Petitioner can be appreciated. The National Patent Planning Commission appointed by President Roosevelt to investigate and report upon the patent system went out of its way to make note of the contribution to American industrial progress made by individual inventors who market machines embodyinig their inventions just as Gordon did. We can have no better illustration of how these proceedings thus commended are killed in the bud by a larger and more powerful manufacturer than the instant case. Manifestly if such proceedings go unchecked the day of the individual or poor inventor is over.

(3) *Gordon proved Petitioner's profits.*

This cause was commenced in equity, seeking injunctive relief against petitioner to prevent its use of the infringing machines, and that the defendant be ordered to account for and pay to Gordon, defendant's profits unlawfully derived from the infringement of plaintiff's patent, and also the damages sustained by Gordon by reason of such infringements.

Judgment was so rendered (R. 1365-68).

Gordon's award of the Petitioner's profits in this equity proceedings was in exact conformity with the pro-

visions of Section 4921 R. S. (35 U. S. C. A. §70). That statute provides:

> "Upon a decree being rendered in any such case for an infringement the complainant shall be entitled to recover, in addition to the profits to be accounted for by the defendant, the damages the complainant has sustained thereby, and the court shall assess the same or cause the same to be assessed under its direction."

In sustaining the Master's finding to the effect that Ford enjoyed a savings from its infringement of the Gordon patent the Court of Appeals held that the Master's finding was "supported by the overwhelming weight of the evidence." (133 F. (2d) 487, 494.)

The fruits of Ford's advantage in using Gordon's invention over what he had in using other processes then open to the public, and adequate to enable it to obtain an equally beneficial result, are the "profits" which Gordon is entitled to recover from Petitioner.

Mowry vs. Whitney, 81 U. S. (14 Wall.) 620, 650, 20 L. Ed. 860;
Littlefield vs. Perry, 88 U. S. (21 Wall.) 205, 22 L. Ed. 577;
Mevs vs. Conover, 23 L. Ed. 1008 (Footnote in 125 U. S. 144);
Cawood Patent case, 94 U. S. 695, 24 L. Ed. 238;
Black vs. Thorne, 111 U. S. 122, 28 L. Ed. 372;
Tilghman vs. Proctor, 125 U. S. 136, 31 L. Ed. 664;
Sessions vs. Romadka, 145 U. S. 29, 36 L. Ed. 609;
Horvath vs. McCord, 100 F. (2d) 326 (C. C. A. 6).

Petitioner's infringement in this case extended from the date of the issuance of the patent (June 16, 1925, R.

2) to March 16, 1931 (R. 16). During that period of time its infringement was colossal, and Petitioner turned substantially all of the cam shafts which it manufactured for its T models, its A models, and its Tractor models, being respectively as follows:

Model-T—3,420,166;
Model-A—4,306,504;
Tractor shafts—275,664 (R. 95).

The amount of the savings, gains, and advantages (profits) which the Petitioner enjoyed and received as a result of this infringement was clearly proved to the complete satisfaction of the Master, the District Court, and the Court of Appeals. As pointed out above, the amount of the profits found by the Master was affirmed to the penny by the Court of Appeals. Since Gordon proved these profits to the satisfaction of the Master and the reviewing Courts, he was entitled to recover them under the statute.

Petitioner argues (Brief p. 22) to the effect that the only actual damages which Gordon suffered from any infringement of its patent by Petitioner would have been either lost sales or loss of its established royalty on sales that might otherwise have been made by it. On this branch of the case it is difficult to see why this line of argument is not totally beside the point. In equity, a patentee may waive the damages he has sustained; and he may then recover the actual profits realized by the infringer. *Tilghman vs. Proctor,* 125 U. S. 136; *Root vs. Railway Co.,* 105 U. S. 189.

In *Tilghman vs. Proctor, supra,* the Court states the rule as follows (pp. 143 to 146 incl.):

"The principal question of law now presented is as to the general rule that should govern the amount

to be recovered. The defendants contend that the plaintiff, having established license fees for the use of his patent, is not entitled to any gains and profits accruing to the defendants, in excess of those fees. The plaintiff contends that, as the profits to be accounted for exceed the damages, he has the right, waiving the damages found by the master, to have a decree for profits.

* * * * * *

"But upon a bill in equity by the owner against infringers of a patent, the plaintiff is entitled to recover the amount of gains and profits that the defendants have made by the use of his invention.

"This rule was established by a series of decisions under the patent act of 1836, which simply conferred upon the courts of the United States general equity jurisdiction, with the power to grant injunctions, in cases arising under the patent laws.

* * * * * *

"The reasons that have led to the adoption of this rule are, that it comes nearer than any other to doing complete justice between the parties; that in equity the profits made by the infringer of a patent belong to the patentee and not to the infringer; and that it is inconsistent with the ordinary principles and practice of courts of chancery, either, on the one hand, to permit the wrongdoer to profit by his own wrong, or, on the other hand, to make no allowance for the cost and expense of conducting his business, or to undertake to punish him by obliging him to pay more than a fair compensation to the person wronged."

In *Tilghman vs. Proctor, supra,* the actual damages, based on established royalties, amounted to $79,566.91, but under the decision of this Court the patentee recovered all of the profits of the infringing defendants in the amount of $266,153.86.

In passing, and in reply to Petitioner's claim that an established royalty of 10% of the selling price on the original Gordon machine was paid to the patentee (Petitioner's Brief, pp. 19, 22), Respondent points out that the Master found that Gordon ceased manufacture of Gordon machines prior to the issuance of its patent (R. 12). He also found that this so-called 10% royalty was paid by the Respondent to Mr. Gordon's company, the Production Machine Tool Company (R. 75; and R. 79); that these 10% payments were made by the Respondent to another, and not to the Respondent by purchasers of its machines, and such payments were made in the early years when Gordon was building up a business in the patent machine, and since Mr. Gordon had the chief financial interest in the paying company, they amounted, in a large measure, to a transfer of money from one pocket to another, and are not a conclusive guide to a reasonable royalty to be paid to the Plaintiff for release of its patent rights by user of infringing machines.

Petitioner's position (page 22) to the effect that actual damage resulting from lost sales is not damage inflicted by Petitioner (a purchaser of the infringing machines) is totally beside the point. Whatever bearing, if any, that fact may have on the question of Gordon's damages in an action at law, like the stipulations in the assignments referred to in *Elizabeth vs. Pavement Co.*, it affords "no defense to the Appellants, when called upon to account for the profits they have wrongfully made by pirating the invention." *Elizabeth vs. Pavement Co.*, 97 U. S. 126, 143.

Nor does it avail the Petitioner anything to confuse Gordon's rights to recover his damages, and Gordon's right to recover Petitioner's infringing profits. An infringer's profits and a patentee's damages are distinct from and independent of each other, and are governed by differ-

ent principles, and the one cannot be said to be the measure of the other in an accounting under §4921. *Beach vs. Hatch,* 153 F. 763. Of course this is perfectly obvious from a reading of the provisions of R. S. §4921. The statute provides for the recovery of damages the complainant has sustained "in addition to the profits to be accounted for by the defendant."

On the proofs offered in this case as to the extent of Ford's profit and the amount thereof, the Master and the Court of Appeals reached the same conclusion. Gordon is entitled to recover those profits.

(c) Response to Petitioner's argument 6 A (c) (Petitioner's Brief pp. 25-32). The alleged Gordon-Walcott settlement agreement:

(1) The simple and conclusive answer to this point is that there was no such "agreement," and there is no evidence to support a claim that there ever was such an "agreement" and the Master so found (R. 82). All the evidence is to the contrary. Not only is there no evidence to support the contention, but the burden was upon the defendant to adduce and offer such evidence.* *Not only is there no evidence, but the issue was never pleaded.* This should dispose of the whole question, for plaintiff could

---

*Hilditch vs. American Bumper Corp. (E. D. N. Y. 1926) 15 F. (2d) 451, 454;
General Electric Co. vs. Continental Lamp Works (C. C. A. 2d 1922) 280 F. 846, 850;
Bassick Mfg. Co. vs. Adams Grease Gun Corp. (C. C. A. 2d 1931) 54 F. (2d) 285;
Radio Corporation vs. Majestic Distributors (D. C. Conn. 1934) 6 F. Supp. 87, 88;
Watson et al vs. Smith, (C. C. 1881) 7 F. 350;
3 Walker on Patents (Deller's Ed.) 1984 § 681.

hardly have been expected to present evidence on an issue not made up, and on which defendant submitted no evidence.

We present the following without waiving our contention that failure to plead an issue and failure to submit any evidence to support the issue by one upon whom the burden rests ought to be conclusive and that we ought not to have to submit the following:

(2) The only mention in the record of such an agreement was a statement by one of the counsel for Gordon, in response to a question by counsel for Petitioner, that counsel for Gordon was not aware of any settlement made with the Walcott Company (R. 970). This is the only place the alleged "agreement" is mentioned in the record. This being negative, the proposition should end there if it does not end in the absence of issue and evidence.

(3) Although, as Petitioner points out, Mr. Gordon, the President of the Gordon Company, and the *alter ego* of the Gordon Company, was on the witness stand time and again, not only throughout the main case, but throughout the accounting proceedings, no question was ever asked Mr. Gordon about such an agreement, and he was the one who would have known about such an "agreement" if there had been such an "agreement." Moreover, it would have been easy for defendant to have produced a representative of the Walcott Company to prove the existence of such an agreement if, in fact, there had been such an agreement. This brings us to the rule that where a party fails to produce the best evidence, particularly when so readily available to him, and no excuse is offered for not producing such evidence, the conclusion is that the evidence would have been unfavorable to the defendant *(Interstate Circuit vs. U. S.,* 306 U. S. 208, 226; *Mueller vs. Glauber,* 184 F. 609,

618, 619 (C. C. A. 7), and the numerous cases cited in these two authorities).

(4) From what Petitioner says at the top of page 26 of Petitioner's brief, it is very plain that there was no such agreement. As Petitioner points out, over a month after the date of this alleged agreement, the Walcott Company wrote to the Ford Company saying that there was then a *"plan* for the purchase of the Gordon & Redlin patent which will eliminate any costs or damages to the Ford Motor Company." It is manifest that if there had been any such settlement agreement as the Petitioner contends, the Walcott Company would, in this letter, have assured the Ford Company that there had been such a settlement and would not have been advising the Ford Company that all that existed at that time was a *"plan"* to buy up the Gordon patent and eliminate any cost or damages to the Ford Motor Company." This is conclusive evidence that the Walcott Company, one of those alleged to be a party to this agreement, did not claim that there was any such agreement.

The more detailed facts are that the decree of the District Court, refusing an accounting for valid reasons, which we will state hereafter, but which constitutes the basis for alleging that there was such an agreement, was entered June 24, 1929. At that time the Ford Company owed the Walcott Company approximately Six Thousand Dollars on account. This the Ford Company refused to pay because the Ford Company recognized that it was liable to Gordon for the infringement. The Walcott Company was seeking collection of this Six Thousand Dollars which it is apparent the Walcott Company needed badly. If there had been any such settlement as Ford contends, the Walcott Company could have succeeded in collecting its Six Thousand Dollars by telling the Ford Company that there

was such an agreement. There being no such agreement, however, the Walcott Company did not say that there was such an agreement, but in order to induce the Ford Company to pay the Six Thousand Dollars, called the Ford Company's attention to the "plan" to effect such a settlement and thereby relieve the Ford Company from its responsibility for its infringement. Two things appear from this letter—first, that if there had been any such agreement, Walcott would have advised Ford because the letter plainly shows that Walcott recognized that it was because of the absence of such agreement that the Ford Company was withholding the Six Thousand Dollars and, second, the letter shows that at that time there could have been no such agreement because all that existed was a "plan" for such an agreement. If, of course, there had been such an agreement, then there would have been no need for and no "plan" to make such an agreement.

This "plan" was never concluded, so the liability of the Ford Company to Gordon, which both Ford and Walcott recognized in the letter, continued.

Petitioner concedes (P. B. p. 25) that what (if anything) was decided upon by Gordon and Walcott when the decree was entered "*does not appear from the record,*" thus confirming our statement that there is nothing in the record on the subject. Petitioner then proceeds to place its reliance on this assertion by Walcott in this letter to the Ford Company that Walcott had a "plan" pending to do in July, 1929 what Petitioner erroneously claims had already been done by Walcott more than a month before and which was, in fact, never done. The serving of Notice and the filing of the Bill of Complaint in the instant case is conclusive evidence that Gordon, the other party to the alleged "agreement," knew that there was no such agreement. Therefore, both of the parties to the alleged agree-

ment are on record to the effect that there was no such agreement. That the agreement was not pleaded in the Answer or in any subsequent amendment is conclusive that the Ford Company knew there was never any such agreement.

After the entry of the amended Final Decree in the *Walcott* case (R. 1670-1672), the Gordon Company brought suit not only against the Ford Company, but against a number of other users of the Walcott machine, including General Motors Corporation, the Packard Company, Chrysler, and others. If there had been any such agreement as Ford contends for here, such would have been a defense to the claim in all of these suits, including the Ford suit. Neither the Ford, nor any other one of these infringers, pleaded such a defense. If there had, in fact, been an agreement the Walcott Company under the warranty agreement (Ex. 296), would have advised each and all of these infringers that there was such an agreement and such a release. Yet the Walcott Company knowing, of course, that there was no such agreement, did not advise any of them that there was such an agreement, with the result that all of the users, except the Ford Company, settled with Gordon for the infringement resulting from the use of the Walcott machine.

Petitioner's claim that Walcott made an agreement with Gordon by which Gordon could collect more from Ford than from Walcott is fantastic and unacceptable because since Walcott had agreed to reimburse Ford for any sum Ford would be required to pay to Gordon (Ex. 296), Walcott would have been obligating itself to pay more to Ford than Walcott would have had to pay Gordon, since Walcott could not be required to pay Gordon anything for the first eighteen machines. In other words, if Walcott

owed Gordon x dollars, and Ford owed Gordon 10x dollars, an agreement which excused Walcott from paying Gordon x dollars would have, ipso facto, obligated Walcott to pay Ford 10x dollars. The Walcott Company was not so dumb.

(5) The Master rejected the claim that there was such an agreement (R. 82); the District Court agreed with him; so did the Court of Appeals though, as we have mentioned, that Court, in reciting the history of the case prior to reaching the merits, inadvertently stated as mere dicta the defendant's claim, though paid no heed to the same and based no ruling thereon.

(6) The claim of the Petitioner is predicated upon the following proceedings:

The mandate from the Court of Appeals in the *Walcott* case provided for an injunction, an accounting, and an award of costs. When the mandate was lodged in the District Court, it became the duty of counsel to prepare a Decree based upon the mandate and to agree to the form of the Decree and present it to the District Court. (These procedures, and some of those which we shall mention, are not specifically proven in the record, but we assume that the Court will take judicial notice of such common procedure and customs *(Brown vs. Piper*, 91 U. S. 37, 42; *U. S. vs. Ferger*, 250 U. S. 199, 204; *U. S. vs. Sinclair*, 126 F. (2d) 827 (C. C. A. 10); *U. S. vs. Stanolind*, 113 F. (2d) 194, 200 (C. C. A. 10); *Walling vs. Patton*, 134 F. (2d) 945 (C. C. A. 6)). Upon the presentation of the usual form of decree in such cases, it was "represented to the Court" by Walcott's counsel that Walcott was not financially able to respond to a money judgment for damage and/or profits. This appears in the decree entered by the District Court who said in the decree (R. 1671):

"(6) It being represented to the Court that the Defendant is not financially able to respond to a money judgment for damages and/or profits,".

The Court then refused to award an accounting, saying (R. 1671):

"no accounting is ordered, but on the contrary it is ordered that the Plaintiff recover of the Defendant *nominal* damages in the sum of One Dollar ($1.00), without reference to a Master."

This is the usual procedure and the usual form of order in such cases.

The general rule that a Court will not order a futile thing is so well established and known that we need not cite authority on the subject. This rule has been applied in many cases where it is apparent that not only would the order of an accounting be futile, but the cost of the accounting would exceed it *(Fetzer & Spies vs. I. T. S.,* 260 F. 939, 947 (C. C. A. 6); *Perkins vs. Yost,* 189 F. 625 (C. C. Ohio); *Tucker vs. Dallas,* 286 F. 754 (D. C. Texas); *Hewes vs. Gay,* 11 F. (2d) 165 (D. C. Conn.); *Merriam vs. Ogilvie,* 170 F. 167 (C. C. A. 1); *Merriam vs. Saalfield,* 198 F. 369, 371 (C. C. A. 6)).

Counsel for Gordon could not deny the statements of counsel for Walcott regarding the financial inability of Walcott because these statements were true. Counsel for Gordon could not prevent the Court from entering the Decree that the Court entered. Gordon, and counsel for Gordon, were powerless to prevent the Court from refusing to order an accounting, Gordon, and counsel for Gordon, could not prevent the Court from limiting the damages to *nominal damages* of One Dollar. Indeed, as counsel for Gordon well knew, the Court was conforming to the law in entering such an order under such circumstances. What

is contained in this Section 6 of the Decree which we have quoted above was not the choice, the agreement, or the election of Gordon or counsel for Gordon, but the Order of the Court.

The Court ordered the issue of the injunction and made an award of costs which were agreed upon by the parties in the sum of Four Thousand Dollars which, as the record shows, was not in excess of Gordon's actual costs if, indeed, it was sufficient to cover those costs (R. 971).

The Court, of course, did not prepare the Decree itself. It followed the usual proceedings and left the burden of preparing a Decree embodying the Orders of the Court upon counsel for Gordon in accordance with the usual practice. Since it was plaintiff who was asking for the entry of the Decree upon the Mandate, counsel for Gordon had no other course than to prepare the Decree to incorporate the Court's orders, as shown in the decree (R. 1670-1672). Of course, as is usual and customary, counsel for both sides agreed to the *form* of the Decree ordered by the Court. To have done otherwise would have been captious. Such is the testimony on the subject (R. 970-971).

Thus is there not only no evidence to support the claim that there was any such agreement, but the evidence in the record shows that there was no such agreement and the Decree entered by the District Judge (R. 1670-1672) in connection with the evidence on the subject (R. 970-971) shows that not only was there no "agreement," but that the refusal of the accounting and the limiting of the recovery to One Dollar *nominal damages* was the Order of the Court which Gordon, or his counsel, was powerless to prevent. Moreover, under the authorities which we have cited, we found "after investigation" (R. 970) that the District Court was correct in these proceedings and it

would, therefore, have been futile to challenge his ruling or his Decree either in the District Court, the Court of Appeals, or in this Court. Therefore, did Gordon not only not agree to such a proposition, but Gordon was powerless to do anything but accept the ruling of the Court. But neither Gordon, nor counsel for Gordon, agreed to more than the form of the Decree.

It would be just as reasonable to contend that John Brown agreed to the Order of the Virginia Court condemning him to be hung, or that Joan D'Arc agreed to the findings of the Tribunal which tried her, or that Sacco and Vanzetti agreed to their sentences, as to contend that the Gordon Company agreed to the terms of the section of the Decree in the *Walcott* case relating to the accounting.

(7) We recognize that the Court cannot accept statements of fact by counsel or accept the word of one counsel as against the other, but counsel for the Ford Company have made statements of fact regarding this agreement which are not supported by the record, and if this Court is going to consider them, we ask the Court to accept and consider the statement which we now make to the effect that counsel for Walcott approached counsel for Gordon in an attempt to make such an agreement, as counsel for the Ford Company says was made, and that counsel for Gordon refused such a proposal. Such attempt, therefore, failed, and no such agreement was ever made.

(8) What Petitioner's counsel contend for amounts to this, and nothing more:

Collateral to the Decree, but not of record in this case, there was an oral agreement between counsel for Walcott and Gordon—not between Walcott and Gordon, but between counsel for Walcott and Gordon—whereby counsel

for Gordon accepted Four Thousand Dollars for Court costs, which costs, the record shows, were probably more than that, and One Dollar for the infringement amounting to many hundreds of thousands of dollars. There is not one word of writing, and no contention that there is one word of writing, in the record—or one oral word, for that matter—which supports such a claim. The Court is asked to hold that notwithstanding the absence of anything in the record to support the proposition that the Ford Company be released from its statutory obligation merely because counsel for the Petitioner contend that there was such an oral arrangement between counsel for Walcott and Gordon, which counsel for Gordon deny.

Petitioner then proceeds to shed many crocodile tears for the public because the Statutes make the user-infringer liable to the inventor for his infringement, and asks the Court to emasculate the Statutes and limit the Patentee to the maker for recovery. The dark and gloomy picture which counsel attempt to paint has not appeared in these more than one hundred and fifty years last past.

Wherever it has appeared to the user that there was danger of infringement by use, the user has always made a warranty contract against infringement with the maker, such as the one Ford made with Walcott with respect to the infringing machines and appearing at page 1610 of the record (Ex. 296).

The danger to the public in the instant case would be in the acceptance by this Court of the contentions of Petitioner and making a ruling based upon the statements of counsel which are not supported by the record, and by making a ruling that the Court will infer, in the absence of all evidence, that counsel for the parties, who did no more in the premises than agree to the *form* of the judgment, had

entered into a binding agreement which bound their clients and which resulted in the waiving of hundreds of thousands of dollars of just and righteous claims of the client. If such were the law it would be impossible even to consent to the form of a decree or judgment, much less make a statement, and such a situation would be very disastrous to the public.

There are the usual pleas of mulcting which the infringer makes against the execution of the Statutes awarding a recovery to the inventor for infringement. While there is no foundation for these claims, it is interesting to note that the Ford Company has the right under its warranty contract (Ex. 296) with the Walcott Company to recover from the Walcott Company the amount of the judgment in the instant case if, as counsel for Petitioners assert, the Walcott Machine Company has continued in business (pp. 20-21 of the Ford Petition for Certiorari).

Nor can it be contended that Gordon elected to proceed against Walcott for the machines used by the Petitioner, if that made any difference, because, as we have shown, the machines used by the Petitioner were not included within the machines covered by the Walcott suit.

It results that the true question presented by the Petition is:

Can the Patentee's statutory right to collect from the user for infringement by the user be defeated by the refusal of the trial court to award an accounting against the maker and limiting the award against the maker to one dollar nominal damages for a period not including the Ford machines?

No evidence was suppressed: On page 27 of Petitioner's brief the Respondent is falsely charged with suppressing facts regarding the inefficiency of the embodiment of the

Gordon invention, illustrated in the Gordon patent, to turn certain non-geometric forms commercially, including those at the Jackson Motor Shaft Company and the plant of the International Harvester Company, and with further misleading the Court of Appeals in the Sixth Circuit into believing that the Gordon machine was the first to turn the pear-shaped cam on the cam shafts. This proposition was urged without success on all the Tribunals in the Patent Office and on all of the Courts.* This is reflected, first, in the decision of the Court of Appeals in the District of Columbia in *Melling vs. Gordon,* 4 F. (2d) 945, 946. The first contention was that the Gordon machine was inoperative because of the inability of the embodiment illustrated in the Gordon patent to machine all kinds of non-geometric forms without modifying it to adapt it to variant forms. The Court discussed the subject at length in the second column at page 946. The proposition was again urged upon Judge Westenhaver (*Melling vs. Gordon,* 14 F. (2d) 437). Judge Westenhaver discussed the question, calling attention to the fact that it had been urged unsuccessfully throughout the Patent Office proceedings and in the Courts in the District of Columbia, concluding with the following statement at page 438:

> "The additional evidence now presented clearly establishes not only the operative character of Gordon

---

* The Gordon machine at the Jackson Motor Shaft Company was also used for turning the Ford tractor cam shaft (R. 1191); Ford at no time, at the Ford plant or elsewhere, ever made any effort to use the Gordon machine on either the T. model shaft or the A model shaft. Gordon recounted before the Patent Office and in all of the other litigation in this matter the sale of one of his machines to the International Harvester Company; while Gordon had no knowledge of the actual experience of his machines at the International Harvester plant (R. 1199) and International's experience was not before the Patent Office or these courts, that evidence is but cumulative.

& Redlin's apparatus, so much debated in the Patent Office, *but fully establishes its commercial practicability and acceptance in industry.*"

The proposition was again urged in the Walcott Case and the Court of Apeals in the Sixth Circuit devoted part of its opinion to a discussion and rejection of the proposition, mentioning the performance of the Gordon machine at the Jackson Plant (32 F. (2d) 58-59):

> "It is in evidence that Melling, the designer of defendant's machine, was called upon as an expert in mechanics to inspect one of the complainant's machines in operation at the plant of *the Jackson Motor Shaft Company.* Upon arrival he found that the tool left 'a lump on the work just below the nose of the cam' by reason of the rapidity with which the tool oscillated on turning the nose, and that the noise and jar of the bell crank lever falling upon the cam controlling this motion was such as to convince him that the design was impractical."

The same proposition was again urged and rejected in the instant case and, notwithstanding the evidence thereon, the Court of Appeals in the Sixth Circuit again held that the Gordon patent was a pioneer patent.

It is likewise false to charge that Gordon suppressed any evidence regarding the Ford shaper. This device and information concerning it was before the Courts below from the beginning to the certain knowledge of counsel for Petitioner.

The fact is that the Ford cam shaper was referred to in the first litigation under the Gordon patent (*Melling vs. Gordon Form Lathe Co.*, 14 F. 2d 437) to all of which the attention of petitioner has been frequently called and is therefore well known to petitioner. In that suit proof was offered concerning that Ford Cam-shaper and how it worked. This testimony was read into the record in the instant case (R. 292-296). That testimony was given in

1926. The fact is also that others engaged in the industry knew that the Ford Company was using Ford camshapers (R. 303) and Jones, of the White Motor Company, saw them in operation in the Ford plant in 1926 (R. 301). When the instant case was tried on the merits, the Ford camshaper and its operations were described at length; and the court below in sustaining Gordon's patent stated (87 F. (2d) 390, 391):

> "Even brief discussion of all the asserted new prior art in the present record would unduly extend this opinion. Full consideration thereof brings conviction of its insufficiency to warrant modification of our previous conclusion that the patentees were pioneers in disclosing means for oscillating the tool in synchronism with its reciprocatory movements and the revolution of the work by the use of an appropriately shaped cam, moveable frame, and bell crank lever tool support for use in cutting non-geometric forms and that the Walcott machine is an infringement."

These false charges, repeatedly made when they were known to be false, impelled the Master to comment that though the defendant made charges of a serious nature, "I have found them not well founded" (R. 93).

Even if evidence regarding this Ford shaper, the Jackson machine, the International Harvester machine, and other evidence falsely charged to have been suppressed, had not been before the Courts all through the litigation, there was no legal obligation on Gordon to furnish this information, especially when it was known to the defendants in the various litigations, and since, as all the Courts found, it is immaterial to any issue involved (*Toledo Scale vs. Computing Company,* 261 U. S. 399, 423).

The plain facts are that all of this evidence was not only well known, but was submitted to the Courts and the contentions here raised with respect to the same were re-

jected by the Courts for the reason that the evidence was immaterial to any issue involved in the case, a well established legal proposition which Petitioner has consistently refused to accept and now seeks to cover up by false charges of suppression. All of this evidence was collected and presented to the Court of Appeals in the Sixth Circuit in the instant case, and that Court, notwithstanding, reaffirmed its holding that the Gordon invention is a pioneer invention (R. Vol. V, p. 14; 133 F. (2d) 495).

Four things are apparent from these decisions: First, the charge that any of these facts were suppressed is false; second, the embodiment shown in the Gordon patent was not the flat failure that the Petitioner asserts but was, as the Court of Appeals in the Sixth Circuit said in the Walcott Case, merely "impractical" for the making of that particular kind of a cam, though highly practical and successful in making the kind of non-geometric cam it was specifically adjusted for; third, that the Courts held that the patented machine was the first to turn these cams in the face of and in full recognition of all of this evidence, and, fourth, that the embodiment of the Gordon invention included in the Gordon patent was highly successful in turning the particular kind of non-geometric form it was specifically adjusted to turn.

(d) Response to Petitioner's argument 6 A (d) (Petitioner's brief, pp. 32-34)—Respondent was prompt and vigilant in protecting its patent rights.

The Master found (R. 14-15) that no defense of laches was made by petitioner; and that there was no such neglect by Gordon of his patent rights as was present in those cases where laches was held a defense. Laches must be pleaded (Rule 8 F. R. C. P.) and laches was not pleaded.

The history of the Gordon litigation to sustain his pat-

ent rights, including all of his litigation with Melling and with the several automobile manufacturing companies whom he had to sue, as well as the present suit against Ford, overwhelmingly sustain the finding of the Master on this point.

As pointed out heretofore, the Master found that Gordon neither manufactured nor sold a machine of his make after the issuance of the patent to him (R. 12). Under these circumstances the rule is that Gordon therefore was required to give no notice to the defendant after the patent issued. *Wine Railway Appliance Co. vs. Enterprise Railway Equipment Co.*, 297 U. S. 387.

Prior to the issue of the Gordon patent, Gordon marked the numerous Gordon machines "Patent Applied For". This marking was on the Gordon machine which was at the plant of the Ford Company for sometime in 1924 where all could see the marking. When the Ford Company told Mr. Gordon that it would install and use the infringing Walcott machine, Mr. Gordon told the Petitioner that this machine embodied his invention and had already been held by the Patent Office to come within the patent claims which had been allowed Mr. Gordon in the application from which the patent issued. Mr. Gordon testified as to the time and place of this oral notice and the Ford Company never denied the notice or the other testimony relating thereto. As soon as the patent issued, Gordon mailed notices of infringement to each of those who were using the infringing Walcott machines (R. 1673). He was very particular to mail such a notice to the Ford Company because he was indignant at Petitioner's defiance of his rights and because he wished to confirm the oral notice which he had given. The notice which he mailed to the Ford Company was never returned by the United States mail authorities as were certain other notices which he mailed at the same time to those who had become extinct. The Ford Company never denied receiv-

ing this notice, although the Ford Company claimed that an investigation of certain of its records years after the notice was mailed did not develop the notice. Soon after the patent issued the litigation which had for its main issue the identity of the Walcott machine with the Gordon machine, the infringement of the Gordon patent claims by the Walcott machine, the inclusion of the Walcott machine within the metes and bounds of these claims, commenced and continued to general notice and knowledge up until at least after the rendition of a decision of the Court of Appeals in the Sixth Circuit in the Walcott case April 2, 1929. After this date Gordon served still another notice on Ford repeating the notice of infringement and adding thereto the decision of the Court of Appeals in the Sixth Circuit holding the Gordon patent valid and infringed by the Walcott machine and inviting settlement.

The Master also finds (R. 82) that by and large Gordon has taken the normal course in enforcing its patent rights. Melling commenced suit under R. S. §4915 against Mr. Gordon in Milwaukee before the patent issued to Gordon. This suit was dismissed by Melling. Two days later Melling then sued Mr. Gordon in Cleveland under R. S. §4915, 14 F. (2d) 437. Mr. Gordon prevailed in that action. Gordon then sued Walcott, the manufacturer of the infringing machines; and after the decision of the Court of Appeals in that case, 32 F. (2d) 55, April 2, 1929, he gave actual notice to Ford (June 12, 1929, R. 1684); and in that notice invited settlement. The Master found that Ford continued to use these infringing machines after this notice, up until March 16, 1931 (R. 16), in spite of the decision of the Circuit Court of Appeals in the *Walcott* case. The infringing machines which Ford was using were of identical design as the machine which the court of Appeals held infringing in the *Walcott* case. On November 18, 1930 counsel for

Gordon wired Ford to the effect that Gordon had settled with General Motors and other automobile companies, and notified Ford that counsel had been instructed to file suit against Ford, and proposed a conference with Ford's attorneys to discuss possibilities of settlement (R. 1525). This wire was delivered to Ford on November 18, 1930 (R. 1526). Ford was then still infringing, having purchased the last six infringing machines in the months of January to April, 1929 (R. 139). Ford remained silent in the matter, still continuing to infringe, and suit was commenced against it on December 3, 1930, praying for injunctive relief restraining the defendant from using or selling the infringing machines.

There is no laches present in this case. In fact, as the Master found, Gordon followed the normal procedure to protect its rights to its patent.

(e) Response to Petitioner's argument 6 A (e) (Petitioner's brief pp. 34-42) Birdsell vs. Shaliol, 112 U. S. 485.

It has been pointed out heretofore that Gordon made no compromise settlement or agreement with Walcott. The Petitioner's whole argument to the effect that *Birdsell vs. Shaliol,* 112 U. S. 485, does not apply in this case is predicated upon what it claims to be the rule to the effect that a release of one joint tortfeasor releases all the tortfeasors. Since there was no agreement, there was no release; since the Ford-Walcott machines do not fall within the Walcott accounting period, there was no release if there had been an agreement.

The rule in *Birdsell vs. Shaliol* is as follows (112 U. S. 485, 488, 489):

> "If one person is in any case exempt from being sued for damages for using the same machine for the making and selling of which damages have been recovered against and paid by another person, it can only be when *actual* damages have been paid, and upon the theory that the plaintiff has been deprived of the same property by the acts of two wrongdoers, and has received full compensation from one of them. In that view, the case of the patentee, whose right of property under his patent had been invaded, would be analogous to that of one from whom personal property had been taken."

Birdsell vs. Shaliol was cited by this Court as authority in 1921 in *Union Tool Co. vs. Wilson,* 259 U. S. 107, 113. The rule in *Birdsell vs. Shaliol* has been almost universally followed by the lower Courts.

See:

Westinghouse Electric Mfg. Co. vs. Mutual Life Insurance Co. of N. Y. (C. C. N. Y. 1904), 129 F. 213;

Electric Gas-Lighting Co. vs. Wollensak (D. C. Ill. 1895), 70 F. 790.

Fisher et al. vs. Consolidated Amador Mine (C. C. Cal. 1885), 25 F. 201;

U. S. Printing Co. vs. American Playing Card Co. (D. C. Mich. 1895), 70 F. 50;

De Laski & Thropp Circular Woven Tire Co. vs. Empire Rubber & Tire Co. (D. C. N. J. 1916), 239 F. 139.

Stebler vs. Riverside Heights Orange Growers' Ass'n., 214 F. 550, offers Petitioner no support for its contention in this matter. In that case the Court of Appeals reversed the decision of the lower Court and granted the patentee the relief claimed for; and thereafter an interlocutory decree was entered in the lower Court providing for an accounting. No proceedings were thereafter taken

by the patentee pursuant to that decree. However, the patentee, soon after the decision of the Court of Appeals and before the entry of the interlocutory decree in the lower Court, brought twenty-seven suits in equity against users of the machines manufactured and sold by the defendant in that case. The Court granted an injunction against bringing these suits and continued that injunction (214 F. 550, 556) "until the rendition of the judgment of the Court upon the Master's report on the accounting * * *." And the Court particularly pointed out (p. 553) that there is no controversy in the case as to the financial ability of the defendants to respond to whatever judgment may be finally rendered against them upon the final hearing of the case. The Court points out that the rule in *Birdsell vs. Shaliol, supra,* is in no respect inconsistent with the views of the Court. The decision of the Court in the *Stebler* case is probably grounded on general equity rule, that is, to prevent multiplicity of suits.

In the instant case, the decree in the *Walcott* case (R. 1670-1672) is to the effect that Walcott was not financially able to respond to a money judgment for damages and/or profits.

Nor does *Steam Stone-Cutter vs. Sheldons,* 21 F. 875, and its associated cases, support Petitioner's contention. In that case there was a decree against the infringing manufacturer, the decree being for profits on the sales. The decree was satisfied in part by the payment of money and in part by a levy on real estate. The execution for the enforcement of the decree against the manufacturing defendant had been returned satisfied, and the Court points out (p. 877) that the execution has not been revived as not actually satisfied. The Court finally holds (pp. 877, 878) that the return of the execution as satisfied is plenary evidence of its satisfaction while it stands. The decision of the Court in this case is not at variance with the rule in

the *Shaliol* case; but even if it were, it precedes the decision in the *Shaliol* case by about three months. In the *Steam Stone-Cutter Co.* case, the Court found that the patentee had received full recovery against the infringing manufacturer. This is not so in the Gordon case against Walcott.

The Michigan Law Contention: Petitioner is again wrong on the (1) facts and (2) the law.

(1) Petitioner finds that it is not enough to visualize a compromise agreement out of the whole cloth and then visualize the terms thereof also out of the whole cloth, but Petitioner finds that it must, to attempt to avoid the ancient and honorable doctrine reannounced by this Court in *Birdsell vs. Shaliol, supra,* visualize in addition and also out of the whole cloth *an effecting in the State of Michigan* of this hypothetical agreement employing these hypothetical terms. All is visioned; none is real and none is supported by the record.

There is only one analogy, but that is very illustrative:

One of the early minor American Evangelists was in the habit of charging that the devil hung his arguments on a sky hook which was anchored in a zero with the ring filed out.

Here Defendant hangs its contention upon the sky hook of the visualized compromise agreement which is anchored to the zero of the visualized terms and the zero is filed completely out when it is necessary to visualize that the hypothetical agreement with the hypothetical terms *was effected* in the State of Michigan in order to attempt to dodge the rule of general law—not patent laws only—an-

nounced and followed by the other courts in decisions ancient and current, including *Birdsell vs. Shaliol.*

The Michigan authorities cited by Petitioner (its brief, p. 37) indicate that the rule in that state is that where one having a cause of action against several joint tort-feasors, settles with some of them and discharges others from liability, the others are released. *McBride vs. Scott,* 132 Mich. 176, 93 N. W. 243; *Sunlin vs. Skutt,* 133 Mich. 208, 94 N. W. 733. The law in Michigan is no different on this point than is the rule followed in the Federal Courts. In *MacDonald vs. Henry Hornblower & Weeks,* 268 Mich. 626, 256 N. W. 572, the Court states:

> "The law of joint tortfeasors has been the subject of many refinements of reasoning and much conflict of opinion. 27 A. L. R. 805; 50 A. L. R. 1057; 65 A. L. R. 1087; 66 A. L. R. 206; 26 R. C. L. 765. The underlying principle is that the tort is single and the cause of action indivisible and exists against all feasors or none. The English rule was that action against one, pursued to judgment, was a bar to action against the others. The doctrine approved by the weight of authority in this country is that the injured party is entitled to actual satisfaction for the wrong; and, although separate suits may be brought, judgment against one, until, satisfied, does not bar suit against others. Such is the rule in this state. Verhoeks vs. Gillivan, 244 Mich. 367, 221 N. W. 287, 65 A. L. R. 1083."

The rule in the Federal Courts is that set forth by Judge Kenyon in *Dowagiac Mfg. Co. vs. Deere & Webber Co.,* 284 F. 331, where Judge Kenyon states the rule (p. 337) as follows:

> "The rule as to joint tort-feasors is elementary that, where there has been a complete recovery against one joint tort-feasor and satisfaction of the same, there cannot be recovery for the same thing against the others. The doctrine is based on the

theory that plaintiff is entitled to but one satisfaction for his injury. It is well established in the United States Courts that, to operate as a release of one joint tort-feasor, a judgment against another tort-feasor must be satisfied. There can be as many judgments as there are tort-feasors, but there can be only one satisfaction. The prevailing doctrine is well established that separate suits may be brought against joint wrongdoers. One suit is not a bar to the other, until there is satisfaction of judgment."

There was no complete satisfaction by Walcott to Gordon. Judge Kenyon was very careful to point out in *Dowagiac Mfg. Co. vs. Deere & Webber Co.* (p. 338) that the rule applying in cases where judgment for damages and satisfaction thereof has been had does not apply to the recovery merely of *nominal damages.*

Petitioner apparently concedes that *Birdsell vs. Shaliol* is applicable here. Otherwise, Petitioner would not have sought to render that rule inapplicable, as Petitioner does (Petitioner's brief, p. 37 et seq.) by reference to the Michigan cases. Upon analysis of these cases they state no different rule from that of *Birdsell vs. Shaliol.*

Petitioner's argument on this branch of the case must fail. It is grounded on a release of one of two tortfeasors accomplished through some sort of a compromise agreement. There was no such compromise agreement, nor was there any such release. The case of *Wagner Sign Service vs. Midwest News Reel Theatres,* 119 F. (2d) 929, cited by Petitioner likewise does not aid the Petitioner on this branch of the argument. In that case the manufacturer gave a supersedeas bond on its appeal from judgment on infringement. The Court treated that bond as (p. 931) an assurance to Wagner

"that if finally successful in his litigation, he would be fully compensated for all damages and profits

occasioned by the manufacture and sale by Adler of the infringing device, to the time of final accounting."

Consequently, the patentee in that case could not be injured by any failure to recover full damages and profits because the bond covered that, as the Court pointed out. That was not the situation in the *Walcott* case.

B.—Point 2—On the proposition that an infringer is liable for actual and not possible gains.

(a) Response to Petitioner's argument 6 B (a) to (d) (Petitioner's brief pp. 43-55)—Petitioner was entitled to no deduction for the alleged straightening operation.

The claim of the petitioner to the effect that there was a compromise agreement reached between Gordon and Walcott is predicated upon an excerpt from the decision of the Circuit Court of Appeals, which excerpt was not material to the decision of that court and which did not relate to Petitioner's infringing machines; and this claim was asserted even though the Court of Appeals affirmed the lower court and the Master's findings to the effect that no such settlement was made.

Like the petitioner's claim with respect to this alleged compromise agreement with Walcott, so also with its alleged claim that it is entitled to a deduction for a straightening operation, it seizes upon (its brief, p. 44) para. (1) of the Master's summarization of the evidence relief upon in support of the claim. Petitioner points out that the Master's summarization under point (1) is incorrect (Petitioner's brief, p. 48).

The Master, in stating the issue on this straightening operation, correctly states petitioner's claim ahead of his

summarization of the evidence. This statement appears (R. 40)—

> "The issue as to straightening is an important one, since it is largely responsible for the difference between the loss found by defendant from the use of the Walcott lathes on the Model T shaft and the profits in excess of $40,000 claimed by plaintiff. It appears that at several points in the manufacture of a camshaft the shaft becomes slightly crooked, and it is necessary to straighten it before performing certain operations upon it. Consequently, there have always been several straightening operations in producing a camshaft, but the claim here is that an extra one immediately preceding the cam-machining operation was required with the Walcott lathes, which was not necessary with the shaper. The evidence relied upon in support of this claim can be summarized as follows: (1) the fact that such operation appears upon the only time study for the *shapers* in evidence taken in 1924 is omitted from a time study taken later in the year after installation of the *Walcotts;*" (Italics ours.)

The Master found that the straightening operation was performed on the infringing Walcott machines. He finds (R. 41)—

> "I therefore reject this operation as an element of the cost of using the infringing machines, *not on the ground that it was not added upon their installation (because I think it was),* but rather on the ground that its addition was not attributable to differences between the two machines." (Italics ours.)

The Master's misstatement in summarization of the evidence, before he reaches his finding in this matter, and after he had correctly stated the petitioner's claim to the effect that the straightening operation was required on the infringing machines, is wholly immaterial. The Court of Appeals correctly understood the position of the parties in this case. The Court of Appeals understood that the Mas-

ter had found on the evidence that this straightening operation was added about the time the infringing machines were put into use. The Court of Appeals states (133 F. (2d), 487, p. 498)—

> "The Master found that the Ford Company used an additional straightening operation on the shafts after it began using the infringing Melling-Walcott machines, * * *."

This recital of the Master in the summarization of the evidence is wholly immaterial in this case since the Master found the fact *in favor of the petitioner with respect to the addition of the straightening operation.* The finding of the Master and the courts that denied the petitioner's claim in this branch of the case was the Master's *finding that the additional straightening operation was not occasioned by reason of the differences inherent in the two machines; but was added by the petitioner to improve the workmanship on the product.*

Nothing could better evidence the wisdom of the rules and practice to the effect that a reviewing Court will not disturb the concurring findings of fact below supported by evidence than the highly technical discussions relating to machines and accounts at pages 46 to 55 of Petitioner's brief. These technical questions of facts and accounts were gone into very carefully by the Master who saw and heard the witnesses and the exhibits; all were decided against the Petitioner by the Master by the District Court and the Court of Appeals.

The Court of Appeals discussed this straightening issue and affirmed the lower court and the Master in denying petitioner's claim for a deduction on account of this straightening operation. The Court's discussion is set forth in 133 F. (2d) 487. The Court states as follows (p. 498):

"The Master found that the Ford Company used an additional straightening operation on the shafts after it began using the infringing Melling-Walcott machines, and that the labor cost thereof was the amount claimed by the Ford Company in its accounts but he found that the additional operation was not attributable to the difference between the use of the infringing machines and the shaper. The witnesses for the Ford Company testified that the infringing machines could have been made to operate precisely as the shapers with the installation of steady rests, which would have eliminated the additional straightening operation. The item here claimed, if allowed, would largely make up the loss which the Ford Company insists it sustained by the use of the infringing devices instead of the shaper, and it is a fair presumption if its contentions are sound, it would have preferred to use the shaper rather than the infringing device.

"Every reasonable presumption is in favor of the Master's report as to profits made by an infringer based on oral testimony and his report is not to be set aside unless error clearly appears. We find no such error."

In asserting its right to deduct the cost of this straightening operation from the profits it received by reason of its use of the infringing machines, the petitioner argues that this straightening operation was actually used with the infringing Walcott machines but was not used with the Ford cam shapers. The petitioner also argues that this straightening operation was added because of the different characteristics of the two machines. Relying on the rule in *Tilghman vs. Proctor,* 125 U. S. 136, 146, to the effect that the infringer is liable for actual but not possible gains, the petitioner takes the position that it is entitled to a deduction for its alleged straightening operation.

The difficulty with petitioner's position on this issue is that it did not prove to the satisfaction of the Master or the

Lower Court or the Court of Appeals that this alleged straightening operation was added because of its use of the infringing machines. Its proof fell far short of meeting this burden.

Petitioner's claim is that it did not have to straighten the T-shafts before they were machined on the old Ford cam shaper, and that it had to straighten the T-shafts before these shafts could be machined on the infringing Walcott machine. *This claim for a deduction is an afterthought; the claim was injected into these accounting proceedings only after the Petitioner had filed its first account.* All during the main trial in this case petitioner praised these infringing Walcott machines and took the position that they functioned perfectly. When petitioner filed its original account in this matter, in answer to Q. 34 (R. 144) propounded by the Master, no claim of deduction was made, for this straightening deduction. The petitioner thereafter employed some certified accountants who were not at all familiar with the petitioner's business, and these accountants "dug up" two operation or time sheets, the first being Petitioner's Exhibit M (R. 1432-1433). This operation sheet is dated April of 1924, and the shaping operation on the Ford cam shaper is listed as operation No. 12. There is no straightening operation there listed as preceding this operation. The next operation sheet that these accountants found in Petitioner's Exhibit N (R. 1434-1435), which is dated October 10, 1924, and operation No. 13 there listed is termed "Turn Cam Lathe." This operation sheet has a straightening operation listed immediately preceding the turning operation, the straightening operation being No. 12. On the strength of these two operation sheets, together with the evidence with respect to the fact of straightening, which some of the petitioner's witnesses gave to the accountant, the petitioner amended its account, and in re-

sponse to Q. 34 it gave an amended answer (R. 164) in which the petitioner claimed that a straightening operation was required prior to the turning operation on the infringing machines.

The right to this claimed straightening deduction depended upon what the fact was as to the necessity of adding this operation because of petitioner's use of the infringing machines. The petitioner claimed it had to add this operation because of its use of the infringing machines. Here, then, was a question of fact which was sharply disputed.

The Master pointed out the error in Aptekar's testimony (R. 555) when the Master stated:

> "When you straighten the shaft in a press, you press it in the other direction, you get a bow opposite to the one you have in the crooked shaft and then it springs back to normal."

Aptekar admitted this. The Master then pointed out that you did not get that effect in a shaper because the most the pressure could do would be to press the cam shaft down on the steady rests while it was being cut and that upon release of the pressure the shaft would spring right back to the bow shape again. Aptekar admitted this (R. 555).

Pioch's department was never consulted about the straightening required (R. 672). He also testified that straightening would also cut down on the grinding time and result in fewer shafts being scrapped (R. 673), and in response to a question of the Master, Pioch testified that the addition of this straightening operation would have resulted in a better product which would have satisfied consumers of the petitioner's machines to a greater extent than before (R. 673). Pioch also testified that the tolerances on petitioner's A production were much more rigid than on the T production (R. 673). Pioch also testified (R. 703) that there were a lot of improvements made during the time

petitioner was producing T-models; and that from 1909 to 1923, while petitioner was producing the T-model (R. 703) there were changes in tolerances.

Aptekar testified (R. 555) that the shaft was as crooked after it had been shaped on the Ford cam shaper as when it was put in.

Gordon testified that the same requirements for straightening existed in any kind of a machine that was going to form the contour of the cams (R. 1205-6); and that there was no more occasion for straightening the shafts for one machine than there was for straightening them for another machine. He pointed out (R. 1207) that unless the cutting tools in the shaper were very dull, on the second cut they would not spring the work down in the shaper; and consequently the cams would not be concentric with the bearings (R. 1207).

Sloniker testified (R. 312) that to his knowledge, and he had worked on many cam shafts in different automobile factories,

> "Before a cam shaft goes to the grinding operation, or a rough turning operation, the shaft must be straightened."

Counsel for petitioner could not answer the question put by Judge Tuttle on the hearing before him on the exceptions to the Master's report. The question is this—If the shaft was bowed when it was put into the Ford cam shaper, how could the shaper tools exert pressure to straighten that shaft or hold it straight while cutting when the tools move longitudinally of the shaft, attacking the cams from the side, and at the beginning of the cutting stroke occupy the space between the cams and are not even in contact therewith? Assuming the shaft is bowed upwardly away from the steady rest, it is obviously a physical impossibility for the

tools at the instant they engage the cams, approaching them as they do from the side, immediately to force the upwardly bowed shaft down firmly on the steady rest. The tools will initially strike the cams with the shaft in its maximum bow shape with the result that the first portion of the cut will be heavier and deeper than desired, in many cases conceivably below the finished contour of the cam, and then as the tools continue the cut across the cams the full pressure will be gradually applied to the shaft, the tools taking a lighter and lighter cut and leaving the work at a higher point on the opposite sides of the cams. Judge Tuttle used his penknife to demonstrate the fallacy of defendant's position.

The Master heard all of this testimony. He observed the witnesses; he examined petitioner's operation sheets; and he carefully and painstakingly examined some of these witnesses, particularly Brush, Gordon, and Aptekar. After reviewing all this testimony, he makes the following finding (p. 41):

> "The conclusion I draw from this and other evidence not detailed here is that while the use of the Walcott latches may have been the occasion for adding the straightening operation, it was not the underlying cause for doing so, the operation being rather attributable to improvement in defendant's standards of workmanship. * * * *I therefore reject this operation as an element of the cost of using the infringing machines, not on the ground that it was not added upon their installation (because I think it was), but rather on the ground that its addition was not attributable to differences between the two machines.* I recognize the rule that an infringer need account only for actual and not reasonable profits (*Tilghman vs. Proctor, supra,* and many other cases); but in making a comparison between two types of machinery similar factors on both sides should be kept constant, and the actual operation of the in-

fringing machines should not be weighed against a theoretically ideal operation of the standard of comparison." (Emphasis supplied)

This issue on straightening is purely one of fact. There was a sharp dispute in the testimony as to the underlying reason for straightening. Under Rule 53(e)(2) of the Rules of Civil Procedure, this finding of the Master, as affirmed by the courts, should not be disturbed. That rule is "that in an action to be tried without a jury a court shall accept the Master's finding of fact unless clearly erroneous. * * *" The Court of Appeals followed this rule.

The Master's finding here, based on this disputed testimony, was accepted by the various courts after thorough argument. The petitioner here sought a deduction from the profits it made from the use of the infringing machines. In *Elizabeth vs. Pavement Co.*, 97 U. S. 126, a deduction was claimed for profits made on other work. The court says (page 142):

> "As this is not explained in any satisfactory way, we think the Master did right in rejecting it."

The Master was not compelled to substitute guesswork for petitioner's failure of proof. *Computing Scale Co. vs. Toledo Computing Scale Co.*, 279 F. 648, 677. With respect to all deductions, the burden was on petitioner. *Klooster, Patent Accounting,* states the rule as follows:

> "In the usual case the plaintiff discharges his burden of proof by showing the gross sales from the statement of account which the defendant has filed or otherwise, and, after considering cost of goods sold, by further showing that a profit was realized; *and the burden of proving deductions challenged by the plaintiff is upon the defendant.*" (p. 132)

On this branch of the case, petitioner's whole argument on its claimed right to this straightening deduction rests on its claim that the straightening operation was added about the time that it began to use the infringing machines. As the Court of Appeals pointed out, it is rather difficult to see why the petitioner did not go back and use the old shapers, if, as a result of this straightening operation, it lost money on the use of the infringing machines. Still it tenaciously clung to the use of these infringing machines all during the infringing period. The fact is that after petitioner bought the eighteen infringing machines in 1924, it was then occupying its Highland Park Plant. In November 1924 (R. 591) it moved from the Highland Park Plant to the Rouge Plant, and it put the shapers back in running condition at the Rouge Plant in 1924 (R. 591) to keep up production until it got these infringing machines shipped to the Rouge Plant and set up and running. If the fact is, as pointed out by the Circuit Court of Appeals, that the petitioner was losing money on the use of the infringing machines because of this straightening operation, why did it reinstall these machines after it went to the Rouge Plant in late 1924? Its own experience in this case is at variance with its contention now.

Petitioner had the burden of proving that this straightening operation was made necessary by the use of the infringing machines, *but the Master found* (R. 41) *that the operation was attributable to the improvement in petitioner's standards of workmanship.* It installed this straightenting operation in order to have better workmanship.

It would be just as logical here for the petitioner to claim a deduction from its profits which it received by reason of the use of these infringing machines under these assumed circumstances: Assume that about the time petitioner began the use of these infringing machines and during the

period of the patent, it decided to use a much higher priced steel than it had theretofore used, although the use of this steel was not essential or necessary by reason of the use of the infringing machines. It would be just as logical to claim a deduction for the additional cost of this steel as it is to claim the cost of the straightening operation here. Neither of them would be attributable to the use of the infringing machine.

C. Point 3—Apportionment.

What we have just said about the portion of Petitioner's brief on pages 46 to 55 applies to the entire discussion of Point 3.

From the repeated attacks in this section on the validity of the Gordon patent and the holdings of infringement, it is manifest that the entire discussion is no more than a vehicle to carry repeated challenges of the holding of validity and infringement of the numerous fact finding Tribunals and the numerous decisions below.

Time and again throughout this section Petitioner asserts that findings of the Master are "not in accordance with the facts," thus making plain that throughout the section the challenge is of facts found by the Master and approved by the District Court and the Court of Appeals.

Except in one instance there is no claim that the fact findings are not supported by evidence. Always the claim is that the Master's finding of fact on conflicting evidence is erroneous. The exception is the claim that there is no evidence to challenge the testimony of the Petitioner's professional expert that no advantages were due to the Gordon machine. This claim is but a repetition of the error that the Gordon invention is confined to the particular embodiment of the Gordon invention illustrated in the patent.

The law is, however, otherwise. The claims define the metes and bounds of the invention as this Court has held in decisions ancient and current. The infringing machine is still as much an embodiment of the Gordon invention as the machine illustrated and described in the Gordon patent, as we have pointed out elsewhere in this brief. This claim also flies in the face of the facts in that, as we have pointed out elsewhere in this brief, the embodiment of the Gordon invention illustrated in the patent was successful in turning many of the Ford cams and successful in turning all of those cams upon which it is said to have failed commercially except a very small part of the cam. Petitioner's professional expert merely adopted and followed the subterfuges of the Petitioner in the premises and which succinctly are insisting that the Gordon patent is limited to the embodiment illustrated in the patent notwithstanding the repeated holding of the Courts that the Gordon invention was a pioneer and that the Gordon patent is generic and entitled to liberal construction certainly broad enough to include the infringing machine, and, second, that because the embodiment of the Gordon invention shown in the Gordon patent was not capable of turning all kinds of non-geometric forms commercially it was a failure; in other words, in seeking to dam as a failure a pioneer invention merely because any and every embodiment of that invention is not capable of performing commercially to the satisfaction of Petitioner. Notwithstanding each of these propositions has been ruled upon by numerous Courts below contrary to the Petitioner's contention, the Petitioner here presumes to assume that these Courts are wrong and proceeds to present its contentions just as if all of these Courts were wrong on these points.

(a) Decision of the courts below on the apportionment question.

The Master, the District Court and the Court of Appeals denied Petitioner an apportionment of profits. Petitioner makes this claim here again for apportionment of the profits and damages. Petitioner's argument on this branch of the case is set forth in its brief on pages 55 to 78. On this branch of the case, the Court below stated as follows (133 F. (2d) 487, 493):

> "The present patent as heretofore found by this court in generic. 32 F. 2d 55, 58. Gordon and Redlin taught and gave to the industry a new method for shaping camshafts, which contributed substantially to the mass production of automobile engines. It is true that the Gordon-Redlin machine as originally described in their patent drawings and specifications had only a moderate degree of success in shaping camshafts for the Model A cars, because of the sharper points of the cams used in that model and it is equally true that Melling, a mechanic of considerable ingenuity and experience, acting on the Blanchard principle [32 F. 2d. 55, 59] improved the Gordon machine so as to make it operate with complete success.
>
> "There is such a thing as second-hand improvements. Some inventors, musing on the accomplishments of others, have unconsciously adopted their inventions as their own. Under these circumstances, the new conception is like the original but for which it never would have existed; still, it is sometimes sufficiently different from the original to be a new thing, not a reproduction of the old and it is a creation though so to say a suggested creation.
>
> "Melling was working to improve Gordon's machine and was successful, but his accomplishment was not a creation and was not sufficiently different from Gordon's to say that the fruit of Melling's mechanical tree was the only fruit that the Ford Company gathered. Melling's improvements were not

grafts on Gordon's patent tree, but only a limb upon it.

"The finding of the Master that the Ford Company enjoyed a savings from its infringement of the Gordon patent is supported by the overwhelming weight of the evidence. The Ford Company does not dispute the fact that it attained substantial savings in cost through the use of the Gordon machine with the Melling improvements upon it.

* * * * * * *

"In the case at bar, The Gordon Company proved that the Ford Company made profits by decreasing its manufacturing costs by using the patented machine and having shown this fact, the burden returned to the Ford Company to show that a portion of these profits was due to the use of a part of the machine not covered by the Gordon-Redlin device. This burden is met. To this point, the respective parties have carried the burden resting on each of them, but The Gordon Company having shown the commingling of profits by the Ford Company, and it appearing that the latter company failed to keep records or to supply evidence that would disclose what proportion of the profits arose from the infringing devices and what proportion, if any, from Melling's improvements, the burden again returned to the Ford Company which it has failed to carry and such failure creates an unavoidable liability. Horvath vs. McCord Radiator & Mfg. Co., supra."

The Court of Appeals then held that Gordon proved that the Ford Company made profits by decreasing its manufacturing costs through its use of the infringing machines; that the burden was on Ford to allocate and apportion those profits; and that it failed to make such apportionment. The Court refused to grant Petitioner any apportionment.

In this case Gordon proceeded exactly in accord with the procedure outlined in *Horvath vs. McCord Radiator & Mfg. Co.* (6th Cir.), 100 F. (2d) 326. In that case the Court, speaking of the burden of proof, stated as follows (p. 330):

> "The burden is on Horvath to prove that McCord made profits by the use of his patented machine, and having sustained it, McCord must then show that a portion thereof was due to the use of processes not covered by Horvath's patent, and if successful, it then devolves on Horvath to apportion the profits attributable to the use of his patented machines, or demonstrate by the weight of the evidence that such profits are so inextricably commingled as to defy apportionment. The burden then returns to McCord."

Gordon here followed that procedure. It proved Petitioner's profits resulting to it from the use of the infringing Walcotts. Under the rule above set forth, there then devolved upon the Petitioner the burden of showing, if it could, that a portion of those profits was attributable to the use of something other than Gordon's invention. This burden the Petitioner at no time assumed or fulfilled. It first tried to show that it derived no profits at all from the use of the infringing Walcotts, and it still maintains that position before this Court. In the alternative, Petitioner argued that if there were any profits, all of the profits were attributable to its use of something other than Gordon's invention. The Master well understood this position of the Petitioner and summarized this position as follows (R. 70):

> "• • • Defendant's evidence on the issue consisted almost wholly of expert testimony that, since the Gordon machine was not operable on the Ford camshaft, 100% of the value of the infringing machine to defendant was attributable to the Melling improvements. This does not seem to me to be a

> sound conclusion. * * * The error in this reasoning is that it confuses the whole with one of its parts; it evades the problem, as expressed in the *Cincinnati Car* case, *supra* (p. 594), 'quantitatively to allocate the joint product of two factors, each a condition to the result.' "

The Petitioner tried to do here exactly what the Defendant tried to do in *Flat Slab Patents Co. vs. Turner,* 285 F. 257, where the Court said (p. 282):

> "* * * It may be further noted that the offer of defendant was not to show what portions of a combined profit were due to these column heads but was to prove that all, or substantially all, of the profits was due to them. This was on the theory that the Norcross construction was commercially impractical without these so-called improvements. In short the issue would have been the virtual utility of the Norcross construction. The master and the court were right in refusing testimony on this point."

(b) to (f)—Response to Petitioner's argument 6 C (b) to (f) (Petitioner's brief pp. 56 to 78).

The so-called added features or "improvements" upon which Petitioner bases its claim for apportionment are claimed by Petitioner to be inherent in Melling's Patent No. 1,512,995 (Exhibit 312, R. 1640-7), relating to two-cut mechanism, and Patent No. 1,655,655 (Exhibit 209, R. 1558-66), relating to a change in the tilting of the tool.

The infringing machine which the Petitioner used during all of the period covered by this accounting is a machine of the identical type as the machine which was before the Court of Appeals in *Gordon Form Lathe Co. vs. Walcott Machine Co.,* 32 F. (2d) 55, as the Court pointed out in *Ford Motor Company vs. Gordon Form Lathe Co.,* 87 F. (2d) 390.

The Petitioner's claimed improvement with respect to Melling's change in the tilting of the tool formed the

principal basis of the Petitioner's claim for non-infringement in *Gordon vs. Walcott.* The Court there rejected that contention, saying (32 F. (2d) 55, 60):

> "In the Melling machine the pattern is a replica of the finished work, and the spring tension impels the frame toward the work, holding the guide plate firmly against the pattern. In the complainant's machine the work and pattern cam are on opposite sides, respectively, of the tool and the roller member controlling the reciprocatory movement. The spring urges the frame away from the work, thus holding the bearing tightly against the pattern cam. In the complainant's machine, therefore, the pattern cam is not a replica, but substantially the reverse in shape, to the pattern of Melling. The principles, however, are identical. • • •
>
> "The principle of the Blanchard lathe produced reciprocating movement only, which was inoperative to cut with a single tool a nongeometric figure upon the revolving work, unless the tool were also given oscillating movement to maintain the normal angularity of the tool to the work. *To produce this oscillation Melling turned to and appropriated the cam and bell crank lever construction of the complainant, thus producing the desired end by practically identical means used by Gordon.* • • •
>
> • • • • • • •
>
> "Tersely expressed, our opinion is that Melling accomplished the same result as Gordon, perhaps more efficiently mechanically, but nevertheless by the employment of substantially the same means, or their equivalents, operating in substantially the same manner. This has universally been held to constitute infringement, and we so hold."

Thus the Petitioner's claim, upon a fair analysis, for apportionment here, rests upon the same contention which was urged on and rejected by the Court of Appeals in the *Walcott* case.

Petitioner's position in this accounting does not differ essentially from the position of the infringing defendant in *Flat Slab Patents Co. vs. Turner,* 285 F. 257. The Court rejected that position in that case, and states (p. 282):

> "Defendant claims that all or part of the profits arose from the improvements made by him. • • • In the hearing on the interlocutory decree defendant urged these very features as distinguishing the old Turner construction from the patented construction. This court then held to the contrary. It is true that the court should not settle in advance, by the interlocutory decree, matters which are connected *purely* with the accounting and are not directly involved in the points then before the court. *But these features formed the backbone of the defense to the charge of infringement.* The court was compelled to pass upon their relation to the patent. • • • We cannot, in the accounting, revise this determination nor whittle down its practical effectiveness by declaring an excess in width of the rod belts, if there is such, as an 'improvement,' without the patent, for which no recovery can be had."

Gordon has consistently maintained that the Petitioner here is entitled to no apportionment of the profits it received from the use of the infringing Walcotts. Gordon maintains, as the Court of Appeals held, that Melling accomplished the same result as Gordon by the employment of substantially the same means or their equivalents operating in substantially the same manner; and that under the patent law, Melling's conception (as embodied in the infringing machines) and Gordon's are one and the same thing. It has been held in *Machine Co. vs. Murphy,* 97 U. S. 120, that (p. 125):

> "Authorities concur that the substantial equivalent of a thing, in the sense of the patent law, is the same as the thing itself; so that if two devices do the same work in substantially the same way, and accomplish substantially the same result, they are the

same, even though they differ in name, form, or shape. *Curtis, Patents* (4th ed.), sect. 310."

Petitioner's claim to an apportionment of the profits it received from the use of the infringing machines, to the extent that it rests on the same "change in the method of tilting the tool," rests on no firmer ground than did Melling's defense to infringement.

In *Westinghouse Co. vs. Wagner Mfg. Co.*, 225 U. S. 604, this Court formulated rules governing apportionment of profits. Those rules are (p. 614):

"(a) Where the infringer has sold or used a patented article, the plaintiff is entitled to recover all of the profits.

"(b) Where a patent, though using old elements, gives the entire value to the combination, the plaintiff is entitled to recover all the profits. *Hurlbut vs. Schillinger*, 130 U. S. 456, 472.

"(c) Where profits are made by the use of an article patented as an entirety, the infringer is liable for all the profits 'unless he can show—and the burden is on him to show—that a portion of them is the result of some other thing used by him.' *Elizabeth vs. Pavement Co.*, 97 U. S. 126.

"(d) But there are many cases in which the plaintiff's patent is only a part of the machine and creates only a part of the profits. His invention may have been used in combination with valuable improvements made, or other patents appropriated by the infringer, and each may have jointly but unequally, contributed to the profits. In such case, if plaintiff's patent only created a part of the profits, he is only entitled to recover that part of the net gains. He must, therefore, 'give evidence tending to separate or apportion the defendant's profits and the patentee's damages between the patented feature and the unpatented features, and such evidence must be reliable and tangible, and not conjectural or speculative; or he must show, by equally reliable

and satisfactory evidence, that the profits and damages are to be calculated on the whole machine, for the reason that the entire value of the whole machine, as a marketable article, is properly and legally attributable to the patented feature.' *Garretson vs. Clark,* 111 U. S. 120."

Under rule (a) Gordon is entitled to all the profits here, because the Petitioner used machines which this Court held infringed the patent in suit. Thus Gordon is entitled to recover all the profit.

Under rule (b) Gordon is entitled to all the profit, because the Gordon patent gave the entire value to the combination of the elements present in the Petitioner's infringing machine. The Gordon invention was a new combination of elements, and his patent specifies those elements in infringed claims. In *Gordon Form Lathe Co. vs. Walcott Machine Co.,* 32 F. (2d) 55, 56, the Court reproduced claim 2 of the Gordon patent, and found that all of the elements specified by that claim were present in the infringing machine; and when this case was before the Court of Appeals on the merits (87 F. (2d) 390), that Court also adopted its previous decision as to the elements constituting the invention and covered by the claims.

Under rule (c) Gordon is entitled to all the profits, because the Petitioner has not shown *"that a portion of them is the result of some other thing used by him."* "Some other thing used by him" must be something outside the patented combination. *Westinghouse vs. Wagner,* 225 U. S. 604, 617; *Sheldon vs. Metro-Goldwyn Corp.,* 309 U. S. 390, 403, 406; *Christensen vs. National Brake & Electric Co.,* 10 F. (2d) 856, 866; *Tuttle vs. Claflin,* 76 F. 227, 233; *Marconi Wireless Telegraph Co. vs. U. S.,* 63 S. Ct. Rep. 1393.

Rule (d) has no application to this case. That rule relates to cases where the patent is only for a part of the machine. Here Gordon's patent is for the entire machine.

Gordon maintains that an apportionment of profits is never decreed an infringing defendant because of a claimed improvement, where that improvement lies within the inhibited field of the patent. In order for an infringing defendant to be entitled to an apportionment of profits because of a claimed improvement, he must show, and the burden is on him to show, that he used something which he superadded to the patented combination. *Elizabeth vs. Pavement Co.*, 97 U. S. 126, 141. He may not show that he substituted but mechanical equivalents for some of the elements of the combination.

In *Christensen vs. National Brake & Electric Co.*, 10 F. (2d) 856, Judge Geiger pointed out what constitutes an "improvement" in a legal sense. He thus discusses the matter (p. 866):

> "Some contention arises over an alleged necessity of segregating profits made upon the infringing structure, the defendant claiming that in part they were attributable to its 'improvements.' *Speaking broadly, I assume that when an infringer claims to have 'improved' the patented structure, so long as he is still within the inhibited field of the patent—either as a whole or respecting any mechanical element or part of the structure—he is still infringing.* If by such 'improvements' he really betters, even beyond the contemplation of the patentee, but does not make a new or different structure in a legal sense; if he thereby promotes, no matter in how high a degree, its mechanical or commercial favor; if he thereby increases the gains and profits on an individual sale, or decreases them, but because of its greater favor with the public, increases production and thereby aggregate profits—he is still exercising the patentee's rights."

In *Tuttle vs. Claflin,* 76 F. 227, Judge Shipman stated this rule as follows (p. 232):

> "Upon the foregoing facts, the question of the rule of law in regard to the method of ascertaining the profits was not a debatable one."

and (p. 234):

> "* * * When the infringer uses in his infringing machine the essential part of the patented machine, without which his infringing machine is worthless, it is not an adequate answer to the demand for the payment of his entire profits that his substituted equivalents improved the work of the corresponding elements of the infringed machine."

This Court has epitomized this rule in *Sheldon vs. Metro-Goldwyn Corp.,* 309 U. S. 390 (a copyright case). In that case the Court says (p. 406):

> "In that aspect the case has a certain resemblance to that of a patent infringement, *where the infringer has created profits by the addition of non-infringing and valuable improvements.* And, in this instance, it plainly appeared that what respondents had contributed accounted for by far the larger part of their gains. * * *"

and states with respect to the *Westinghouse* case (p. 402):

> "* * * There, the Court was concerned with the question of burden of proof. It was said that the plaintiff suing for profits was under the burden of showing that they had been made. *The defendant had submitted evidence tending to show that it had added non-infringing and valuable improvements which had contributed to the making of profits;* and the plaintiff in reply had insisted that these additions had made no such contribution. But assuming, as had been found, that the additions were non-infringing, and valuable improvements, and a *prima facie* case of contribution to profits thus appearing, the burden of apportionment would rest upon the plain-

tiff. But in that relation it had still to be considered that the act of the defendant had made it 'not merely difficult but impossible to carry the burden of apportionment' and in such case, as the 'inseparable profit must be given to the patentee or infringer,' the law placed the loss on the wrongdoer."

In *Marconi Wireless Telephone Co. vs. U. S.*, 63 S. Ct. Rep. 1393, this Court again reiterates the rule which it adopted in *Westinghouse vs. Wagner, supra,* and *Sheldon vs. Metro-Goldwyn Corp., supra,* to the effect that in order for an infringing defendant to be entitled to an apportionment of profits or damages because of a claimed improvement, the "improvement" as such must be non-infringing. This Court states the rule thus (p. 1416):

"* * * The appropriate effect to be given to this testimony is important in the light of the recognized doctrine that if a defendant has added 'non-infringing and valuable improvements which have contributed to the making of the profits,' it is not liable for benefits resulting from such improvements. Westinghouse vs. Wagner Mfg. Co., 225 U. S. 604, 614-15, 616-17; Sheldon vs. Metro-Goldwyn Corp., 309 U. S. 390, 402-406 [44 USPQ 607, 611-613], and cases cited. Finding LXIII that the Government was using 'apparatus coming within the terminology of Claim 16,' and Finding 23 on the accounting that the accused devices 'infringe Claim 16 of the Marconi patent,' *give no aid in solving this problem for they are not addressed to the question whether, assuming infringement, the Government has made improvements which of themselves are non-infringing.* That can only be afforded by findings which appraise the evidence, establish the scope of Marconi's claim and the nature and extent of the difference in function, if any, between the device claimed by Marconi and those used by the Government, *and determine whether any differences shown to exist constitute a 'non-infringing improvement' for which Marconi deserves no credit.*" (Emphasis ours.)

The Court of Appeals applied the principles of the above cases in *Horvath vs. McCord Radiator & Mfg. Co.*, 100 F. (2d) 326, in which Court said (p. 330):

> "The burden is on Horvath to prove that McCord made profits by the use of his patented machine, and having sustained it, *McCord must then show that a portion thereof was due to the use of processes not covered by Horvath's patent* * * *."

The alleged difference in the method of tilting the tool in the Melling machine was but the equivalent of Gordon. As Judge Geiger pointed out, it does not matter how well the so-called "improvement" worked, if it does not constitute a different structure in a legal sense; and if it does not, the infringer is still using Gordon's rights as a patentee. As Judge Geiger so aptly put it *(Christensen vs. National Brake & Electric Co.*, 10 F. (2d) 856, 866):

> "* * * *Yet that was simply a means of promoting the infringement.*"

If it was essential here for Petitioner to use Melling's so-called "change in the method of tilting the tool," then that was but a means which enabled the Petitioner to utilize Gordon's invention, and hence to infringe.

With respect to the Petitioner's claim that Melling's Patent No. 1,512,995 (Exhibit 312, R. 1640-7), the two-cut mechanism, was an improvement and also entitled it to an apportionment: that mechanism, as the Master pointed out (R. 62), consisted of a mechanism for advancing the tools to take a second finishing cut on the cams without removing the shaft from the machine. It has been held *(Gordon Form Lathe Co. vs. Walcott Machine Co.*, 32 F. (2d) 55, 56) that claim 2 of the Gordon patent is valid and infringed. The last clause in claim 2 calls for "means for simultaneously causing relative movement between the

work holder and tool holder axially with relation to the work holder." This clause describes the mechanism which moves the shaft endwise against the cutting tools and covers completely the cutting mechanism of the Petitioner's machines. The Master so held, saying (R. 62):

> "* * * However, it would seem that the element in Claim 2 of the Gordon patent, as an example, 'means for simultaneously causing relative movement between the work holder and tool holder axially with relation to the work holder,' covers the means for doing this equally whether one or two cuts are taken."

There can be no contention that Claim 2 does not describe the Melling machine for Melling tried and failed to win that claim in the interference (14 F. (2d) 437).

It is indeed odd for the Petitioner to claim that this so-called two-cut mechanism is an "improvement" which requires an apportionment, whereas a one-cut mechanism would not be an improvement. *Every time a cut was taken on the Melling machine it infringed Gordon's patent. If the Melling machine required two cuts to be taken before the work was done, then there were two acts of infringement required to finish the job.* Petitioner's argument then, with respect to this two-cut mechanism, is that the greater the number of times the infringing machine is used to turn out a finished product, the greater the claim the infringing defendant has for an apportionment. If he infringed only once, he is entitled to no apportionment; but if he infringes two or more times, he is entitled to an apportionment. The mere assertion of such a claimed right to an apportionment denies the right to the claim.

The decision of this Court in *Lincoln Engineering Co. vs. Stewart-Warner Corp.*, 303 U. S. 545, was directed to a narrow improvement patent in a coupling device. The

Court in that case held that the patentee did no more than to devise a patentable improvement in a chuck; but the patentee did not patent that improvement as such, but attempted to patent it in combination with other old elements which did not perform any new functions in his claimed combination. This Court made this clear by pointing out the difference between the rule announced by this Court in *Lincoln Engineering Co. vs. Stewart-Warner Co., supra,* and in *Leeds and Catlin vs. Victor Talking Machine Co.,* 213 U. S. 301, 213 U. S. 325. *In the latter case this Court distinctly points out the rule that obtains with respect to the unity of an entire combination where a basic or pioneer patent is involved. All of the courts that have passed on this Gordon invention have held it to be pioneer and basic.*

The infringer's profits are not to be apportioned where the patent covers the whole of the infringing article sold; *Warren vs. Keep,* 155 U. S. 265; *Manufacturing Co. vs. Cowing,* 105 U. S. 253; or where the entire commercial value is attributable to the patented article. *Crosby Valve Co. vs. Safety Valve Co.,* 141 U. S. 441. The Gordon invention as covered by the patent in suit constituted the very heart of the machine. Without it the machine was worthless.

But aside from all of the foregoing: The rule is that in order for an infringer to have the advantages of an apportionment, where the patent covers a combination in which all of the parts cooperated as a unit, it is necessary for the infringer to separate and apportion the profits between the patented and the so-called added features. *Yesbera vs. Hardesty Mfg. Co.,* 166 F. 120; *Egry Register Co. vs. Standard Register Co.,* 23 F. (2d) 438. The rule in the *Yesbera* case has been followed. *Stromberg Motor Devices Co. vs. Zenith-Detroit Corp.,* 73 F. (2d) 62 (C. C. A. 2).

In *Christensen vs. National Brake & Electric Co.*, 10 F. (2d) 856, 866, the Court held:

> "That is to say, when once it is shown that the infringer sold a structure having the unitary characteristics of a patented structure, and that a profit was realized on such sale, the patentee ought to have the right to treat that as a sufficient prima facie showing of the measure of his recovery; and if the infringer, though conceding the prima facie profit, desires to mitigate the recovery by showing attribution of the profit or a part thereof to something else, *the latter showing should be considered as a defensive burden resting on the infringer.*"

As pointed out heretofore, the Petitioner made no attempt to apportion or segregate—it claimed that all of the profits were attributable to Melling's alleged improvements.

The Master distinctly found that it was impossible to separate the profits. The Master finds (R. 71):

> "* * * This case is of the other type, *and the impossibility of separating the profits sufficiently appears to impose the burden on defendant.* Resorting to the books of the defendant would be of no assistance on the issue; the confusion is not related to the books at all. Consequently I conclude that the plaintiff is entitled to all the profits; as between that alternative and allowing the plaintiff none, that is the fairer result."

This finding of the Master is sustained by the authorities. In *Levin Bros. vs. Davis Mfg. Co.*, 72 F. (2d) 163, the Court states (p. 164):

> "Here appellee proved profits after which appellant proved that part of the entire profit was from other features added by it and, thereafter appellee introduced positive evidence showing such confusion as to make apportionment impossible. In this situation and under the above decision the burden devolved upon appellant to establish a proper method

of apportioning these profits. * * * The evidence here sustains the finding of the master that appellant has failed to sustain this burden of proof and, so failing, appellee is entitled to the entire profit from the infringing davenports, even though they included these added features."

The cases cited by the Petitioner do not permit, much less require, an apportionment of profits in this case. In *Keystone vs. Adams,* 151 U. S. 139, the plaintiff did not prove the profits of the defendant. In the instant case Gordon proved the profits; and the courts have held that the patent in suit covered the whole machine. Nor can the Petitioner secure any comfort from *Mason vs. Graham,* 90 U. S. 261. That case does not relate at all to a question of apportionment because of the use of a mechanical equivalent. The only matter there decided is that the infringing device was made at a lower cost than the patented device, and that the defendant was entitled to the manufacturing profit measured by the difference in such costs because the infringing device was made under a patent granted to him, and that his cost was fifty cents per pair less than the picker-staff mechanism which he had immediately before put upon his looms. The same claim was very recently made in *Duplate Corp. vs. Triplex Co.,* 298 U. S. 448, and denied by this Court, Justice Cardozo stating the rule as follows (p. 457):

"4. *The allowance of the saving effected by the use of patented devices.*

"Pittsburgh was the owner of twenty-six patents which it used for its own benefit in the making of its glass. The claim is made that if the glass is not to be taken on the basis of market value, there must at least be an allowance of a reasonable royalty as compensation for the economies effected through the patented devices. But this is to misconceive utterly the position of an infringer accounting for illicit profits. 'An infringer cannot be heard to say that

his superior skill or intelligence enabled him to realize profits by his infringement which a person of less skill might not have realized.' He will be heard with no more patience in an endeavor to diminish liability by ascribing his profits to the capacity indwelling in a patent. Whatever is at his call in the service of the enterprise—brawn and intelligence, factories and lands, patents and machinery—will be viewed upon an accounting as if held upon a quasi-trust to contribute what it can to the profits of the business. The wrongdoer must yield the gains begotten of his wrong."

It was not possible to use the Melling machine without the use of Gordon's invention. The Gordon machine could have been, and was actually used without any of Melling's alleged improvements. To argue, as the Petitioner has here, that all of its profits were attributable to so-called improvements, is to say that even though it could not use Melling at all without infringing Gordon's patent, nevertheless, no part of this profit is attributable to the Gordon patent, because of a claim that Melling "improved" the operation of Gordon. The Master well held where the patent, as here, covers an entire machine, the burden is on the defendant for any claimed apportionment; and as pointed out in the *Flat Slab Patents Co.* case, *supra,* this burden is not met by attempting to show that the basic patent contributed nothing to those profits, whereas the so-called improvement is responsible for all of the profits. As pointed out by the Court in *Yesbera vs. Hardesty Mfg. Co.,* 166 F. 120, 125:

> "On the other hand, an improvement presupposes something already existing and which would remain if the improvement were to be taken off."

Strip the Melling machine of the parts that infringe on the Gordon patent and there is no operable part of the Melling machine remaining.

of apportioning these profits. * * * The evidence here sustains the finding of the master that appellant has failed to sustain this burden of proof and, so failing, appellee is entitled to the entire profit from the infringing davenports, even though they included these added features."

The cases cited by the Petitioner do not permit, much less require, an apportionment of profits in this case. In *Keystone vs. Adams,* 151 U. S. 139, the plaintiff did not prove the profits of the defendant. In the instant case Gordon proved the profits; and the courts have held that the patent in suit covered the whole machine. Nor can the Petitioner secure any comfort from *Mason vs. Graham,* 90 U. S. 261. That case does not relate at all to a question of apportionment because of the use of a mechanical equivalent. The only matter there decided is that the infringing device was made at a lower cost than the patented device, and that the defendant was entitled to the manufacturing profit measured by the difference in such costs because the infringing device was made under a patent granted to him, and that his cost was fifty cents per pair less than the picker-staff mechanism which he had immediately before put upon his looms. The same claim was very recently made in *Duplate Corp. vs. Triplex Co.,* 298 U. S. 448, and denied by this Court, Justice Cardozo stating the rule as follows (p. 457):

"4. *The allowance of the saving effected by the use of patented devices.*

"Pittsburgh was the owner of twenty-six patents which it used for its own benefit in the making of its glass. The claim is made that if the glass is not to be taken on the basis of market value, there must at least be an allowance of a reasonable royalty as compensation for the economies effected through the patented devices. But this is to misconceive utterly the position of an infringer accounting for illicit profits. 'An infringer cannot be heard to say that

> his superior skill or intelligence enabled him to realize profits by his infringement which a person of less skill might not have realized.' He will be heard with no more patience in an endeavor to diminish liability by ascribing his profits to the capacity indwelling in a patent. Whatever is at his call in the service of the enterprise—brawn and intelligence, factories and lands, patents and machinery—will be viewed upon an accounting as if held upon a quasi-trust to contribute what it can to the profits of the business. The wrongdoer must yield the gains begotten of his wrong."

It was not possible to use the Melling machine without the use of Gordon's invention. The Gordon machine could have been, and was actually used without any of Melling's alleged improvements. To argue, as the Petitioner has here, that all of its profits were attributable to so-called improvements, is to say that even though it could not use Melling at all without infringing Gordon's patent, nevertheless, no part of this profit is attributable to the Gordon patent, because of a claim that Melling "improved" the operation of Gordon. The Master well held where the patent, as here, covers an entire machine, the burden is on the defendant for any claimed apportionment; and as pointed out in the *Flat Slab Patents Co.* case, *supra,* this burden is not met by attempting to show that the basic patent contributed nothing to those profits, whereas the so-called improvement is responsible for all of the profits. As pointed out by the Court in *Yesbera vs. Hardesty Mfg. Co.,* 166 F. 120, 125:

> "On the other hand, an improvement presupposes something already existing and which would remain if the improvement were to be taken off."

Strip the Melling machine of the parts that infringe on the Gordon patent and there is no operable part of the Melling machine remaining.

Melling's so-called change in the method of tilting the tool was an infringement of Gordon. As Judge Geiger pointed out in the *Christensen* case, *supra,* that improvement was in the inhibited field of the patent, and did not constitute an improvement in the legal sense at all, because it did not constitute in itself a different structure. It was nothing but the substitution of an equivalent, as found by the Courts on the former occasions when this question was before those Courts on the issue of infringement.

In *Gordon Form Lathe Co. vs. Walcott Machine Co.,* 32 F. (2d) 55, the Court held that Melling, in order to produce the oscillating movement to maintain the normal angularity of the tool to the work, appropriated the cam and bell crank lever construction of Gordon; and that this did not occur to Melling until he had inspected Gordon's machine in operation. To argue as Petitioner does that Melling's change in the tilting of the tool, in addition to the two-cut mechanism of Melling, accounted for all this profit, is to ignore utterly the decisions of the courts to the effect that Gordon's patent was in a very true sense generic, and that Gordon was a pioneer in this branch of the art.

Petitioner claims (pages 64-65 of its brief) that there was issued to Melling a third patent No. 1,634,550; and that under the construction shown in that patent, an alternative way was opened to the Petitioner to machine its cams without utilizing the tilting tool.

Petitioner's chief tool designer Pioch, after inspecting this parallel head in 1929 as a possible method of avoiding infringement, reached the conclusion that this parallel head infringed Gordon (R. 636). The Master likewise found that this parallel head machine infringed Gordon (R. 24). The Lower Court affirmed the Master on this point, as did the Court below (133 F. (2d) 487, 495).

The question of infringement is purely a question of fact. *U. S. vs. Societe,* 224 U. S. 309, 322; *Reinharts vs. Caterpillar,* 85 F. (2d) 628, 631 (C. C. A. 9); *U. S. vs. Esnault,* 299 U. S. 201, 205; *Coupe vs. Royer,* 155 U. S. 565, 577-580; *Aluminum vs. Thompson,* 122 F. (2d) 796, 799 (C. C. A. 6).

Here then was a finding of the Master affirmed by the District Court and the Court of Appeals as to the fact of infringement; and this finding was but confirmatory of what the Petitioner's own expert tool designer found.

Under these circumstances, Petitioner's position (pages 64-65 of its brief), to the effect that the tilting or oscillating tool was not necessary or essential to the successful functioning of the infringing machines, is grounded on the substitution of a parallel head which also infringes. Petitioner is, therefore, not entitled to any apportionment of

The Petitioner is entitled to no apportionment here. Its claim is, and always was, that the Petitioner did not owe Gordon a cent. It reiterates that claim here. It did not offer proof on apportionment, although under the cases, even if there were a possibility of apportionment, that burden was on it. The decision of the courts sustaining the Master in denying Petitioner an apportionment should be sustained.

D. Other errors here and there in Petitioner's brief.

A. At page 41 it is said that respondent could "unquestionably" have recovered full compensation if it had pursued its remedies against the Walcott Company. One has only to inspect the decree of the District Court who denied the accounting because of the financial weakness of the Walcott Company (R. 1671) to find proof of this

profits on any such assumptions.

error. The Master also found that there is no evidence in this case to establish that the decree in the *Walcott* case was not based upon the financial condition of the Walcott Company (R. 82).

Moreover, recovery could not have been had for the first purchased eighteen of the machines used by the Petitioner because the respondent had no remedy against Walcott for the infringement by those machines because they were built and sold before the patent issued, nor for the other six machines because they were not included in the denied accounting.

B. At page 40 of respondent's brief it is said that Gordon had an established royalty of 10% and that the recovery should be limited to this. As in the case of most of the assertions by Petitioner, the evidence does not establish the claim that this 10% was an established royalty under the rules. While there are many rules that show that this was not an established royalty, we content ourselves with asserting that this 10% was for the *making and selling* of the machines, and even if it had been collected widely enough to establish royalty for the making and selling under the authorities, such would not be an established royalty for the *use* of the machines and therefore the Petitioner who is a user could not have resorted to this 10% as an established royalty (*Reynolds vs. Young,* 101 F. (2d) 257 (C. C. A. 6); *Horvath vs. McCord,* 100 F. (2d) 326, 336).

C. At page 6 it is claimed that the Ford Company was a pioneer in design and use of tools specializing upon a single piece, in other words that is generally known as quantity production. This scheme of manufacture was first adopted by Ely Whitney soon after the year 1800 and was first applied in the manufacture of muskets for the United States army. (*March of the Iron Men,* Burlingam 1938, pp. 187-190)

D. The claim at page 17 that the embodiment of the Gordon invention known as the Melling or Walcott machine was entirely responsible for the utility of the Gordon invention is erroneous since the proofs show that the embodiment of the Gordon invention disclosed in the patent in suit was highly useful and successful when used to turn the non-geometric forms for which it was designed, and further that the Melling or Walcott machine was merely a variant equivalent of the embodiment illustrated in the patent better adjusted to make the variant non-geometric form which was the Ford cam. To meet this error and to sustain what we have said we need no other proof than the statements of the Court on the subject and to point out that this erroneous contention by the Petitioner amounts to no more than a challenge of infringement which has been decided against the Petitioner's contention by numerous Courts below.

E. Throughout Petitioner's brief Petitioner makes the most extravagant and untruthful statements to the effect that the embodiment of the Gordon machine illustrated in the drawings of the Gordon patent was utterly worthless and an absolute failure in the turning of the Ford cams at the Ford plant. This is another inexcusable untruth. This embodiment of the Gordon invention was successful in turning many of the Ford cams and those upon which it failed it was successful in turning the entire cam except at one point. At the time that the failure of the machine to complete the commercially successful turning of all of the cams was learned it was not known that this particular embodiment of the Gordon invention could not be adjusted to turn all parts of all of the Ford cams commercially successfully. The success of the machine in turning many of the cams and in turning all except a small part of those upon which it was lame was prima facie evidence that it could be adjusted to turn them all commercially successfully.

Not until every effort to adjust this particular embodiment failed of this result did it become apparent that it would be necessary to manufacture a variant of the embodiment illustrated in the patent. Before Gordon could do this Melling had done it, and Ford had thrown out the Gordon embodiment and adopted the Melling embodiment. The opinions of the Courts are authority for these statements by us; they are also supported by the record. Therefore, instead of the Gordon embodiment being worthless and a failure on the Ford cams, as the Petitioner repeatedly incorrectly asserts, the facts are that that particular embodiment of the invention was not 100% commercially successful. It is well recognized that the first embodiment of a pioneer invention is seldom, if ever, commercially successful at all.

F. At page 66 of Petitioner's brief Petitioner asserts that the Gordon invention was a "mere improvement". Since the Gordon invention was found to be a pioneer invention by all of the courts below, we deem it needless for us to argue here a fact question thus established, and not only not raised by the petition for certiorari but not at present before this Court. Nevertheless we note that even an improvement invention is entitled to a more liberal treatment than the Petitioner asked this Court to give the Gordon pioneer invention (*Eibel vs. Paper Company,* 261 U. S. 45, 63).

G. At page 73 it is asserted that the Ford Company was guilty of no wrong. Since the Ford Company was adjudged to be an infringer by the courts below, this assertion is a challenge of a fundamental holding under the decisions of this Court to the effect that not only is an infringer a wrongdoer, but a wrongdoer of the status of a trustee *ex maleficio* wrongdoer. (*Duplate vs. Triplex,* 298 U. S. 448)

H. At the top of page 75 of Petitioner's brief it is asserted that the Ford Company "did keep records". True enough, but the record which the Ford Company kept related to other matters than to the apportionment of the savings and profits in the instant case. On this subject no records were kept, as the Master and the courts below found.

Throughout the Petitioner's brief it is contended that the embodiment of the Gordon invention incorporated in the infringing Walcott machine was greatly superior to the embodiment of the Gordon invention incorporated in the machine illustrated in the patent in suit. This is a good deal like saying that a left-handed mashie is superior to a right-handed mashie. Of course it is superior for a left-handed man, but the reverse is true of a right-handed man. The embodiment of the Gordon invention illustrated in the patent in suit was designed for one kind of non-geometric form just as the right handed mashie is designed for the right-handed man, and the embodiment of the Gordon invention incorporated in the Walcott machine was superior for another kind of non-geometric form just like the left-handed mashie is superior for the left-handed man.

It would be anathema to say that the left-handed mashie was not the same kind of mashie as the right-handed mashie merely because the one is particularly designed for the right-handed man and the other for the left-handed man, though both are in principal and in substance and mode of operation and results the same.

I. The practice—whatever it may have been—regarding the collection of royalties for the use of machine tools, either by Gordon or others,—relied upon also in the preamble to the Petitioner's discussion of the *Birdsell vs. Shaliol* rule, is immaterial to any issue in this cause. The statute awards the patentee compensation for the infring-

ing use, and this provision of the statute can not be vacated by any custom in any industry with respect to the collection of royalties, whatever that custom may be. Moreover, it is not now, and never has been, the practice not to collect royalties on pioneer inventions, no matter in what industry.

J. *The rule yielding the $900,000.* At page 32 of its brief, and elsewhere in its brief, the Petitioner repeatedly calls attention to the original claim of savings of $900,000. There is no occasion for these references inasmuch as this question was presented and decided below. However, since it has been repeatedly presented, the Court may be interested in learning the basis of the claim even though the Court thinks the question moot here. It was our position that the standard of comparison had to be accepted as it was and was not to be modified. The rule of standard of comparison is well settled as the basis of finding the gains and savings of a user who infringes a patent. It constitutes the savings made by the infringer by comparing the costs of operating the infringing machine with the costs of operating some other machine available to the defendant at the beginning of the infringement and which could produce the same product or product of equal saleability and utility. There is a host of authority to the effect that the standard of comparison cannot be modified but must be accepted as it was at the time the infringement began. (*Expanded Metal Co. vs. General Fireproofing Co.*, 247 F. 899, 910; *Egry Register Co. vs. Standard Register Co.*, 23 F. (2d) 438, 443 (C. C. A. 6); *Knox et al. vs. Great Western Quicksilver Min. Co.*, 14 F. Cas. 809; *Philadelphia Rubber*

Wks. Co. vs. U. S. Rubber Reclaiming Works et al., 277 F. 171, 177 (C. C. A. 2); *Klooster*, pp. 625-627; *Deller's Walker*, p. 2207.)

By this rule the savings amounted to $901,922.67 (R. 113). The courts below, however, permitted a modification of the standard which reduced the savings to the present judgment of $206,824.22. Inasmuch as this question has been brought up by the Petitioner's brief, we point out that there is authority for this Court going into it and reversing the lower court and raising the savings to $901,922.67. We cannot here present all the reasons for the rule, but they are well stated in the cases which we have cited. An outstanding reason is that we are here dealing with a rule of accounting and one of the difficulties of permitting changes in a standard is that no one knows where such changes will end and patent accountings already lengthy and confusing will be more than doubled in confusion and length by such a modification of the rule, since whereas now one or two standards are submitted under the rule permitting a change in the standard there will be numerous changes proposed all involving expert testimony and so on without end.

It is no answer to say that this sum is in excess of what Gordon would have received if Ford had purchased the machines from Gordon because by well established rules the profit that the patentee might have made on the machines is not the measure of the savings that the infringer made. The rule of course is that Gordon is entitled to the savings that Ford made by the use of the infringing machine over what would have been made by the use of the next best machine available to Ford which could have produced the same product. An infringer cannot defy the patentee and when brought to bar and ordered to respond settle upon the same basis that he might have settled upon before the infringement. After the war is over, the Japeneze will not be permitted to settle for the damage done at

Pearl Harbor. Nothing is better settled both within and without the patent law than that the wrong-doer cannot settle after litigation for what he might have paid before.

Resolving Doubts: It is well recognized that any doubts arising in a patent accounting are resolved against the infringer who stands before the Court in the shoes of, and to be treated as, a trustee *ex maleficio* or wrongdoer. In *Westinghouse vs. Wagner,* 225 U. S. 604, 618-619, it was held:

> "It presented a case where the court was called on to determine the liability of a *trustee ex maleficio,* who had confused his own gains with those which belonged to the plaintiff. One party or the other must suffer. The inseparable profit must be given to the patentee or infringer. The loss had to fall on the innocent or the guilty. In such an alternative the law places the loss on the wrongdoer."

(See also *Tilghman vs. Proctor,* 125 U. S. 138, 148; *Wales vs. Waterbury,* 101 F. 126, 128 (C. C. A. 2); *Thum vs. Dickinson,* 254 F. 219 (D. C. Mich.))

In the *Duplate vs. Triplex* case, 298 U. S. 448, the Supreme Court, speaking through Mr. Justice Cardozo, characterized the infringer in a patent accounting as a wrongdoer. The following from *Ellett vs. Klein,* 22 F. (2d) 807, 810, is characteristic:

> "If so (infringement of a patent) he was a trustee *ex maleficio,* and subject to the rigorous rules of accounting which applied to a wrongdoer."

In *Motor vs. Piano,* 19 F. (2d) 993, 997, the thought was expressed as follows:

> "As between the wronged and the wrongdoer, if the sword of justice in making the cleavage must shed blood, it had better be drawn from the latter than

the former. Justice forbids that the innocent should share with the guilty in the consequences of the injury."

Pioneer and Improvement Patents: The authorities relied upon by Petitioner relate to improvement patents and therefore are not in point here where a pioneer patent is involved *(Bassick vs. Hollingshead,* 298 U. S. 415, 425).

Gordon machine was successful in turning many cams and many shafts at the Ford plant: Evidence of the experience of the Gordon machine in cutting Ford cams is not new in this litigation; it was before the Patent Office and before the Courts in the other causes. In its opinion in the Walcott case, the Court of Appeals not only considered this evidence, but took note of it in the Court's comment about the difficulties that the Gordon machine had with the "long-nosed or sharp-pointed cams," meaning the Ford cams (32 F. (2d) 56). In the interference record and in the case before Judge Westenhaver there will be found evidence upon this same subject.

The record shows that Gordon built many machines just like illustrated and described in his patent and sold the same to various engine builders, such as Nash, Studebaker, Peerless, Maxwell, Cadillac and others, and that many millions of cams and other non-geometric forms were successfully turned on these machines (Main* R. 84). Much less difficulty than is ordinarily experienced with a pioneer machine, was encountered in breaking the Gordon machines in to the various tasks encountered with and by them. Such difficulties were due to materials and workmanship and not to the principles of the machine. After a machine as com-

---

* Main means the record on the infringing case reported at 87 Fed. (2d) 390.

plicated as and containing as many parts as the Gordon machine is invented and designed, considerable engineering and mechanical skill must be exercised to select the proper materials and make the parts correctly. All new machines must be whipped into shape and users of such machines so understand and are patient accordingly. Gordon found his customers exercising such patience with him until the Walcott machine was placed upon the market. Gordon was in no position to make his own machines and so the making of them was farmed out.

The Gordon machine set up and used in Petitioner's plant was, as Petitioner's witness admitted, defective in materials and workmanship and the troubles Petitioner encountered with such machine were due largely to such defects (Main R. 271). Mr. Gordon affirmed this testimony (Main R. 789).

Petitioner assigned the machine to the turning of the cams on the Fordson Tractor shafts which were not only too heavy for the machine, but which shafts were not true (Main R. 88). Nevertheless, many of these cams were successfully and satisfactorily turned on the Gordon machine notwithstanding its defective workmanship and materials (Main R. 790-791). Under the law and the authorities those admittedly turned were sufficient to establish the operativeness and utility of the Gordon machine (*Hildreth vs. Mastoras,* 257 U. S. 27, 66 L. Ed. 112; *Cleveland Automatic vs. National Acme,* 52 F. (2d) 769 (C. C. A. 6); *Crown Cork vs. Aluminum Stopper,* 108 F. 845 (C. C. A. 4)). Petitioner's attack on the operativeness and utility of the Gordon machine is based on the number of cams turned by the single Gordon machine at the Ford plant, since success elsewhere is admitted (Main R. 260). There is high dispute as to how many cams were successfully cut by this single Gordon-Ford machine, overloaded and poorly conditioned as it was. This dispute could have been settled by the pro-

duction of the Petitioner's records on that subject. None was produced though Petitioner claims to keep its records so proficiently as to overcome the presumption that mail is delivered by the United States Post Office Department (Main R. 934).

Before Gordon could rectify the defects in the Gordon-Ford machine due to poor materials and workmanship, the Melling machine was brought to Petitioner and substituted by Petitioner for Gordon. Gordon was rejected (Main R. 88 and 89). In answer to his protests about taking his invention Gordon was told that Petitioner did not care anything about his patent or his victories over Melling in the Patent Office or the Courts (Main R. 86, 87 and 211).

Melling had, after observing the operations of the Gordon machine, designed the Walcott machine embodying certain changes in degree and, what was more important from an operative standpoint, limited its activities to cutting or turning a cut only half as deep as that cut by Gordon (Main R. 91). By thus lightening the task of the machine it operated more successfully than Gordon, though on the same principle. The Gordon machines continued to be operated elsewhere doing in one cut what Walcott did in two cuts and may still be operating as far as this record shows.

The same question of operativeness and utility was presented to the other Courts in this litigation and each held in favor of Gordon. (See 4 F. (2d) 946; 14 F. (2d) 437 and 438; and 32 F. (2d) 56)

It is, therefore, manifest that Gordon is operative, useful and successful and that Petitioner rejected him not because Gordon was not, but because Petitioner could purchase the improved infringing machine. Since the Melling machine has been held by this Court to infringe, Melling is Gordon and the commercial success of Melling is the com-

mercial success of Gordon (*Dillon vs. McEachran,* 69 F. (2d) 144, 146 (C. C. A. 6)).

It is true that the manufacture of the embodiment of the Gordon machine illustrated in the Gordon patent was discontinued in 1924 due to the advent of the Melling embodiment and that at the time of the trial in 1934 Gordon did not know of the then use of an embodiment of the Gordon machine as illustrated in the patent. He had not followed each of such machines used during the ten years from 1924 to 1934. It would not be surprising if all had been worn out and junked in that ten years.

In counsel's discussion of this subject counsel are quite extravagant. Mr. Gordon said (Main R. 90):

> "I saw cams that were cut by our machine at the Ford plant on that tractor shaft. Some of them had bumps on one side and nicks on the other. That was due to several causes. In some cases it was due to the fact that the material on the shaft was not properly centered,"
>
> * * * * * *
>
> "Not all of the cams cut on our machine at the Ford plant had those nicks and bumps on them."

and (Main R. 790 and 791):

> "The Gordon machine, when it was first started up, the second time the machine was in the Ford plant, I was present there, and we turned many shafts from 15 to 20 thousandths on a side, and at one time for a run of a couple of hours we did not pay so much attention to the size, because it was a question then as to whether or not we could get production, and we succeeded in getting a production of about thirty an hour for that period, and the rest of the time we turned those cams down, I don't think at any time that we left over 30/1000ths or over 25/1000ths, unless it was due to our failure to notice that a tool point had worn down or possibly chipped off, or something like that might have happened."

and (Main R. 88):

> "When the conditions of the shafts were corrected, we turned out shafts at the rate of better than thirty an hour."

(Main R. 791):

> "These were all turned to the required size."

Mr. Gordon testified (R. 283) that the trouble was due to defective parts in the particular Gordon machine employed at the Ford plant as follows:

> "Q. Why did your company take the machine out of the Ford plant and take it back to some other place for reconditioning, or whatever work you did do on it? A. Because there was defective parts in the machine and we wished to correct them.
>
> Q. To that extent then, you yourself realized the machine was unsatisfactory, that is correct, isn't it? A. Not any more than any machine, defective parts in those machines might be a reason for a desire to take them back."

Mr. Gordon testified that most of the time he spent at the Ford plant in connection with his machine was spent trying to get the material to be used in the machine in shape so that it could be operated on in any machine. On this subject he testified as follows (R. 286):

> "Q. But you did spend some three weeks in the Ford plant in and about that machine? A. In the Ford plant, yes, sir.
>
> Q. And a great part, or a certain part of that time was work in connection with attempting to make the machine operate satisfactorily, isn't that true? A. In a sense that is true, *but most of the time was spent in trying to get the material that was to be put into the machine in shape so that any machine could operate it satisfactorily.*"

The evidence shows that the International Harvester Company made only one complaint before paying for the machine. That complaint was trivial and was promptly remedied, whereupon the Company paid for the machine and never complained again (R. 1186, 1187). It isn't in anybody's philosophy that the purchaser of a machine tool ever paid for the machine in full and then never complained about it unless the machine was fully satisfactory.

It is true that Gordon worked imperfectly when a tool broke, as any machine would, and that Gordon had no opportunity to see if the shafts turned passed the Ford inspection. His liberty in the Ford plant was limited. The shafts were in condition to pass inspection and no records of the Ford Company are produced to show they did not pass.

Even though made of defective material and workmanship, overloaded with improper raw material and trying to cut twice too deep, the Gordon machine at the Ford plant cut admittedly hundreds of shafts and thousands of cams correctly. In all other plants it worked satisfactorily. This is a record we dare say without parallel for a pioneer invention and for a machine embodying for the first time a new principle and accomplishing for the first time a new result. It is more than the law requires (*Hildreth vs. Mastoras,* 257 U. S. 27; *Remington vs. National,* 6 F. (2d) 585, 630; *Mergenthaler vs. Press,* 57 F. 502, 505). All that Petitioner says about it might be true without in any way affecting the status of the patent since a complete failure of one machine out of many would not invalidate or limit the Gordon patent.

Petitioner recognizes this and urges lack of commercial utility no matter what use may have been made of the Gordon machines by others. Thus is the contention of lack of utility reduced to a factual as well as to a legal absurdity.

The Questions of Patentability and Infringement are not included in the Three Points on which Certiorari was Granted: Although as we have pointed out, the Petitioner discusses freely and at length the questions of patentability, and infringement in its brief, those questions were not within the compass of the matter covered by the certiorari. All were presented and tried in records which the Petitioner has not brought to this Court including the record on the main case which was decided at 87 F. (2d) 390. Therefore under Rule 13, Section 9, of this Court, the Court will, as we understand the rule and the practice, not consider these questions, or will dismiss the certiorari because of the failure of the Petitioner to bring up the full record on these points. It is manifest from the extensive discussions of these questions, that Petitioner holds that considerations of these questions by this Court are important, if not necessary to a decision of the points raised by the certiorari, and at the same time has not brought up the record on the questions.

CONCLUSION.

All of the courts have held that Gordon was not only a meritorious inventor but a pioneer inventor. This Court has held that such an inventor is a public benefactor entitled to have all doubts resolved in his favor and to be awarded for the benefit which he has conferred upon the public. The Patent Planning Commission appointed by President Roosevelt has made the same finding. The Anti-Monopolies Committee appointed by the Senate has made the same finding. We therefore assert without fear of contradiction, dispute or dissent, that Mr. Gordon is entitled to this status on this accounting.

On the other hand, this and numerous other courts have held that an infringer of a patent is entitled to no better

status than that of a trustee *ex maleficio*. This holding is found in decisions by this Court both ancient and current. Petitioner has been found by all the Tribunals below who have ruled upon the question to be an infringer of the Gordon patent and therefore must be accorded that status.

We have shown that this Court granted certiorari and that this cause is before this Court as a result of a subterfuge of the Petitioner constituting the representation that a certain alleged agreement contains certain terms and postponing until its main brief the admission that there is nothing in the record to justify or support the contention that this alleged agreement contained those terms. We have pointed out that this Court has, in several cases brought before it on such subterfuges, dismissed the petition of certiorari with no more than reprimanding comments because the Court had no other power in the premises. This is not so in the instant case for the statute gives this Court the right to increase the damages as far as tripling them, and it is for just such conduct that damages have been increased in some instances even to that extent. In addition we have shown that every one of the Petitioner's major contentions, and most of the Petitioner's minor contentions, are based upon errors which should have been if they were not recognized by the Petitioner at the time they were offered. We have also shown that Petitioner has falsely charged the respondent with the suppressing of evidence in courts below where that evidence was not only present but where the presence of the evidence was commented upon by the courts who sat below in their opinions. All of which shows that the charges of suppression were not only false but were known to be false at the time the Petitioner made the charges. All of these charges are made by the trustee *ex maleficio* against the public benefactor and are in extension and in addition to charges made by the Petitioner

against the respondent and which the Master characterized as "serious" and "without any foundation."

We submit, therefore, that not only ought the courts below to be affirmed but that this Court ought to increase the damages and that that increase should be a tripling of the damages.

Respectfully submitted,

F. O. RICHEY,
JOHN W. MICHAEL,
GEO. D. SPOHN,
B. D. WATTS,
Attorneys for Respondent.

IN THE

Supreme Court of the United States

OCTOBER TERM, 1942

No. 945

No. 946

FORD MOTOR COMPANY,
Petitioner

vs.

GORDON FORM LATHE COMPANY,
Respondent

PETITION FOR REHEARING

To the Honorable the Chief Justice and the Associate Justices of the Supreme Court of the United States:

Petitioner filed its Petition for Writ of Certiorari herein and presented seven questions for the consideration of this Court. On June 7, 1943, this Court granted the Petition for Writ of Certiorari in the two cases above identified but limited the writ solely to the first question presented.

We realize fully if this Court should decide the Sixth Circuit Court of Appeals erred with respect to the point of law raised by our question No. 1 such a holding by this Court would completely dispose of the litigation and render unnecessary any consideration of the remaining questions.

We are also fully cognizant of the general rule of law that if a tribunal finds in any case, in which several questions of law may be raised, or presented, one question that is dispositive of the entire controversy, the Court need not, and ordinarily should not, deal with other questions which are rendered moot after disposal of the case on the first, or main, question.

Altvater v. Freeman, 57 U.S.P.I. 285,
Cover v. Schwartz, 133 F. 2nd 541.

Nevertheless, we respectfully request reconsideration by this Court of questions 2 and 3, of our Petition (pages 11, 13-14, 23-30) as to which we submit the decision of the Sixth Circuit Court of Appeals herein is in direct conflict with the established and authoritative rules of law enunciated by this Court. We are impelled to present this Petition for reconsideration and rehearing on these points not from the standpoint of the monetary interest of the petitioner but from the standpoint of the "public interest • • • • so frequently present, but so seldom adequately represented in patent litigation" (*Muncie Gear Works v. Outboard Marine & Mfg. Co.,* 315 U. S. 759.).

POINT 2. On the proposition that an infringer is liable for actual and not possible gains.

This point (Question No. 2) deals solely with the simple proposition as to whether or not the rule of law laid down by this Court in the case of *Tilghman v. Proctor,* 125 U. S. 136

> "that an infringer is liable for actual but not possible gains. The profits, therefore, which he must account for, are not those which he might reasonably have made, but those which he did make by the use of the plaintiff's invention" (125 U. S. 146) and that such profits are "to be ascertained by the manner in which the defendants have in fact conducted their business, and not by the manner in which they might have conducted it." (125 U. S. 151).

shall be recognized as the rule of law in the Sixth Circuit or be disregarded in that Circuit.

The holding of the Master, concurred in by the District Court and the Court of Appeals, in refusing to allow the cost of the additional straightening operation employed by defendant in its use of the infringing machines, was *not* a finding of fact of the type contemplated by Rule 52 (a) R. C. P., that should not be disturbed, but the situation is that the Master (R 41) and the Court of Appeals (R Vol. V, 20) *found the fact to be that the additional straightening operation had actually been employed by petitioner.* The Master recognized the rule of *Tilghman v. Proctor* (R 41) *but refused to follow* it, holding that if petitioner had modified the construction of the infringing machines, it might have eliminated the necessity for the use of the additional operation. Although

it might be argued the refusal to allow the cost of the straightening operation as a deduction, because the operation might have eliminated, should be considered as a fact finding, in reality it was a conclusion of law in direct conflict with the rule established by this Court in *Tilghman v. Proctor, supra* that "the expense of using the new process is doubtless to be ascertained by the manner in which the defendants have in fact conducted their business and not by the manner in which they might have conducted it." The refusal to allow a defendant a deduction for monies actually expended is, in effect also in direct conflict with the decision of this Court in the recent case of *Sheldon v. Metro-Goldyn Mayer,* 309 U. S. 390 as it would mean making an award to a plaintiff of profits that were never in fact realized and would result "not in doing equity but in inflicting an authorized penalty." (309 U. S. 405).

POINT 3. On the proposition that respondent offered no proof to show what part of petitioner's gains were due to respondent's patent, and what to patentable improvements thereon not the property of respondent, whereas, petitioner's evidence did so discriminate.

The Sixth Circuit Court of Appeals in refusing to apportion the alleged profits in the face of the total failure of respondent to offer any proof to controvert the following facts established by petitioner's proofs:

(a) that the infringing machines included patentable improvements covered by the later issued patents to Melling No. 1,512,995 (Ex. 312; R. 1171 and 1640-47) and No. 1,655,655 Ex. 209 R. 382 and 1558-66),

(b) that the inclusion of the inventions of these two patents were entirely responsible for those differences in operation between the infringing machines

(c) which rendered them useful to and usable by Petitioner (R. 782, 783, 794) and

(d) whereas the patented Gordon machine was found unusable by and devoid of any utility to Petitioner (87 Fed. 2d. 390),

decided a Federal question directly in conflict with the decisions of this Court in *Mason v. Graham,* 90 U. S. 261, *Keystone v. Adams,* 151 U. S. 139, *Westinghouse v. Wagner,* 225 U. S. 604 and *Sheldon v. Metro-Goldwyn Mayer, supra.*

The refusal of the Court below to apportion is also in direct conflict with the provisions of the applicable permissive statute R. S. 4921 that a complainant may recover only those profits realized by defendant "to which complainant is justly entitled." Furthermore it is in direct conflict, as stated by this court in the Sheldon case with the "principles governing equity jurisdiction * * * by allowing injured complainants to claim that which *ex aequo et bono* is theirs and nothing beyond this * * * (309 U. S. 399) that is all the statute authorizes and equity sanctions." (309 U. S. 406).

The decision of the Master in refusing to apportion the alleged profits was concurred in by the District Court without any comment or discussion and was based solely on the stated ground that as between the alternative of giving the respondent all of the profits or giving it none, he preferred to give it all (R. 71). The Court of Appeals in affirming the Master did not adopt the Master's reasoning or show any concurrence therewith but placed its refusal to apportion on the purely technical proposition of the matter of burden of proof. (R. Vol. V, 12).

CONCLUSION

Even though this Court should eventually decide the Sixth Circuit Court of Appeals erred with respect to Question No. 1 and reach a conclusion on such question that would result in complete disposition of this litigation and render unnecessary any consideration of the questions of alleged profits, properly allowable deductions therefrom or apportionment thereof, with the ancillary mathematical computations involved, we most respectfully submit that in view of the great public importance of the matters raised by our questions numbered 2 and 3, this Court should not permit the decision of the Court below to stand as establishing rules of law for future litigation in the Sixth Circuit Court that are in direct conflict not only with the authoritative decisions of this Court, but also violative of the provisions of the pertinent statute (R. S. 4921) and thus enable unconscionable awards of alleged profits to be obtained which are neither authorized by the statute nor sanctioned by the principles of equity jurisprudence.

Wherefore your Petitioner respectfully requests reconsideration by this Court of Questions 2 and 3 and extension of the writ herein granted to include such questions.

Respectfully submitted,

DRURY W. COOPER,
JOSEPH FARLEY,
Counsel for Petitioner.

Dated: June 18, 1943.

I hereby certify that the foregoing Petition for Rehearing is filed in good faith and not for the purpose of delay.

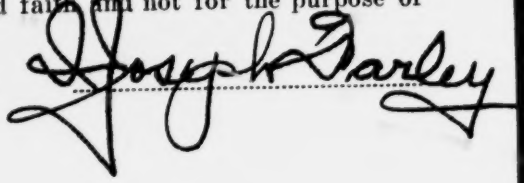

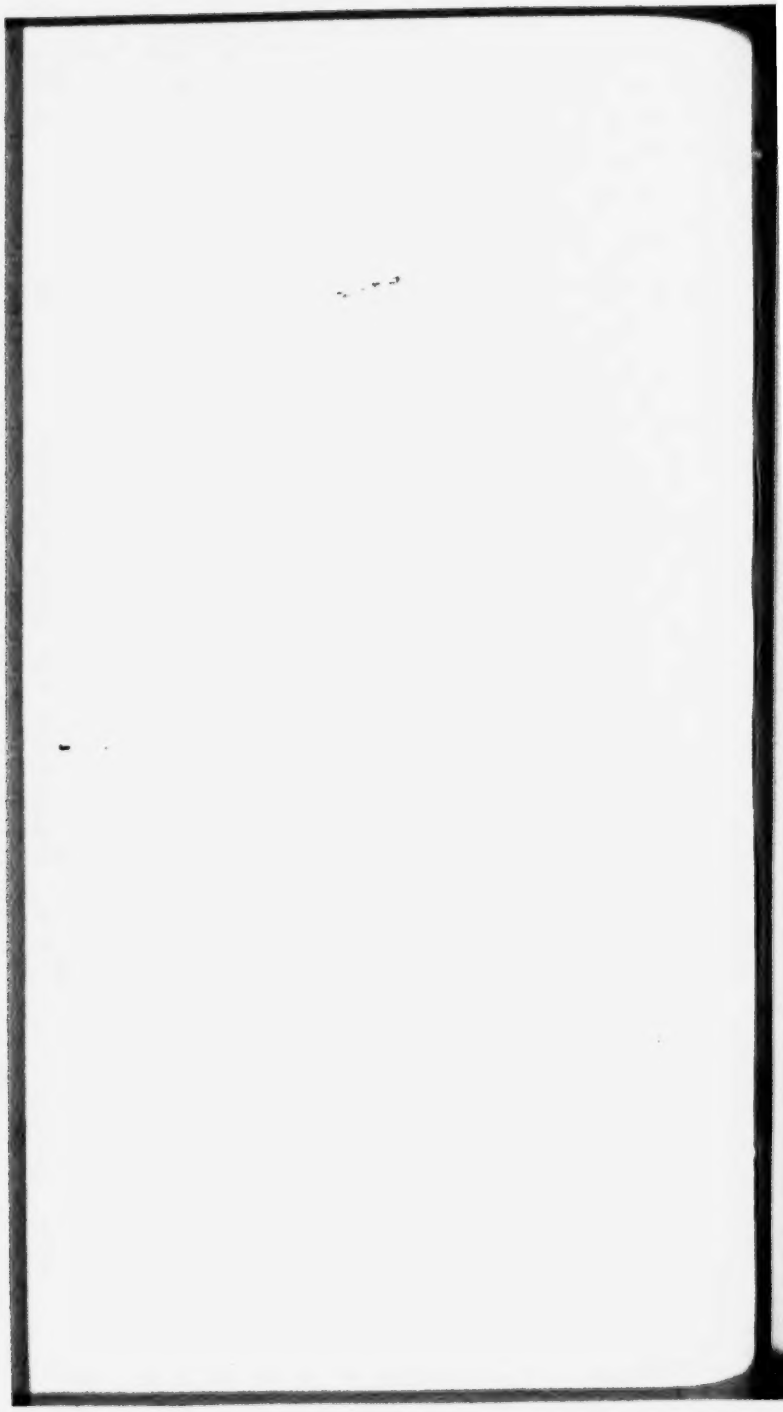

FILE COPY

FILED
DEC 31 1943
CHARLES ELMORE CROPL
CLEA

IN THE

Supreme Court of the United States

OCTOBER TERM, 1943.

No. 49

No. 50

FORD MOTOR COMPANY, *Petitioner*,

vs.

GORDON FORM LATHE COMPANY, *Respondent*.

PETITION FOR REHEARING

DRURY W. COOPER,
I. JOSEPH FARLEY,
Counsel for Petitioner.

ECLIPSE COMPOSITION COMPANY, 243 WEST LARNED ST., DETROIT

INDEX

PAGE

Point 1. On the Proposition that a Patentee after Making a Compromise Agreement With an Infringing Manufacturer May Rely Upon Birdsell v. Shaliol, 112 U. S. 485, to Mulct Innocent Customers of Much Larger Sums Than Any Recovery Obtainable from the Manufacturer 3-13

Point 2. On the Proposition That an Infringer Is Liable for Actual and Not Possible Gains 14-29

1. There Was No Change in Petitioner's Standards of Workmanship or Manufacturing Tolerances When the Straightening Operation Was Added .. 17-20

2. The Necessity for Adding the Straightening Operation Was Clearly Attributable to the Inherent Mechanical Differences Between a Lathe and a Shaper 20-23

3. The Supposititious Change in the Infringing Machine for the Hypothetical Elimination of the Straghtening Operation 23-25

4. "In Making a Comparison Between Two Types of Machinery Similar Factors on Both Sides Should Be Kept Constant and the Actual Operation of the Infringing Machine Should Not Be Weighed Against a Theoretically Ideal Operation of the Standard of Comparison" 26

5. Petitioner Clearly Carried the Burden of Proving the Necessity for the Straightening Operation and of Satisfactorily Explaining It 27-29

Point 3. On the Proposition That Respondent Offered No Proof to Show What Part of Petitioner's

PAGE

Alleged Gains Were Due to Respondent's Patent, and What to Patentable Improvements Thereon Not the Property of Respondent, Whereas, Petitioner's Evidence Did So Discriminate.....30-40

Conclusion 40

Certification 41

Table of Cases Cited

Birdsell v. Shaliol, 112 U. S. 485..... 2
Black v. Thorne, 111 U. S. 122..... 39
Cincinnati Car Co. v. New York Rapid Transit Co., 66 F. 2d, 592 8
Coupe v. Royer, 155 U. S. 565..... 38
Dean v. Mason, 61 U. S. 198..... 23
Dowagiac v. Deere & Webber Co., 284 Fed. 331..... 15
Dowagiac Mfg. Co. v. Minnesota Moline Plow Co., 235 U. S. 641..... 2
Egry v. Standard Register Co., 23 F. 2d, 438..... 2
Elizabeth v. Pavement, 97 U. S. 126..... 27
Ford Motor Co. v. Gordon Form Lathe Co., 87 F. 2d, 390 31
Gordon Form Lathe Co. v. Walcott Machine Co., 32 F. 2d, 55 3
Marconi v. U. S., 63 S. Ct. 1393..... 36
Mason v. Graham, 90 U. S. 261..... 2
McBride v. Scott, 132 Mich. 176; 93 N. W. 243..... 8
Sheldon v. Metro-Goldwyn-Mayer, 309 U. S. 390..... 2
Tilghman v. Proctor, 125 U. S. 136..... 2
Tompkins v. Erie, 304 U. S. 64..... 8
U. S. v. Esnault-Pelterie, 303 U. S. 26..... 17
Westinghouse v. Wagner, 225 U. S. 604..... 2

Statutes Cited

R. S. 4919; 35 U.S.C.A. 67..... 7
R. S. 4921; 35 U.S.C.A. 70..... 7

IN THE

Supreme Court of the United States

OCTOBER TERM, 1943.

No. 49

No. 50

FORD MOTOR COMPANY, *Petitioner*,

vs.

GORDON FORM LATHE COMPANY, *Respondent*.

PETITION FOR REHEARING

Petitioner respectfully petitions this Court for rehearing.

Petitioner filed its petition for writ of certiorari herein and originally presented seven questions for consideration to this Court. On June 7, 1943, this Court granted the petition for writ of certiorari but limited the writ solely to the first question. Petitioner filed its petition for re-hearing as to Points 2 and 3, which petition was duly granted by this Court on June 21, 1943. The case was argued on November 8th and 9th. On December 6th the following entry was made in the case:

> "*Per curiam*: The judgments are affirmed by an equally divided court. Mr. Justice Murphy took no part in the consideration or decision of these cases."

In its original Petition for Certiorari and Brief in support thereof petitioner urged upon this Court that the questions involved were of far-reaching public importance; that Point 1 presented a question never directly ruled upon by the Court; that as to Point 2 the decision of the Court below constituted a departure from the rule enunciated by this Court many years ago in *Tilghman v. Proctor,* 125 U. S. 136, and that, as to Point 3, the Sixth Circuit Court of Appeals had decided a Federal question in direct conflict with the appropriate decisions of this Court in *Dowagiac Mfg. Co. v. Minnesota Moline Plow Co.,* 235 U. S. 641; *Mason v. Graham,* 90 U. S. 261; *Westinghouse v. Wagner,* 225 U. S. 604, and *Sheldon v. Metro-Goldwyn-Mayer,* 309 U. S. 390, and also in conflict with its own decision in *Egry v. Standard Register Co.,* 23 F. 2d, 438.

As the Court was equally divided, the *per curiam* opinion which affirmed the judgment below leaves these questions of great public importance still entirely unreviewed.

The following are the three points as presented in our petition, and as to which this petition for rehearing is submitted:

Point 1. On the proposition that a patentee after making a compromise agreement with an infringing manufacturer may rely upon *Birdsell v. Shaliol,* 112 U. S. 485, to mulct innocent customers of such manufacturer of much larger sums than any recovery obtainable from the manufacturer.

Point 2. On the proposition that an infringer is liable for *actual* and not *possible* gains.

Point 3. On the proposition that respondent offered no proof to show what part of petitioner's alleged gains were due to respondent's patent, and what to patentable improvements thereon not the property of respondent, whereas, petitioner's evidence did so discriminate.

POINT 1. ON THE PROPOSITION THAT A PATENTEE AFTER MAKING A COMPROMISE AGREEMENT WITH AN INFRINGING MANUFACTURER MAY RELY UPON *BIRDSELL V. SHALIOL*, 112 U. S. 485, TO MULCT INNOCENT CUSTOMERS OF SUCH MANUFACTURER OF MUCH LARGER SUMS THAN ANY RECOVERY OBTAINABLE FROM THE MANUFACTURER.

The facts in connection with Point 1 briefly are that petitioner purchased in the open market from a manufacturer known as the Walcott Company, certain lathes particularly designed for the machining of automobile camshafts; that after these had been purchased, lathes of exactly similar construction made by the same manufacturer, the Walcott Company, were held in *Gordon Form Lathe Co. v. Walcott Machine Co.*, 32 F. 2d, 55, by the Sixth Circuit Court of Appeals to constitute an infringement of the Gordon and Redlin patent in suit. After the return of the mandate in that case by the Court of Appeals to the District Court, a judgment was entered containing the following paragraph:

"6. It being represented to the Court that the defendant is not financially able to respond to a money judgment for damages and/or profits, no account-

> ing is ordered, but, on the contrary, it is ordered that the plaintiff recover of the defendant nominal damages in the sum of one dollar ($1.00) without reference to a Master" (R. 1671).

In addition the Decree (Par. 8, R. 1672) provided for a recovery of $4,000 as costs.

Since that Decree was prepared by counsel for respondent, who consented to its entry, the Decree was to all intents and purposes a voluntary compromise designedly entered into for the specific purpose of enabling respondent to rely upon the case of *Birdsell v. Shaliol, supra,* and proceed against innocent purchasers of the infringing machines and mulct them of much larger sums than any recovery that could have been obtained from the real tort feasor, the *manufacturer* of the infringing machines.

Respondent in oral argument, and also in its brief, urged that this Court could take judicial notice of the usual practice of the courts of having counsel for the prevailing party prepare the decree; and that no other course was open to it in this respect. It urged upon this Court that whatever representations were made to the District Court concerning the financial inability of the defendant, the Walcott Company, were not made by counsel for respondent but by counsel for Walcott. We submit that the losing party to any lawsuit may not avoid the entry of a judgment against him by stating to the court that he has not money enough to satisfy such judgment and that the Decree for nominal damages, entered in the *Walcott* case, could never have been entered except upon motion of counsel for respondent, the Gordon Form Lathe Company.

We argued to the Court that we were not asking this Court to overrule the case of *Birdsell v. Shaliol* and we pointed out that the case does not apply to the situation here presented because in that case the decree for nominal damages entered in the earlier action by Birdsell against the Ashland Machine Company, the manufacturer of the infringing machines, was purely *involuntary* as far as Birdsell or the Birdsell Mfg. Company was concerned. The situation was not at all similar to that in the instant case. Birdsell, the plaintiff in the earlier case against the Ashland Machine Company, had failed to join his licensee, the Birdsell Mfg. Company, and the case having been referred to a Master for an accounting before whom the damages of Birdsell's licensee, the Birdsell Mfg. Company, were proved, he reported that no profits had been made by defendant, that if any damages were sustained, they were sustained by the Birdsell Mfg. Company, a stranger to the suit, and recommended a decree for nominal damages only. This is far different from the parties to the original action, or counsel for the parties, as here, *consenting* to the entry of a decree for nominal damages.

We do not challenge the correctness of the decision in the *Birdsell* case to the situation there presented. We do, however, urge that this Court did not intend in *Birdsell v. Shaliol* to establish an inflexible rule of law that must be followed in all cases irrespective of the situation presented in any particular case, and to the effect that if a decree for nominal damages is entered against the real wrongdoer (the manufacturer of an infringing machine who sells his machines in the open market), the patentee may then proceed against any member of the public who purchased one of the infringing machines in good faith and recover from such purchaser a sum not only greater

than any recovery that could have been obtained from the real tort feasor; a sum much greater than the value of the invention as used by the patentee and a sum even greater than the entire market value or sales price of either the patented or the infringing machine.

Although in our system of jurisprudence the decided cases stand as precedents from which authoritative rules of law are established, it is axiomatic that each case must be judged upon its own particular state of facts. Although the grant of a patent gives to a patentee the exclusive right to make, use and vend his invention and also a right of action for infringement upon the right granted by the patent, a patent infringement action, whether brought in law or in equity, is analogous to an action under general property law for wrongful appropriation or conversion. This analogy was recognized in the *Birdsell* case wherein it was stated that the

> "owner of a chattel, which others have taken from him and converted to their own use, is not deprived of his property * * * without actual satisfaction by somebody"

and that in England

> "upon technical grounds, the owner of a chattel who has recovered judgment for its value in trover against one of two joint tort-feasors, cannot, although that judgment remains unsatisfied, bring a like action against the other for the same cause."

As we read the *Birdsell* case, the Court then based its decision on the following:

> "By our law, judgment against one joint trespasser, without full satisfaction, is no bar to a suit against another for the same trespass." Lovejoy v. Murray, 3 Wall 1.

Although we do not question the correctness of the decision in the *Birdsell* case in the situation there presented, we do not think that the reference to an action of trover or the questions which were propounded to us by the Court in oral argument concerning the purloining of a horse is quite analogous to the case of patent infringement. Indeed the patent statutes specifically provide for the recovery of damages for infringement by *action on the case.* (R. S. 4919; 35 U.S.C.A. 67.) And also provides for the equitable action in which profits may be recovered. (R.S. 4921; 35 U.S.C.A. 70.)

If comparison to general property law is to be made, we submit the following to be more analogous:

Assume an ordinary tort action of trespass on the case where a trespasser goes on another's land and cuts timber which the owner had made a practice of permitting others to cut for 10 per cent of the sales price per cord. If there were a statute with respect to the conversion of timber that permitted an action to be brought in equity for the recovery of either profits or damages, certainly the amount of recovery could be no greater than the profits which the trespasser had made or the amount of damages, from lost sales, inflicted upon the owner of the property. To complete the analogy to the instant case, assume the original trespasser sold the timber which had some peculiar property which enabled him by impregnating it, let us say with two different substances, to make a quarter of a cord furnish the heat that would be furnished by a full cord of the untreated wood.

Could it be possible in the case assumed that if the owner of the land and timber found the original trespasser to be indigent he might consent to a decree for nominal damages against such trespasser and then proceed to recover the savings which each and every user made in his

fuel bill by the use of the wrongfully appropriated wood? In view of the language we have quoted above from *Birdsell v. Shaliol,* he clearly could not have done so under the law of England even if, instead of agreeing to the entry of a judgment for nominal damages, he had obtained a substantial money judgment which remained unsatisfied.

We most earnestly submit that the situation in the instant case is more analogous to *McBride v. Scott* 132 Mich. 176, 93 N. W. 243 than it is to the *Birdsell* case and under the rule of *Tompkins v. Erie,* 304 U. S. 64, the *McBride* case is controlling and therefore the consent decree entered in the *Walcott* case should have the same legal effect as the reservation of the right to sue attempted in the *McBride* case.

Although we do not believe the law of patents is *sui generis* there is perhaps one thing unique about it and that is the tendency of the Courts to refer to any defendant, found guilty of patent infringement, as a "tort feasor" a "wrong doer" the "guilty party" a "trustee *ex malificio.*" In most of the cases, however, in which these expressions are used they are applied to the real *tort feasor.* To consider that any member of the public who might be placed in the same situation as petitioner in this case is a wrong doer and a guilty party would be subversive of all sound principles of equity and justice. Indeed, it would not even be good common sense. This sort of an approach to the position of defendant in a patent infringement was well discussed by Judge Learned Hand in the case of *Cincinnati Car Co. v. New York Rapid Transit Co.,* 66 F. 2d, 592, to which, as it is most pertinent, we earnestly direct the Court's attention wherein Judge Hand stated

> "Patent infringement often involves nice and casuistical questions which it is mere artifice to treat as involving moral delinquency." (66 F. 2d, 593.)

We submit it to be a self-evident proposition that the patent infringer in all cases cannot in equity and justice, be treated as a "trustee *ex malificio* and therefore subject to the severe standard imposed upon malversators."

It is no answer to say, as pointed out by Judge Hand, that the patentee "is a victim and the infringer a *tort feasor*" because "the character of the *tort*" (particularly in a case such as the instant one) "ought not really to have such sanguinary results."

To what extent was the respondent here victimized by petitioner? It was given every possible opportunity to prove the value of its invention by the Ford Motor Company which, assisted by respondent, struggled for months to make a Gordon machine, an exact replica of the one shown in the patent, do its intended work. Petitioner was not only ready, but willing, to buy respondent's machines and it would have done so had they proved to be commercially practical machines instead of a complete failure on petitioner's work (R. 619).

The record clearly establishes that respondent never asked for or received a royalty for the *use of the patented* machines but sold them outright for a lump sum (R. 280-281) It further shows that on each and every machine sold by the respondent a royalty of 10 percent was paid to the patentee. The witness Gordon, respondent's president and *alter ego*, had denied upon direct examination that any royalty was paid on the Gordon patented ma-

chines, (R 281) but when he was confronted with the books of his Company which clearly showed the 10 percent royalty payments he admitted that his testimony should be corrected. (R. 318). The payment of this 10 percent *was not, as stated by counsel for plaintiff in oral argument to this Court, a sales commission,* for, as clearly stated by the witness Gordon *"all of the selling was done through Motch & Merryweather and I was not directly connected with them."* (R. 317) The books of the Gordon Company showed that with respect to the machine which was delivered to, and attempted to be used, by petitioner, the Ford Motor Company, a sales commission of $653.25 was paid to Motch & Merryweather and a payment of $435.50 or 10% of the sales price of $4355.00 was paid as royalty to the Production Machine Tool Company (R. 318). The books also showed that all the time respondent was selling machines it was losing money (R. 315). Had respondent pursued its accounting against the Walcott Company, as respondent could not have proved any loss of profits, as damages, and, if, as the decree (R. 1671) asserts, the Walcott Company was "not financially able", the situation presented would have been one wherein the Court would of necessity been compelled to resort to the assessment of a reasonable royalty under the statute. The maximum recovery, therefore, which respondent could have procured insofar as petitioner's twenty-four machines are concerned, would have been 10 per cent of the total selling price ($108,745.60) of the twenty-four machines sold by Walcott to Ford (R. 162) or $10,874.56. Had this been paid petitioner's machines would have become fully licensed.

We submit that when consideration is given to the above facts, the conclusion is inescapable that respondent

did not have the slightest desire to pursue its remedy against Walcott, and that respondent resorted to the artifice of having a decree for nominal damages entered in order that it could collect huge sums to which it is clearly *not justly entitled under the statute.*

Respondent has urged that we are asking "the Court to emasculate the statutes"; and that "the dark and gloomy picture" which we "attempt to paint has not appeared in these more than one hundred and fifty years." We do not ask the Court to emasculate the statute but, quite to the contrary, we insist that the plain and unequivocal language as well as the spirit and intent of the statute be followed. There is no ambiguity in the provisions of Sec. 4921 of the statute which limits the profits which a complainant in a patent infringement suit may recover to those to which he "*is justly entitled.*" What are the profits to which a complainant is justly entitled in any patent infringement suit? Certainly they can be no more than those which the defendant would have earned by the use of the invention *per se,* without the addition of valuable improvements of others.

If, when Gordon attempted to sell his machine to the Ford Company, which the Ford Company found totally unusable, he had proposed that Ford would turn over to him all of the advantages, or savings, effected by the use of the Gordon patented machine as compared with the Ford Company's successful camshaft shaper (which had been used by the Ford company for years), then there might be a logical basis in the contention that the alleged savings effected by Ford in the use of the infringing machines are profits to which respondent is justly entitled. But Gordon did not make any such proposition when he

attempted to sell his *own machine* to petitioner. He offered to sell the machine outright for the sum of $4,355.00 (R. 317). No profit would have been realized upon this sale (R. 318) except that of the sum of $435.50, the 10 per cent royalty which was included in the price of the machine and which covered the manufacture and sale as well as the full and unrestricted use thereof for the entire life of the machine, or for the full seventeen year life of the patent, whichever would have proved to be the longer.

We submit the entry of the decree for nominal damages in the *Walcott* case obviously was part of a carefully premeditated scheme, the principal purpose of which was to enable respondent to press *unjust and unrighteous* claims for hundreds of thousands of dollars of profits to which respondent, was never, and is not now, justly entitled.

The case of *Birdsell v. Shaliol* was never intended by this Court to produce the monstrous inequity that will result to petitioner and the potentially great similar danger to the general public, if the judgment below is permitted to stand. The fact that the case relied upon has never before been used or relied upon to effect the result that was achieved in the instant case is no reason for assuming it will not be so used against other innocent members of the public in the future or that it will not stand as a precedent therefor if the course of conduct pursued in this case is to stand approved. We feel that we would be remiss in our duty if we did not ask this Court to reconsider the point as we can think of no doctrine which can have more far-reaching and injurious effects to the public interest which is "so seldom adequately represented in patent litigation." Any patentee who may have pro-

cured a patent on any type of a labor saving device that is used by the general public, an automobile, a tractor, a typewriter, an adding machine, to say nothing of the hundreds of thousands of production machines that are used in American industry, may agree with an infringing manufacturer of any of such machines that "representations" be made to a Court after a finding of validity and infringement which will result in the entry of a decree for nominal damages against the manufacturer so that the patentee may proceed against innocent purchasers of the machines and recover from them all of the alleged labor savings that might have accrued to them as the result of the use of the infringing machines which contained therein the patentable invention. Indeed this case now stands as a clear invitation to the Bar to advise all clients never to collect from an infringing manufacturer of labor saving machines *but always to pursue the users thereof for their profits.* Is a premium to be placed upon legal machinations that will permit the real wrongdoer to go scot-free in order that his customers may be victimized and a patentee enriched? Surely it would be a perversion of the patent system to place the entire industry of this country in a position where no manufacturer could dare to buy and use any labor saving machine except at his peril, or to place the seller of such a machine in a position such that in order to sell his product he would have to guarantee to pay an award that would be more than double the sales price thereof, or to give a save harmless *bond.*

POINT 2. ON THE PROPOSITION THAT AN INFRINGER IS LIABLE FOR ACTUAL AND NOT POSSIBLE GAINS.

On this point, the statute is perfectly clear that a plaintiff can recover first, profits only in the event the defendant has realized them, and second, that the profits realized be those "to which the complainant is justly entitled." (R.S. 4921; 35 U.S.C.A. 70.) There is no ambiguity about the language of the statute. Neither is there any ambiguity about the rule of law laid down by this Court in *Tilghman v. Proctor, supra.* That the rule of that case is still the law, is clear in view of the full quotation at 309 U. S. page 400 in the comparatively recent case of *Sheldon v. Metro-Goldwyn-Mayer, supra,* of the same language therefrom upon which we have relied herein. *Tilghman v. Proctor* stated that the profits for which an infringer is liable are "*for actual, not for possible gains, * * * not those which he might reasonably have made but those which he did make.*"

The factual situation here is perfectly clear: the Master found as a fact that petitioner had actually used an additional straightening operation for the infringing machines (R. 41). The District Judge did not discuss the point but rendered an oral opinion (R. 118 to 130) in which he limited his discussion to the question of overhead stating that he was going to affirm the Master as to every other finding. The Court of Appeals stated:

> "The Master found that the Ford Company used an additional straightening operation on the shafts after it began using the infringing Melling-Walcott

> machine and that the labor costs thereof was the amount claimed by the Ford Company in its accounting but he found that the additional operation was not attributable to the difference between the use of the infringing machines and the shaper." (R. Vol. V, p. 20)

The reason assigned by the Court of Appeals for sustaining the Master on this point was:

> "Every reasonable presumption is in favor of the Master's report as to profits made by an infringer based on oral testimony and his report is not to be set aside unless error clearly appears. We find no such error."

We submit that the Court below on the question of the straightening operation, is clearly in error. The Eighth Circuit Court of Appeals in dealing with a similar situation stated:

> "We realize that due weight should be given to the findings of a Master, especially on a controverted question of fact or the creditability of witnesses. Certainly the Master's report is not binding where certain legal principles have not been followed or have been misapplied or when the findings of the Master do not work out substantial justice between the parties. *In such a case we see no reason why the court should not review the entire matter. Indeed it is its duty so to do (Dowagiac v. Deere & Webber Co.*, C.C.A. 8, 284 Fed. 331, 345).*

The Master's report here is clearly one (a) wherein certain legal principles have not been followed; (b) wherein the findings of the Master do not work out substantial justice between the parties, (c) it is clearly erroneous and (d) therefore presents a case where it is indeed the duty of

*(Italics where used are ours unless otherwise noted.)

the Court to review the entire matter which was not reviewed by either the District Court, or the Court of Appeals. The District Court did not discuss the straightening operation, or pass specifically on petitioner's exception (Exception 11, R. 105, 106) to the Master's report on this question as it should have done *(Westinghouse v. Wagner supra,* 225 U. S. at 622). The opinion of the Court of Appeals does not indicate that the Court gave any independent consideration to the evidence on this point, but, on the contrary, indicates that the Court merely accepted the Master's conclusions. Hence there never was any real review of, or direct ruling upon, petitioner's exception.

That portion of the Master's report which has to do with this particular question is very brief (R. 40-42) and may be readily analyzed and checked against the pertinent testimony. Analyzing the report it will be seen that the Master reached the following clearly erroneous conclusions which prompted him to reject the straightening operation as an element of cost, each of which we will show are either not supported by the record evidence, or constitute a failure to follow established legal principles:

1. He stated that "it appears that standards of workmanship in manufacturing the Model T were raised from time to time" but admitted that there was "no record of a change in tolerances for rough machining the cams." (R. 41) He then reached the "conclusion" that "while the use of the Walcott lathes may have been the occasion for adding the straightening operation, it was not the underlying cause for doing so, the operation being rather attributable to improvement in defendant's standards of workmanship." (R. 41)

2. Although he was convinced that "the operation was actually added when the infringing machines were installed," he rejected the cost thereof "on the ground that its addition was not attributable to differences between the two machines." (R. 41). The Court of Appeals apparently was largely swayed by this finding (if it be a fact finding instead of an erroneous conclusion—see *U. S. v. Esnault-Pelterie*, 303 U. S. 26 at page 31) of the Master (R. Vol. V, p. 20).

3. That "defendant could have made the Walcotts exactly like the shapers with regard to the necessity of straightening by simple changes with respect to steady rests."

4. While recognizing the rule of *Tilghman v. Proctor* he refused to follow it for the stated reason that "in making a comparison between two types of machinery similar factors on both sides should be kept constant and the actual operation of the infringing machine should not be weighed against a theoretically ideal operation of the standard of comparison." (R. 41-42) These points we shall consider in the order stated.

1. There Was No Change In Petitioner's Standards of Workmanship or Manufacturing Tolerances When the Straightening Operation Was Added.

There is no controverted question of fact on this point, nor is there any question of credibility of witnesses. The evidence is clear,—direct and unequivocal testimony supported by contemporaneous documentary proofs. The

Master apparently realized that if he allowed the cost of the straightening operation there were no profits, because respondent's accountant Moise had frankly admitted that if the straightening operation was needed with the Walcott machines and not with the shapers it should be included as a part of the cost (R. 268) and that his figures for profits should be changed to loss (R. 270-271, 275). The Master, therefore, interjected on his own volition the matter of the raising of petitioner's standards of workmanship by propounding a series of questions to the witness Pioch on this point (R. 672, 673). Fortunately the Ford Company kept records on this particular matter. We produced the witness Weyl (R. 891, 925), who brought with him the Ford Company's Engineering Information Cards (Ex. 290, R. 1596-1602). The Master inquired as to the purpose of producing such cards and attempted to point out that the cards would not conclusively answer the question as to whether or not the straightening operation had been added because of reducing the tolerances (R. 913). Counsel pointed out to the Master that he was wrong in this respect and then had the witness testify. The Master again propounded several questions to this witness in an effort to have him admit that changes in tolerances might have been made by the foremen without changing the record on the cards (R. 915, 916). The testimony of the witness was very positive that the Production Department and the foremen therein could not make any changes in tolerances unless there was authorization for a change in the drawing and also for a change in the engineering card so that a record of the change would be established as of the date of such change. Indeed, even if there had been a change in general manufacturing tolerances such a change would not ordinarily be reflected

in the rough turning of the cams for which the infringing machines were employed but would appear primarily only in the finish sizes of the work piece. The Master, apparently realizing this, endeavored to have the witness state that "nobody would particularly care whether the tolerances in the rough turning were changed or not" but the witness stated:

> "Well, you say nobody would care but still the law is they should notify us that they want that changed. We have to hold that because otherwise they would make all kinds of changes and we wouldn't know anything about them." (R. 916)

Referring to the actual record it will be seen, by reference to defendant's Ex. 290-11, (R. Vol. IV, p. 1601) that there is a record of a change on 3/11/24 at about the time when the infringing machines were being acquired and installed (See Tabulation Col. 4, R. 162). The change contained on the Engineering Information Card No. 6 (Ex. 290-11) shows that the "rough turning" dimension was changed from the upper and lower limits of 1.958" and 1.962" respectively to the upper and lower limits of 1.771" and 1.775" respectively. The contemporaneous written documentary evidence, therefore, clearly shows that there was absolutely no change in the tolerances or manufacturing standards at this time, for as stated by the witness, *"the tolerances still remained four thousands."* (R. 918).

An examination of the remaining items contained in the Engineering Information Card (Ex. 290-12) will show that up to the date of 6/14/26 there were no further changes that have anything to do with the dimensions, or tolerances, for the rough turning of the cams. If there

had been any such changes *"it would show on the cards"* as positively testified to by the witness (R. 918).

There is no testimony in the record, other than that which we have referred to above, on the matter of change of tolerances or the raising of the standards of workmanship during respondent's manufacture of the Model T car. The Master's conclusion, therefore, that the addition of the straightening operation was "rather attributable to improvement in defendant's standards of workmanship" is not only not in the slightest degree supported by the record, but is clearly erroneous and directly contradictory thereto. What stronger or more conclusive proof on this subject could be made than the documentary evidence as contained in the Engineering Information Cards (Ex. 290) which were kept by respondent for the very purpose of having a record of dimensional changes and tolerances with respect to the very operation of rough machining the cams of the camshafts?

2. The Necessity for Adding the Straightening Operation Was Clearly Attributable to the Inherent Mechanical Differences Between a Lathe and a Shaper.

Respondent has urged that the burden of proof was on petitioner to prove that the additional operation was made necessary because of differences between the infringing lathes and the standard of comparison shapers. It is not denied by respondent that the straightening operation was *not used* when the shapers were employed by petitioner, nor is it denied that the operation *was added* when the infringing machines were used. Any experienced

machinist knows that the inherent differences in the mode of operation between a lathe and a shaper would clearly compel that if a shaft, to be turned in a lathe, is in a bowed, or unstraightened condition, before it is placed in the lathe, it *must be straightened before it can be properly turned.* In the infringing lathes the shaft rotates at approximately 220 revolutions per minute (R. 553) and the tool in the lathe attacks the work tangentially. (See Figs. V-XI, sheets 3 and 4 of the Melling patent No. 1, 655,655) (R. Vol. IV, pp. 1560, 1561). If there were any appreciable bow in the shafts it would be disastrous to attempt to turn them in the infringing machines, because the eccentricity of the bowed part of the shaft would inevitably cause the tool to gouge into the work and either rip the shaft out of the machine (R. 772) or break the tool—this would be greatly accentuated because of the eccentricity of the nose portion of the cams.

In the shaper, the shaft rotates very slowly and the tools do not attack the work tangentially but *directly by pressure upon the top* in such a way that they necessarily tend to press the work piece down on the supporting steady rests. (See Ex. 53, R. 1688 and Ex. 53-B, R. 1689). The Exhibits speak for themselves in this respect and the physical facts are uncontrovertible.

These facts are also fully established by the record evidence. As we pointed out in our Main Brief on this subject, the witness, Aptekar, gave precisely the reason, we have given above, why it was not necessary to use the straightening operation on the *shapers,* because in the shaper the tool is always on top of the shaft *pressing it against the supporting base* (R. 536). He testified further

on the subject at page 543 to 558, inclusive, where he explained time and again the action of the shaper to be such as to perform an automatic straightening of the shaft.

The witness Pioch's testimony on the straightening (R. 652-658, 669-673) was clear as to the downward pressure of the tools thereon (R. 671). He stated that the straightening operation with the Walcott machine was "added to eliminate the many troubles that they had with those machines, to help the machines produce" (R. 658).

The witness Brush (a practical mechanic as well as an engineer) testified fully on the subject. He first described the tangential action of the tool with respect to the work in the infringing Walcott machines (R. 766 to 769) and illustrated his testimony with a sketch, Exhibit 272 (R. 1586). He then discussed the physical operation of the shaper tool (R. 769 to 772), and illustrated that testimony with a sketch, Exhibit 273 (R. 1587) and stated that the necessity for a straightening operation of the shafts in the infringing Walcott machines would not be modified "a bit" by the use of additional steady rests (R. 772).

Even respondent's financially interested witness Gordon, when asked his opinion concerning the necessity for the straightening operation on the Walcott machine but not on the shaper (R. 1205), corroborated completely that which we have fully discussed above, that in "the Ford shaper the pressure of the tool tended to push that (the shaft) down" (R. 1206). He next stated that "it would have been a proper operation to have the shaft straight when it went into the machine in the first place regardless of the type of machine" (R. 1207), as to which we have

no disagreement. He refused to admit categorically that there would be some difference between the machines, although he admitted the possibility thereof (R. 1207).

There is not therefore, as contended in respondent's brief, any "question of fact that was sharply disputed" (Br. p. 58) or "a sharp dispute in the testimony" (Br. p. 61). Instead, the testimony of respondent's own witnesses Gordon (R. 1206-7) and Sloniker (R. 312), clearly established the *necessity* for using the straightening operation with the Walcott lathes and does not in the slightest degree deny or even question the established fact that it was not used on the shapers.

3. The Suppositious Change in the Infringing Machine for the Hypothetical Elimination of the Straightening Operation.

Even though it may be the fact that changes might have been made in the infringing machines that would have eliminated the necessity for the use of the straightening operation, the rejection of the cost thereof and the failure to allow a deduction to petitioner for the monies actually expended by it for the performance of such operation during the infringing period, is not a fact finding but a ruling on a point of law that is directly contra the rule of *Tilghman v. Proctor* that an infringer is liable for *actual and not possible gains.* In other words, it is the same sort of a thing as presented to this Court in the old case of *Dean v. Mason,* 20 How. 198, 61 U. S. 198, wherein this Court ordered the reversal of a decree based on a Master's report of estimated profits "which the defendant

with reasonable diligence, might have realized." (61 U. S. 203). But, even as a fact finding, the Master's statement that "the defendant could have made the Walcotts exactly like the shapers with regard to the necessity of straightening by simple changes with respect to steady rests" (R. 41) is clearly erroneous. This statement, adopted by the Court of Appeals as follows:

> "That the infringing machines could have been made to operate precisely as the shapers with the installation of steady rests which would have eliminated the additional straightening operation." (R. Vol. V, p. 20)

was clearly based by the Master upon the following which immediately preceded it:

> "Brush and Pioch, defendant's principal experts, both testified that the necessity of straightening could have been eliminated by modification of the steady rest or the addition of other steady rests." (R. 41)

The witness Brush on this subject, stated categorically (R. 770-2) that the action of the tool on the work piece in the lathe would not be in any way influenced, or modified, by the number of steady rests that were used, although he stated that if a three point steady rest were employed instead of a two point steady rest, with the rollers properly spaced, the necessity for straightening a work piece to eliminate a general bow therein would not apply; (R. 808-9) the witness Pioch's testimony on this point was that if three steady rests had been used in the Walcott machines it "very likely" would have avoided the necessity for the straightening. (R. 672).

On cross-examination Brush and Pioch went no further than admitting the *possibility* of the elimination of the straightening operation and their testimony was not, as stated by the Master and the Court of Appeals, that the straightening operation "could," or "would," have been eliminated, nor was the testimony to the effect that the Walcott lathes "could have been made to operate precisely as the shapers," as stated by the Court, or "exactly like the shapers," as stated by the Master.

The above testimony is a far cry from supporting the finding that the infringing Walcott lathes could be made to operate "precisely" or "exactly" like a shaper. Even though changes in the infringing machines *might have eliminated* the necessity for using the straightening operation, the fact remains that the suggested problematical changes never were resorted to by petitioner. Nor was any burden placed on it under the law to make these changes, particularly when the suggestions therefor were not made until many years after all operation of the infringing machines had ceased. To hold otherwise is to hold that this Court did not mean what it said in *Tilghman v. Proctor,* but that the language thereof must be given precisely the opposite of its clear and unequivocal meaning and import, and as if it read "*the profits which an infringer must account for are not those which he did make but those which he might reasonably have made and that the expense of using the new process is doubtless to be ascertained by the manner in which the defendants might have conducted their business and not by the manner in which they have in fact conducted it.*"

4. "In Making a Comparison Between Two Types of Machinery Similar Factors On Both Sides Should Be Kept Constant and the Actual Operation of the Infringing Machine Should Not Be Weighed Against a Theoretically Ideal Operation of the Standard of Comparison."

Both the Master (R. 41, 42) and the Court of Appeals (R. Vol. V p. 20) recognized the rule of *Tilghman v. Proctor* but both refused to follow the rule, the Master stating first that "in making a comparison between two types of machinery similar factors should be kept constant" and secondly "the actual operation of the infringing machines should not be weighed against a theoretically ideal operation of the standard of comparison." The Court of Appeals based its ruling solely upon the *presumption* in favor of the Master's report. To say that similar factors, on both sides should be kept constant is to deny the rule of *Tilghman v. Proctor* for if an additional straightening operation which undeniably *was used* in the use of the infringing machines as the Master and the Court of Appeals found, and *was not used* when the standard of comparison machines were employed, *there are no similar factors to be kept constant.* The refusal to make allowances for the cost of the additional operation therefore constitutes a complete disregard of the unequivocal statement of this Court in *Tilghman v. Proctor* that the infringer is liable for *actual* and not for *possible* gains.

5. Petitioner Clearly Carried the Burden of Proving the Necessity for the Straightening Operation and of Satisfactorily Explaining It.

In *Elizabeth v. Pavement,* 97 U. S. 126, this court affirmed the report of a Master in refusing to allow a certain deduction

> "claimed to have been profits made upon other work which were allowed to be included in these contracts. As this is not explained in any satisfactory way, we think the Master did right in rejecting it" (97 U. S. 126 at 142).

Respondent in its brief relied upon the last sentence contained in the above quotation. We submit there is a vast difference between a claimed deduction which *"is not explained in any satisfactory way"* and one with respect to which the proofs are as clear, convincing and uncontradicted, as are petitioner's proofs concerning the deduction it claimed for the cost of the straightening operation. There is no disputing the evidence that the operation was actually used. Respondent did not attempt to deny this fact and both the Master and the Court of Appeals found the fact to be that it was used. The fact that it *was not used* on the shapers and *was used* on the infringing machines was clearly established by *contemporaneous documentary evidence,* the operation sheets or time studies, Exhibits M (R. 1432-33) and Exhibit N (R. 1434-35). The authenticity of these records was fully established by the witnesses Libby (R. 436-460) and Marentette (R. 486-495), both of whom showed their familiarity with the operation of the machines and testified that the

data contained on the time studies jibed with their own recollections. The witnesses Shawkey and Myers testified that *the straightening operation was required immediately before the shafts were inserted in the Walcott lathes* (R. 429-486). The following witnesses also testified that *the straightening operation was not required before the shafts were placed in the shaper*: Libby (R. 441) and Oberhoffken (R. 1111). In addition, the following witnesses testified that the straightening operation *was required with the Walcott but not with the shapers* Wibel (R. 500-501); Aptekar (R. 534-539, 543, 545-547); Pioch (R. 652-656) and Brush (R. 762-772). The witnesses Aptekar, Pioch and Brush explained fully and clearly *why* the operation was needed when the Walcott lathes were used and *why* the operation was not needed when the shapers were used. A consideration of the mechanical facts as hereinbefore discussed (*supra* pp. 20-23) exemplifies fully the correctness and accuracy of the full explanations given by the last-named witnesses. In addition, the witness Hunt also testified (R. 564) concerning the automatic straightening operation of the tools in the shaper. Hunt's testimony agreed completely with the explanations given by Aptekar, Pioch and Brush as to why the straightening operation was not required when the shapers were used.

We have therefore ten witnesses produced by petitioner on this question. Their testimony was not contradicted or controverted in the slightest degree. Respondent offered no evidence nor has it ever attempted to deny the fact that the operation *was not used on the shapers but was used on the Walcott.*

All we have from respondent on the subject is the testimony of the witnesses Sloniker and Gordon—both stated

that it was the *usual practice* to employ a straightening operation before a shaft is placed in any machine. This testimony is therefore corroborative of the necessity for the use of the operation when the Walcott lathes were employed. Gordon admitted the possibility of the shaft being pushed down onto the steady rests in the shapers. Petitioner fully met not only the burden of proving the fact by an overwhelming preponderance of evidence, but proved it beyond a reasonable doubt.

We submit, therefore, that as respondent's own accountant admitted all of his figures of account showing an alleged profit would be converted into a loss, if due allowance were made for the straightening operation (R. 268, 270-1, 275), and that as the Master and the Court of Appeals also found that petitioner's figures showed a loss and not a profit, if due allowance is made for the cost of the straightening operation, the situation presented in this case is that there is *no proof of damages,—or no proof of profits,* consequently, the only award that can properly be made is one of *nominal damages only.* Anything more *would not do substantial justice,* would result in a payment of money to respondent to which it is not *justly entitled under the statute* and would result in inflicting an *unauthorized penalty upon petitioner.* (*Sheldon v. Metro-Goldwyn-Mayer, supra.*)

POINT 3. ON THE PROPOSITION THAT RESPONDENT OFFERED NO PROOF TO SHOW WHAT PART OF PETITIONER'S ALLEGED GAINS WERE DUE TO RESPONDENT'S PATENT, AND WHAT TO PATENTABLE IMPROVEMENTS THEREON NOT THE PROPERTY OF RESPONDENT, WHEREAS, PETITIONER'S EVIDENCE DID SO DISCRIMINATE.

On the question of apportionment we are utterly unable to comprehend why petitioner should be placed in any different position than the defendant in any one of the cases of *Mason v. Graham, supra*; *Westinghouse v. Wagner, supra; Dowagiac Mfg. Co. v. Minnesota Moline Plow Co., supra; Sheldon v. Metro-Goldwyn-Mayer, supra,* or *Egry v. Standard, supra.* In *Mason v. Graham,* although this Court held that the defendant's infringing devices must be considered *"as practically the same as that patented to the complainant"* (90 U. S. 275), it was shown in that case that certain savings in the manufacture of the infringing devices were effected by the use of an improvement "of the defendant's own devising," and this Court properly held

> "Manifestly the complainants are not entitled to the savings or profits resulting from the defendant's own invention" (90 U. S. 277).

In *Westinghouse v. Wagner,* claim 4 of the patent covered the entire construction that was made by the defendant. Defendant, however, used intervening spaces in the coil that formed part of the entire subject matter covered

by the claim. The Master had held that as the entire commercial value of the transformers was due to the invention covered by claim 4, all of the profits belonged to the Westinghouse Company (225 U. S. 622). The Court below held that the defendant's additions were not infringements and had contributed to profits and as plaintiff had failed to make a separation it was entitled only to nominal damages. This Court in the Westinghouse case set forth four rules with respect to the burden of proof on the question of profits in a patent infringement account (225 U. S. 614-5). Without repeating these rules it suffices to say that the instant case falls squarely under Rule (d).

In the case at Bar respondent has urged that the patent in suit covered the lathe as an entirety and relied heavily upon Claim 2 thereof. In this respect the situation is precisely similar to that in the case of *Dowagiac Mfg. Co. v. Minn. Moline Plow Co., supra,* wherein the claim of the patent covered the general combination. This Court, however, in that case referred to the language of the patent to the effect that the invention related to "new and useful improvements in grain drills." Precisely the same language is used in the Gordon patent in suit, wherein the preamble to the specification states that Charles Gordon and Alfred W. Redlin "have invented certain new and useful improvements in lathes."

Respondent quoted in its brief (p. 12) the following statement of the Court of Appeals from the decision on appeal from the main case of infringement, *Ford Motor Company v. Gordon Lathe Company,* 87 F. 2d, 390, 391: 390, 391:

> "Full consideration thereof brings conviction of its insufficiency to warrant modification of our previous conclusion that the patentees were *pioneers* * * * "

but respondent did not quote the language which immediately followed and which explains the *one and only detail of "pioneership,"*—to-wit:

> "in disclosing means for oscillating the tool in synchronism with its reciprocating movements by the use of an appropriate shaped cam, movable frame and bell crank lever tool support."

Gordon's invention, therefore, had to do solely with but a single feature, the use of a *tilting tool* in a lathe and the *means for tilting it. Gordon was not the first inventor of a lathe.* It is perfectly evident from an examination of the Gordon patent, that the bed, or frame, was not new, the head stock and tail stock were not new, the means for driving the head stock was not new, the means for feeding the tool carriage was not new, nor were the gears for effecting the drive of the head stock and feed of the carriage new. Gordon's pioneership, as stated by the Court of Appeals, was clearly limited solely to the tool tilting means. So the situation here is on all fours with the *Dowagiac* case, where this Court held the improvement to reside solely in the "seeding part of a grain drill—the part which opens the furrows, guides the seed into them and then closes them" (235 U. S., 645 et seq.).

In the *Dowagiac* case the Court stated that the plaintiff did not conform to the rule of *Westinghouse v. Wagner,* as

> "It neither submitted evidence calculated to effect an apportionment nor attempted to show that one was impossible; and this, although the evidence upon the accounting went far towards showing that

there was no real obstacle to a fair apportionment. Certainly no obstacle was interposed by the defendants. (235 U. S. 646, 647). * * * * *

As was said in Tilghman v. Proctor (125 U. S. 136, 145), 'it is inconsistent with the ordinary principles and practice of courts of chancery, either, on the one hand, to permit the wrongdoer to profit by his own wrong, or, on the other hand, to make no allowance for the cost and expense of conducting his business, or to undertake to punish him by obliging him to pay more than a fair compensation to the person wronged' " (235 U. S. 647).

Nothing could be more apposite to the situation in the instant case than this language of the Court.

In the *Egry* case the Sixth Circuit Court of Appeals in refusing to allow any profits correctly held that—

"An apportionment being necessary, *the burden is upon the plaintiff to make it, or show a sufficient excuse for not doing so* * * * but there was no effort by plaintiff to utilize expert testimony for this purpose * * * "

"We do not understand the Westinghouse case as holding that, in every case where the profits cannot be apportioned, defendant must pay them all. * * * "

"Defendant may well be penalized with the entire profits, when his failure to keep apportionment records which might have been kept is at the base of the confusion; not so, we think, *when no possible keeping of records by defendant would have minimized the uncertainty.* * * *" (23 F. 2d, 442.) 442.)

Here again the language is particularly appropriate to the case at Bar.

In the case of *Sheldon v. Metro-Goldwyn-Mayer, supra,* this Court held that to make an award of profits which have been shown not to be due to the infringement

> "would be not to do equity but to inflict an unauthorized penalty" (309 U. S. 390).

But there it was argued that without the plot there would have been no play. Here it is argued without Gordon's tilting tool there would have been no Walcott machine. (As to this see pp. 64-65 of our "Brief for Petitioner.")

In the instant case, the only reason given by the Master for failing to apportion the profits was,—that between the alternative of giving the plaintiff all of the profits or giving it none, he preferred the former as the "fairer result" (R. 71), while the Court of Appeals based its opinion that respondent was entitled to all of the profits on the stated ground that

> "the Gordon Company, having shown commingling of profits by the Ford Company, and it appearing that the latter company failed to keep records or supply evidence that would disclose what proportion of the profits arose from the infringing device and what proportion, if any, from Melling improvements, the burden again returned to the Ford Company, which it has failed to carry, and such failure creates an unavoidable liability" (citing Horvath v. McCord, 100 F. 2d, 326).

We deny the correctness of the statement that there was any commingling of profits by the Ford Company and we refer to the holding of the Master that "*the confusion is not related to the books at all*" (R. 71), and his

further more detailed discussion of petitioner's accounting and record keeping system (R. 91-92). We insist that the situation here is one akin to that in the *Egry* case —one wherein "*no possible keeping of records by defendant would have minimized the uncertainty.*" The statement by the Court below that "the Gordon Company having shown commingling of profits" is therefore not in accordance with the facts or the record. Likewise it is not in accordance with the record to state that "the Ford Company failed to supply evidence that would disclose what proportion of the profits arose from the infringing device and what proportion, if any, from Melling improvements."

The Master, after discussing the two additional patentable Melling improvements included in the infringing machines, made the unequivocal fact finding—

> "It seems clear without these two improvements no savings would have been realized by the defendant, at least by comparison with the shaper" (R. 62).

Although the Master correctly stated the facts to be

> "That plaintiff submitted no evidence to separate the respective contribution of the two patents, relying upon its legal contention that the doctrine of apportionment is not applicable here."

He then incorrectly stated—

> "Defendant's evidence on the issue consisted almost wholly of expert testimony that, since the Gordon machine was not operable on the Ford camshaft, one hundred percent of the value of the infringing machine to defendant was attributable to the Melling improvements."

The Master was clearly mistaken in this respect, for defendant's expert did not so testify. His testimony on this subject was as follows:

> "Q. (By Mr. Farley): Insofar as the operation of the Gordon machine and the Walcott machine at the Ford plant are concerned, Mr. Brush, what proportionate *increase of efficiency* do you think would be attributable to the Walcott machine *because of these differences that you have just discussed such as outlined in the claims of the Melling patent?* A. *Just* 100 *percent.*
>
> The Master: Well, what do you mean?
>
> A. I mean, the difference.
>
> The Master: You don't mean you can make any mathematical computation?
>
> A. No. What I mean is—I spoke in the vernacular—these differences in the movements are the things that make *all the difference in the behaviour of the two machines on the same work piece. And, if I understood Mr. Farley's question, he was referring particularly to these differences as defined in the claims of the Melling patent.*" (R. 794)

Surely this was direct evidence on the very point. And respondent offered nothing to controvert it. There is, however, additional evidence in the record, first, as to the two cut mechanism as to which Gordon admitted that Melling was "smarter" than he was (R. 387-8). The Master rested his finding on this point that as Claim 2 of the patent includes the element of "means for simultaneously causing relative movement between the work holder and tool holder axially with relation to the tool holder", the claim covered this feature (R. 62). As to this, however, we direct attention to *Marconi v. U. S.*, 63 S. Ct. 1393, wherein this Court held that findings that certain "apparatus coming within the terminology of Claim 16 * * *

and infringe Claim 16, give no aid in solving this problem" (apportionment).

We submit that petitioner in offering the testimony above quoted of the witness Brush fully met the burden of going forward with the proof as required by Rule (d) of *Westinghouse v. Wagner, supra.* If Brush's testimony was either untruthful or incorrect, the burden was squarely placed upon respondent to disprove it. At any rate, it stands uncontradicted in the record.

There was further evidence, however, on this point to which we direct the Court's attention, and we refer the Court to paragraphs numbered 34, 35, 36 and 37 (R. 134) of the first Master's Order for Statement of Account (R. 132, 137) and defendants' answer thereto (R. 144-146), which relate to petitioner's use of the patented Gordon machine during the many months it was in the Ford plant. In defendants' answer 37 (R. 146) and Exhibit 11 referred to therein (R. 158-159) it was shown that the output of the patented Gordon machine when defendant attempted to use it for machining its Fordson tractor camshafts was but five shafts per hour. The Master found the infringing Walcott machines to have an output of twenty Fordson tractor camshafts per hour. Respondent's counsel, Mr. Spohn, in the hearings before the Master, admitted the truth of the answers (including answer 37) relating to petitioner's use of Gordon machine, but objected to them as being totally irrelevant (R. 350-351). We submit, therefore, that petitioner did meet its burden of going forward with the evidence, and that therefore the burden was then shifted to respondent. Respondent, however, made absolutely no effort to go forward with any further evidence on this point. Instead, it claimed,

and still claims, to be entitled to an award of all of the alleged profits which clearly resulted from the additional patentable improvements of Melling. In view of the foregoing we submit the holding of the Sixth Circuit Court of Appeals that petitioner

> "failed * * * to supply evidence that would disclose what proportion of the profits arose from the infringing device and what proportion, if any, from Melling's improvements"

is clearly in error.

We further submit that the situation in the instant case is on all fours with that in *Coupe v. Royer*, 155 U. S. 565, wherein this Court, after discussing the rule of *Tilghman v. Proctor*, stated:

> "If there was no such advantage in his use of the plaintiff's invention, there can be no decree for profits" (155 U. S. 583).

and held that the District Court

> "applied the wrong standard in instructing the jury that they should find what defendants *might* be shown to have gained from the use of the patented invention."

The Court then stated the failure to follow *Tilghman v. Proctor* resulted in estimating "what the defendant's profits *might* have been and not what they actually were" (155 U. S. 583), and this Court then held:

> "Upon this state of facts, the evidence disclosing the existence of no license fee, no impairment of the plaintiff's market, in short, no damages of any kind, we think the Court should have instructed the jury, if they found for the plaintiffs at all, to find nominal damages only."

Precisely the same situation is presented here. There were no profits at all if the rule of *Tilghman v. Proctor, supra, Coupe v. Royer, supra,* and *Dean v. Mason, supra,* is followed. No impairment of respondent's market resulted from any act of petitioner, as respondent was given every possible opportunity to prove the value of his machine to petitioner. We submit, therefore, that the present case is one where, under the rule of *Coupe v. Royer,* an award of nominal damages only should be made.

This Court has *never* before held in any case that a plaintiff could recover profits resulting from contributions made by others.

In *Black v. Thorne,* 111 U. S. 122, it stated:

> "It does not always follow, that because a party may have made an improvement in a machine and obtained a patent for it, another using the improvement and infringing upon the patentee's rights will be mulcted in more than nominal damages for the infringement" (111 U. S. 124).

Again in the *Dowagiac* case this Court said that in a patent infringement case

> "* * * the normal measure of damages was the value of what was taken. * * *" (235 U. S. 648).

What was the value of what was taken in the case at bar? We submit it can be no more than that value which Gordon himself placed upon his invention, namely, 10 per cent of the sales price of his own patented machine, which covered the manufacture and sale as well as the unrestricted use thereof. This, we submit, is the maximum. But even as to this its value to petitioner without the Melling improvements was less than nothing, as the cost of the

use of the Gordon machine to petitioner without Melling's improvements was prohibitive—$2.40 per camshaft!—(See Exhibit 11, R. 159.) The amount of $206,824.22 does not in the slightest degree represent profits to which complainant *is justly entitled* nor the *"value"* of Gordon's invention to petitioner, but results, not in doing justice, as stated by this Court, in the *Sheldon* case, but in inflicting an unauthorized penalty on this petitioner.

CONCLUSION

We therefore submit that as the opinion below decided great questions of public importance in direct conflict with the authoritative rules of law established by this Court and, if the judgment below is permitted to stand, it will result in grave injustice to petitioner, this petition for rehearing should be granted, the opinion below reviewed, the judgment reversed, and the case remanded for such further action as to this Court may seem proper.

Drury W. Cooper,
I. Joseph Farley,

Counsel for Petitioner.

CERTIFICATION

Counsel for petitioner hereby certify that the foregoing petition for rehearing is presented in good faith and not for the purpose of delay.

Drury W. Cooper,
I. Joseph Farley,
Counsel for Petitioner.

IN THE

Supreme Court of the United States

OCTOBER TERM, 1943.

No. 49

No. 50

FORD MOTOR COMPANY, *Petitioner*,

vs.

GORDON FORM LATHE COMPANY, *Respondent*.

PETITION TO STAY MANDATE

To the Honorable the Chief Justice and Associate Justices of the Supreme Court of the United States:

Your petitioner, Ford Motor Company, respectfully states that in view of the order in this cause entered December 6, 1943, of a *per curiam* affirmance of the judgments below by an equally divided court, it is filing a petition for rehearing in accordance with the provisions of Rule 33 of this court; and petitioner therefore respectfully prays that the issuance of the mandate herein be stayed until this Honorable Court has passed on the petition for rehearing, and if the petition for rehearing is granted, the issuance of said mandate be further stayed until after the rehearing and final determination thereof by this court.

DRURY W. COOPER,
I. JOSEPH FARLEY,
Counsel for Petitioner.

FILE COPY.

Office - Supreme Court, U.
FILED
JAN 7 1944
CHARLES ELMORE CROPL
CLE

In the Supreme Court of the United States

OCTOBER TERM, 1943.

Nos. 49 and 50.

FORD MOTOR COMPANY,
Petitioner,

vs.

GORDON FORM LATHE COMPANY,
Respondent.

RESPONDENT'S ANSWER TO THE PETITION FOR REHEARING.

F. O. Richey,
John W. Michael,
Geo. D. Spohn,
B. D. Watts,
Attorneys for Respondent.

The Gates Legal Publishing Co., Cleveland, Ohio—Main 5647

In the Supreme Court of the United States

OCTOBER TERM, 1943.

Nos. 49 and 50.

FORD MOTOR COMPANY,
Petitioner,

vs.

GORDON FORM LATHE COMPANY,
Respondent.

RESPONDENT'S ANSWER TO THE PETITION FOR REHEARING.

The Petition for Rehearing presents no question and no contention which was not fully presented, argued, considered and decided against Petitioner in this Court and in each of the tribunals below, as can be readily seen from a comparison of the indexes and outlines in the Petition for Rehearing and in the briefs filed in this Court on the main case. Petitioner makes no claim that the Petition for Rehearing presents any question or contention not heretofore presented, argued and considered. We deem it unnecessary to repeat here our answers to the Petitioner's re-statement of its former arguments. Our answers are readily to be found in our Main Brief in this Court.

The fact that this case was affirmed by this Court by a divided Court affords no reason for a rehearing. Such a contention has been answered by this Court in many opinions of this Court, including that in the case of *Brown v. Aspden's Adm'rs,* 14 Howard 311, a consideration

of which is perhaps sufficient to expound the practice of this Court in the premises.*

Respectfully submitted,

F. O. Richey,
John W. Michael,
Geo. D. Spohn,
B. D. Watts,
Attorneys for Respondent.

---

* In the cited case this Court said (14 Howard 312):

"Nor is the circumstance, that a decree is affirmed by a divided court, any reason for ordering a re-argument before a full bench in any case. In a body as numerous as this, it must often happen, from various causes, that the bench is not full. And experience has shown, that it has rarely happened that every judge has been present every day throughout any one entire term. The case before us is certainly an important one, in its principles and in the amount in dispute. But there are many cases on the docket at every term of the court much more important in both respects. And if it is to be understood that cases of this description are not to be finally decided without the concurrence of a majority of the whole bench, it would be a useless consumption of time to hear them in the absence of any one judge, because it would be uncertain whether a judgment could follow after the argument. And it is easy to foresee the inconvenience, delay and expenses to which a practice of that kind would subject the parties, and the uncertainty and confusion it would produce (to the great injury of other suitors) in the order of business as it stands on the docket of the court.

"Neither is there any difference between a decree in chancery and a judgment at law, as to its affirmance on a division of the court. In both cases, the motion is to reverse; and if that fails, the judgment or decree necessarily stands, and must therefore be affirmed. And in most of the cases affirmed in this manner, a majority, in fact, of the judges, who act judicially upon the case, concur in the judgment. For the Circuit Court is composed of two members, and if both are on the bench, they must concur in the judgment or decree; otherwise it could not be passed, and the point would be certified by a divided court."

INDEX.

Statement 1

Summary of the Matter Involved 4

Jurisdiction 9

Petitioner's Questions Presented 9

Argument 12

Point (1): Respondent made no "compromise agreement" or "deal" with Walcott Machine Company, the infringing manufacturer 12

Point (2): The Master resolved the issue of fact on the "straightening operation" against petitioner; and the District Court and the Circuit Court of Appeals approved and accepted the Master's finding 16

Point (3): The Master resolved the fact issue of apportionment against petitioner; and the District Court and the Court of Appeals approved and accepted this finding 18

Point (4): Melling's patent 1,634,550 infringed Gordon 21

Point (5): Petitioner unlawfully used Gordon's invention 22

Point (6): The respondent effected and retained considerable overhead savings by reason of the use of the infringing machines 24

Point (7): The Master found damages of the respondent, by way of reasonable royalty, in the sum of $120,000, which finding was concurred in by the District Court and the Court of Appeals 29

Conclusion 31

TABLE OF AUTHORITIES.

Cases.

Adamson v. Gilliland, 242 U. S. 350 4

A. T. & T. v. Radio, 5 Fed. (2) 535 11

Bigelow v. Old Dominion Copper Co., 225 U. S. 111 (1912) 9, 15

Birdsell v. Shaliol, 112 U. S. 485 (1884) 10, 15

Christensen v. National Brake and Electric Co., 10 F. (2d) 856 19

Corsicana Nat. Bank v. Johnson, 251 U. S. 68 10

Dowagiac v. Deere & Webber, 284 Fed. 331 (C. C. A. 8) 12

Dowagiac Mfg. Co. v. Minnesota Moline Plow Company, 235 U. S. 641 20-21

Duplate Corp. v. Triplex Safety Glass Co., 298 U. S. 448 .....8, 28

Elizabeth v. Pavement Co., 97 U. S. 126 17

Exhibit Supply Co. v. Ace Patents Corp., 315 U. S. 126 9

Flat Slab Patents Co. v. Turner, 285 Fed. 257 19

General Pictures v. Electric, 304 U. S. 175 3

Gordon Form Lathe Co. v. Walcott Machine Co., 32 F. 2d 55 (1929) 5, 6, 12, 13, 14, 22

Hildreth v. Mastoras, 257 U. S. 27 10

Keller v. Adams, 264 U. S. 311 2

Layne and Bowler Corporation v. Western Well Works, 261 U. S. 387 ..... 2, 3

Lincoln Engineering v. Stewart Warner Corp., 303 U. S. 546 9

Lovejoy v. Murray, 3 Wall. 1 .....10, 15

Machine Co. v. Murphy, 97 U. S. 120 22

Mason v. Graham, 90 U. S. 261 .....20, 21

Melling v. Gordon Form Lathe Co., 14 F. 2d 437 5

Mishawaka Rubber & Woolen Mfg. Co. v. Kresge Co., 316 U. S. 203 9

Morton Salt Co. v. G. S. Suppiger, 314 U. S. 488 9

Muncie Gear Workers v. Outboard Marine & Mfg. Co., 315 U. S. 759 9

Sessions v. Johnson, 95 U. S. 347 10

Sheldon v. Metro-Goldwyn Corp., 309 U. S. 390 21

The Suffolk Mfg. Co. v. Hayden, 3 Wall. 315 12

Tilghman v. Proctor, 125 U. S. 136 (1888) 17

Timolat v. Franklyn, 122 Fed. 69 (C. C. A. 2) 6

Tuttle v. Claflin, 76 Fed. 227 19

U. S. Frumentum v. Lauhoff, 216 Fed. 610 (C. C. A. 6) .11-12

U. S. v. Societe, 224 U. S. 309 .....11, 21

Westinghouse Co. v. Wagner Mfg. Co., 225 U. S. 604..18, 21

Winans v. Denmead, 15 How. 330 11

Rules and Statutes.

Federal Rules of Civil Procedure (28 U. S. C. A., foll. Sec. 723c):

Rule 8(c) 9

Rule 52 4

Rule 52(a) 31

Rule 53(e) (2) 22, 28, 31

Rule 75(d) 14

R. S. 4884 (35 U. S. C. A. 40) 10

R. S. 4921 (35 U. S. C. A. 70) 10, 12

In the Supreme Court of the United States

OCTOBER TERM, 1942.

Nos. 945, 946.

FORD MOTOR COMPANY,
Petitioner,

vs.

THE GORDON FORM LATHE COMPANY,
Respondent.

BRIEF OF RESPONDENT,
THE GORDON FORM LATHE COMPANY,
In Opposition to the Petition for a Writ of Certiorari of The Ford Motor Company.

Statement: The Court of Appeals for the Sixth Circuit affirmed the findings and conclusions of the Special Master on the accounting in all respects (133 Fed. (2) 487; R. Vol. V, pp. 2-26). The District Court adopted the findings and conclusions of the Report of the Master on the profits and damages following the judgment against the petitioner here, for the infringement of a patent owned by respondent, The Gordon Form Lathe Company, in all respects except one. The infringement in this case was colossal. It extended from June 16, 1925 to March of 1931. During that period of time the defendant turned on the infringing machines 3,420,166 T model camshafts, 4,306,504 A model camshafts, and 275,664 tractor camshafts. There were 8 cams on each shaft, making a total of 8,002,334 camshafts turned. The Master found that the defendant's profits on this infringement amounted to $206,824.22 (T. R.

93). The District Court eliminated the overhead item from these profits. The Circuit Court of Appeals affirmed the Master's findings in all respects and stated (133 F. 2d 493):

> "The finding of the Master that the Ford Company enjoyed a savings from its infringement of the Gordon patent is supported by the overwhelming weight of the evidence."

The petitioner seeks a review of many points in which the Master, the District Court and the Court of Appeals have been in agreement. The respondent opposes the petition on each of the grounds advanced by the petitioner.

The respondent respectfully points out the reasons why, in its opinion, the present petition should be denied:

1. There is no diversity of decision between the Courts of Appeals below on any of the questions presented in this petition. *Keller v. Adams*, 264 U. S. 311, 314; *Layne v. Western Well*, 261 U. S. 387, 393.

3. There is uniformity of decision with the prior decisions of this Court and with the prior decisions of the Circuit Courts of Appeals following such decisions on the questions presented by this petition.

3. There is no diversity of decision between the Circuit Court of Appeals in the Sixth Circuit and the Special Master who heard and saw the witnesses. On the contrary the two are in accord.

4. No question of public interest is involved; petitioner shows no other case in which any of the alleged questions are involved. On this record the interest is limited to the litigants.

5. This is the last of the suits on this patent; the patent is expired; everybody but this defendant settled after the first case. The litigation having reached the accounting phase is no longer subject to the rules governing patents and the litigation and the questions here involved

are therefore not confined to one circuit as in the *Schriber-Schroth* case.

6. Several of the questions presented to this Court were belatedly brought into the case by petitioner.

7. The specific questions presented to this Court were all ruled upon by each of the courts below.

While this Court undoubtedly has jurisdiction and the right to grant Petitions for Certiorari, this Court has said that it would not take up cases to settle principles important to the parties but unimportant to the public. Thus in *Layne and Bowler Corporation v. Western Well Works*, 261 U. S. 387, the Court said (p. 393):

> "If it be suggested that as much effort and time as we have given to the consideration of the alleged conflict would have enabled us to dispose of the case before us on the merits, the answer is that it is very important that we be consistent in not granting the writ of certiorari except in cases involving principles the settlement of which is of importance to the public as distinguished from that of the parties, and in cases where there is a real and embarrassing conflict of opinion and authority between the circuit courts of appeal."

This Court has also said that it would not grant certiorari to review concurring decisions below. The Special Master and the Circuit Court of Appeals concurred in every finding and every conclusion, and the District Court adopted all of the findings and conclusions of the Special Master except one. All but one of the points made by petitioner insofar as they were presented to the Courts below are from findings and conclusions each of which are concurring in all respects. In *General Pictures v. Electric*, 304 U. S. 175 this Court said (pp. 178-179):

> "Moreover, the decision on that point rests on concurrent findings. They are not to be disturbed unless plainly without support. *United States v. Chemical Foundation*, 272 U. S. 1, 14. *United States v. Mc-*

Gowan, 290 U. S. 592. *Alabama Power Co. v. Ickes,* 302 U. S. 464. There is evidence to support them. Nor would the writ be granted to review the questions of anticipation and invention that petitioner argues, for as to them there is no conflict between decisions of circuit courts of appeals. *Layne & Bowler Corp. v. Western Well Works,* 261 U. S. 387, 393. *Keller v. Adams-Campbell Co.,* 264 U. S. 314, 319-320. Cf. *Stilz v. United States,* 269 U. S. 144, 147-148."

The rule of respect for concurring decisions of courts below and (the special master who saw and heard the witnesses) announced a long time ago by this Court in *Adamson v. Gilliland,* 242 U. S. 350 has now been given the force of law under Rule 52 of the Federal Rules of Civil Procedure.

Summary of the Matter Involved: Petitioner's statement (pages 2-9 of the petition) of the prior litigation of the patent is generally correct although incomplete and colored with self-serving statements and partisanship.

The following statement is made to briefly supplement the statement of petitioner. During this period several other suits were begun for infringement of the patent, these were settled by agreement of the parties. Almost the entire automobile industry adopted and began using the Gordon invention as soon as its value became known. There was an abandonment of the prior methods and machines used to cut cams on the automobile engine cam shafts. The cam shafts in question are those that open and close the exhaust and intake valves of the engine and the cams are positioned so that each valve will open in timed relation to the piston within the engine cylinder and in proper sequence with the valves in the other cylinders. The machines of the invention cut all of the cams on the camshaft in a simultaneous cutting operation. With the exception of the petitioner the automobile industry recognized the value of the invention by requesting licenses to use the invention.

On pages 5 and 6 of the petition, petitioner incorrectly says respondent kept from the court information concerning the petitioner's use of the camshaft shaper for making camshafts; and petitioner concludes that because of this fact the Circuit Court of Appeals held the patent to be a pioneer patent (32 F. 2d 55). The fact is that the Ford camshaper was referred to in the first litigation under the Gordon patent (*Melling v. Gordon Form Lathe Co.*, 14 F. 2d 437) to all of which the attention of defendant has been frequently called and is therefore well known to defendant. In that suit proof was offered concerning that Ford camshaper and how it worked. This testimony was read into the record in the instant case (T. R. 292-296). That testimony was given in 1926. The fact is also that others engaged in the industry knew that the Ford Company was using Ford camshapers (T. R. 303) and Jones, of the White Motor Company, saw them in operation in the Ford plant in 1926 (T. R. 301). When the instant case was tried on the merits, the Ford camshaper and its operations were described at length; and the court below in sustaining Gordon's patent stated (87 F. 2d 390, 391):

> "Even brief discussion of all the asserted new prior art in the present record would unduly extend this opinion. Full consideration thereof brings conviction of its insufficiency to warrant modification of our previous conclusion that the patentees were pioneers in disclosing means for oscillating the tool in synchronism with its reciprocatory movements and the revolution of the work by the use of an appropriately shaped cam, moveable frame, and bell crank lever tool support for use in cutting nongeometric forms and that the Walcott machine is an infringement."

The petitioner implies (page 6) that there was undue delay in starting this suit. The patent in suit issued June 16, 1925. The *Gordon v. Walcott* suit was begun in July, 1926 just a little over one year later, for infringement of

the patent in suit. The *Walcott* suit was decided by the Sixth Circuit Court of Appeals, April 12, 1929. Without including the time allotted for a writ of certiorari, the present suit was begun in about one and one-half years. The *Walcott* suit was a test case for respondent. The law has been firmly settled that the prosecution of a test suit is a proper defense against the charge of laches. As stated by Judge La Combe in *Timolat v. Franklyn,* 122 Fed. 69 (C. C. A. 2) at page 69:

> "They were under no obligation to sue everyone at the same time."

The decision of the Circuit Court of Appeals sustaining the Gordon patent as against Melling (*Gordon Form Lathe Co. v. Walcott Machine Co.,* 32 F. 2d 55) was handed down April 12, 1929. On June 12, 1929, Gordon forwarded a copy of that decision to the Ford Motor Company (T. R. 1684-1686), calling defendant's attention to its infringement, and prior notice of infringement to defendant given under date of July 1, 1925, and offering to settle with defendant. Before this action was commenced Gordon wired Ford (T. R. 1525) with respect to commencement of an action, and proposing a conference with Ford's attorneys to discuss possibilities of settlement. On this issue the Master found (T. R. 82):

> "However, by and large, the plaintiff has taken the normal course in enforcing its patent rights. It first sued the manufacturer of the infringing machines and, after getting a decree against it, sued the user of the machines."

The lower courts and the Master were in agreement on the standard of comparison and petitioner complains (page 6) because they all approved the Landis grinder as a standard of comparison on tractor cam shafts prior to the machine of the patent.

In its plant before the infringement, the petitioner had two cam cutting machines more successful than the rest,

the Landis grinder and the Ford shaper. It used the shaper in making the model T camshafts and the Master ruled, that it could have been adapted to the Model A shafts, which were not made until after the beginning of the infringement. Accordingly the Master held the shaper a proper standard of comparison for the Model A shafts. While the petitioner had both the shaper and the Landis grinder in its plant, it chose the Landis grinder to cut the tractor cam shafts. It urges here that the shaper is the proper standard of comparison despite the fact that when it was confronted with a choice it chose the Landis grinder. A company as successful as petitioner never used an inferior machine when a better one was available. There is a sound basis for the ruling of the Master, adopted and affirmed by the courts that the Landis grinder was the proper standard of comparison for the tractor camshafts.

The Master's finding on this specific question (T. R. 35) is to the effect that while the modified shaper was feasible for the tremendous Model A production of the defendant, the defendant's own witnesses testified that at no time did tractor production become great enough or its future sufficiently certain to justify the construction of a special shaper for them. The Master points out that a good deal of work beyond Oberhofken's rough sketches would have been necessary before blue-prints could have been completed and the machines ordered; and that these machines would no doubt have been considerably more expensive than the Model T shapers and it would have been difficult to find a use for them if tractor production were discontinued, since the shaper is inherently not an adaptable type of machine.

The straightening operation (page 7) resolves itself into a question of fact. The Master said on page 41 of the record:

> "independent expert witnesses testified that straightening the shaft before machining the cams was always

considered the proper practice with all types of machine * * *. Furthermore, it appears that the standard of workmanship was raised from time to time; * * *.

The conclusions I draw from this and other evidence not detailed here is that while the use of the Walcott lathes may have been the occasion for adding the straightening operation it was not the underlying cause for doing so, the operation being rather attributable to improvement in defendant's standards of workmanship."

On questions of fact, the Master should be affirmed, especially where both sides presented so much evidence on the question. As was stated by Mr. Justice Cardozo in *Duplate v. Triplex*, 298 U. S. 448, 450:

"The finding by the Master in that regard was approved by the District Court and later by the Court of Appeals. It will be accepted as a datum here."

Petitioner complains on pp. 7 and 8 that no apportionment was granted to it in this case. The Master found that defendant's evidence on this issue consisted wholly of expert testimony to the effect that 100% of the value of the infringing machine was attributable to the Melling improvements (T. R. 70). The Master's finding denying apportionment was concurred in by the District Court and the Circuit Court of Appeals. The Circuit Court of Appeals stated (133 F. 2d 494):

"But the Gordon Company having shown the commingling of profits by the Ford Company, and it appearing that the latter company failed to keep records or to supply evidence that would disclose what proportion of the profits arose from the infringing devices and what proportion, if any, from Melling's improvements, the burden again returned to the Ford Company, which it has failed to carry, and such failure creates an unavoidable liability."

The petitioner seeks the benefits and advantages received by the licensees (page 9) where it says the reasonably royalty is too high. It does not say that it was aware of the licenses at the time they were made and that this petitioner stood mute.

Jurisdiction: The cases presented by petitioner to sustain this Court's jurisdiction to issue the Writ of Certiorari disclose that in both the *Muncie Gear Works v. Outboard Marine & Mfg. Co.*, 315 U. S. 759 and *Exhibit Supply Co. v. Ace Patents Corp.*, 315 U. S. 126, the patent in the instant litigation was confined to a single circuit in addition to the important questions; in *Morton Salt Co. v. G. S. Suppiger*, 314 U. S. 488 and *Lincoln Engineering v. Stewart Warner Corp.*, 303 U. S. 546, there was a conflict of decision which is a jurisdictional ground in cases presented to this Court; *Mishawaka Rubber & Woolen Mfg. Co. v. Kresge Co.*, 316 U. S. 203, a trade mark accounting question the opinion of the Court was silent on the reasons for granting the Writ.

PETITIONER'S QUESTIONS PRESENTED.

(1)

(a) This question was not pleaded as it must be (Federal Rules of Civil Procedure, Rule 8(c)) and is, therefore, waived.

(b) There being no issue, there is no evidence except the decree itself which disproves defendant's contentions.

(c) None of the three tribunals agrees with defendant's contentions; insofar as it was presented to any, each disagrees with defendant; the comments of the Court of Appeals were dicta; the comments of the Master decide it against defendant.

(d) Defendant's contention is contrary to the decisions of this Court (*Bigelow v. Old Dominion*, 225 U. S. 111,

132; *Birdsell v. Shalliol*, 112 U. S. 485; *Lovejoy v. Murray*, 3 Wall. 1; *Sessions v. Johnson*, 95 U. S. 347; *Corsicana Nat. Bank v. Johnson*, 251 U. S. 68, 84). No decision of any Court supports defendant's claims.

(e) The question is particular and local to the parties; as presented by defendant it is predicated on the simultaneous occurrence of eight events which have not occurred simultaneously in a hundred years, do not occur simultaneously here and, no doubt, will never occur simultaneously.

(f) Defendant's claims are contrary to the statutory rights of the patentee since the statute grants the patentee the right to recover from the user as well as from the maker (R. S. 4884 and R. S. 4921, Title 35, Secs. 40 and 70).

(g) There never was any satisfaction for the use of the defendant's machines and never any waiver of the patentee's rights to collect for the infringing use and all three tribunals below so held.

(2)

This is a question of fact decided against defendant by all three tribunals below; it is local to this case.

(3)

Here a question of fact is presented; all three tribunals below decided it against defendant; it is local to this case; defendant's advantages, savings, gains and profits were due to the use of the invention of the patent in suit, as all three tribunals below held. Gordon's invention is a pioneer invention; his first embodiment of his invention was not as efficient as later embodiments, such as defendant used (*Hildreth v. Mastoras*, 257 U. S. 27, 30, 34). That is true of all pioneer inventions and all three tribunals below correctly held that Gordon is not limited to the particular embodiment shown in his patent, holdings consistent

with rulings of this Court ancient and current (*U. S. v. Societe,* 224 U. S. 309; *Winans v. Denmead,* 15 How. 330).

(4)

The patented machine was successful throughout, as all the tribunals have held; the machine used by defendant in infringement was one of the patented machines. The embodiment of the patented machine illustrated in the patent in suit was designed for a particular type of cam; that in the infringing machine for a variant cam. Both embodied the Gordon invention. Both were successful commercially. Every invention—especially every pioneer invention—is embodied in variant machines for variant products. That is one of the merits of a pioneer invention. All three tribunals below were in concord in following this Court's rulings on apportionment.

(6)

This question is one of fact. The Master found that the petitioner gained advantages in overhead by the use of the infringing machines; and the Master found as a fact the amount of the overhead savings arising from the use of these machines. The Court of Appeals concurred in and approved this finding of fact of the Master. This issue is distinctly local to this case.

(5) and (7)

Here are presented questions of fact local to this case and decided adversely to petitioner's contention in all the Courts below. Not only does the proof show that the patentee was damaged, but that the value of the invention claimed in this accounting by defendant was inadequate.

If, in these premises, the law is important, it is that damage to a patentee even when not proved, is presumed (*A. T. & T. vs. Radio,* 5 Fed. (2) 535; *U. S. Frumentum*

vs. Lauhoff, 216 Fed. 610, 623, C. C. A. 6), and that a license to make and sell is not a measure for a license to use (*Dowagiac v. Deere & Webber*, 284 Fed. 331, 340 (C. C. A. 8)), nor satisfy the provision of the statute (Title 35, Section 70) relating to an injunction against future use (*The Suffolk Mfg. Co. v. Hayden*, 3 Wall. 315, 320).

ARGUMENT.

The points upon which petitioner relies, and which it claims it will urge if a writ of certiorari is allowed by this Court, all involve issues of fact which were resolved against the petitioner by the Master to whom this case was referred, and by the District Court (save only as to the issue on overhead), and by the Court of Appeals on all issues. In addition to the reasons which respondent has advanced on pages 2 and 3, as to why this Court should not grant a writ of certiorari to petitioner in this case, the respondent briefly summarizes its argument with respect to each of the points upon which petitioner relies.

POINT (1): Respondent made no "compromise agreement" or "deal" with Walcott Machine Company, the infringing manufacturer.

In *Gordon Form Lathe Company v. Walcott Machine Company*, 32 F. (2d) 55 (1929), the Circuit Court of Appeals of the Sixth Circuit found that the machine which the defendant there manufactured and sold, and which the petitioner here used, infringed Gordon. The Court reversed the District Court and remanded the case. Thereafter, proceedings were had in the District Court, resulting in an amended final decree against that company. This amended final decree is set forth at length in the record (R. 1670-1672). Paragraphs (6) and (8) of that amended final decree are:

> "(6) It being represented to the Court that the Defendant is not financially able to respond to a money

judgment for damages and/or profits, no accounting is ordered, but on the contrary it is ordered that the Plaintiff recover of the Defendant nominal damages in the sum of One Dollar ($1.00), without reference to a Master."

"(8) That Plaintiff do recover of the Defendant Four Thousand Dollars ($4,000.00) as its costs in this Court and the Court of Appeals and judgment may be had against the Defendant for such Four Thousand Dollars ($4,000.00)."

Apparently, the petitioner makes the same claim before this Court as it made in the court below, in the District Court, and before the Master, to the effect that the respondent entered into some sort of a compromise agreement with the Walcott Machine Company (the defendant in 32 F. (2d) 55), under the terms of which respondent accepted $1.00 nominal damages and $4,000.00 of costs, in order that the respondent might then proceed against purchasers of the infringing machine and recover large sums of money from these purchasers.

The petitioner did not plead this issue when this case was tried on the merits in the District Court. It was raised for the first time on the hearing before the Master in the accounting matter. The Master who heard this accounting matter well understood this issue. His summarization of petitioner's claim is found on page 81 of the record.

Whether such a compromise agreement was or was not made presented a clear-cut question of fact; and the burden was on the petitioner to prove that such an agreement had been made. Petitioner did not meet this burden. The testimony in the record on this point is undisputed. That testimony (R. 970-971) is to the effect that the amended final decree in the *Walcott* case (R. 1670-1672) was presented by counsel for respondent "*after investigation*"; that counsel was not aware of any settlement "we made with the Walcott Company"; that while there was no

formal bill of costs filed in the *Walcott* case, "we checked our costs quite carefully at the time, and I think they ran quite in excess of that figure of $4,000." On this issue of fact the Master found (R. 82):

> "There is no evidence here to establish that the decree for nominal damages in the *Walcott* case was not based upon the financial condition of the Walcott Company, as recited in the decree. * * * Therefore, even if a defense based on these claims of defendant can be raised at this time, I find and conclude that the defense is not substantiated by the evidence."

The District Court and the Court of Appeals are in accord with this finding.

In the court below, the petitioner (Point 13) of its statement of points to be relied on upon appeal under Rule 75(d)) assigned this finding as error (R. 1376); and the court below affirmed the judgment of the District Court on the petitioner's appeal (see Decree—No. 9123, Vol. V, R. p. 2).

On page 20 of its brief petitioner sets forth an excerpt from the decision of the court below. The Court of Appeals did not discuss this assignment of error at all in its opinion, apparently for the obvious reason that the assignment was without merit. In its recital of the historical background of this litigation, the court below used the language quoted by petitioner on page 20 of its brief (133 F. (2d) 487, 491). This language was a mere recital, not chosen to indicate that the Court of Appeals disapproved the specific finding of the Master concurred in by the District Court, *since the decree of the court below expressly affirmed the Master and the District Court on the petitioner's appeal.*

If, contrary to the recital in the amended decree in the *Walcott* case (32 F. (2d) 55), the Walcott Company was financially able to respond to a money judgment; then it is pertinent to inquire why petitioner did not proceed against

the Walcott Company to recover under the patent guarantee clause given to petitioner when it brought the infringing machines (R. 1610).

Birdsell v. Shaliol, 112 U. S. 485 (1884), which petitioner (p. 20 of its brief) refers to as "the old case," states a rule of the law of torts which is fundamentally sound, and which has been consistently followed. The rule in that case is that if one person is in any case exempt from being sued for damages for using the same machine for the making and selling of which damages had been recovered against and paid by another person, it can only be when actual damages have been paid. The rule is grounded upon the theory that in such a case the plaintiff has been deprived of the same property by the acts of two wrongdoers, and has received full compensation from one of them. That case points out that to say that the mere obtaining judgment for nominal damages vests the property in the defendant would be an absurdity; and that under our law, judgment against one joint trespasser, without full satisfaction, is no bar to a suit against another for the same trespass.

The rule in *Birdsell v. Shaliol, supra,* is grounded on *Lovejoy v. Murray,* 3 Wall. 1. *Lovejoy v. Murray* was followed and applied in *Bigelow v. Old Dominion Copper Co.,* 225 U. S. 111, 132 (1912).

In many respects the instant litigation almost parallels the litigation in *Birdsell v. Shaliol, supra.* In that case Birdsell, the patentee, granted a license to a company of his own, the Birdsell Manufacturing Company, to make, vend, and use the invention. Birdsell *individually* brought an action against the Ashland Machine Company for infringement of his patent. In that suit the Birdsell Manufacturing Company was not made a party; but a perpetual injunction was decreed, and the case was referred to a Master, who reported that the defendant had made no

profits for which it should account, and that if any damages had been sustained, they had been sustained by the Birdsell Manufacturing Company, and that Birdsell was entitled to recover only $1.00 as nominal damages. The Ashland Machine Company afterwards, pending that suit, became insolvent; and a decree was rendered in Birdsell's favor for nominal damages, and for costs, which were paid by that company. *Thereafter,* Birdsell and the Birdsell Manufacturing Company sued Shaliol *et al.,* the user of one of the machines made by the Ashland Machine Company. *It was in this latter suit that this Court held that the nominal damages decreed in the former action, to which Birdsell was a party, did not prevent recovery as against the user of the machines.*

As far as petitioner's Point (1) is concerned, this fact issue was resolved against it by the Master; and the Master's finding was concurred in by the District Court and the Court of Appeals. The situation thus presented does not admit of the issuance of a writ by this Court for the sole purposes of reviewing this finding of fact which rests on undisputed testimony. There is no diversity of decision between the Master, the District Court, and the Court of Appeals on this fact question.

POINT (2): The Master resolved the issue of fact on the "straightening operation" against petitioner; and the District Court and the Circuit Court of Appeals approved and accepted the Master's finding.

The real substance of petitioner's Point (2) is that it claims a deduction from its infringing profits for the use of a straightening operation which it claims was added at the time that it began to use the infringing machines. The Court below discusses this issue at length (133 F. (2d) 487, 498), and refers to the Master's finding with respect to this straightening operation, and points out that the Master

found that (133 F. (2d) 487, 498) "the additional operation was not attributable to the difference between the use of the infringing machines and the shaper."

On page 24 of its brief, the petitioner only sets forth a part of the findings of the Master on this point. The Master made the following express finding (R. 41) which immediately precedes that quoted by the petitioner:

> "The conclusion I draw from this and other evidence not detailed here is that while the use of the Walcott lathes may have been the occasion for adding the straightening operation, it was not the underlying cause for doing so, the operation being rather attributable to improvement in defendant's standards of workmanship. Under the testimony of its own witnesses, defendant could have made the Walcotts exactly like the shapers with regard to the necessity of straightening by simple changes with respect to steady rests, but it preferred instead to adopt the straightening operation, which was undoubtedly the better practice. If the extra straightening operation was in fact attributable to the difference in machines, it is indeed difficult to see why the defendant upon discovery of that fact did not reject the Walcott machines instead of buying more and then discarding the shapers."

The rule is that where a deduction is claimed from infringing profits by the infringer, if the deduction is not explained in a satisfactory way, the Master does right in rejecting it.

Elizabeth v. Pavement Co., 97 U. S. 126, 142.

The position of petitioner to the effect that it must be granted the cost of this straightening operation under the rule of *Tilghman v. Proctor*, 125 U. S. 136 (1888), is without merit. That case does not hold that where an infringing defendant adds another operation in the manufacture of its product on the infringing machine, the cost of that added operation is a deduction from its infringing profits, *if, as here, that added operation did not result from the use of*

the infringing machine, but, as the Master found, was attributable rather to improvement in the defendant's standards of workmanship.

What the Master found was that the defendant was putting out a better camshaft, and it added a straightening operation to do this. *This cost was not attributable to the use of the infringing machine, as the Master expressly found.* This finding of the Master was concurred in by the District Court and by the Court below. Here again there is no diversity of decision between the Master, the District Court, and the Court of Appeals on this fact question.

Petitioner's request that this Court issue its writ of certiorari to review this finding of fact should be denied.

POINT (3): The Master resolved the fact issue of apportionment against petitioner; and the District Court and the Court of Appeals approved and accepted this finding.

The Court of Appeals discusses this issue of apportionment at length (133 F. (2d) 487, 492, 493, 494), and states (p. 493) that Gordon's patent was generic; that Gordon and Redlin taught and gave to the industry a new method for shaping camshafts, which contributed substantially to the mass production of automobile engines. The Court points out that there is such a thing as second-hand improvements; and (133 F. (2d) 487, 493) that while Melling was working to improve Gordon's machine and was successful, Melling's accomplishment was not a creation and was not sufficiently different from Gordon to say that the fruit of Melling's mechanical tree was the only fruit that the Ford Company gathered; and that "Melling's improvements were not grafts on Gordon's patent tree, but only a limb upon it." The Court below referred to the decision of this Court in *Westinghouse Co. v. Wagner Mfg. Co.*, 225 U. S. 604, and quoted the confusion rule as stated by this Court in that case.

The respondent's position on this apportionment issue was two-fold:

(1) That this case was not one permitting apportionment because Gordon's patent was generic, and the alleged improvements made by Melling (even though patented) were held to infringe Gordon, and to be the mechanical equivalent of Gordon. Hence the alleged improvements were within the inhibited field of the patent, and that those alleged improvements gave no rise to a claim for apportionment in a legal sense.

Christensen v. National Brake and Electric Co., 10 F. (2d) 856, 866;
Flat Slab Patents Co. v. Turner, 285 Fed. 257, 282;
Tuttle v. Claflin, 76 Fed. 227, 234.

(2) Gordon's patent had been held generic, and Melling's alleged improvement had been held to infringe Gordon, and to be but the mechanical equivalent of Gordon. Gordon's invention gave value to the whole combination; and that if the Melling machine were stripped of the parts held to infringe Gordon, what would remain of the Melling machine would not constitute an operable unit. Since respondent proved that petitioner made tremendous profits by reason of the use of the infringing machine, the burden rested on petitioner to apportion (if apportionment were proper) and to offer proof which would enable the Master to determine what part, if any, of these profits were attributable to Melling.

The Master well understood the apportionment issue; he discussed it at length (R. 60-71). In his report he states that he does not find it necessary to determine the issue as to whether the Ford Company, as a matter of law, was entitled to an apportionment. *He finds that even if the right to apportionment is recognized, it is impossible to apportion on the proof offered, and that the burden was on Ford to ap-*

portion (R. 69). His finding is that Ford's evidence on the issue consisted almost wholly of expert testimony that one hundred per cent of the value of the infringing machines to the defendant was attributable to the Melling improvements; and he expressly finds (R. 71) that the impossibility of separating the profits sufficiently appears to impose the burden on the defendant, and that resort to the books of the defendant would be of no assistance on the issue; and that the respondent was entitled to all the infringing profits.

This finding of the Master was concurred in by the District Court, and by the Court of Appeals. The Court below thus states (133 F. (2d) 487, 494):

> "* * * The Gordon Company having shown the commingling of profits by the Ford Company, and it appearing that the latter company failed to keep records or to supply evidence that would disclose what proportion of the profits arose from the infringing devices and what proportion, if any, from Melling's improvements, the burden again returned to the Ford Company which it has failed to carry and such failure creates an unavoidable liability."

Mason v. Graham, 90 U. S. 261, does not offer petitioner any support on the issue of apportionment. In that case the Court was able to find and to segregate the saving resulting from the use of the improvement. In the instant case, the Master, the District Court, and the Circuit Court of Appeals found that there was such a commingling of profits that no such finding was possible.

The Master summarized his finding on this issue (R. 71):

> "Consequently, I conclude that the plaintiff is entitled to all the profits; as between that alternative and allowing the plaintiff none, that is the fairer result."

There is no conflict between the decision of the Court of Appeals on that issue and *Dowagiac Mfg. Co. v. Minne-*

sota Moline Plow Company, 235 U. S. 641, *Mason v. Graham*, 90 U. S. 261, *Westinghouse Co. v. Wagner Mfg. Co.*, 225 U. S. 604, and *Sheldon v. Metro-Goldwyn Corp.*, 309 U. S. 390. *In some of those cases proof was offered by the party upon whom the burden of proof rested, justifying the claim of apportionment, and fixing the amount of the profits not attributable to infringement.* As the Master pointed out (R. 70), in this case there was no such helpful proof offered. Here again there is no diversity of decision between the Master, the District Court, and the Court of Appeals on this fact question.

Petitioner's request for the issuance of a writ of certiorari to review the finding on this fact issue of apportionment should be denied.

POINT (4): Melling's patent 1,634,550 infringed Gordon.

Petitioner's point seems to rest on its claim that in the above patent a straight line up and down movement of the tool was substituted for the tool tilting movement found by the Court of Appeals to constitute the gist of the Gordon invention; and that from this it follows that the tilting movement of the tool was not necessary or essential to the successful operation of the infringing machines. *The difficulty with this position of the petitioner is that the Master found that the modified Melling machine made under this patent infringed Gordon* (R. 24). *The Master pointed out that this same conclusion was reached by petitioner's chief tool designer after inspecting this so-called "parallel head Walcott" in 1929.*

The Court of Appeals held Gordon's invention was a pioneer invention, the Gordon patent a generic patent, and the claims were entitled to a wide range of equivalents. Hence only the question of infringement of this patent 1,634,550 remained to be decided in the accounting matter. Under such circumstances, the infringement question was solely a question of fact.

U. S. v. Societe, 224 U. S. 309, 322.

The Court of Appeals discussed this issue at length (133 F. (2d) 487, 495, 496); and under Rule 53 (e) (2), 28 U. S. C. A., foll. § 723c, expressly confirms the findings of the Master supported by the Trial Judge.

Here again there is no diversity of decision between the Master, the District Court, and the Court of Appeals on this fact question.

The petitioner's request for a writ of certiorari of this Court to review this finding of fact should be denied.

POINT (5): Petitioner unlawfully used Gordon's invention.

The Master, the District Court, and the Court of Appeals found that the Ford Company made profits from the use of the infringing machine. The Court of Appeals held in *Gordon Form Lathe Company v. Walcott Machine Company* (32 F. (2d) 55, 61), that this same machine which petitioner used infringed Gordon's patent, the Court holding that infringing machine accomplished the same result as Gordon by the employment of substantially the same means or their equivalents, operating in substantially the same manner. Melling's conception, therefore, under the patent law (as embodied in the infringing machines), and Gordon's conception were one and the same thing.

Machine Co. v. Murphy, 97 U. S. 120, 125.

The Master discussed the matter of this royalty referred to by petitioner on page 31 of its brief; and the Master finds that the 10% royalty paid by the respondent to a company in which Gordon had a large financial interest in a large measure amounted to a transfer of money from one pocket to another. The Master also found that the royalties thus paid were paid *by* the respondent and not *to* the respondent.

The Master rejected this 10% payment as being of no evidentiary value in determining a reasonable royalty. The District Court approved this finding as did the Court of Appeals. That Court discussed the question of reasonable royalty (133 F. (2d) 487, 500, 501); and states that the Master's findings are based upon evidence and inferences reasonably drawn; and since the Master's findings were approved by the District Court, they were accepted by the Court of Appeals in the absence of clearly recognized mistake.

Here again there is no diversity of decision on this fact question between the Master, the District Court, and the Court of Appeals.

The District Court and the Court of Appeals sustained the Master's finding of reasonable royalty of $5,000.00 per machine, the Court of Appeals expressly stating that such result has support in the evidence; and that it does full justice to the Gordon Company. In arriving at his finding of fact on this matter, the Master had the advantage of knowing that the infringing profits received by the petitioner exceeded the reasonable royalty awarded. Under all the authorities the fact of the receipt of these profits was evidence bearing upon reasonable royalty. There was substantial evidence bearing on reasonable royalty which would sustain a royalty of 6¢ a shaft, which would have amounted to over $400,000.

The Master found a reasonable royalty of $120,000 for petitioner's use of the infringing machines. The Master's conclusion on this point is (R. 80) to the effect that the plaintiff and defendant would have come to an agreement to pay $120,000 at the time if the defendant had recognized the Walcott machines as infringing Gordon's patent.

Here again there is no diversity of decision between the Master, the District Court, and the Court of Appeals on this fact question.

Petitioner's application for a writ of certiorari to review this finding of fact should be denied.

POINT (6): The respondent effected and retained considerable overhead savings by reason of the use of the infringing machines.

On pages 33 to 37 of its brief, the petitioner takes the position that respondent is not entitled to recover any overhead savings which the petitioner effected and retained by reason of the use of the infringing machines. Petitioner's position on this issue is the same before this Court as it was before the Master, the District Court, and the Court of Appeals. That position, when properly analyzed, is that overhead never represents anything but inevitable expense; and that for some unknown reason, where that expense is reduced by the use of the infringing machines, thus effecting a saving, the patent owner is not entitled to recover this saving.

This issue on overhead was discussed very thoroughly by the Master (R. 47-59). The evidence was overwhelming that by the use of the infringing machines, the petitioner was able to turn out more camshafts per man hour of operation than was possible by the use of any of its standards of comparison. This meant that the petitioner made a saving in direct labor costs. The Master found that this direct labor saving was only part of the savings—that there were also other savings in overhead. The Master found the amount of these overhead savings and awarded them to the respondent.

The Court below in a footnote (133 F. (2d) 487, 499) listed thirty-one separate items of overhead, being the petitioner's breakdown of overhead items. *The Master found that this breakdown of overhead items constituted petitioner's breakdown at the time of the trial* (which was long after the period of infringement), *the Master expressly finding* (R. 48) *that the records showing the breakdown of*

departmental overhead in its component elements for the accounting period have been destroyed, although total departmental overhead figures are available.

The Master (R. 51, 52) found from the evidence that overhead expenditures were rather dealt with generally in broad classes; and that each class is apportioned between the infringing and non-infringing branches of the business on some recognized accounting basis, such as proportionate direct labor costs. The Master also found that on occasions when it was necessary for the petitioner to determine the cost of operations in producing a part, petitioner's department's ratios of burden to direct labor costs were used to apportion burden among the operations (R. 47).

The respondent in this case took the position that it was entitled to recover all of the savings realized by petitioner through the use of the infringing machines; and that a part of these savings was represented by savings in overhead. It offered considerable evidence on this issue, and it maintained that since petitioner had not preserved its records with respect to its savings in the various overhead items resulting from the use of the infringing machines, the Master was entitled to use the same method of determining overhead and resultant overhead savings, as the petitioner itself used in its own accounting; and that those savings were correctly found by applying the petitioner's departmental overhead percentage rates to the direct labor saving resulting from the use of the infringing machines.

The Master found (R. 49) that there was a saving on the use of the infringing machine with respect to factory supervision (R. 53), employees' liability and compensation insurance, timekeeping, pay roll, and clerical salaries (R. 53), power costs (R. 54), machine depreciation, machine maintenance and repair, cutting tool costs (R. 54, 55, 56), and overhaul costs (R. 55, 56). Summarizing his finding on the overhead savings, the Master says (R. 57):

"It would seem unfair, however, to ignore overhead savings, *since it seems reasonably clear that substantial savings in those costs were realized by defendant in using the Walcott lathe in place of the shaper on Model T and A production.* While it is recognized that application of general ratios of overhead to direct labor costs would lead to unfair results in many cases, I believe an analysis of the evidence here indicates that with the shaper and Walcott machines overhead costs by and large would vary in proportion to direct labor. While some of the elements of overhead would vary little, if at all, these static costs are offset by some elements (e.g., depreciation and cutting tool costs) which would probably increase with the substitution of the shapers for the Walcotts in a greater proportion than direct labor. I therefore adopt the method of computing overhead costs for these two machines by using the departmental percentages. I think this treatment is in line with the cases on the treatment of overhead in patent accountings, and also with the practice of cost accountants to apportion manufacturing burden on a direct labor basis where a more precise method is not feasible. It is to be observed that this method takes into consideration the increased depreciation and maintenance costs of the Model A shaper, since the reduction in speed for that form of shaper increases the overhead costs thus calculated, and since, moreover, the departmental overhead percentages ran considerably higher for Model A and Model T production."

This finding of the Master was rejected by the District Court. The District Court stated (R. 121) that even though he rejected the Master's finding on this overhead issue,

> "I am very frank to say that there are very few things in this case that I approach with that feeling of uncertainty; * * *."

The District Court's reasoning in overruling the Master on this issue was based on the assumption that the petitioner did not raise or decrease the salary of a single executive officer, nor did it change the size of its plant (R.

126) as the result of the discontinuance of the machines it was using prior to the adoption of the infringing machines. The District Court did not disapprove any findings of the Master with respect to the actual savings in specific items of overhead. The District Court gave no consideration to the actual savings in certain overhead items which the Master found had resulted from the use of the infringing machines.

The Court of Appeals discusses this overhead issue at length (133 F. (2d) 487, 499, 500), and holds that the District Court should have sustained the Master on this issue, and reverses the District Court. The Court of Appeals points out that the Master ascertained the savings on overhead expense in the same proportion that direct labor cost and time were reduced by the use of the infringing machines. The Court of Appeals also sustains the Master's finding (133 F. (2d) 487, 500) to the effect that the departmental overhead expense was not increased by the use of the infringing machines; and (p. 500) that the production of the cam roughing operations for the Model T camshaft was increased by the use of the infringing machines over the Ford shapers (the standard of comparison) from fifty to seventy-five shafts per hour, and on the Model A camshafts from thirty-six to sixty (over the most favorable standard of comparison urged by petitioner), and on the tractor camshafts from eight to forty over the Landis grinders, which were actually used to make the tractor shafts before infringement began. The Court of Appeals then points out that the inescapable inference from the facts is that the Ford Company was able with the same overhead organization and with reduced capital expenditure to increase substantially the production of camshafts per hour by the use of the infringing machine, and that (p. 500) it is certain that the petitioner gained an advantage in overhead by the use of the infringing machines and that under settled rules of law, the respondent was

entitled to this saving or advantage measured in money. As the Court of Appeals then points out, the direct labor and time cost method of distribution of manufacturing expense used by the Master is based on the theory that the relationship between manufacturing expense and direct labor cost and time consumed in production are so related that by the use of this method the manufacturing cost will be fairly distributed over the entire output and may be allocated to each item with reasonable certainty, and that this method is widely used by manufacturers and gives very satisfactory results if the percentage is properly predetermined; and that there was no issue raised here as to the correctness of the percentages.

The Court of Appeals further pointed out that, in any event, the Master followed the petitioner's own method of accounting to determine the apportionment of manufacturing overhead, and that while this method may not accurately prove the cost, it is the best approximation that can be made under the evidence. Citing *Duplate Corp. v. Triplex Safety Glass Co.*, 298 U. S. 448.

Here again was a fact question: What overhead savings, if any, were realized by the petitioner through the use of the infringing machines? *The petitioner did not preserve its detailed overhead expense records. It did, however, preserve its departmental percentages for the infringing period.* The Master found that the petitioner made savings in many items of overhead expense. Under Rule 53 (e)(2), 28 U. S. C. A., foll. § 723c, this finding of the Master should have been accepted by the District Court, since it was based upon substantial evidence; and, in any event, it was not clearly erroneous. The Court of Appeals reinstated this finding of the Master, thus correcting the error made by the District Court.

It is rather anomalous for the petitioner to claim that even though it may destroy its primary and detailed records with respect to its overhead expense on the infringing

machines and the prior machines in a patent accounting matter it may not be charged with overhead savings which resulted to it from the use of the infringing machine, when the Master found on the evidence that there were considerable savings in overhead resulting from the use of the infringing machines. No injustice is done to the petitioner when the Master follows the petitioner's own method of accounting in allocating overhead and apportions this item on the percentage of direct labor. Since direct labor on the infringing machines was less than on the standards in each instance, the savings were readily computable.

Petitioner's application to the Court for writ of certiorari to review this finding of fact by the Master, concurred in by the Court of Appeals, should be denied.

POINT (7): The Master found damages of the respondent, by way of reasonable royalty, in the sum of $120,000, which finding was concurred in by the District Court and the Court of Appeals.

Respondent is unable to understand petitioner's argument as to Point (7), pages 37, 38, 39, and 40 of its brief. The Master's finding as to reasonable royalty was that the $120,000 would represent a fair and reasonable royalty for the use of the 24 infringing machines by petitioner (R. 71-80). The District Court approved this finding, as did the Court of Appeals. The Court of Appeals discussed the issue (133 F. (2d) 487, 501) and stated that the Master gave proper weight to all considerations, and that the Master's findings, concurred in by the District Court, would be accepted by the Court of Appeals, in the absence of clearly recognized mistake.

The Master found (R. 93) that the respondent was entitled to its choice of petitioner's infringing profits amounting to $206,824.22; *or* $120,000.00 as respondent's damages. *This finding of the Master was confirmed in its entirety by*

the Court of Appeals in its decree in No. 9122. The Master answers each one of the "conditions precedent" referred to by petitioner on pages 38 to 40 of its brief, and disposes of each of these in a well-reasoned opinion; and his findings are based on the evidence. The Court of Appeals referred to the report of the Master (133 F. (2d) 487, 492) as being "a very able and complete report on the claims of the parties and a thorough discussion of the facts and applicable law."

It has been pointed out heretofore that the petitioner used twenty-four infringing machines; and that it continued to use some of these machines long after the Court of Appeals had held (32 F. (2d) 55) that these particular machines infringed Gordon. The petitioner consistently refused to make any settlement with respondent; and relitigated the question of infringement (87 F. (2d) 390). It had the use of these infringing machines in turning out nearly eight million camshafts; and the Master finds that its profits arising from the use of these infringing machines were in excess of $206,000.

The Master does not award the respondent both profits and damages. The respondent has the choice of the two.

Here again there is no diversity of decision between the Master, the District Court, and the Court of Appeals on this fact question.

This finding of fact of the Master, concurred in by the District Court and the Court of Appeals, affords the petitioner no claim for a writ of certiorari of this Court to review this finding.

CONCLUSION.

Based on the foregoing argument, it is respectfully submitted that on the several points upon which the petitioner seeks review by this Court, the Circuit Court did not err. That Court accepted the findings of the Master in their entirety. These findings were based upon substantial evidence. Under Rule 53 (e) (2), 28 U. S. C. A. foll. Sec. 723c, the District Court should have accepted all of those findings. The Court of Appeals corrected an error made by the District Court in this matter; and accepted the Master's findings, concurred in by the District Court, on all of the other issues raised by the petitioner here and before the Court of Appeals. Under Rule 52 (a), 28 U. S. C. A., foll. Sec. 723(c) the Court of Appeals could not do otherwise than accept the findings of fact of the Master which were accepted by the District Court.

Wherefore, respondent prays that the petitioner's petition be denied; and that on that petition this Court refuse to issue its writ of certiorari.

F. O. Richey,
John W. Michael,
Geo. D. Spohn,
B. D. Watts,
Attorneys for Respondent.

Lecher, Michael, Whyte & Spohn,
Richey & Watts,
Swan, Frye & Hardesty,
Of Counsel for Respondent.

Nos. 49 and 50. FORD MOTOR CO. *v.* GORDON FORM LATHE CO. Certiorari, 319 U. S. 738, to the Circuit Court of Appeals for the Sixth Circuit. Argued November 8, 9, 1943. Decided December 6, 1943. *Per Curiam:* The judgments are affirmed by an equally divided Court. MR. JUSTICE MURPHY took no part in the consideration or decision of these cases. *Mr. I. Joseph Farley,* with whom *Mr. Drury W. Cooper* was on the brief, for petitioner. *Messrs. F. O. Richey* and *George D. Spohn,* with whom *Messrs. John W. Michael* and *B. D. Watts* were on the brief, for respondent. Reported below: 133 F. 2d 487.